Energy-Based Fuel Consumption Model for FREFLO

KETHIREDDIPALLI S. RAO AND RAYMOND A. KRAMMES

CORFLO is a strong tool for evaluating coordinated freeway corridor traffic management strategies because of its capability of explicitly simulating freeways and surface streets within a single environment. The lack of a fuel consumption estimation capability in FREFLO, the freeway simulation component of CORFLO, however, limits its application for evaluating corridor management strategies directed at the much needed conservation of scarce petroleum resources. The objective was to develop and implement a fuel consumption model based on the most currently available fuel consumption data. A review of previous work on fuel consumption modeling indicated that a model based on the energy consumed to overcome the forces resisting a vehicle's motion is suitable for implementation in FREFLO. The relation between acceleration noise and density was used to estimate the acceleration owing to vehicle interaction. The model was calibrated by using fuel consumption data obtained from FHWA; these data are representative for 64 percent of the passenger vehicle fleet from 1980 to 1992. The model explains 99.5 percent of the variation in the constant-speed fuel consumption data and 86.1 percent of the variation in fuel consumption due to acceleration. Air drag and rolling friction coefficients computed from the model parameters were near the lower bounds of the range of theoretically possible values. The fuel consumption estimates obtained from FREFLO and INTRAS for a small segment of I-35 near Austin, Texas, were comparable under most traffic conditions.

The oil shortages of the recent past have increased attention in the United States to the conservation of petroleum resources through better vehicle and road network design and traffic management schemes. The transportation sector is a primary target for conservation efforts because it accounts for 60 percent of the total petroleum consumed, and improved transportation management has significant petroleum conservation potential.

Any attempt to conserve fuel through traffic management schemes requires a means of estimating fuel consumption. A traffic model with a fuel consumption module provides the only practical means of estimating the fuel savings resulting from a particular traffic management strategy (*1*). The use of such a model also facilitates preimplementation evaluation and selection of management strategies for further study and eventual implementation.

TRAF is an integrated system of five traffic simulation models and a traffic assignment model developed by FHWA as a tool for use in transportation planning and traffic engineering to test transportation management strategies. CORFLO is a subset of the TRAF system consisting of FREFLO, NETFLO, and TRAFFIC. FREFLO is a macroscopic freeway simulation model, NETFLO is a macroscopic arterial simulation model, and TRAFFIC is an equilibrium traffic assignment model.

CORFLO is the only available public-domain traffic simulation model that can explicitly simulate freeways and surface streets within a single environment. Hence it has found use in several corridor traffic management studies. Because CORFLO is an integrated system of two simulation models, both models in CORFLO need a fuel consumption submodel to estimate systemwide fuel consumption. Only NETFLO, however, currently has a fuel consumption estimation capability. The lack of a similar capability in FREFLO reduces the efficacy of CORFLO in estimating the fuel savings through implementation of alternative coordinated freeway corridor traffic management strategies.

The main objective of the study documented in this paper was to identify a model that can be used to estimate fuel consumption by using the traffic variables generated by FREFLO, calibrate the model parameters to represent traffic conditions in the United States, incorporate the model into FREFLO logic, and check the accuracy of the estimated fuel values by comparing them with those estimated by INTRAS. INTRAS is a microscopic freeway simulation model designed to represent traffic and traffic control in a freeway and surrounding surface street environment (*2*). The scope of the study is limited to fuel consumption estimates for passenger vehicles only.

First, the background literature related to fuel consumption modeling is summarized. Then, the model implementation is discussed and the results of validation are presented. Finally, a summary and recommendations for further work are presented.

BACKGROUND

Use of Power Generated by an Engine

To understand the fuel consumption characteristics of an automobile, it is necessary to understand the different forces resisting its motion. The power generated by the engine is mainly used in overcoming rolling resistance, air resistance, grade resistance, inertial resistance, curve resistance, and power transmission resistance.

Rolling resistance results from the frictional slip between the tire and pavement surfaces; flexing of tire rubber at the surface of contact; rolling over rough particles (stones or broken asphalt); climbing out of road depressions; pushing wheels through sand, mud, or snow; and internal friction at the wheel, axle, and driveshaft bearings and in transmission gears. For speeds of up to 97 km/hr (60 mph) the rolling resistance per unit weight of modern passenger cars on high-type pavements is nearly constant (*3*).

Air resistance is composed of the direct effect of air in the pathway of vehicles, the frictional force of air passing over the surfaces of the vehicles, and the partial vacuum behind the vehicle. Its magnitude is a function of the frontal area of the vehicle and the square of the vehicle speed.

Texas Transportation Institute, Suite 310, CE/TTI Tower, Texas A&M University, College Station, Tex. 77843.

Grade resistance is the additional resistance a vehicle experiences in traversing grades. It is equal to the component of the vehicle's weight acting along the grade.

Curve resistance is the force acting through the front wheel contact with the pavement needed to deflect the vehicle along a curvilinear path. This force is a function of speed. Curve resistance is not considered in the models described herein.

Inertial resistance is the force that must be overcome to change speed. It is equal to the product of vehicle mass and rate of acceleration.

The power transmission resistance is the frictional resistance offered by the clutch, transmission, driveshaft, differential, and axle and other bearings. The total power loss due to this resistance is approximately 10 percent for an average passenger car with manual transmission in direct drive (*4*).

Apart from the power required to overcome the resisting forces described, in modern passenger vehicles power is also consumed by accessories like the cooling fan, power steering, air conditioner, and alternator. The power requirements to run these accessories also contribute to the overall fuel consumption of the vehicle.

Fuel Consumption Models

The power generated by the engine is a function of engine speed and throttle opening and not the road speed of the vehicle. In most traffic simulation models, however, variables like engine speed and throttle opening are not readily available. Therefore fuel consumption is generally estimated by using vehicle speed and acceleration. In the following paragraphs recent work on fuel consumption modeling is discussed.

A hierarchy of fuel consumption models has been established by Akcelik et al. (*5*); this hierarchy includes models ranging from basic, instantaneous types of models to the more aggregate, average travel speed models. The choice of the fuel consumption estimation function depends on factors including the availability of traffic variable estimates, either modeled or measured on the road, and the required level of accuracy (*1*).

Kent et al. (*6*) showed that the instantaneous fuel consumption can be related to the instantaneous power demand experienced by the vehicle by using a simple linear relation. This model is often referred to as the *power-related* model of fuel consumption in the literature.

Using data collected from carefully controlled on-road acceleration, deceleration, and steady-speed fuel consumption tests, Biggs and Akcelik (*7*) showed that the power model in the form proposed by Kent et al. (*6*) gave adequate estimates of fuel consumption over trip segments of at least 60 sec duration and during cruising and slow to medium accelerations, with mean errors of generally less than 5 percent. During hard acceleration, however, fuel consumption was grossly underestimated, with mean errors of up to 20 percent, depending on the acceleration rate and final speed. Akcelik (*8*) also showed that since the power-related model uses an average (constant) efficiency factor for all modes of driving, its adequacy is limited for predicting fuel consumed in different modes of driving. Therefore this form of the model is unsuitable for fuel estimation if it is used to predict fuel consumption at different speeds and accelerations, irrespective of the mode of driving.

One of the findings of the analysis of the power-related model (*7*) was that the efficiency factor is dependent on the speed and acceleration rate of the vehicle. On the basis of that finding, and also including grade effects, Biggs and Akcelik (*9,10*) proposed a model of the following form:

$$f_x = \frac{\alpha}{v} + \beta_1 R_T + \beta_2 [a_e R_{IG}]_{a_e > 0}, \quad \text{for } R_T > 0 \tag{1}$$

$$f_x = \frac{\alpha}{v}, \quad \text{for } R_T \leq 0$$

where

f_x = fuel consumption per unit distance,
α = idle fuel consumption per unit time,
v = vehicle speed,
R_T = total tractive force required to drive the vehicle ($R_D + R_I + R_G$),
R_D = total drag resistance,
R_I = inertial resistance,
R_G = grade resistance,
$R_{IG} = R_I + R_G$,
$a_e = a + (G/100) * g$,
G = percent grade, and
g = acceleration due to gravity.

This form of the model is often referred to in the literature as the *energy-related* model of fuel consumption.

Biggs and Akcelik (*10*) suggested the calibration of the idle, drag, and efficiency parameters using three different data sets. This method of calibration would result in a model that can estimate the contribution of each energy component to fuel consumption. The calibration of all model parameters on the basis of one data set containing all modes of driving may not result in a model capable of estimating the contribution of each energy component to fuel consumption.

Before the work by Biggs and Akcelik (*10*), Bester (*11*) proposed a model similar to the energy-related model discussed above. Bester's model has two components. The first component estimates fuel consumption at constant speed and is similar to the power-related model.

The second component of Bester's model (*11*) estimates the additional fuel consumption due to vehicle interaction, as shown in Equation 2.

$$F_a = \frac{\beta M_e a}{\eta} \tag{2}$$

where

F_a = additional fuel consumption per unit distance,
β = efficiency factor,
M_e = effective mass, which is a function of engine resistance,
a = acceleration due to vehicle interaction, and
η = driveline efficiency.

The effective mass M_e reflects the increase in the vehicle mass because of the inertia of the engine, wheels, tires, and driveline. Biggs and Akcelik (*10*) argue that the effect of this increase in vehicle mass is reflected in the efficiency parameter, which relates to overall vehicle efficiency, not just engine efficiency.

The method proposed by Bester (*11*) to estimate the acceleration due to vehicle interaction is discussed later.

It is impossible for motorists to drive at a constant speed, although they may wish to do so. The presence of high volumes and the geometric characteristics of the highway often force the motorist to change speed. Montroll and Potts (*12*) showed that these accelerations follow a normal distribution. The standard deviation of these accelerations, which is called *acceleration noise*, gives an indication of the severity of speed changes. Therefore the acceleration due to traffic interaction could be estimated by using acceleration noise.

Acceleration noise has two components: natural noise (σ_n), which can be ascribed to the driver and the road, and the traffic noise (σ_t), which is generated by traffic interactions (*13*). Drew et al. (*14*) showed, assuming a linear speed density relationship, that

$$\sigma_t = \sigma_{tm}\left[1 - 6.75\left(\frac{k}{k_j}\right) + 13.75\left(\frac{k}{k_j}\right)^2 - 6.75\left(\frac{k}{k_j}\right)^3\right] \quad (3)$$

where

σ_t = acceleration noise due to traffic interaction,
σ_{tm} = maximum acceleration noise due to traffic interaction,
k = density, and
k_j = jam density.

Herman et al. (*13*) found that under nearly ideal geometric conditions and no traffic the natural component of acceleration noise σ_n is 0.0976 m/sec^2 (0.32 ft/sec^2). Jones and Potts (*15*) showed that the natural acceleration noise increases for nonideal geometric conditions. Drew et al. (*14*) examined the effectiveness of using acceleration noise as a measure of level of service and found that the maximum acceleration noise due to traffic interaction varied between 0.305 and 0.732 m/sec^2 (1 and 2.4 ft/sec^2), with a few observations greater than 0.732 m/sec^2 (2.4 ft/sec^2).

The total acceleration noise σ is equal to the sum of σ_t and σ_n. The acceleration due to traffic interaction is calculated assuming that the accelerations follow a normal distribution $N(0,\sigma^2)$. The method of calculation can be explained, see Figure 1, which shows the normal probability density function. The shaded area under the curve gives an indication of the proportion of time (or distance) during which the acceleration is between a_1 and a_2. With the band sufficiently narrow, it can be assumed that the acceleration is $(a_1 + a_2)/2$. After the acceleration is estimated, the total fuel consumption can be estimated by adding the constant-speed fuel consumption and the additional fuel consumption due to vehicle interaction. For densities less than one-third jam density, it was found that the additional fuel consumption due to vehicle interaction is negligible (*11*).

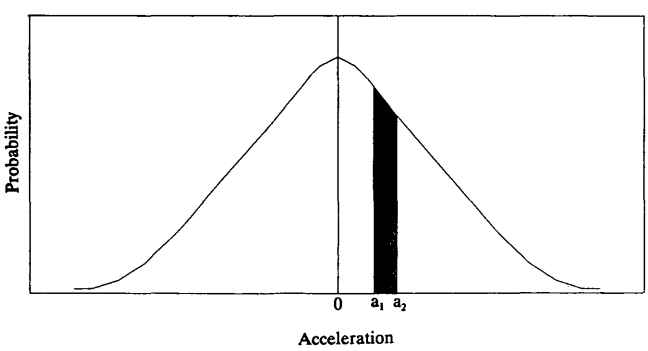

FIGURE 1 Normal probability density function.

MODEL IMPLEMENTATION

The review of previous work on fuel consumption models indicated that a relation of the form shown below is suitable for implementation in FREFLO, considering the traffic variables generated by FREFLO logic and the available fuel consumption data.

$$F_x = P_1 + \frac{P_2}{V} + P_3V^2 + P_4a_e + P_5[a_e^2]_{a_e>0} \quad (4)$$

If the expression $P_1 + P_3V^2 + P_4a_e$ is negative, then

$$F_x = \frac{P_2}{V} \quad (5)$$

where

F_x = fuel consumption per unit distance;
V = average speed;
a_e = effective acceleration;
P_1, P_3, P_4 = constants derived from the rolling, air, and effective inertial resistances, respectively;
P_2 = a constant related to idle fuel consumption; and
P_5 = a constant related to the product of inertial energy and acceleration.

Acceleration noise, which is a function of link density, was used to approximate the acceleration due to vehicle interaction because FREFLO does not generate information on the instantaneous acceleration of individual vehicles. Density is one of the measures of effectiveness generated by FREFLO.

The fuel consumption data used for calibrating the parameters in Equations 4 and 5 are based on the results of a study by McGill (*16*) and are the most recently available data. The vehicles used for the study are representative of 64 percent of the 1980 to 1992 passenger vehicle fleet, which includes pickup trucks. The test vehicles were selected on the basis of an exhaustive study by FHWA, resulting in passenger vehicle fleet projections up to 1992 (*17*). The results of McGill's study (*16*) include tables and graphs that relate fuel consumption and emissions to vehicle speed and acceleration. From the results of that study FHWA is currently updating fuel consumption and emissions estimation algorithms in traffic models including NETSIM and TRANSYT-7F.

As mentioned earlier fuel consumption is a function of engine speed and throttle opening and not on-road vehicle speed. Therefore fuel consumption was related to engine speed and throttle opening in one data base, and in a second data base engine speed and throttle opening were related to the on-road vehicle speed and acceleration. The two data bases were then merged to produce the final tables and graphs that relate fuel consumption to vehicle speed and acceleration.

The proportion of the vehicle population represented by each test vehicle was used by FHWA to combine the individual fuel consumption tables and generate a composite fuel consumption table that is representative of the vehicle fleet in the United States. The percentages represent the 1985 vehicle fleet.

The composite fuel consumption table obtained from FHWA was used to compute fuel consumption in gallons per mile at

different speeds and accelerations. Perhaps because the fuel consumption rates of vehicles with different operating ranges were combined, the composite fuel data exhibited a drop in the rate of fuel consumption at high speeds, as shown in Figure 2. At higher speeds the power requirements would increase, leading to a higher rate of consumption. Because of this inconsistency these data were not used for calibration.

The model was calibrated for constant speeds and for the additional fuel consumed because of acceleration separately to reduce the correlation between parameters. The air drag and rolling friction coefficients computed from the model parameters would be unreliable if the correlation between them is high. A comparison of the computed and theoretical values of coefficients was made as a partial validation.

Constant Speed

The following equation explains the variation in fuel consumption as a function of speed when the acceleration is zero:

$$F_0 = P_1 + \frac{P_2}{V} + P_3V^2 \tag{6}$$

The parameter P_2 was calculated separately on the basis of the composite idling fuel consumption rate, which is a weighted average of the individual vehicle idling fuel consumption rates presented by McGill (*16*) as part of study results. Assigning a fixed value to P_2 would thus reduce the correlation between parameters. The remaining parameters, P_1 and P_3, were calibrated by using the constant-speed fuel consumption rates (zero acceleration).

Additional Fuel Due to Acceleration

The following equation explains the additional fuel consumed to overcome inertial forces:

$$F_a = P_4a_e + P_5[a_e^2]_{a_e>0} \tag{7}$$

Parameters P_4 and P_5 were calibrated by using the additional fuel consumed because of positive accelerations. The additional fuel was obtained by subtracting the constant-speed fuel consumption rate at a particular speed from the fuel consumption rate at positive accelerations for the same speed. Negative accelerations were not used for calibration because the additional fuel consumed for negative accelerations, obtained as described above, was negative.

It should be noted that the additional fuel consumption rates at low speeds [generally less than 16 km/hr (10 mph)] have not been used for calibration. At very low vehicle speeds the power is relatively high (because the vehicle starts from rest), and the engine speed is low. The assumption that the fuel efficiency factor β_1 in Equation 1 is constant is invalid because under these power and engine speed conditions the fuel efficiency is less than average (*18*). The exclusion of fuel rates at low speeds would result in an underestimation of fuel consumption at these speeds. However speeds below 16 km/hr (10 mph) are not very common in typical on-road driving on freeways. Therefore the error due to this underestimation would not be substantial.

Resulting Model

The relation resulting from the calibration is shown in Equations 8 and 9:

$$F_x = 12.76 + \frac{700}{V} + 0.0023V^2 + 39.21a_e + 0.0033[a_e^2]_{a_a>0} \tag{8}$$

If the expression $12.76 + 0.0023V^2 + 39.21a_e$ is negative, then

$$F_x = \frac{700}{V} \tag{9}$$

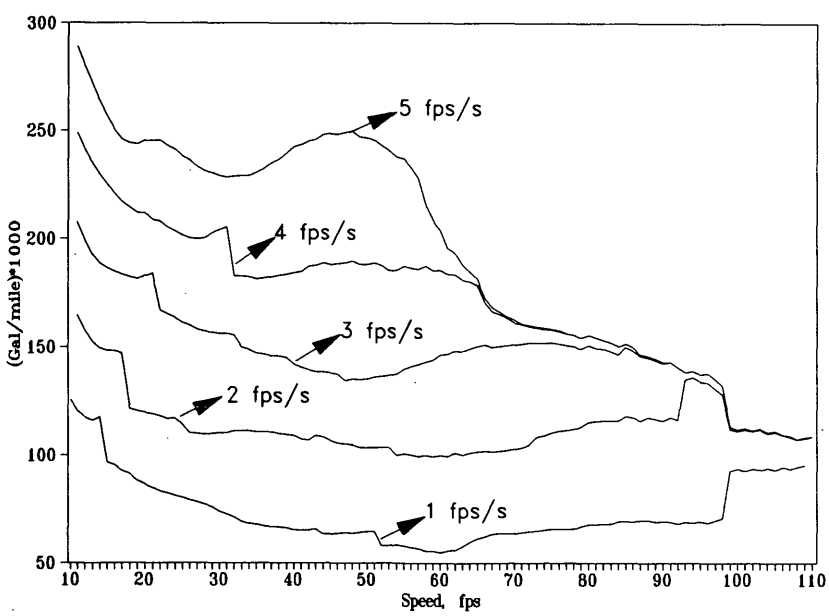

FIGURE 2 Composite fuel consumption data.

where

F_x = fuel consumption (in gal/mi * 1,000),
V = speed (in ft/sec), and
a_e = acceleration (in ft/sec^2).

The value of 700 for the parameter P_2 in Equation 9 corresponds to an idling fuel consumption rate of 0.5 ml/sec, which is the weighted average of the idling fuel consumption rates of all the test vehicles. Equation 8 explains 99.5 percent of the variation in the observed constant-speed fuel consumption data and 86.1 percent of the variation in fuel consumption because of acceleration.

At negative accelerations it was observed that the estimated fuel consumption rate is lower than the observed fuel consumption rate. For constant speed, that is, zero acceleration, the estimated fuel consumption rate compared very well with the observed fuel consumption rate. For positive accelerations the observed and the estimated fuel consumption rates match very closely at lower speeds. The deviation between the observed and the estimated fuel consumption rates at higher speeds is due to an illogical fall in the rate of consumption at higher speeds (Figure 2).

At low speeds it was observed that the estimated fuel consumption rate is always lower than the observed rate. The amount of underestimation depends on the rate of acceleration. The difference between the observed and the estimated values at high acceleration rates is greater than that at lower acceleration rates. This underestimation is due to a decrease in fuel efficiency at high accelerations and low engine speeds. However the error due to this underestimation is not expected to be large because speeds below 16 km/hr (10 mph) are not very common over long periods of time on freeways. Moreover most traffic models are not sufficiently capable of simulating facilities that operate under extremely congested conditions over prolonged periods of time. Hence the measures of effectiveness generated would not be reliable in any event.

Model Incorporation in FREFLO

The two segments of the model calibrated as discussed above were combined, and the resulting fuel consumption model was built into FREFLO logic. The flow chart in Figure 3 shows how the fuel consumption algorithm fits into FREFLO logic. As can be seen from the flow chart, fuel consumption is calculated at every time interval.

The changing conditions that prevail over a roadway network are either endogenous or exogenous. The exogenous data, specified by the user, include changes in traffic volumes, turning movement percentages, lane channelization, and so on. CORFLO allows the user to partition the simulation time into a series of "time periods" (TPs) of various durations. Each set of exogenous input data applies for and remains constant during one TP.

Each TP is further subdivided into a sequence of time intervals (TIs). Each simulation model requested is brought into and out of computer central memory once each TI. The output of cumulative simulation statistics is available only on a TI basis. The TI duration is typically set to the most common signal cycle length in a study network.

Each TI is again subdivided into time slices so that the effect of changing traffic conditions on adjoining links could be considered while simulating traffic on a particular link. Within a time slice traffic simulation on a link is independent of the conditions on any other link.

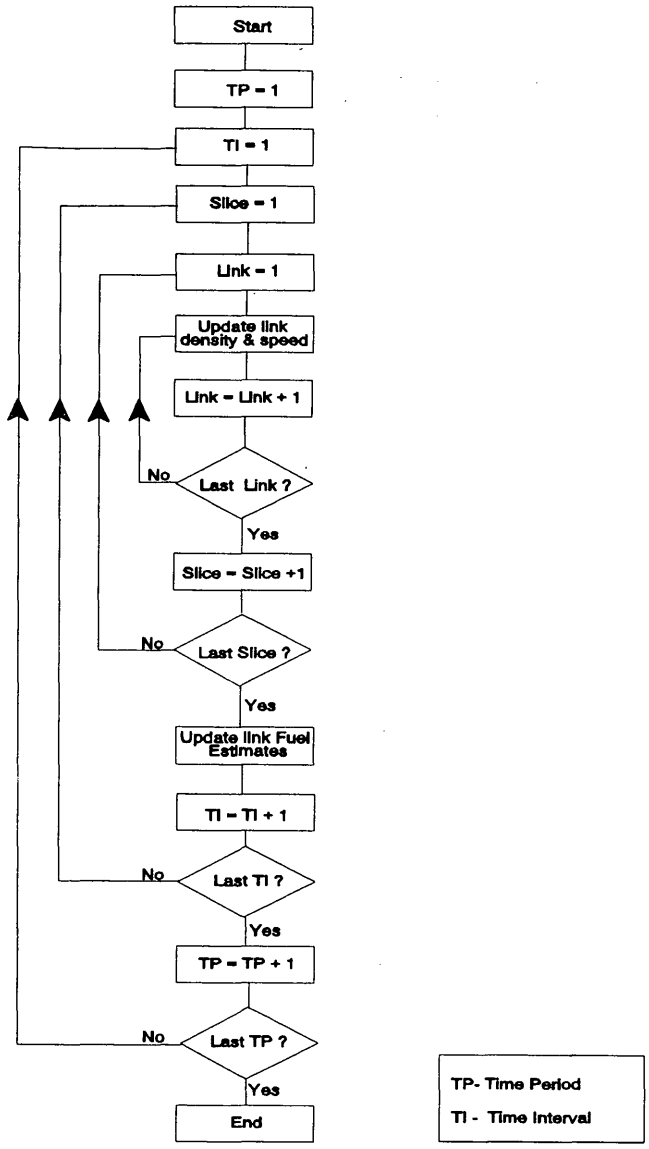

FIGURE 3 Fuel consumption algorithm in FREFLO logic.

FREFLO has two substantially dissimilar equilibrium speed-density relationships embedded in its logic. The choice of the relationship to be employed for simulation is specified by the user. The jam density value corresponding to the speed-density relationship employed for traffic simulation is used in the computation of acceleration noise by using Equation 3.

During those TIs when the average speed on the link is zero the total fuel consumed has been assumed to be equal to the sum of the idling fuel consumption of all vehicles stored on the link during the interval.

The width of the band used to estimate the effective acceleration from acceleration noise σ (Figure 1) was set at 0.25 * σ. This implies a maximum width of 0.213 m/sec^2 (0.7 ft/sec^2) at the maximum total acceleration noise of 0.854 m/sec^2 (2.8 ft/sec^2).

A maximum acceleration noise due to traffic interaction σ_{tm} of 0.732 m/sec^2 (2.4 ft/sec^2) has been assumed on the basis of earlier

findings (*14*). The natural component of acceleration noise σ_n has been assumed to be 0.293 m/sec^2 (0.4 ft/sec^2) (*13,15*). A maximum acceleration noise due to traffic interaction σ_{tm} of 0.732 m/sec^2 (2.4 ft/sec^2) implies that at jam density and assuming a normal distribution, about 4.56 percent of vehicles would have acceleration/deceleration greater than 1.71 m/sec^2 (5.6 ft/sec^2). It is not uncommon to have vehicles accelerating or decelerating at about 1.53 to 1.83 m/sec^2 (5 to 6 ft/sec^2) under congested, stop-and-go conditions on a freeway.

MODEL VALIDATION

To validate the assumptions made regarding the form of the fuel consumption relationship, the air drag and rolling friction coefficients estimated from the calibrated model parameters were compared with the theoretically expected values. To validate the estimation of the acceleration due to vehicle interaction and also the incorporation of the model into FREFLO logic, the fuel consumption estimates from FREFLO were compared with those produced by INTRAS.

Comparison of Coefficients

The air drag and rolling friction coefficients were computed from the calibrated model parameters in Equation 8. The masses of the vehicles were obtained from *Ward's Automotive Year Book* (*19–22*). The composite mass, equal to the weighted mean of individual vehicle masses, was found to be approximately 1590 kg (3,800 lbs). The air density was assumed to be 1.059 kg/m^3 (0.0662 lb/ft^3). This density is applicable for altitudes up to 1525 m (5,000 ft) above sea level. The frontal area of the composite vehicle was also computed as the weighted average of the individual vehicle frontal areas. The frontal area of individual vehicles was obtained from the vehicle dimensions presented in *Ward's Automotive Year Book* (*19–22*). The area used in the calculations was 2.8 m^2 (30.14 ft^2).

On the basis of the values given above the coefficients of air drag and rolling friction for the composite vehicle were found to be 0.23 and 0.01, respectively. As mentioned earlier the air drag coefficient for automobiles is generally between 0.25 and 0.55 and the rolling friction coefficient is in the range of between 0.01 and 0.017 (*23*). However it could be seen that the computed values for these coefficients are at the lower boundaries of the range of feasible values. This is because of a high value of the fuel efficiency factor β_1.

The model in Equation 8 accounts explicitly for air drag and rolling resistance only. Engine drag resistance and fuel consumed by accessories are not represented in the model and therefore are reflected in a high fuel efficiency factor β_1. The value of β_1 was found to be 0.63 L/kWh. Because the air drag coefficient and rolling friction coefficient are calculated on the basis of this value of β_1, they tend to be low.

Comparison with INTRAS

INTRAS, FHWA's microscopic freeway simulation model, was used as a benchmark against which to compare the fuel consumption estimates from the model incorporated into FREFLO. Unfortunately the fuel consumption estimates from INTRAS have not been validated. Therefore the principal objective of the comparison with INTRAS was to verify the absence of errors in the algorithm incorporated into FREFLO and the reasonableness of the results.

The default fuel consumption data in INTRAS are different from those used in FREFLO. To ensure that the fuel consumption data employed by INTRAS and FREFLO are identical, for comparison of fuel estimates, the default fuel consumption rates in INTRAS were replaced with the rates used in the present study.

Because the scope of the present study was limited to passenger vehicles only, bus and truck traffic was not simulated in either model. No further classification of passenger vehicles was used, although it is possible to have six different classes in INTRAS, to ensure similar traffic conditions in both models.

INTRAS has more than 20 embedded calibration parameters, of which 16 are distributions. Such a large number of calibration parameters would entail a tedious calibration process to make the model replicate known data on a certain site. However it was found that INTRAS produced results comparable to the actual conditions with the embedded calibration parameters for the test site used here (Barnes, unpublished data, 1989).

It was found in an earlier study that FREFLO produced results fairly consistent with the actual operating conditions of the test site when the freeway capacity was between 2,000 and 2,100 vehicles per hour per lane (vphpl) (Barnes, unpublished data, 1989). A capacity of 2,045 vphpl was assumed for the present study.

To ascertain the validity of assigning different jam density values depending on the speed-density relationship used and also to gauge the difference in fuel consumption estimates with either relationship utilized, both speed-density relationships in FREFLO were tested.

The traffic data collected from a 4.7-km (2.9-mi) section of Interstate 35 in Travis County, just north of Austin, Texas (Figure 4) was used for comparison of fuel estimates from FREFLO and INTRAS. It is the southbound roadway of a four-lane freeway in rolling terrain with 3.66-m- (12-ft)-wide lanes, a 3-ft paved left shoulder, and a 3.05-m (10-ft) paved right shoulder.

The differences in network coding requirements between INTRAS and FREFLO render it impossible to specify identical network configurations for the two models. However the differences were kept to a minimum.

The total simulation period of 2 hr was split into 12 time periods each of 10 min in duration. The cumulative measures generated by FREFLO and INTRAS were disaggregated to reflect conditions during each time period. Traffic variables were aggregated over each time period because the 10-min duration of the time periods was assumed to provide a fairly good indication of the varying traffic conditions.

It was observed that the cumulative fuel consumption estimates after 2 hr from the two simulation programs differ by about 11 percent, with the INTRAS estimates being higher. The biggest difference in the fuel estimates between the two programs occurred during a period of transition from congested to normal operations, when the two simulation algorithms also differed substantially in their estimates of the traffic variables. The difference in the traffic variable estimates may have contributed to the overall difference in the fuel estimates produced by FREFLO and INTRAS.

During the early period of simulation the fuel estimates resulting from the application of the two speed-density relations in

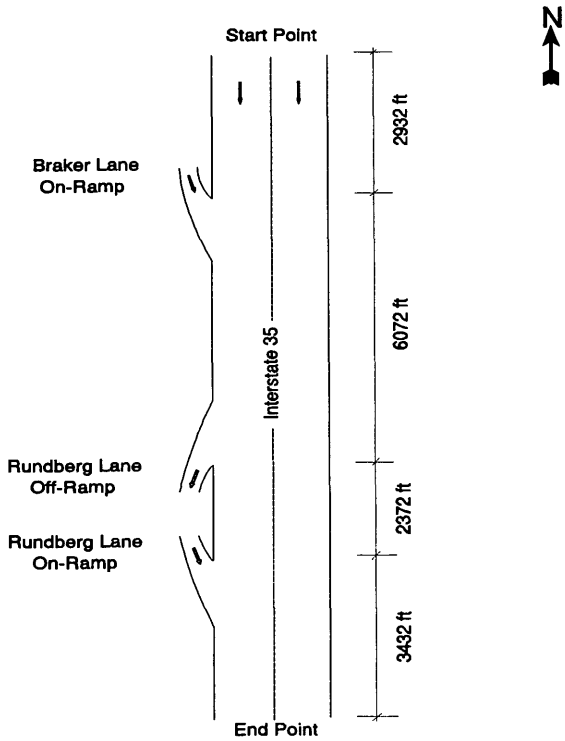

FIGURE 4 I-35 in Travis County, north of Austin, Texas.

FREFLO differed fairly substantially. This difference may have been due to the lower value of jam density in the first equilibrium speed-density relationship than in the second relationship, which makes the fuel consumption algorithm more sensitive to increases in the link densities, because the acceleration noise is a function of the ratio of density to jam density.

The assumption that the additional fuel consumed because of vehicle interaction is zero for densities of less than one-third jam density may lead to a small underestimation of fuel consumption because, even under free-flow conditions, it is not possible to maintain absolutely constant speeds. The natural component of acceleration noise contributes to some additional fuel consumption.

In conclusion the fuel estimates from FREFLO and INTRAS were generally comparable during most of the simulation period. The small discrepancies between the estimates may be attributed to the differences in the traffic variables generated by the two programs and also to the minor differences in network coding. It should be reiterated, however, that there was no study to validate the fuel consumption estimates produced by INTRAS with those observed under actual road conditions.

SUMMARY AND RECOMMENDATIONS

A fuel consumption model for FREFLO was developed, calibrated, and implemented. A limited validation study was also conducted. The ability to estimate freeway fuel consumption makes CORFLO a more powerful tool for evaluating traffic management strategies. FHWA requested and was granted a license to implement the fuel consumption model and the related computer code developed in the present study in the official version of CORFLO.

In this study the fuel consumption characteristics of passenger vehicles operating on an uninterrupted flow facility under hot stabilized conditions, and assuming that the engine is properly tuned, were considered. However it should be noted that the fuel consumption characteristics when the engine is cold, and also when the engine is not properly tuned, could be substantially different and should also be considered to obtain more accurate estimates of fuel consumption.

The scope of the study was limited to passenger vehicles only. It is recommended that other classes of vehicles also be considered for fuel consumption estimation. Without considering bus fuel consumption, it may not be possible to estimate fuel savings from high-occupancy vehicle lane use and transit improvements by using CORFLO.

Although NETFLO, the arterial street component of CORFLO, has a fuel consumption algorithm, it is based on old fuel consumption rates. For CORFLO to be an effective tool for evaluating corridor traffic management strategies, the model in NETFLO should also be updated with the latest fuel consumption data.

The purpose of any traffic simulation model is to evaluate the benefits that could be obtained in the form of reductions in delay, stops, fuel consumption, and so on by adopting alternative traffic management strategies. To estimate fuel consumption most traffic models have a fuel consumption module. However there has been no study in the United States to validate the fuel estimates from those models with those actually observed. Because the fuel estimates are an important output from simulation, which is used in evaluating traffic management strategies and making decisions, it is recommended that a study be conducted to validate the fuel estimates from a microscopic model like INTRAS, which could then be used as a benchmark to validate other more aggregate models like FREFLO. A microscopic model is recommended for this purpose because the actual conditions are represented in greater detail in microscopic models, and the estimates of traffic variables are generally expected to be closer to the actual values.

ACKNOWLEDGMENTS

The research performed for this paper was funded by the project titled Fuel Savings from Surveillance, Signing, and Signal Control Systems for Freeway Congestion Reduction, of the Energy Research in Applications Program administered by the Texas Higher Education Coordinating Board. The authors express their sincere gratitude to Donald L. Woods and R. Quinn Brackett for their advice during the research.

REFERENCES

1. Bowyer, D. P., R. Akcelik, and D. C. Biggs. *Guide to Fuel Consumption Analyses for Urban Traffic Management.* ARRB Special Report SR 32. Australian Road Research Board, 1986.
2. Wicks, D. A., and B. J. Andrews. *Development and Testing of Intras, a Microscopic Freeway Simulation Model, Volume 2, User's Manual.* Report FHWA/RD-80/107. FHWA, U.S. Department of Transportation, 1980.
3. French, A. Vehicle Operating Characteristics. In *Transportation and Traffic Engineering Handbook,* 2nd ed. Institute of Transportation Engineers, 1982.
4. Winfrey, R. *Economic Analysis for Highways.* International Textbook Co., Scranton, Pa., 1969, p. 290.
5. Akcelik, R., C. Bayley, D. P. Bowyer, and D. C. Biggs. A Hierarchy of Vehicle Fuel Consumption Models. *Traffic Engineering and Control,* Vol. 24, No. 10, 1983, pp. 491–495.

6. Kent, J., K. Post, and J. A. Tomlin. Fuel Consumption and Emission Modelling in Traffic Links. In *Proc., SAE/A ARRB 2nd Conference, Traffic, Energy and Emissions*, Melbourne, Australia, 1982, pp. 10.1–10.19.
7. Biggs, D. C., and R. Akcelik. Validation of a Power-Based Model of Car Fuel Consumption. In *ARRB Internal Report AIR 390-4.* Australian Road Research Board, 1984.
8. Akcelik, R. Efficiency and Drag in the Power-Based Model of Fuel Consumption. *Transportation Research B*, Vol. 23B, No. 5, 1989, pp. 376–385.
9. Biggs, D. C., and R. Akcelik. Further Work on Modelling Car Fuel Consumption. In *ARRB Internal Report AIR 390-10.* Australian Road Research Board, 1985.
10. Biggs, D. C., and R. Akcelik. An Energy-Related Model of Instantaneous Fuel Consumption. *Traffic Engineering and Control*, Vol. 27, No. 5, 1986, pp. 320–325.
11. Bester, C. J. Fuel Consumption on Congested Freeways. In *Transportation Research Record 801*, TRB, National Research Council, Washington, D.C., 1981, pp. 51–54.
12. Montroll, E. W., and R. B. Potts. Car Following and Acceleration Noise. In *Special Report 79: An Introduction to Traffic Flow Theory.* HRB, National Research Council, Washington, D.C., 1964, pp. 39–48.
13. Herman, R., et al. Traffic Dynamics: Analysis of Stability in Car Following. *Operations Research*, Vol. 7, 1959, pp. 86–106.
14. Drew, D. R., C. L. Dudek, and C. J. Keese. Freeway Level of Service as Described by an Energy Acceleration Noise Model. In *Highway Research Record 162*, HRB, National Research Council, Washington, D.C., 1966, pp. 30–85.
15. Jones, T. R., and R. B. Potts. The Measurement of Acceleration Noise—A Traffic Parameter. *Operations Research*, Nov.–Dec. 1962, pp. 745–763.
16. McGill, R. *Fuel Consumption and Emission Values for Traffic Models.* Report FHWA/RD-85/053. FHWA, U.S. Department of Transportation, 1985.
17. Santiago, A. J. Vehicular Fuel Consumption Maps and Passenger Vehicle Fleet Projections. Presented at 62nd Annual Meeting of the Transportation Research Board, Washington, D.C., Jan. 1983.
18. Biggs, D. C. Fuel Consumption Estimation Using ARFCOM. In *Proc., 14th ARRB Conference*, Part 3, 1989, pp. 280–292.
19. *Ward's Automotive Year Book*, 43rd ed. Wards Communications, Inc. 1981.
20. *Ward's Automotive Year Book*, 44th ed. Wards Communications, Inc. 1982.
21. *Ward's Automotive Year Book*, 45th ed. Wards Communications, Inc. 1983.
22. *Ward's Automotive Year Book*, 46th ed. Wards Communications, Inc. 1984.
23. Mannering, F. L., and W. P. Kilareski. *Principles of Highway Engineering and Traffic Analysis.* John Wiley and Sons, Inc., 1990.

Publication of this paper sponsored by Committee on Energy Conservation and Transportation Demand.