Three-Dimensional, Finite-Element Simulation of Permanent Deformations in Flexible Pavement Systems

DAVID J. KIRKNER, PETER N. CAULFIELD, AND DENNIS M. MCCANN

A methodology for obtaining a three-dimensional finite-element solution to the problem of a moving load on an elastic-plastic half-space is presented. The problem is particularly suited to an analysis of flexible pavement systems. The basis of the model is the following set of assumptions: (*a*) the material is homogeneous and infinite in extent in every horizontal plane, (*b*) the load is moving at a constant velocity, (*c*) the system is at steady state, (*d*) inertial effects are neglected. A model problem was examined that consisted of a homogeneous half-space of an isotropic material obeying the von Mises yield criterion and the associated flow rule. The magnitude of the permanent deformations is calculated versus the value of the applied surface pressure. The residual stress field remaining after the passing of the load is also obtained. More general problems are solvable with the current version of the code. Extensions are discussed.

The ability to predict the amount and growth of permanent deformation in pavement systems is an important aspect of pavement design. A method for calculating the permanent deformation in three-dimensional, layered, elastic-plastic half spaces is described. This method is particularly suitable for the analysis of flexible pavement systems, for which the permanent deformation may result in large measure from a failure of the granular base material.

Development of a mechanical model to predict permanent deformations in a pavement system is a difficult task because of many complicating factors that attend the problem. Such a physical system is inherently three dimensional; the load is moving and the constitutive laws for the materials are nonlinear and history dependent. Currently models do not exist that incorporate all pertinent aspects of the problem.

Good reviews of state-of-the-art prediction of permanent deformations in pavement systems are given by Sousa et al. (*1*) and by Zaniewski (*2*). Methods for predicting permanent deformations may be grouped in the following broad categories: mechanical models, combined mechanical-empirical models, and empirical models. A mechanical model is defined to be a set of equations containing a set of physical parameters that must be specified in advance, the solution of which is capable of predicting the behavior of the physical system of interest. The required physical parameters are obtained from laboratory experiments and are usually constitutive parameters (i.e., coefficients in the stress-strain law). The set of equations normally is determined from the basic axioms of continuum mechanics. A combined mechanical-empirical model uses the results of a mechanical model as input to a set of experiments meant to simulate the physical phenomena. Thus, final predictions are made on the basis of physical simulations. Empirical models are laboratory or field-scale experiments the results of which are meant to simulate the actual phenomena of interest. Most engineering design strives to develop efficient and reliable mechanical models on which to base design, because these require only a sufficient data base of experimental results and therefore are the simplest to implement on a regular basis.

It seems reasonable that the ability to predict accurately the permanent deformation occurring after one pass of a moving load should be a prerequisite to predicting the accumulated permanent deformation resulting from potentially thousands of passes. Some of the combined mechanical-empirical models attempt to predict the accumulated permanent deformation, but they require an estimate of the state of stress in the pavement when it is subjected to a single pass of a moving load. The so-called "layer strain methodology" is such an approach (*3*). However, the analysis typically used to compute the stress does not usually include such features of the problem as the inelasticity and nonlinearity of the response nor the effect of the moving load. This information must come from a suitable mechanical model.

A perusal of the current literature [see work by Sousa et al. (*1*) and Majidzadeh et al. (*4*) for reviews] reveals that complete mechanical models have not yet been developed for predicting permanent deformation of pavement systems. Important facets of the problem that cannot be ignored are (*a*) the load moving on the pavement system and (*b*) the inelastic and nonlinear response. Structural analysis of systems subjected to moving loads is a subject by itself. An excellent treatise on the subject is given by Fryba (*5*), which covers beams, plates, as well as continua. However, Fryba deals only with analytical solutions and only with systems possessing linear constitutive laws. No current models are available that include both of these aspects of the problem. There are models that allow for a moving load [Battiato et al. (*6*), Elliot and Moavenzadeh, (*7*)]. However, these models are based on linear viscoelastic constitutive laws using the Maxwell fluid concept. This type of constitutive law allows permanent deformation but does not include any plastic strains and is inapplicable for modeling permanent deformations in granular base materials, an important feature in flexible pavement systems.

In this paper a method is described for performing three-dimensional, nonlinear analysis of layered, elastic, and elastic-plastic systems, including the effects of a moving load. Thus it is particularly applicable to flexible pavement systems. The model is based on a steady-state solution to the problem of a moving load on a layered system and presumes the layered system to be homogeneous in the horizontal direction and infinite in extent. These assumptions greatly simplify the analysis of an extremely

D. Kirkner and P. Caulfield, Department of Civil Engineering and Geological Sciences, University of Notre Dame, Notre Dame, Ind. 46556. D. McCann, Lawson-Fisher Associates, P.C., 525 West Washington Avenue, South Bend, Ind. 46601.

complicated problem. It should be noted that three-dimensional finite-element analyses, including nonlinear behavior, of pavement systems have been performed [by Ioannides and Donnelly (*8*), Kokkins (*9*), and Forte et al. (*10*)] but have not included moving load effects, which is the principal focus of this work.

This paper is primarily expository; it is to explain the methodology and its application to a three-dimensional problem. To focus on the principal effects of the plasticity and the moving load, a simplified model problem is studied. This is a homogeneous layer overlaying a rigid subbase of an isotropic material subjected to a moving, uniform load distributed over a square area. The quasistatic solution is obtained. Inertial effects below the critical speed are easily accommodated, however. The methodology, and in fact the code employed, can also accommodate layering, more complicated material descriptions, and a nonuniform moving load distributed over an arbitrarily shaped region.

MODELING STRATEGY

A cross section through the problem to be studied is depicted schematically in Figure 1. This is the x_1-x_2 plane at $x_3 = 0$. The problem domain consists of a half-space defined by the region $x_2 < 0$. This region is subject to a uniform pressure of magnitude p distributed over a square $a \times a$ moving with a constant velocity c in the x_1 direction. This problem may be stated as a boundary value problem with the stresses σ_{ij}, strains ϵ_{ij}, and displacements u_i as unknowns. Note that the load moves with constant velocity c, and that steady-state conditions are assumed; that is, the load began an infinite time in the past. Because of the steady-state assumption and the assumption that the domain is homogeneous in the x_1 direction, a moving coordinate system can be used to advantage. Let

$$y_1 = x_1 - ct \qquad y_2 = x_2 \qquad y_3 = x_3 \tag{1}$$

Using the moving coordinate system (y_1, y_2, y_3) rather than the fixed reference frame (x_1, x_2, x_3) allows time to be removed as an explicit variable in the problem. Integration in time is thus replaced by integration in y_1. Further details of the mathematical development are given by Kirkner (*11*).

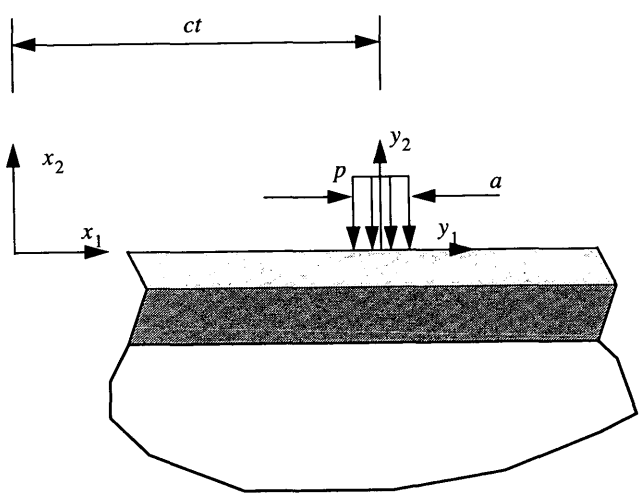

FIGURE 1 Schematic of model three-dimensional moving load problem.

For the work considered here, the constitutive equations will take the form of rate-independent plasticity. For simplicity of presentation, the von Mises yield criterion and the associated flow rule will be used, and the problem domain is assumed to be homogeneous. Thus,

$$\sigma_{ij} = C_{ijkl}\epsilon^e_{ij} \tag{2}$$

where

σ_{ij} = stress tensor;
C_{ijkl} = elasticity tensor, corresponding here to an isotropic material; and
ϵ^e_{ij} = elastic strain tensor.

The additive decomposition of strains is assumed; that is,

$$\epsilon_{ij} = \epsilon^e_{ij} + \epsilon^p_{ij} \tag{3}$$

where ϵ_{ij} is the total strain tensor and ϵ^p_{ij} is the plastic strain tensor. The von Mises yield criterion is

$$f(\sigma_{ij}) = \sigma_e - \sigma_y = 0 \tag{4}$$

where σ_e, the effective stress, is given by

$$\sigma_e = \left[\frac{1}{2}(\sigma_{22} - \sigma_{33})^2 + \frac{1}{2}(\sigma_{33} - \sigma_{11})^2 + \frac{1}{2}(\sigma_{11} - \sigma_{22})^2 + 3\sigma_{23}^2 + 3\sigma_{31}^2 + 3\sigma_{12}^2\right]^{\frac{1}{2}} \tag{5}$$

and σ_y is the yield stress. The associated Prandtl-Reuss flow rule is

$$\dot{\epsilon}^p_{ij} = \dot{\lambda}\frac{\partial f}{\partial \sigma_{ij}} \tag{6}$$

With the introduction of the moving coordinate system, the time derivatives appearing in Equation 6 become derivatives with respect to y_1.

Note that the coordinate y_1 may be given different physical interpretations. If time is considered as fixed at an instant, the solution to the problem in terms of y_1, y_2, y_3 may be thought of as a "snapshot" of the physical domain (in terms of x_1, x_2, x_3) at an instant. Alternatively, if x_1 is to be held fixed, a graph of any quantity (stress, strain, displacement) expressed as a function of y_1 is actually a time history of that particular quantity. Both of these views are useful in understanding the following.

In order to evaluate the constitutive relation for an elastic-plastic material, the evolution equation for the plastic strain must be evaluated. This requires tracking the response history at each point. However, as explained above, if y_1 is thought of as a time-like variable for fixed x_1, an integration of the response history in time is equivalent—in the moving reference frame—to an integration over y_1. This integration forms the basis of a numerical solution strategy described here.

The finite-element technique employed here is based on the weak form (virtual work) of the problem (*12*) using the moving

coordinate frame (y_1, y_2, y_3). Complete details of the development may be found in a paper by Kirkner (*11*).

An iterative strategy based on the initial stress method has been found to work well for this problem. Following the development by Kirkner (*11*), global finite-element equations result:

$$\mathbf{K}\ \Delta\mathbf{d} = \mathbf{p}^m \tag{7}$$

where

$\mathbf{K}$ = elastic stiffness matrix,
$\Delta\mathbf{d}$ = vector containing the difference in the nodal displacements between the previous iteration (mth iteration) and the new solution [$(m + 1)^{st}$ iteration], and
$\mathbf{p}^m$ = solution-dependent load vector (the superscript indicates that the load vector is evaluated at the previous solution)

An iteration scheme using a consistent tangent modular matrix has also been used, but the method above works very well and is the easiest to implement.

The stress tensor at each Gauss point must be evaluated, and each iteration given the state at the last iteration. This, in essence, requires that the flow rule (Equation 6) be integrated. However, because integration in time has been replaced by integration over y_1, this simply means tracing the history over the space coordinate, y_1. The algorithm operates on the elements in a preferred order. Starting at the right side of the mesh, that is, large y_1, where it may be presumed that the response is purely elastic, the stresses are calculated for succeeding elements proceeding right to left (for a load traveling left to right). In order to evaluate the stress at a particular Gauss point, only the stress and strain at the Gauss point to the right need to be known. A backward Euler method is used to integrate the flow rule; a thorough discussion of this and other schemes for integrating the flow rule has been presented elsewhere (*13*).

Note that although a moving load problem seems inherently more difficult than a corresponding stationary load problem, the algorithm employed here requires only negligible storage compared with the stationary load problem, for which the stress and strain tensors at all Gauss points that have yielded must be stored from iteration to iteration.

RESULTS

A model problem will be analyzed in this section to demonstrate the implementation of the methodology. For simplicity, a homogeneous domain is considered with an isotropic material obeying the von Mises yield criterion without hardening. The results are most useful when expressed in terms of dimensionless variables. Table 1 gives the dimensionless variables in terms of the primary variables of the problem. All the figures following give results in terms of the dimensionless variables. The truncated domain used for analysis is presented in Figure 2. Note that symmetry about the y_1-y_2 plane is represented. Once inelastic effects are present, symmetry about the y_2-y_3 plane no longer exists. The size of the truncated domain in the horizontal directions was determined experimentally. That is, domains larger than that shown give essentially identical results. The depth to the bottom boundary was chosen arbitrarily and was assumed to be a reasonable distance to a stiffer subgrade. Roller-type boundary conditions are used on all external faces except the top surface. Other conditions such as complete fixity on the bottom boundary can easily be accommodated. This problem has been solved for several values of the pressure load p. A uniform mesh consisting of standard eight-node hexahedral isoparametric elements was employed. The results following were obtained using a uniform mesh consisting of 40 elements in the y_1 direction, 12 elements in the y_2 direction, and 16 elements in the y_3 direction. This corresponds to 25,511 unknown displacement degrees of freedom.

TABLE 1 Variable Definitions

Variable Name	Primary Variable	Dimensionless Variable
Distance	y	y/a
Stress	σ	σ/σ_y
Applied Pressure	p	p/σ_y
Yield Stress	σ_y	1
Displacement	u	$(uE)/(\sigma_y a)$
Modulus of Elasticity	E	1
Poisson's Ratio	υ	$\upsilon = 0.3$

Figure 3 shows displacement profiles corresponding to several different values of the applied pressure. These are plots of the displacement of the points on the y_1 axis—in essence, the pavement centerline. It is useful to keep in mind the dual interpretation of the moving coordinate y_1. The profiles may be viewed as "snapshots" capturing one instant or as a displacement time history that every point on the original x_1 axis will follow. Thus, values of the displacement at large positive values of y_1 occur long before the load arrives, and values of the displacement at large negative values of y_1 occur long after the load has passed. At an applied pressure of 1.43, note that the profile is symmetric and that no permanent displacement is left after the load has passed. For pressures of 1.7 and 2.0, permanent displacements are left and the profile is no longer symmetric because of the fact that once yielding occurs, energy is dissipated and the applied load must now perform work. This phenomenon is discussed further by Kirkner (*11*). Figure 4 shows the peak values of the displacement that occurs under the load and the peak value of the permanent displacement versus pressure. No permanent displacement occurs until the pressure is approximately 1.57, which is approx-

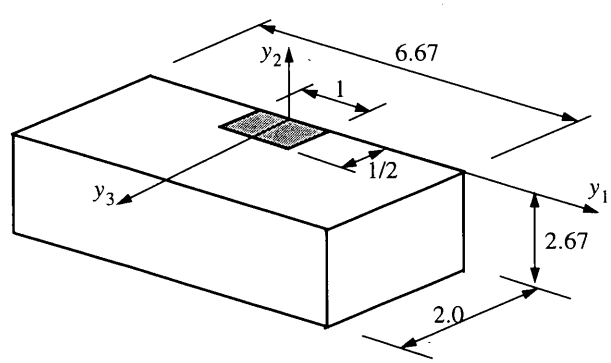

FIGURE 2 Model problem showing truncated domain in dimensionless units.

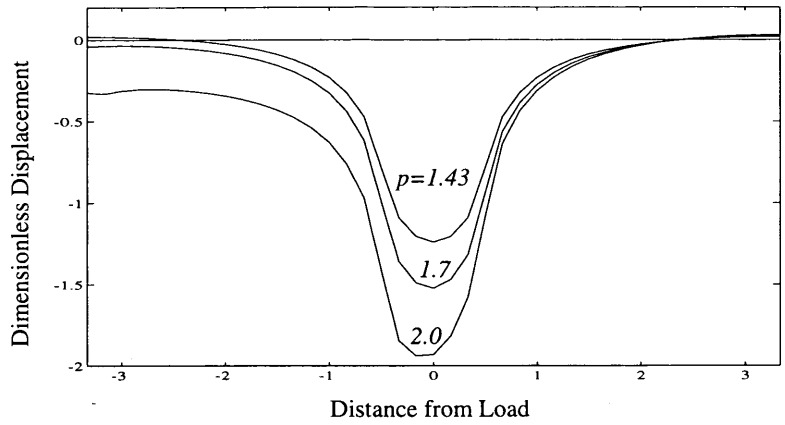

FIGURE 3 Displacement profiles.

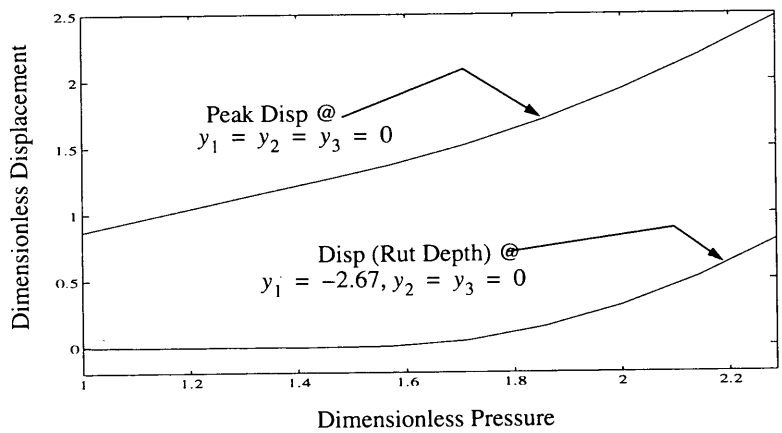

FIGURE 4 Peak displacement and rut depth versus pressure.

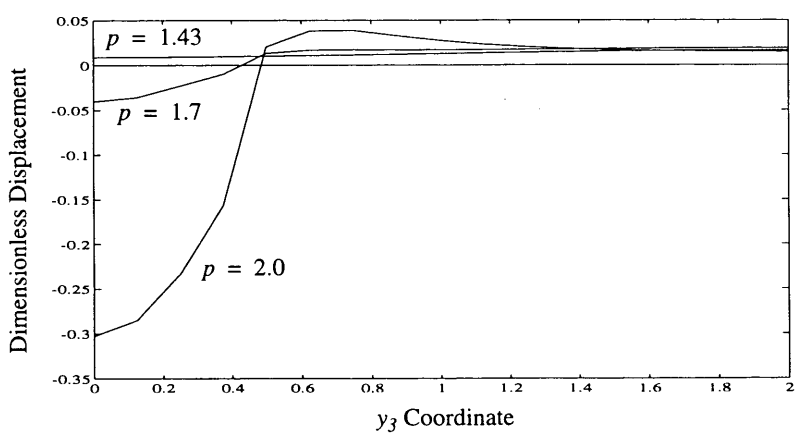

FIGURE 5 Rut profiles at $y_1 = -2.67$.

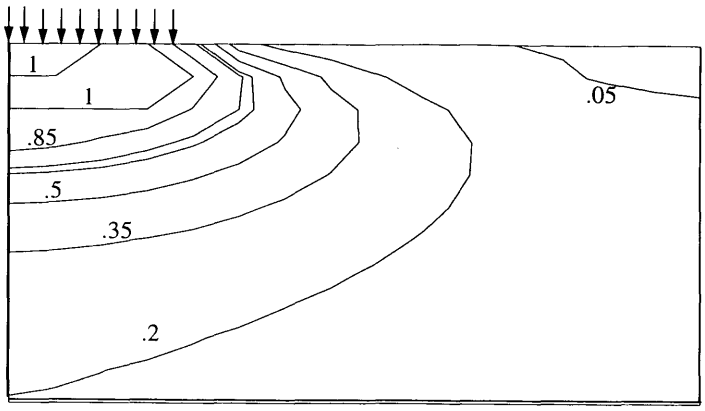

FIGURE 6 Equivalent stress contours on y_1 = 0 for p = 2.

imately the load to cause first yield. However, the magnitude of the permanent displacement or rut depth then grows rapidly with increasing pressure. That is, as the pressure increases beyond the pressure to cause yield, a smaller percentage of the maximum displacement is recovered through elastic rebound.

It is also instructive to examine surface profiles of points on the surface on lines parallel to the y_3 axis. In essence, such plots show the rut profile. Figure 5 shows rut profiles for several values of the applied pressure viewed from the negative side.

Once the moving load causes the material to yield, the system is left not only with permanent displacements but with residual stresses. Stress contours provide a convenient method to examine the stress state in the system. Contours will be shown for planes parallel to the y_2-y_3 plane as viewed from the negative side. Figure 6 shows stress contours on the plane y_1 = 0 corresponding to an applied pressure of 2.0. Again these contours may be thought of as those every cross section is subjected to when the load is directly passing over. The contours are of the equivalent stress since this quantity directly determines whether a material point yields according to the von Mises criterion. Note that there is a zone below the surface that has yielded. The depth of this zone below the surface is greatly affected by the depth to the bottom boundary. Figure 7 shows a similar plot for the plane y_1 = −2.67, which is far enough behind the load that it is essentially in a steady state. That is, this stress state remains in every plane long after the load has passed and is the stress state that would be used in the elements on the right boundary as initial stresses in a reanalysis to perform a second pass.

CONCLUSION

A methodology has been presented for the analysis of three-dimensional pavement systems subjected to moving loads and containing materials exhibiting elastic-plastic behavior. The model is capable of predicting permanent deformations. Key to understanding the model are the following assumptions: (*a*) the material is homogeneous and infinite in extent on every horizontal plane; (*b*) the load is moving at a constant velocity; (*c*) the system is at steady state; (*d*) inertial effects are neglected. Potential application of this model to pavement systems was demonstrated by the analysis of a model three-dimensional system. The permanent deformation, rut profiles, and development of residual stresses were studied. The following features can be included within this format with only minor changes in the coding: inertia effects, viscous or rate-dependent material behavior (important for asphaltic materials), more realistic constitutive behavior applicable to granular

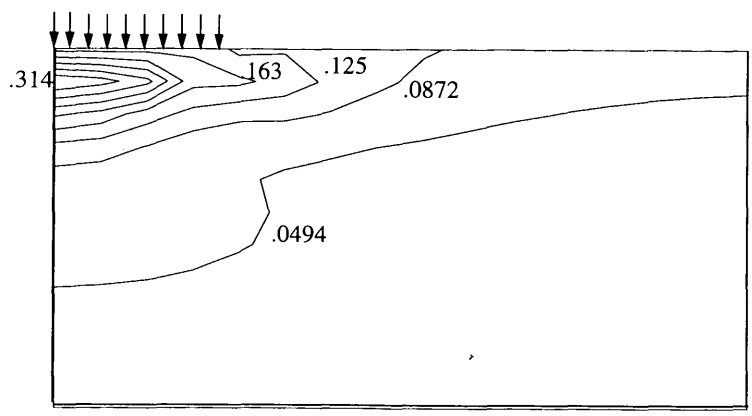

FIGURE 7 Equivalent stress contours on y_1 = −2.67 for p = 2.

materials [see work by Desai (*14*), for example]. Studies are currently under way that investigate these features of the problem.

ACKNOWLEDGMENT

This work was partially supported by a Jesse H. Jones Faculty Research Grant at the University of Notre Dame. The support is gratefully acknowledged by the authors.

REFERENCES

1. Sousa, J. B., J. Craus, and C. L. Monismith. *Summary of Report on Permanent Deformation in Asphalt Concrete*. Strategic Highway Research Program, SHRP-A/IR-91-104, National Research Council, Washington, D.C., 1991.
2. Zaniewski, J. State of the Art of Airport Pavement Analysis and Design. In *Proc., Unified Airport Pavement Design and Analysis Concepts Workshop*, DOT/FAA/RD-92/17, FAA, U.S. Department of Transportation, 1992.
3. Brown, S. F. and C. F. Bell. The Validity of Design Procedures for the Permanent Deformation of Asphalt Pavements. *Proc., 4th International Conference on the Structural Design of Asphalt Pavements*, Vol. 1, Ann Arbor, Mich., 1977.
4. Majidzadeh, K., C. L. Saraf, S. Mesarovic, and G. J. Ives. State of the Art Review of Rutting and Cracking in Pavements. *Proc., Unified Airport Pavement Design and Analysis Concepts Workshop*, DOT/FAA/RD-92/17, FAA, U.S. Department of Transportation, 1992.
5. Fryba, L. *Vibration of Solids and Structures Under Moving Loads*. Noordhoff International Publishing, Gronigen, Netherlands, 1972.
6. Battiato, G., F. Ronco, and A. Verga. Moving Loads on a Viscoelastic Double Layer: Prediction of Recoverable and Permanent Deformations. *Proc., 4th International Conference on the Structural Design of Asphalt Pavements*, Vol. 1, Ann Arbor, Mich., 1977.
7. Elliot, J. F. and F. Moavenzadeh. Analysis of Stresses and Displacements in Three-Layer Viscoelastic Systems. In *Highway Research Record 345*, HRB, National Research Council, Washington, D.C., 1971, pp. 45–57.
8. Ioannides, A. M. and J. P. Donnelly. Development of User Guidelines for a Three-Dimensional Finite Element Pavement Model. *Proc., Unified Airport Pavement Design and Analysis Concepts Workshop*, DOT/FAA/RD-92/17, FAA, U.S. Department of Transportation, 1992.
9. Kokkins, S. J. FAA Unified Pavement Analysis 3-D Finite Element Method. *Proc., Unified Airport Pavement Design and Analysis Concepts Workshop*, DOT/FAA/RD-92/17, FAA, U.S. Department of Transportation, 1992.
10. Forte, T., K. Majizadeh, J. Kennedy, J. Hadden, and T. White. Federal Aviation Administration Pavement Modeling. *Proc., Unified Airport Pavement Design and Analysis Concepts Workshop*, DOT/FAA/RD-92/17, FAA, U.S. Department of Transportation, 1992.
11. Kirkner, D. J. Steady State Solutions to Moving Load Problems with Elastic-Plastic Foundation Models. *Journal of Engineering Mechanics*, in preparation.
12. Zienkiewicz, O. C. and R. L. Taylor. *The Finite Element Method*, Vol. 1. McGraw-Hill Book Co., London, England, 1989.
13. Crisfield, M. A. *Nonlinear Finite Element Analysis of Solids and Structures*. John Wiley and Sons, Inc., New York, 1991.
14. Desai, C. S. and H. J. Siriwardane. *Constitutive Laws for Engineering Materials with Emphasis on Geologic Materials*. Prentice-Hall, Inc., Englewood Cliffs, N.J., 1984.

Publication of this paper sponsored by Committee on Strength and Deformation Characteristics of Pavement Sections.