Box-Beam Guardrail Terminal

DEAN L. SICKING, KING K. MAK, AND WILLIAM B. WILSON

A crashworthy terminal for box-beam guardrails was developed and successfully crash tested. The terminal incorporated a telescoping tube configuration with a 7-in. × 7-in. × 1/8-in. (178-mm × 178-mm × 3.2-mm) outer tube placed over the standard 6-in. × 6-in. × 3/16-in. (152-mm × 152-mm × 4.8-mm) box-beam rail element. A breakaway post and cable mechanism, similar to that used with the breakaway cable terminal, was used at the end of the terminal to provide anchorage for downstream impacts. An impact head attached to a short segment of a 6-in. × 6-in. × 3/16-in. (152-mm × 152-mm × 4.8-mm) box beam was inserted into the upstream end of the outer tube. The impact head serves to capture impacting vehicles, and the short tubular element slides back into the outer tube to allow the lead wood post to break away. A breakaway tensile connector similar to that used in the ET-2000 terminal was incorporated to transmit tension between the two telescoping tubes without adversely affecting system compression. Pultruded glass/polyester fiber-reinforced plastic tubes were inserted inside the telescoping steel tubes to provide energy dissipation. Full-scale crash testing demonstrated that this telescoping tube terminal for box-beam guardrails met safety standards set forth in *NCHRP Report 230*.

Guardrails are often used to protect the motoring public from serious roadside hazards such as bridge piers and steep roadside slopes. Even though guardrail installation is considered a safety improvement at these sites, the barrier is a hazard in itself. In fact guardrails are the third leading object struck in fatal ran-off-road accidents, behind only trees and utility poles (*1*). A large portion of these fatalities can be directly attributed to accidents involving guardrail terminals. A recent study of guardrail accidents in Texas indicated that terminals accounted for 41 percent of all fatal guardrail accidents, whereas they constituted only 20 percent of nonfatal guardrail accidents (*2*).

The severity associated with guardrail terminal accidents has prompted recent development of improved guardrail end treatments for the widely used W-beam guardrail (*3–6*). However, less widely used barriers, such as box-beam guardrails, have been neglected. The only terminal currently available for box-beam guardrails involves tapering the rail element down to the ground. This sloped-end design has been shown to have the potential for causing impacting vehicles to vault and roll over under certain impact conditions, particularly for small vehicles traveling at high speeds (*7*).

The lack of a crashworthy terminal for box-beam guardrails has caused the Wyoming Department of Transportation (WyDOT) and other highway agencies to begin flaring box-beam guardrail ends out of the clear zone. This practice requires additional lengths of guardrail beyond the length of need, resulting in higher barrier costs and increased frequencies of barrier accidents. Furthermore, this practice cannot be implemented at some sites because of roadside slopes that restrict the ability to flare the guardrail ends. Thus, highway agencies are faced with a choice of using a different type of barrier that may result in severe snow-drifting problems, installing expensive crash cushions to shield the barrier end, or installing an unsafe terminal within the clear zone.

In recognition of the safety problems posed by existing box-beam guardrail terminal designs, WyDOT sponsored a research study at the Texas Transportation Institute to develop a safer end treatment for this barrier (*8*). The objective of the research was to develop a crashworthy terminal for box-beam guardrails that are relatively inexpensive to construct and maintain. The remainder of this paper describes the development and full-scale crash testing of this new telescoping tube terminal for box-beam guardrails.

DESIGN CRITERIA

In accordance with *NCHRP Report 230* (*9*), a guardrail terminal is required to provide safe deceleration or controlled barrier penetration for vehicles striking upstream from the beginning of the length of need (LON) and barrier anchorage for redirecting vehicles striking beyond the LON. Controlled penetration of a barrier end at a high rate of speed could still lead to secondary collisions with serious consequences. Thus, it is desirable for a barrier terminal to provide some level of impact attenuation. Attenuating terminals capture vehicles striking head-on or at low angles and provide safe deceleration until the vehicle comes to a stop. Although attenuating terminals cannot capture vehicles striking at very high angles, the vehicles are slowed significantly and the severity of any secondary impact is minimized. Field experience has shown that roadside slopes and other site constraints often restrict the use of flared barrier terminals. Thus, it is desirable to design the guardrail terminal so that it can be used on a tangent.

Costs associated with the terminal are also a major consideration. Most guardrail installations are rarely, if ever, struck, and the benefits of even greatly improved impact performance are often not sufficient to justify the higher terminal costs (*10*). Past experience has shown that high construction and maintenance costs have prevented widespread implementation of a number of crashworthy barrier terminals.

In view of the information just presented, the primary objective of the research described here was to develop a box-beam guardrail terminal that could offer the following features:

- Meet nationally recognized safety standards (*9*),
- Provide attenuation for vehicles striking the barrier end,
- Provide safe impact performance when installed on a tangent section of guardrail,
- Be inexpensive to install and maintain, and
- Be simple to construct.

D. L. Sicking, Midwest Roadside Safety Facility, University of Nebraska-Lincoln, Lincoln, Nebr. 68588. K. K. Mak, Texas Transportation Institute, Texas A&M University, College Station, Tex. 77843-3135. W. B. Wilson, Engineering Services, Wyoming Department of Transportation, 5300 Bishop Boulevard, Cheyenne, Wyo. 82002.

TELESCOPING TUBE TERMINAL CONCEPT

Box-beam guardrails are weak-post barrier systems that are commonly used in regions that receive heavy snow. The barrier uses 6-in. × 6-in. × 3/16-in. (152-mm × 152-mm × 4.8-mm) structural steel tubing as a longitudinal rail element. The rail is mounted on S3×5.7 steel posts spaced 6 ft (1.83 m) apart. The structural steel tube gives the rail element a relatively high bending strength, whereas the weak steel posts allow large lateral deflections. The telescoping tube terminal concept involves placing an oversized outer tube on the end of the standard box-beam rail element. An impact head is placed in front of the outer tube to capture the striking vehicles. During end-on or low-angle impacts, the impact head would capture the vehicle and the outer tube will telescope back over the box-beam rail element. Energy absorbers, placed inside the outer tube, are crushed as the system telescopes down and thereby provide a controlled deceleration for vehicles. For head-on impacts at higher angles, the system would initially capture the vehicle. However, as the terminal telescopes back, the vehicle would push the barrier end to the side. Eventually, lateral loads in the terminal would become sufficient to bend the outer rail element and allow the vehicle to pass behind the barrier. Also, the terminal must be designed to provide adequate tensile capacity for the box-beam guardrail to successfully redirect vehicles impacting the side of the barrier. Thus, the terminal system must be capable of transmitting high tensile loads while having low compressive strength.

ENERGY ABSORBERS

The energy absorber must be efficient in terms of both the energy dissipated per unit volume of material and the ratio between initial and crushed absorber length. First, there is very limited space inside the telescoping outer tube. Second, there is a practical limit to the length of the telescoping outer tube before the weight would become prohibitive to safely accommodate impacts of small passenger cars. If the energy dissipation per unit volume of material is too low, the terminal would require too long a crush distance to bring large passenger cars to a safe stop. Similarly, if the ratio between initial and crushed absorber lengths is too low, the required length of the telescoping tube would also be excessive. Theoretically, an energy-absorbing terminal must deflect at least 16 ft (4.88 m) during head-on impacts to meet current crash test standards. The energy absorber must be capable of nearly 100 percent compression to avoid an excessive length for the telescoping tube.

After an extensive search for available energy-absorbing materials, the research team decided on pultruded fiber-reinforced plastic (FRP) as the energy absorber for use with the telescoping tube terminal. Numerous pultruded FRP structural shapes were obtained in different sizes and were tested to identify the most efficient energy-absorbing configurations. Static crush testing was used as a preliminary screening process. A dynamic testing program was then undertaken to identify both the dynamic crush characteristics of the FRP material and the dynamic buckling characteristics of the structural shapes.

Testing results indicated that round tubes provided greater energy dissipation per unit volume of material than any other shape, and thus, round tubes were selected for use in the telescoping tube terminal. It was also found that buckling of the tube became a problem for small-diameter tubes. It was therefore decided to use the largest-diameter tube possible, that is, 6 in. (152 mm) in diameter, and to control for the energy-absorbing characteristics by using different wall thicknesses for the tubes. Also, it was found that the FRP material is capable of developing very high compressive stresses before crush initiates. Tulip-shaped ends were incorporated as crush initiation mechanisms to eliminate these high initial crush forces, as shown in Figure 1.

TERMINAL DESIGN

Schematic drawings of the telescoping tube terminal are shown in Figure 1. A specially fabricated 7-in. × 7-in. × 1/8-in. (178 × 178 × 3.2-mm) A36 steel outer tube weighing approximately 310 lb (141 kg) is incorporated into the design. The tube is manufactured from two bent plates and is welded along two corners with a series of 3-in. (76-mm) welds spaced 6 in. (152 mm) center to center. Each end of the tube is strengthened with continuous welds and outer collars to limit terminal damage during low-speed impacts. The upstream end of the outer tube incorporates 24-in. (0.61-m) continuous welds and a 6-in. (152-mm)-wide, 1/4-in. (6.4-mm)-thick A36 steel collar, whereas the downstream end is constructed with a similar collar that is only 2 in. (51 mm) wide.

The impact head is designed along the lines of the ET-2000 impact head and weighs approximately 125 lb (57 kg). The impact plate, as shown in Figure 1, is constructed with a 20-in. × 20-in × 3/8-in. (508-mm × 508-mm × 9.5-mm) A36 steel and incorporates 1 1/2-in. × 1/4-in. (38.1-mm × 6.4-mm) A36 steel straps welded on the perimeter of the plate to provide a mechanical interlock with impacting vehicles. The impact plate is attached with 3/8-in. (9.5-mm)-thick A36 steel gussets to a 3-ft (0.91-m)-long section of standard TS 6-in. × 6-in. × 3/16-in. (152-mm × 152-mm × 4.8-mm) A500 grade B steel tube normally used in box-beam guardrails. An end cap made from a 1/8-in. (3.2-mm)-thick steel plate is welded to the end of the box-beam section. The end of the 6-in. × 6-in. × 3/16-in. (152-mm × 152-mm × 4.8-mm) tube is enlarged to provide a closer fit inside the outer tube by welding 1/4-in. (6.4-mm) steel straps to all four sides. This reduces the clearance between the inner and outer tubes to approximately 1/8 in. (3.2 mm) on all sides. If the inner tube is inserted 1 ft (0.31 m) into the outer tube, this level of tolerance would allow only a 1.2-degree misalignment between the two tubes. The upstream end of the box-beam rail and both ends of the intermediate spacer blocks are treated in a similar fashion to minimize the possibility of rotation within the outer tube.

Preliminary testing indicated that the gusset plates on the impact head could cut through the end of the outer tube, causing severe damage, even under moderate impact conditions. Therefore, steel angles with 1 1/2-in. (38-mm)-thick rubber pads are welded to the sides of the TS 6-in. × 6-in. × 3/16-in. (152-mm × 152-mm × 4.8-mm) tube to prevent direct contact between the gusset plates and the outer tube. The rubber pads reduce both the impact forces transmitted to the vehicle when the impact head contacts the outer tube and the damage to the outer tube during low- and moderate-speed impacts.

The impact head is designed to be attached to a 5.5-in × 7.5-in. (140-mm × 191-mm) breakaway wood post similar to that used in breakaway cable terminals (BCTs). The wood post is weakened with a 2 3/4-in. (69.9-mm)-diameter hole at the base and is inserted into a 6-in. × 8-in. (152-mm × 203-mm) steel foundation tube. A BCT-type cable assembly is attached to the outer tube using a

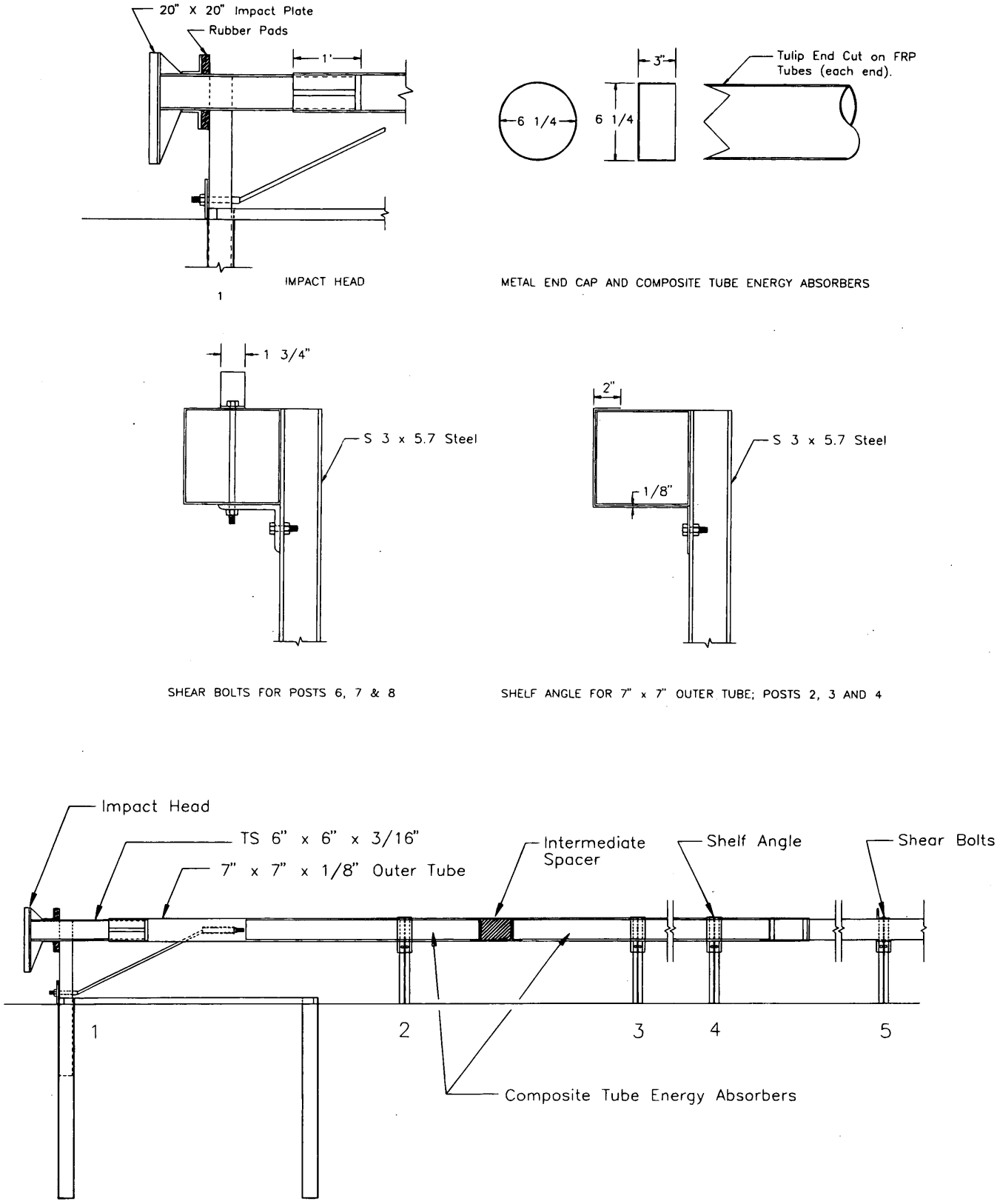

FIGURE 1 Telescoping tube terminal.

TS 2½-in. × 2½-in. × 3/16-in. (63.5-mm × 63.5-mm × 4.8-mm) steel tube welded to the outer surface. The BCT cable is anchored through the hole in the base of the leading wood post. A second steel foundation tube with ground channel strut is incorporated to reinforce the foundation tube under the first post.

The outer tube transmits tension to the downstream box-beam rail through a breakaway tensile connector, similar in design to that used with the ET-2000 guardrail terminal. Six lugs with teeth in one direction and sloped surfaces in the other direction are welded to the top of a 3-in. × 2-in. × 3/16-in. (76.2-mm × 50.8-mm × 4.8-mm) × 16¾-in. (435-mm)-long structural tubing. Corresponding holes were cut on the bottom of the TS 6-in. × 6-in. × 3/16-in. (152-mm × 152-mm × 4.8-mm) box beam for the lugs to engage. The detachable anchor mechanism is then attached to the outer tube with a 1¼-in. (32-mm)-diameter grade 5 all-thread rod and a 6-in. (152-mm)-long 2-in. × 2-in. × 3/16-in. (50.8-mm × 50.8-mm × 4.8-mm) structural tube welded to the bottom of the outer tube. The lugs on the detachable anchor mechanism are designed to release from the holes in the box-beam rail when the device is loaded in compression during end-on impacts. During side impacts, the anchor mechanism is loaded in tension and the steel lugs do not release from the box-beam rail, thereby preventing the two telescoping beams from becoming separated.

Except for the initial wooden breakaway post, all other posts are constructed from the S3 × 5.7 structural steel normally used with box-beam guardrails. However, in order to facilitate telescoping of the outer tube over the standard box-beam rail, special shelf angles are used with the outer tube, as shown in Figure 1. The shelf angles provide some constraint of the outer tube without the need for passing a bolt though the beam. Also, the first post downstream from the outer tube (Post 5) is not bolted to the standard box-beam rail. The next three posts (Posts 6, 7, and 8) in the system incorporate a 5/16-in. (7.9-mm)-diameter A307 bolt and a small clip angle at the top of the beam, as shown in Figure 1, to facilitate consistent shearing of the bolted connections during head-on impacts.

Energy dissipation elements were selected and configured, using a combined conservation of energy and momentum approach, to provide optimum safety performance for the terminal during head-on impacts. The final design incorporates a 6-ft (1.83-m)-long, 6-in. (152-mm)-diameter, ⅛-in. (3.2-mm)-wall-thickness tube at the front of the cushion to provide low-energy dissipation during small-car impacts and a 12 ft 8 in. (3.86 m)-long, 6-in. (152-mm)-diameter, ¼-in. (6.4-mm)-wall-thickness tube at the back of the terminal to provide sufficient energy-absorbing capability to handle large-car impacts.

This configuration provides for approximately 2 ft 4 in. (0.71 m) of empty space within the telescoping outer tube. This empty space provides for a low deceleration period during the time that the impact head and outer tubes are being accelerated to the speed of the vehicle. The thin-walled energy absorber also is provided with a 6-in. (152-mm)-long tulip crush initiator at each end to further delay the onset of high decelerations associated with crushing the full FRP section. Photographs of the completed terminal are shown in Figure 2.

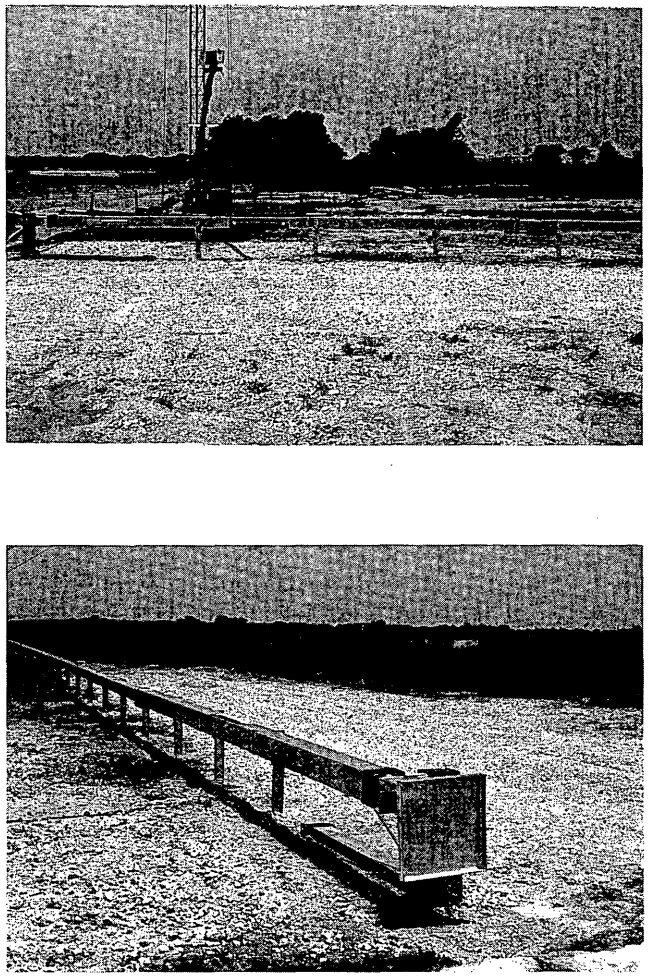

FIGURE 2 Completed telescoping tube terminal.

COMPLIANCE TESTING

NCHRP Report 230 (*9*) requires four full-scale crash tests of barrier terminals. Two of the tests are designed to study the head-on impact performance of the end treatment, and the remaining two tests investigate the redirective capacity of the barrier near the end of the terminal. The telescoping tube terminal successfully passed all four of the recommended crash tests, as summarized in Table 1 and described in the following sections.

Small-Car Head-On Test

The first compliance test involved an 1,800-lb (817-kg) passenger car striking the terminal head-on at a speed of 58.1 mph (93.5 km/hr). The vehicle was offset from the barrier centerline approximately 15 in. (381 mm) from the center of the terminal away from the roadway. This orientation will cause the vehicle to rotate counterclockwise toward the back of the rail and allow the telescoping tubes to buckle outward away from the barrier posts. Thus, offsetting the vehicle to the backside of the rail should maximize the potential for rail buckling and test failure. On impact the leading wooden post fractured and the cable anchor mechanism released as designed. The impact head was then pushed back until it contacted the outer tube. The vehicle was smoothly decelerated until it was virtually stopped. The vehicle then began to yaw counterclockwise as expected, and the outer tube began to bend at the point where the impact head section terminated. The vehicle was slowed to almost a complete stop by the time the vehicle released from the terminal. Note that the impact conditions for this test are designed to cause the

TABLE 1 Full-Scale Crash Test Results

Vehicle Weight, lb (kg)	Impact Conditions			Test Results				
	Speed, mph (kph)	Angle, (degrees)	Offset, in. (mm)	Maximum Deflection, ft (m)	Occupant Impact Velocity		Ridedown Acceleration	
					Long. ft/s (m/s)	Lateral ft/s (m/s)	Long. (g's)	Lateral (g's)
1,800 (817)	58.1 (93.5)	0	15 (381)	8.9 (2.7) (long.)	32.5 (9.9)	4.0 (1.2)	15.3	2.4
4,500 (2,041)	58.0 (93.3)	0	0	15 (4.6) (long.)	25.5 (7.8)	5.5 (1.7)	11.1	1.1
1,800 (817)	62.3 (100)	20.7	0	2.2 (0.7) (lat.)	21.6 (6.6)	17.7 (5.4)	7.1	9.7
4,500 (2,041)	61.7 (99.3)	25.3	0	6.5 (2.0) (lat.)	13.6 (4.2)	11.4 (3.5)	4.5	8.1

vehicle to spin out and possibly roll over. Since the telescoping tube terminal effectively attenuated virtually all of the impact energy, the vehicle remained stable and upright after leaving the terminal.

As shown in Table 1, all occupant risk values for this test were well below maximum allowable levels. Damage to the test vehicle and the telescoping tube terminal was relatively severe, as shown in Figure 3. Vehicle damage was localized to the grill and engine compartment, with no deformation of the occupant compartment. Terminal repair would have required replacement of the outer tube, FRP energy absorbers, and the first five posts.

Large-Car Head-on Test

The second compliance test was designed to evaluate terminal performance during high-speed, head-on impacts with full-size automobiles. This test involved a 4,500-lb (2,041-kg) vehicle striking the terminal head-on at a speed of 58 mph (93.3 km/hr). The terminal again performed as designed, and the test vehicle was smoothly decelerated to a stop over a distance of 15 ft (4.57 m). The test vehicle was slightly offset toward the roadside, and as a result the vehicle slowly yawed counterclockwise during the test, thereby producing some eccentricity in the telescoping tube. As the vehicle was slowing to a stop, the outer tube began to buckle. This behavior did not increase the vehicle deceleration rate and is merely an indication that the FRP crush forces are high enough to allow global buckling of the outer box beam if sufficient eccentricity is introduced. The outer tube would have continued to telescope over the inner tube if the vehicle had maintained sufficient energy to crush the FRP elements. Also note that approximately 3 ft (0.91 m) of usable energy absorber remained in the telescoping tube after the test and that this section of energy absorber could have absorbed almost 100 kip-ft (135.5 kJ) of additional energy. Thus, the terminal would have been able to successfully attenuate an impact with significantly higher impact energy without a significant increase in deceleration forces, and the difference between the actual impact severity of 505 kip-ft (684 kJ) and the target value of 541 kip-ft (733 kJ) is not considered to be significant.

All occupant risk values for this test were well within the recommended limits, as shown in Table 1. Damage to the vehicle, shown if Figure 4, was again isolated to the front and engine compartment areas. Damage to the telescoping tube terminal was not significantly greater than that observed during the small-car test. The outer tube was severely damaged and would require replacement. The FRP

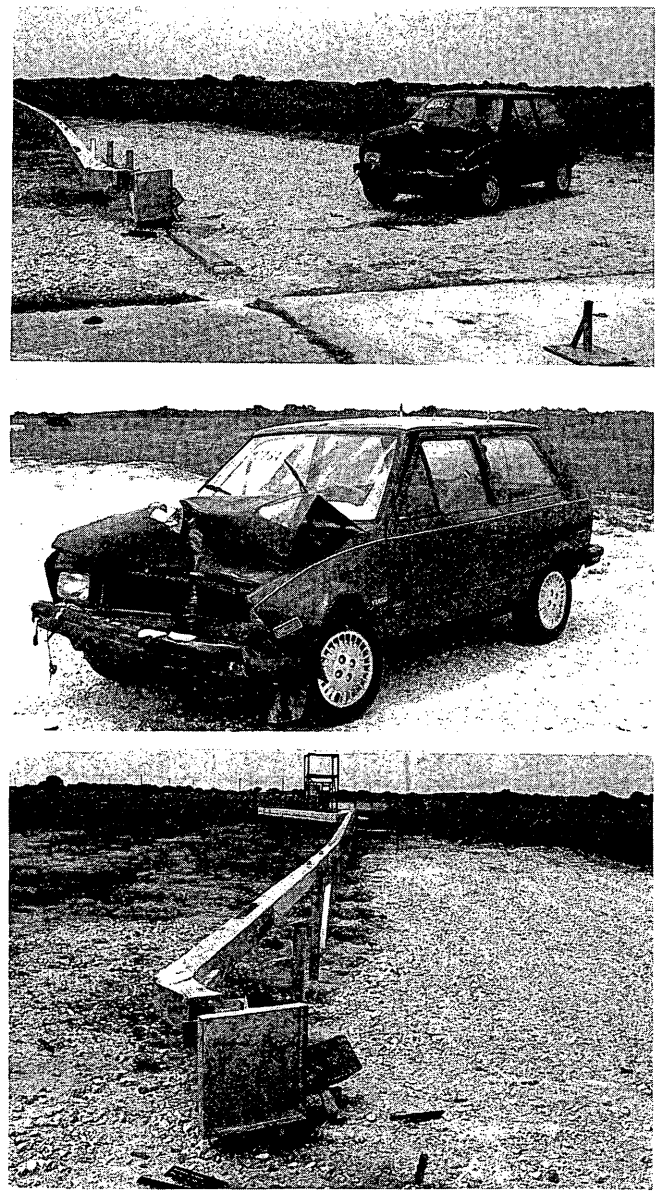

FIGURE 3 Damaged test vehicle and terminal after small-car head-on test.

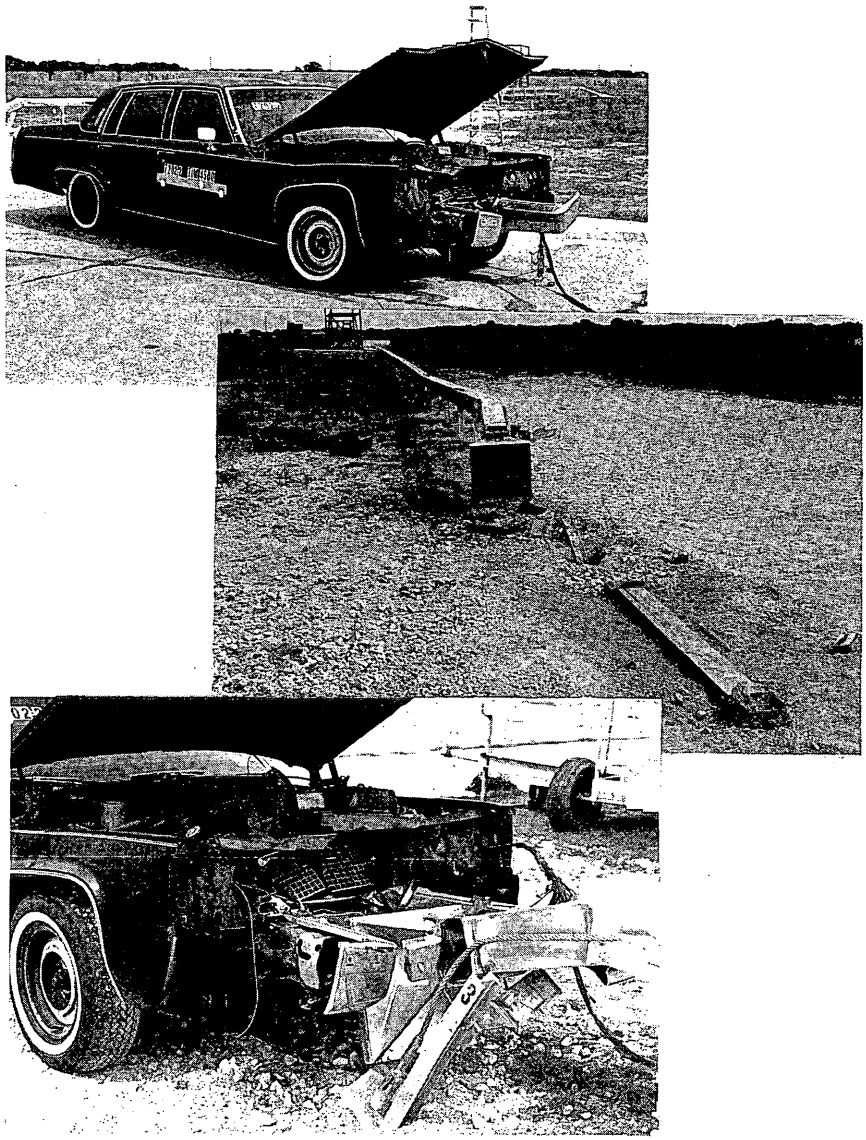

FIGURE 4 Damaged test vehicle and terminal after large-car head-on test.

energy absorbers and the first seven posts would also have required replacement.

Small-Car Redirection Test

The third compliance test was intended to evaluate the ability of the terminal to redirect small cars impacting the side of the terminal upstream from the beginning of the LON. The impact point, just upstream of Post 2, was halfway between the end of the terminal and the beginning of the LON at Post 3. The 1,800-lb (817-kg) test vehicle struck the terminal at a speed of 62.3 mph (100.3 km/hr) and an angle of 20.7 degrees. Terminal performance was very similar to that of a standard box-beam guardrail. The rail deflected sufficiently to allow the steel guardrail posts to contact the right from tire of the vehicle. The snag forces and rail redirection forces counterbalanced to cause the vehicle to slide down the rail without yawing away from the barrier. The test vehicle came to rest 150 ft (45.7 m) downstream from the original impact point and approximately 4 ft (1.2 m) in front of the rail.

All occupant risk values for this test were again within recommended limits, as shown in Table 1. Test vehicle and barrier damage were relatively minor for a test of this severity, as shown in Figure 5. Test vehicle damage was distributed along the passenger side of the vehicle, with the worst areas concentrated at the right front quarter panel. Terminal repair would again require replacement of the outer tube element, the FRP attenuation elements, and six steel guardrail posts.

Large-Car Redirection Test

The final compliance test was configured to examine the terminal's capacity for redirecting a vehicle at its designed containment limit. This test involved a 4,500-lb (2,041-kg) vehicle impacting the barrier at Post 3, the beginning of LON, at a speed of 61.7 mph

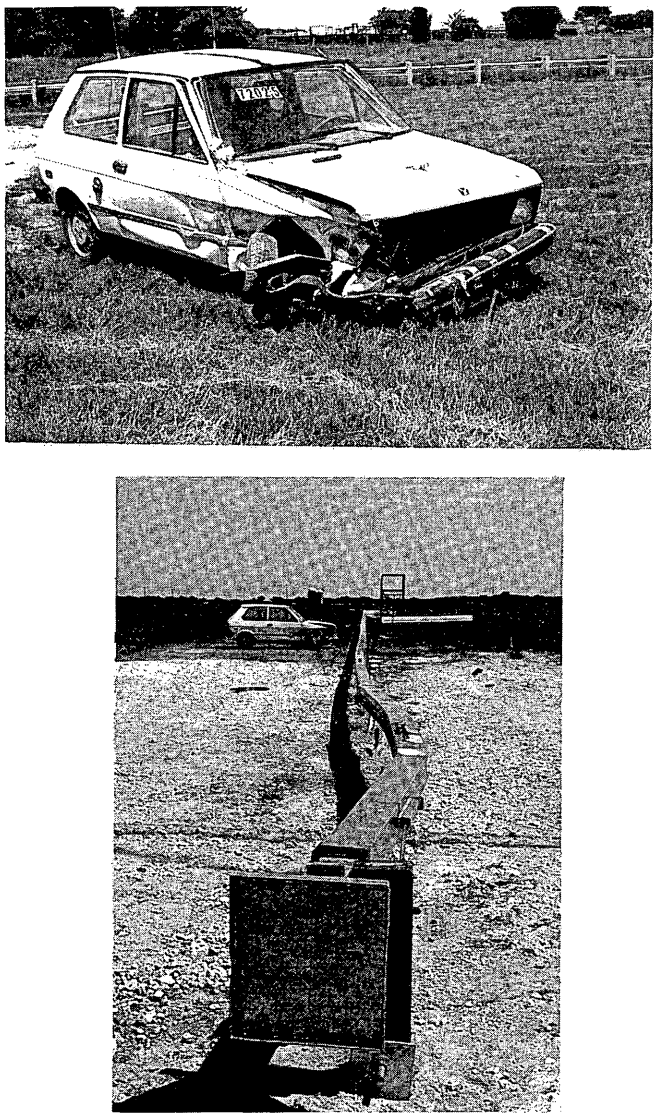

FIGURE 5 Damaged test vehicle and terminal after small-car redirection test.

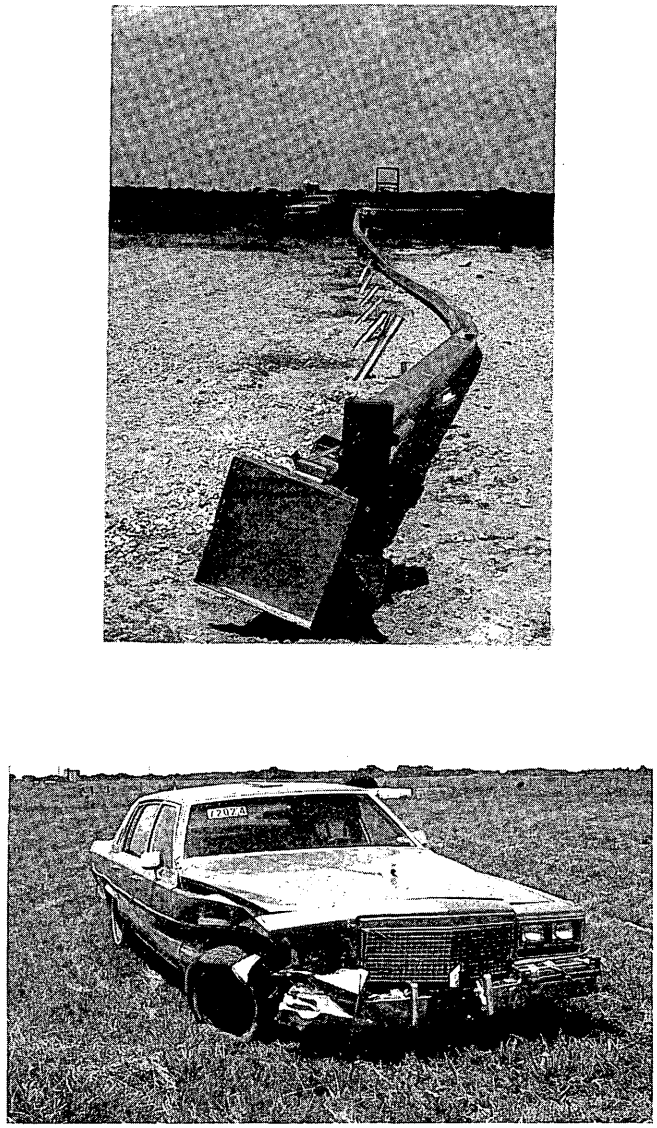

FIGURE 6 Damaged test vehicle and terminal after large-car redirection test.

(99.3 km/hr) and an angle of 25.3 degrees. The terminal again performed in a manner similar to that of a standard box-beam guardrail in smoothly redirecting the test vehicle. The test vehicle remained in contact with the rail until it came to rest approximately 145 ft (44.2 m) from the initial point of impact. Although the impact head became detached from the leading post, the breakaway cable mechanism proved to have the strength necessary to provide adequate anchorage for the barrier system.

All occupant risk values were well below recommended values, and the vehicle damage was relatively light, as shown in Figure 6. The barrier system would have required replacement of the outer tube, FRP energy absorbers, and approximately 20 guardrail posts.

CONCLUSIONS AND RECOMMENDATIONS

The telescoping tube terminal for use with box-beam guardrail has been shown to satisfy the requirements set forth in *NCHRP Report 230* (*9*). The system is designed to capture a vehicle striking the end of the terminal and to decelerate it to a safe and controlled stop rather than allowing the vehicle to penetrate behind the barrier at a high rate of speed. Furthermore, the system is designed to be installed tangent to the guardrail and can be used at sites where flared treatments are inappropriate. This terminal should perform well wherever there is sufficient space for it to be constructed either tangent or nearly tangent to the barrier system. Note that the terminal is approximately 50 ft (15.2 m) long. This section of the barrier must be installed along a straight line with no curvature.

Although production and installation costs are extremely difficult to quantify, terminal production costs are estimated to be in the range of $2,000 to $2,500 and installation costs should be less than $500. In addition, even though this terminal is somewhat more costly and more complicated to construct than existing sloped-end treatments, these factors should not be major obstacles to field implementation of the terminal. In fact, since the terminal will eliminate the need for flaring the barrier end out of the clear zone, the total cost of using the new terminal can, in some cases, be lower than the cost of using long flared sections of barrier

with a conventional sloped-end treatment. Furthermore, note that although the initial cost of this terminal is comparable to that of the ET-2000 end treatment, it is much less expensive than other high-performance terminals such as the CAT, SENTRE, and BRAKEMASTER (*11*). Repair costs for this terminal, estimated from the head-on crash tests described herein, should be in the range of $1,250 to $1,500. These costs are also on the low end of the range for high-performance barrier terminals.

This terminal can easily be adapted for use as a median barrier end treatment with only minor modifications. These modifications would include (*a*) placing the first four posts (Posts 1 through 4) under the outer tube and the next four posts (Posts 5 through 8) under the standard section of 6-in. × 6-in. (152-mm × 152-mm) box-beam rail element instead of behind them and developing the appropriate attachment mechanisms, (*b*) developing a method for transitioning the 6-in. × 8-in. (152-mm × 203-mm) structural steel tube used in the box-beam median barrier to the 6-in. × 6-in. (152-mm × 152-mm) tube used for the box-beam guardrail, and (*c*) using a mechanism to accommodate reverse-direction impacts. Efforts to develop such a median barrier terminal are currently under way at the Texas Transportation Institute under the sponsorship of the WyDOT.

This telescoping tube terminal for box-beam guardrail has been approved by FHWA for field implementation, and WyDOT is in the process of incorporating this terminal design into some of its upcoming projects. Construction activities and accident histories will be monitored closely by WyDOT to identify any construction, maintenance, or safety problems associated with this terminal. Appropriate modifications to the terminal design will be incorporated, if necessary, to resolve the identified problems.

REFERENCES

1. *Roadside Design Guide*. AASHTO, Washington, D.C., 1988.
2. Griffin, L. I. *An Analysis of Accidents on Turndown Guardrail Ends in the State of Texas (1989)*. Final Report on Project 9901-H. Texas Department of Transportation, Austin, May 1991.
3. Sicking, D. L., A. B. Qureshy, and H. E. Ross, Jr. Development of Guardrail Extruder Terminal. In *Transportation Research Record 1233*, TRB, National Research Council, Washington, D.C., 1989.
4. Bronstad, M. E., et al. Crash Test Evaluation of Eccentric Loader Guardrail Terminals. In *Transportation Research Record 1065*, TRB, National Research Council, Washington, D.C., 1986.
5. Bronstad, M. E., et al. Crash Test Evaluation of Vehicle Attenuating Terminal (V-A-T). In *Transportation Research Record 1133*, TRB, National Research Council, Washington, D.C., 1987.
6. *SENTRE (Safety Barrier End Treatment)*. Certification Report. Energy Absorption Systems, Inc., Chicago, Ill., 1983.
7. Phillips, R. G., J. E. Bryden, and D. E. Herring. Box-Beam Terminals for Restricted Conditions. Report FHWA/NY/RR/88/144. Engineering Research Bureau, New York State Department of Transportation, Albany, June 1988.
8. Mak, K. K., and D. L. Sicking. *Development of End Terminal for Box-Beam Guardrail, Phase* I—*Feasibility Study*. Final Report. Project RF 71740. Texas Transportation Institute, Texas A&M University System, College Station, Jan. 1992.
9. Michie, J. D. *NCHRP Report 230: Recommended Procedures for the Safety Performance Evaluation of Highway Appurtenances*. TRB, National Research Council, Washington, D.C., March 1981.
10. Ross, H. E., Jr., et al. *Traffic Barriers and Control Treatments for Restricted Work Zones*. Final Report, NCHRP Project 17-8. Texas Transportation Institute, Texas A&M University System, College Station, Nov. 1992.
11. Ivey, D. L., M. E. Bronstad, and L. I. Griffin. Guardrail End Treatments in the 1990s. In *Transportation Research Record 1367*, TRB, National Research Council, Washington, D.C., 1992.