Yellow Pavement Markings with Yellow Nighttime Color

GREGORY F. JACOBS AND NORBERT L. JOHNSON

Human observers were used to assess the apparent nighttime color of a range of pavement marking products. A total of 24 different materials were viewed at night from an automobile using low-beam illumination with vehicle-to-target distances ranging from 12 to 36 m. The samples were viewed as isolated center lane lines with a parallel white edge line in place for all viewings. Observers rated the color on a scale of 1 to 5 from white to yellow. The results showed significant color differences between pavement marking materials. At shorter distances, more of the materials appeared yellow than at longer distances. At longer distances observer ratings showed greater separation of color distinction between the materials. Retroreflective color was measured at geometries corresponding to 12 and 36 m. Brightness did not appear to correlate with color. Color measurements for the different distances also showed the dependence of color on test conditions. Measured colors with a higher color saturation were reported by observers to have a more yellow appearance. Daytime and nighttime color are not the same. Some yellow pavement markings having acceptable daytime color were white in retroreflective color. Different "yellow" products can have varying nighttime color performance. The feasibility of specifying nighttime color using instrumental methods that can correlate with the human visual experience is demonstrated.

Yellow and white pavement markings are commonly used on roadways to display traffic lanes. A yellow pavement marking typically will have a different meaning to an automobile driver than a white pavement marking. For example, in the United States, a yellow pavement marking is used on a roadway to separate traffic lanes where the traffic moves in opposite directions, whereas a white pavement marking is used to mark the roadway's border at the shoulder and to separate traffic lanes where the traffic moves in the same direction (*1,2*). In many parts of Europe yellow pavement markings are used to indicate construction workzones or potentially hazardous driving situations. In view of these different functions, it is important that yellow and white pavement markings are discernible to automobile drivers, particularly at nighttime when visibility is limited.

With increased regulation to eliminate the use of lead-based pigments, the development of yellow traffic markings free of such "hazardous" colorants has received significant effort. It has been found that control of the reflective brightness (*3*) and nighttime color (*4*) in desirable ranges for yellow pavement markings using organic colorants is not trivial.

With the availability of pavement marking systems having varying reflective performance, the question of the reflective color of road surface markings providing safe and effective guidance has remained undefined. A part of this in-use appearance variability stems from the lack of meaningful measures of nighttime reflective color of pavement markings that correlate with what drivers see.

Traffic Control Materials Division, 3M Company, 553-1A-01 3M Center, St. Paul, Minn. 55144-1000.

The object of this work was to compare pavement marking materials that differ in their nighttime reflective performance using human observers and laboratory test methods for the measurement of nighttime color of retroreflective materials. The observer's color ratings of a range of markings at night were compared with color characterization obtained through photometric measurements of the marking materials.

FIELD OBSERVATION OF PAVEMENT MARKING COLOR

Seven color-normal human observers (based on Ishihara test results) were used to assess the apparent nighttime color of new unworn pavement marking materials with white and yellow daytime colors. All of the viewers had "normal" visual acuity and were licensed drivers in the state of Minnesota. Their ages were 27, 37, 38, 39, 48, 48, and 56 years. One viewer was a woman.

A total of 24 different pavement marking materials were viewed. Of these, five were white and the rest were yellow in daytime color. Each marking was applied to aluminum test panels 0.2 cm thick, 1.52 m in length, and 0.10 m in width. Leading edges of the test panels were masked with matte finish black tape.

Viewings were held in a parking lot well after dark on an overcast night. The pavement was recently surfaced black asphalt. Viewers were seated in a 1989 Pontiac Bonneville 4-door sedan with low-beam headlamps illuminated. The layout of the test area is indicated in Figure 1. Lane width for the viewing area was approximately 4 m. Samples were presented as isolated center lines 1.52 m in length and 0.10 m in width. A length of white pavement marking 12 m in total length was present as a right edge line beginning 9 m closer to the vehicle than the test sample area and continuing 1.5 m beyond it throughout the viewing experiment as a control reference. Vehicle-to-target distances were 12, 24, and 36 m (one to three skip lengths in front of the vehicle).

Before beginning the test, observers in the vehicle were allowed to view five different samples spanning the range of colors in the experiment from white to yellow for about 30 sec to develop an idea of the range of colors they would see during the test. The white edge line control was in full view during this learning period. The viewers were instructed that they would be presented with an isolated centerline marking for a period of 2 to 3 sec. After viewing the sample they would be asked to rate the night color of the sample from 1 to 5, with 1 being white and 5 being yellow. Each viewer had a response form on which, after making a color judgment, they circled the rating number adjacent to the sample number. They would then be presented with another sample and continue through the sample set until the test was completed.

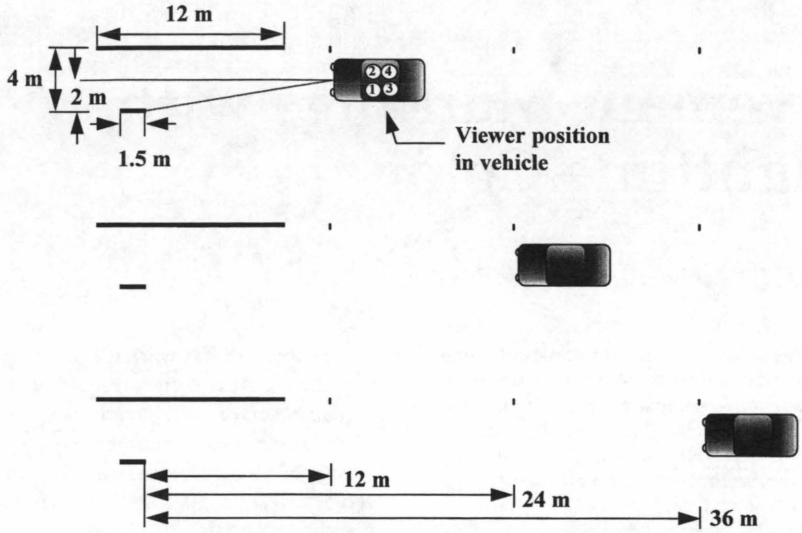

FIGURE 1 Night viewing experiment layout.

During the actual field observations, the test samples were presented to the viewers in the vehicle for the same period of 2 to 3 sec. Twenty-two of the materials were viewed twice and two were viewed three times each for each of three vehicle-target distances. Sample viewing order was randomized. No sample was viewed twice in a row. The overall data collection included 1,050 points [(22 × 2 + 2 × 3) samples × 3 distances × 7 observers].

Figure 2 shows a set of histograms of the distribution of observer night color rating responses for one of the yellow products, *T,* at each of the three viewing distances. Figure 3 shows a similar data set for a white marking material, *A*. Figure 4 shows observer night color rating data for another yellow marking, *X*. It can be seen that the distribution of observer night color rating and the effects of viewing distance for sample *X* differ from the response for sample *T* shown in Figure 2.

Figure 5 shows the mean observer night color ratings for each product at each distance. Samples A through E had white daytime color, whereas samples F through X had yellow daytime color. Table 1 presents the mean observer color rating for each marking material at each of the viewing distances and a pooled standard deviation for each distance.

Significant differences among the marking materials were observed. Distance had an effect on the apparent night color of the pavement markings. At shorter distances, more of the materials appeared yellow than at longer distances. At longer distances, there was greater separation of color distinction between the materials. Also, at longer distances, yellow materials were rated less yellow and white materials were rated less white than at shorter distances. No effect of position in the vehicle or of an individual viewer (of those with normal color vision) on apparent color could be determined in this experiment.

DETERMINATION OF TEST GEOMETRY

The laboratory test measurement geometries were calculated to correspond with 12- and 36-m viewing distances from the Pontiac Bonneville. The vehicle-observer-sample geometries were calculated

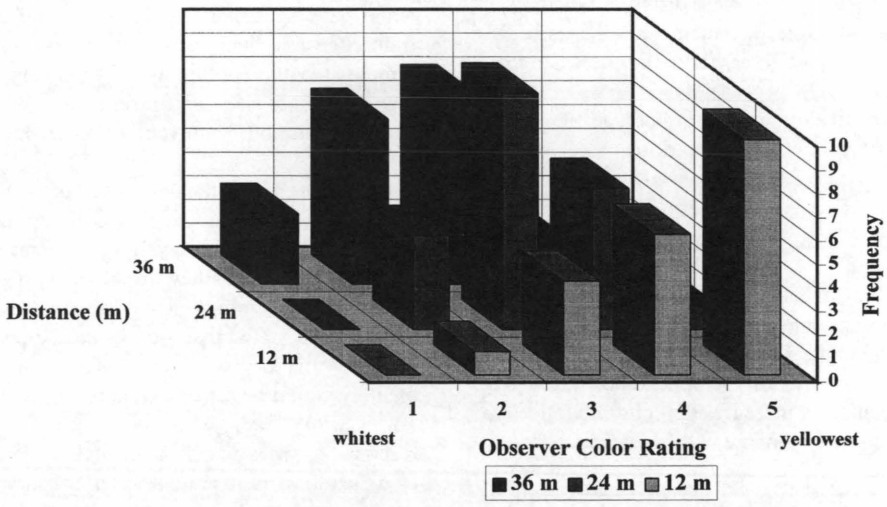

FIGURE 2 Night color of T.

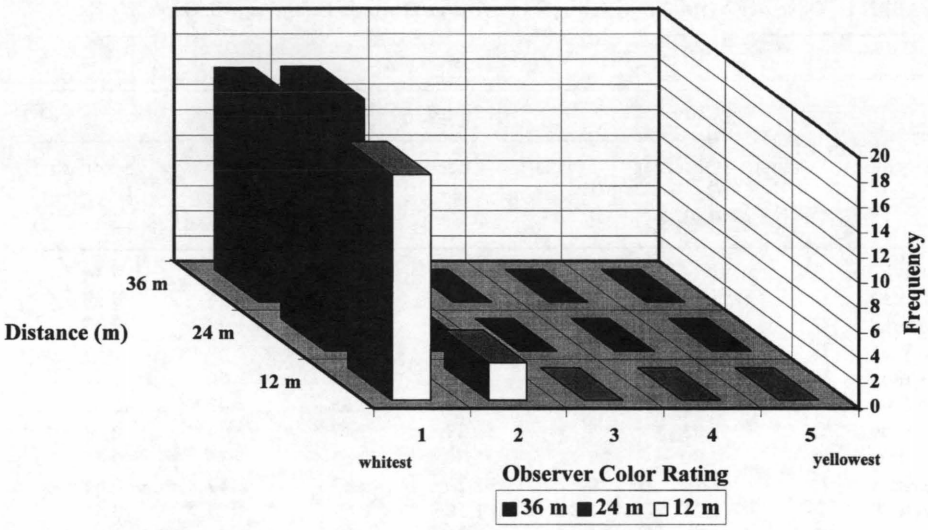

FIGURE 3 Night color of A.

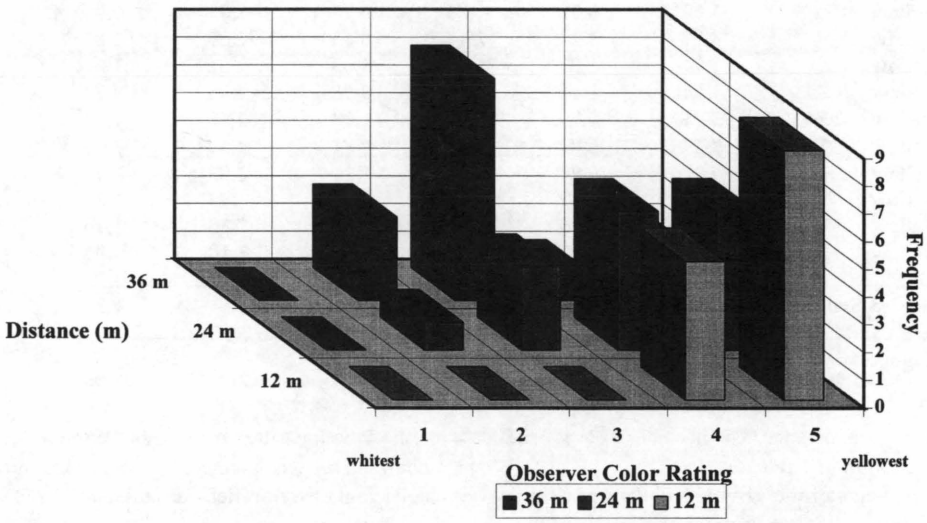

FIGURE 4 Night color of X.

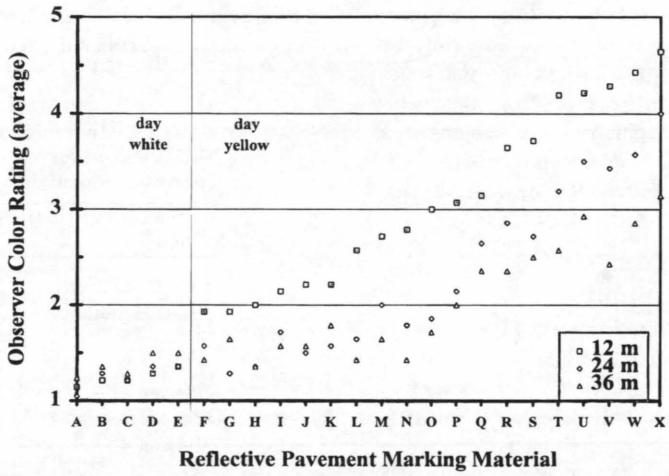

FIGURE 5 Observer night color rating by material.

TABLE 1 Observer Night Color Ratings of Pavement Marking Products A through X

		Distance From Vehicle to Marking					
		12 m		24 m		36 m	
Daytime Color	Product	Observer Color Rating	Standard Deviation	Observer Color Rating	Standard Deviation	Observer Color Rating	Standard Deviation
white	A	1.14	0.36	1.05	0.22	1.24	0.44
white	B	1.21	0.43	1.29	0.47	1.36	0.50
white	C	1.21	0.43	1.21	0.43	1.29	0.47
white	D	1.29	0.47	1.36	0.50	1.50	0.65
white	E	1.36	0.63	1.36	0.50	1.50	0.52
yellow	F	1.93	0.73	1.57	0.65	1.43	0.65
yellow	G	1.93	0.73	1.29	0.47	1.64	0.63
yellow	H	2.00	0.78	1.36	0.63	1.36	0.50
yellow	I	2.14	0.77	1.71	0.83	1.57	0.65
yellow	J	2.21	0.80	1.50	0.52	1.57	0.65
yellow	K	2.21	0.80	1.57	0.76	1.79	0.70
yellow	L	2.57	0.85	1.64	0.74	1.43	0.65
yellow	M	2.71	0.83	2.00	0.68	1.64	0.93
yellow	N	2.79	0.98	1.79	0.70	1.43	0.65
yellow	O	3.00	0.88	1.86	0.77	1.71	0.91
yellow	P	3.07	1.27	2.14	0.53	2.00	0.88
yellow	Q	3.14	1.03	2.64	0.63	2.36	1.01
yellow	R	3.64	1.15	2.86	0.95	2.36	0.74
yellow	S	3.71	0.99	2.71	1.07	2.50	1.16
yellow	T	4.19	0.93	3.19	0.81	2.57	1.03
yellow	U	4.21	0.98	3.50	1.29	2.93	1.07
yellow	V	4.29	0.83	3.43	0.76	2.43	1.28
yellow	W	4.43	0.65	3.57	0.85	2.86	1.10
yellow	X	4.64	0.50	4.00	0.96	3.14	0.95
Pooled Standard Deviation			0.81		0.73		0.81

Color Ratings: 1 = Whitest, 5 = Yellowest

for all observer positions at each distance. The in-vehicle coordinate system measurements are found in Table 2.

On the basis of measurements of the vehicle and driver position and the spatial layout of the viewing experiment, the angles of illumination and observation were calculated as indicated in Figure 6. The angles corresponding to each viewing condition are shown in Table 3.

For purposes of simplification of the geometries for color measurements, a two-dimensional approach was used, ignoring the effects of presentation and orientation angle and assuming left headlight illumination and viewing from the driver position of the vehicle. With these simplifications, the geometry corresponding to a viewing distance of 12 m was 87.0 degree entrance angle/1.5-degree observation angle and for 36 m, 89.0 degree entrance angle/0.7 degree entrance angle.

LABORATORY MEASUREMENT OF NIGHTTIME BRIGHTNESS OF PAVEMENT MARKINGS

Assessment of the nighttime brightness in the laboratory is usually through measurement of the coefficient of retroreflected luminance, R_L, using the test method described in ASTM D-4061. This is also described as the relative method in CIE Publication 54 (*5*). In this method the measured quantities are the reflected light, m_r, the incident light, m_i, the distance, d, and the area of the test surface, A. The coefficient of retroreflected luminance is determined by the following equation:

$$R_L = m_r d^2 / (m_i A \cos v) \quad (1)$$

The viewing angle, v, is the angle between the direction of observation and the specimen normal.

TABLE 2 In-Vehicle Coordinate System Measurements for 1989 Pontiac Bonneville Four-Door Sedan

	X	Y	Z
Left Headlamp	0.0	-0.635	0.635
Right Headlamp	0.0	0.635	0.635
Viewer 1	2.235	-0.508	1.143
Viewer 2	2.235	0.508	1.143
Viewer 3	2.997	-0.508	1.143
Viewer 4	2.997	0.508	1.143

measurements are reported in meters

Step 1. Measure Relative Spectral Values of Incident Radiation.

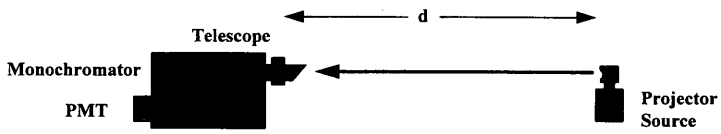

Step 2. Measure Relative Spectral Values of Reflected Radiation.

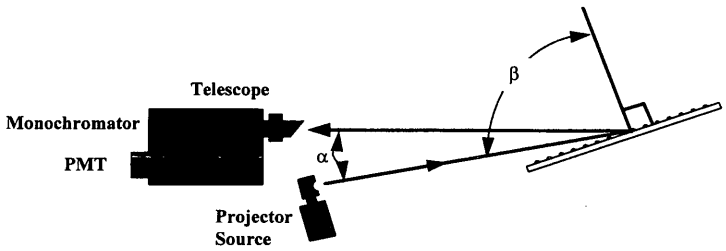

FIGURE 6 Diagram of relative method for measurement of nighttime color.

LABORATORY MEASUREMENT OF NIGHTTIME COLOR OF PAVEMENT MARKINGS

Measurement of the nighttime color (NTC) using the direct spectral method (ASTM E 811-936) is similar to the procedure for measurement of the coefficient of luminance, R_L, using the relative method (*5*). However for NTC, a telespectroradiometer is used and the measurements can be made with an uncalibrated source. Figure 7 shows a diagram of the NTC measurement method. The spectral distribution of the incident light was measured at 10-nm intervals. Then the spectral distribution of the retroreflected light from pavement marking materials was also measured at 10-nm intervals. Averages of multiple scans and a shortened measurement distance of 6 m were required because of the relatively low level of energy available.

Calculation of the spectral coefficient of luminous intensity as a function of wavelength, λ, was as follows:

$$R_I(\lambda) = \frac{m_r(\lambda)\, d^2}{m_i(\lambda)} \tag{2}$$

where

m_r = the reflected spectral value,
m_i = the incident spectral value, and
d = the test distance.

TABLE 3 Calculated Observation and Entrance Angles for Night Viewing Conditions for Leading and Trailing Ends of Test Sample Illuminated by Left and Right Headlamps Viewed from Each Viewer Position at Each Distance

		Observation Angle (deg)				Entrance Angle (deg)			
		left		right		left		right	
Distance	Viewer	begin	end	begin	end	begin	end	begin	end
12.2 m	1	1.61	1.48	6.47	5.71	87.0	87.4	87.1	87.4
	2	3.79	3.55	2.79	2.41	87.0	87.4	87.1	87.4
	3	1.52	1.38	6.70	5.90	87.0	87.4	87.1	87.4
	4	3.26	3.11	3.10	2.65	87.0	87.4	87.1	87.4
24.4 m	1	0.97	0.92	3.11	2.92	88.5	88.6	88.5	88.6
	2	2.38	2.27	1.24	1.16	88.5	88.6	88.5	88.6
	3	0.90	0.86	3.17	2.98	88.5	88.6	88.5	88.6
	4	2.22	2.23	1.29	1.20	88.5	88.6	88.5	88.6
36.6 m	1	0.69	0.67	2.04	1.95	89.0	89.0	89.0	89.0
	2	1.71	1.65	0.81	0.78	89.0	89.0	89.0	89.0
	3	0.66	0.64	2.07	1.98	89.0	89.0	89.0	89.0
	4	1.63	1.58	0.82	0.79	89.0	89.0	89.0	89.0

"begin" indicates the end of the test sample closest to the vehicle.
"end" indicates the end of the test sample farthest away from the vehicle

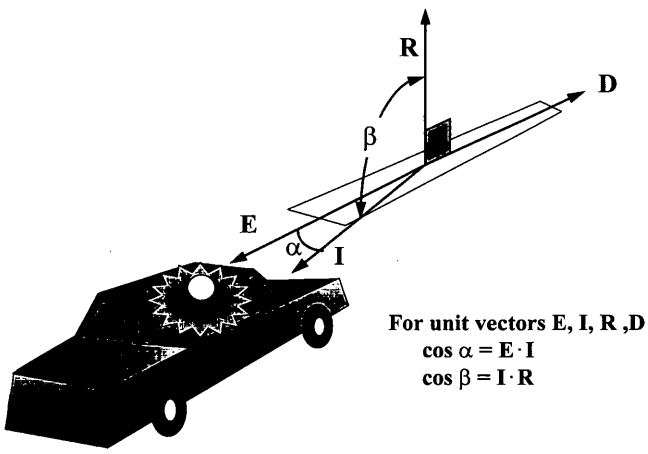

FIGURE 7 Calculation of observation angle and entrance angle.

Calculation of tristimulus values was as follows:

$$X = k \int_\lambda S(\lambda)R_l(\lambda)\bar{x}(\lambda)d\lambda \quad (3)$$

$$Y = k\int_\lambda S(\lambda)R_l(\lambda)\bar{y}(\lambda)d\lambda \quad (4)$$

$$Z = K \int_\lambda S(\lambda)R_l(\lambda)\bar{z}(\lambda)d\lambda \quad (5)$$

These calculations use the usual symbols of CIE Publication 15.2 (*6*) using Illuminant A and the 2 degree observer.

PHOTOMETRIC DATA

Figure 8 shows an example of the spectral retroreflectance curve of a yellow pavement marking (Sample V) with yellow nighttime color and a marking (Sample A) with white nighttime color for test samples measured at the 36-m geometry. The chromaticity coordinates for the retroreflected light when this material is illuminated using standard Source A are $x = 0.511$, $y = 0.447$ for the yellow and $x = 0.452$, $y = 0.413$ for the white marking. Illuminant A falls at $x = 0.448$, $y = 0.407$ on the CIE 1931 2 degree observer chromaticity diagram. Table 4 presents chromaticity coordinates of retroreflected light from Illuminant A and the coefficient of retroreflected luminance, R_L, at geometries corresponding to 12- and 36-m viewing distances for pavement markings rated for color in the night viewing experiment.

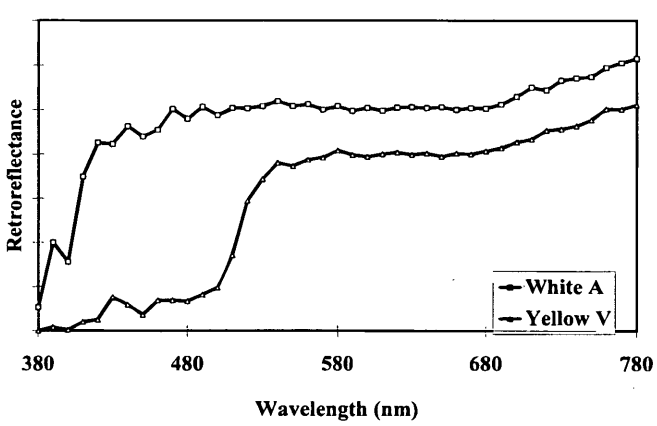

FIGURE 8 Example of spectral wavelength distribution of retroreflected light from white and yellow pavement marking.

CORRELATION OF VISUAL OBSERVATIONS WITH PHOTOMETRIC MEASUREMENTS

In Figure 9 the measured values of R_L of markings *A* through *X* are mapped onto the chromaticity coordinates for the data at 89.0 degree entrance/0.7 degree observation angles corresponding to a viewing distance of 36 m. The brightness of the pavement marking materials appears to be independent of the reflective color of the stripe.

Figure 10 shows the observer night color ratings from the viewing experiment at 36 m mapped onto chromaticity space at 89.0 degree entrance/0.7 degree observation angles. There appears to be a correlation between the color ratings of the observers and the measured chromaticities of retroreflected light from pavement markings. Markings with a higher color saturation, closer to the edge of chromaticity space, were rated to have a yellower appearance than white markings.

Figure 11 shows color value ratings from the viewing experiment at 12 m mapped onto chromaticity space at 87.0 degree entrance/1.5 degree observation angles. Again it is apparent that there is a correlation between the ratings of the observers with measured retroreflective chromaticities.

As noted earlier, viewing distance had an effect on the apparent color of the pavement markings, with more of the materials appearing yellow at shorter distances than at longer distances. Comparison of Figures 10 and 11 shows a measurable color shift with viewing condition. Some pavement markings become more "washed out" in visual appearance at farther distances. The chromaticities of the reflected light of these materials move closer to the chromaticity of the illuminant (i.e., they become more "white").

There were also yellow marking samples (daytime color) that received ratings close to those of the white materials, for example, marking samples *L* and *N* at 36 m. From Figure 5 it can be seen that the observer color ratings of some of the yellow markings are essentially the same as those for the white markings, particularly at farther distances. The chromaticities of the light retroreflected from these samples are in fact close to the chromaticity of the light source Illuminant A. It is possible to have markings with acceptable yellow daytime appearance, yet have a nighttime retroreflected color similar to white markings.

For perspective of the location of the nighttime retroreflected colors of the materials used in this study, the chromaticities at the 36-m geometry found in Table 4 are plotted in chromaticity space for the 1931 2 degree observer along with Illuminant A in Figure 12. Figure 13 indicates the same data plotted on the 1976 CIE u', v' diagram.

SUMMARY

Human observers were used to assess the apparent nighttime color of a range of pavement marking products. A total of 24 different materials were viewed at night from an automobile using low-beam illumination with vehicle-to-target distances ranging from 12 to

TABLE 4 Chromaticity and Coefficient of Retroreflected Luminance of Pavement Marking Products A through X

	Viewing Distance for Measurement Geometry					
	12 m			36 m		
	Chromaticity		R_L	Chromaticity		R_L
Product	x	y	(mcd/m²/lx)	x	y	(mcd/m²/lx)
A1	0.453	0.412	1120	0.452	0.412	937
A2	0.454	0.411	---	0.452	0.414	---
A3	0.454	0.412	---	0.454	0.416	---
A4	---	---	---	0.455	0.417	---
B	0.454	0.416	517	0.454	0.421	586
C1	0.443	0.406	353	0.440	0.406	376
C2	---	---	---	0.452	0.414	---
D	0.457	0.416	741	0.456	0.418	708
E	0.444	0.410	462	---	---	576
F	0.493	0.449	192	0.458	0.416	91
G	0.493	0.459	297	---	---	426
H	0.494	0.456	420	0.478	0.444	445
I	0.487	0.446	438	0.456	0.419	290
J	0.487	0.446	492	0.477	0.442	462
K	0.483	0.446	207	0.472	0.447	122
L	0.494	0.452	434	0.478	0.446	397
M	0.499	0.445	682	0.491	0.447	778
N	0.500	0.455	618	---	---	708
O	0.513	0.456	306	0.486	0.436	252
P	0.502	0.451	605	0.490	0.448	500
Q	0.519	0.445	337	0.494	0.426	277
R1	0.523	0.455	378	0.504	0.449	470
R2	0.524	0.454	---	0.506	0.451	---
S	0.530	0.454	235	0.511	0.441	199
T1	0.524	0.452	648	0.517	0.452	401
T2	0.525	0.454	---	0.518	0.452	---
T3	0.526	0.455	---	0.522	0.457	---
U	0.526	0.447	630	0.517	0.447	1029
V	0.526	0.452	766	0.511	0.447	616
W	0.537	0.449	282	0.534	0.453	291
X	0.549	0.441	287	0.531	0.429	272

Number designation with product letter indicates multiple measurements of that sample.
"---" indicates that measurements of that sample were not available.

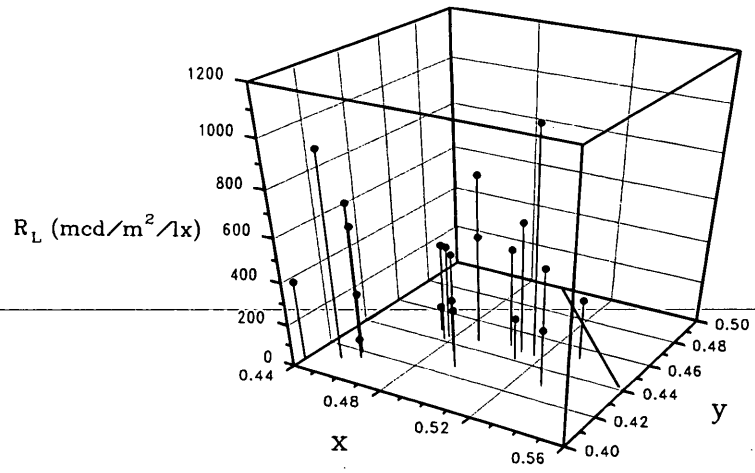

FIGURE 9 Brightness as function of chromaticity at 36-m geometry.

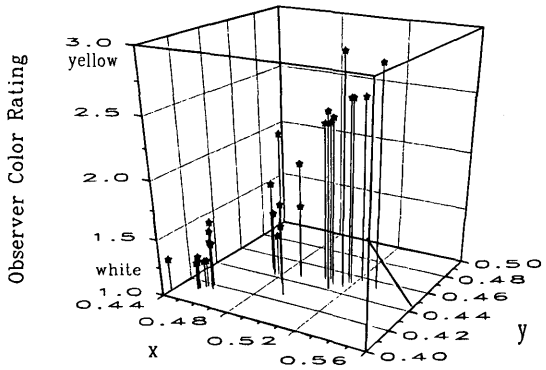

FIGURE 10 Observer night color ratings for 36-m viewing mapped on chromaticity.

36 m. The samples were viewed as isolated center lane lines with a parallel white edge line in place for all viewings. Observers rated the color on a scale of 1 to 5 from white to yellow.

The results showed significant color differences between pavement marking materials. At shorter distances, more of the materials appeared yellow than at longer distances. At longer distances observer ratings showed greater separation of color distinction between the materials.

Retroreflective color was measured at geometries corresponding to 12- and 36-m viewing conditions. Brightness did not appear to correlate with color. Color measurements for the different distances also showed the dependence of color on test conditions. Measured colors with a higher-color saturation were reported by observers to have a more yellow appearance.

CONCLUSIONS

Daytime and nighttime color are not the same. Some pavement markings having acceptable yellow daytime color were white in retroreflective color. Different "yellow" products can have varying nighttime color performance.

This work demonstrates the feasibility of specifying nighttime color using instrumental methods that can correlate with the human visual experience. However, more effort will be required to make such measurements routine and to define more precisely acceptable color zones. These retroreflective color requirements for pavement markings are subject to the safety needs of the driving environment in question.

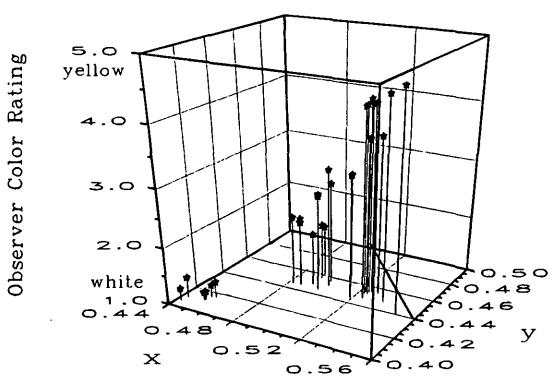

FIGURE 11 Observer night color ratings for 12-m viewing mapped on chromaticity.

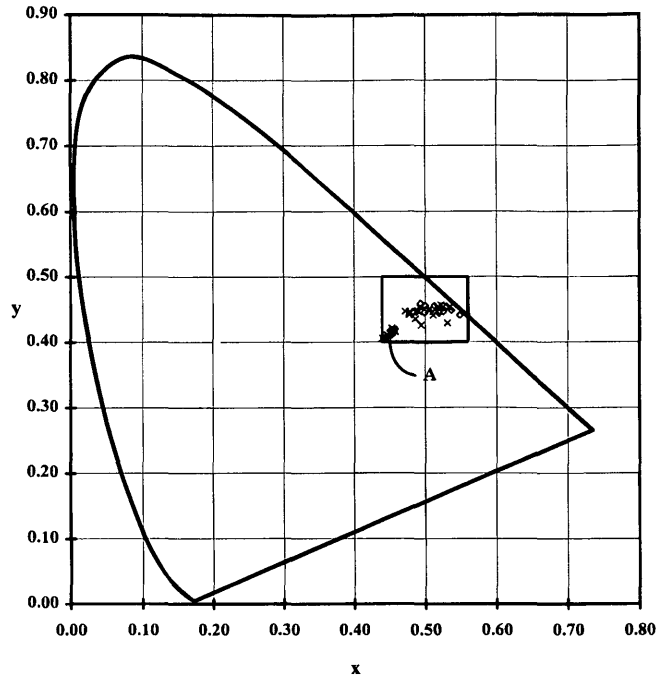

FIGURE 12 Retroreflective chromaticity of pavement markings A through X at 12- and 36-m geometries plotted on chromaticity diagram using CIE 1931 standard observer.

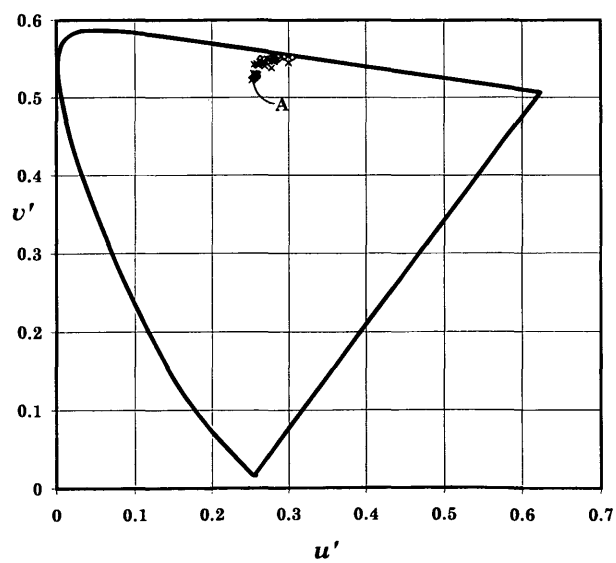

FIGURE 13 Retroreflective color of pavement markings A through X at 12- and 36-m geometries plotted on CIE 1976 u′, v′ diagram.

REFERENCES

1. *Manual on Uniform Traffic Control Devices for Streets and Highways.* FHWA, U.S. Department of Transportation, 1988, Section 3A-5, p. 3A-2.
2. *Traffic Control Devices Handbook.* FHWA, U.S. Department of Transportation, 1983, Section 3A-4, p. 3-7–3-8.
3. Banov, A. The Markets, This week's developments: Colorants and pigments. *American Paint & Coatings Journal,* Vol. 77, No. 15, Oct. 19, 1992, pp. 19–20.
4. Waldron, D. Advances in Retroreflectivity of Yellow Traffic Striping. Presented at 73rd Annual Meeting of the Transportation Research Board, Washington, D.C., Jan. 1994.
5. *Retroreflection, Definition and Measurement,* CIE Publication 54. Central Bureau of the CIE, A-1033, Vienna, 1982.
6. *Colorimetry,* 2nd ed. CIE Publication 15.2. Central Bureau of the CIE, A-1033, Vienna, 1986.

Publication of this paper sponsored by Committee on Visibility.