First Precast Concrete Box Culverts in Minnesota

JAMES J. HILL AND FLOYD J. LAUMANN

The first known precast concrete box culverts were installed in Minnesota in 1974 on T.H. 60 with up to 9.75 m (32 ft) of overfill. The twin precast barrel sections were placed at the same elevation, and 1 m (3 ft) apart. The heaviest sections had 280-mm (11-in.) top and bottom slabs and 250-mm (10-in.) thick sidewalls. The 82-m (268-ft)-long box culverts plus precast apron sections were placed in less than 4 days. Actual construction time for this project was 4 weeks. The advantages of precast concrete box culverts over cast-in-place concrete culverts are shorter construction time and better quality control. The time savings is desirable because of the short seasonal construction time in Minnesota and heavy traffic usage. After 20 years these box culvert structures do not show any structural distress.

In 1974, the first precast concrete box culverts were installed in Wanamingo, Minn., on T.H. 60 under 9.75 m (32 ft) of fill. The double line of box culverts was 2.75 m (9 ft) high by 3.05 m (10 ft) wide. The box sections were designed for 9.75 m (32 ft), 7.60 m (25 ft) and 4.9 m (16 ft) of fill above them. They were placed 1 m (3 ft) apart at the same flow line elevation (see Figures 1 and 2).

One of the major concerns of the precast box sections was tongue and groove laps of the 1.2-m (4-ft)- and 1.5-m (5-ft)-long sections. The tongue and groove of the box sections were set at 150 mm (6 in.) long and had an inside slope of 13 mm (0.5 in.) to help slide the sections together (see Figure 3). Some cracking and/or spalling occurred at the haunch tongues on a few sections (see Figure 4).

Tie rods 25 mm (1 in.) in diameter were placed through tie holes at about midheight to prevent culvert settlements and frost action from pulling the sections apart (see Figures 5 and 6). These tie rods were also used on precast culvert end sections.

DESIGN CONSIDERATIONS AND STRESSES

The design of conventional concrete box culverts was based on service load stresses and moment distribution. No allowance was made for corner fixity/restraint. The precast boxes were designed for an embankment load condition using Marston-Spangler loading theory with 1|925 kg/m^3 (120 lb/ft^3) soil weight. This produced an earth load range of 1.13 to 1.4 times the earth column load over the box.

Side pressures were taken at 0.16 and 0.75 of the vertical load to determine maximum steel in top and bottom slabs and sidewalls. A dead load factor of 1.50 and a live load factor of 2.50 were used according to existing AASHTO specifications. Live load based on HS20 loading with impact and distribution through earth fills was based on 1973 AASHTO Standard Specifications for Highway Bridges.

The design yield strength of the wire mesh was held to a maximum of 413|685 MPa (60,000 lb/in.^{2}) even though 448|160 MPa (65,000 lb/in.^{2}) material was used. The design shear reinforcing stress limit was 206|840 Mpa (30,000 lb/in.^{2}) with the allowable concrete compressive stress at 34,470 MPa (5,000 lb/in.^{2}).

The concrete cover on the reinforcement was set at 25 mm (1 in.) which was taken from ASTM specifications. In some cases this yields 13 mm (1/2 in.) of cover when ASTM tolerances are employed (see Figure 6).

Cracks occurred in most sections at the center of the inside side wall, and at the bottom of the top fillet before the sections were placed in the field. This was apparently due to stresses from handling and/or shrinkage. The side walls inside faces did not have any steel.

The wall thicknesses of the box sections were held to a minimum for hauling purposes (see Table 1 for actual thicknesses used).

When dead and liveload shear stresses exceeded allowable concrete shear stress, shear stirrups were added as required (see Table 2). Several different types of shear steel were allowed, but all types were required to lap around primary reinforcement (see Figures 7 and 8). The J bar option shown in Figure 7 was used on 7.6-m (25-ft) and 9.75-m (32-ft) sections.

Mastic rope was placed in the tongue and groove joint to prevent the movement of soil materials through them. The rope was packed into the exposed joint before the adjacent culvert section was placed (see Figure 3).

BACKFILL MATERIAL AND COMPACTION

Granular bedding as per Minnesota/U.S. Department of Transportation (MN/DOT) Specification 2451.3C2 was required beneath the culverts. Granular bedding contains natural or partly crushed natural gravel obtained from a natural gravel deposit. The foundation material was required to be shaped to closely fit the bottom of the box culvert. Bedding material was placed in 150-mm (6-in.) lifts and compacted to 95 percent of maximum density. The immediate 150 mm (6 in.) of bedding beneath the bottom of the culvert sections was only consolidated to sufficiently produce uniform pipe support. A subcut of 300 mm (12 in.) was made.

Selected material as per MN/DOT Specification 2451.3D was used around the sides and on top of the culvert sections. The selected material is acceptable mineral soil which is free of clods, sod, and roots. This material was compacted to 90 percent maximum density in 200-mm (8 in.) lifts. All backfill progressed in simultaneous uniform horizontal layers.

J. J. Hill, MN/DOT Bridge Office, 1500 W. County Road B2, Roseville, Minn. 55113. F. J. Laumann, Hancock Concrete Prod. Co., Inc., 5275 Edina Industrial Boulevard, Minneapolis, Minn. 55439-2919.

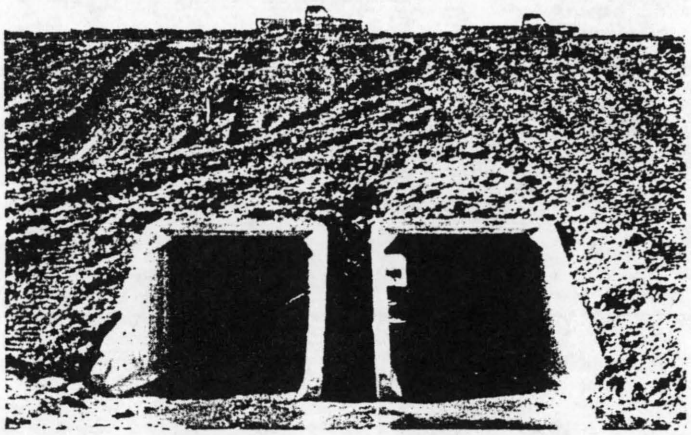

FIGURE 1 Inlet view of box culverts.

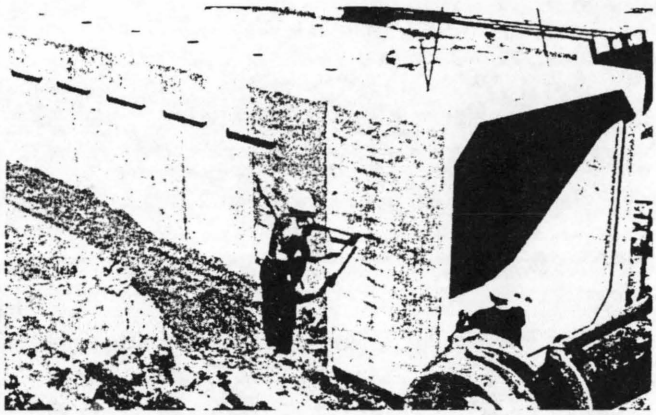

FIGURE 2 Side view of box culverts.

The two lines of boxes were placed 1 m (3 ft) apart to provide sufficient room for adequate compaction. Riprap was placed on the fill slope adjacent to the boxes (see Figures 9 and 10).

OTHER DESIGN CONSIDERATIONS

To prevent piping and undermining of culvert inlets and outlets, riprap or concrete dropwalls were used by MN/DOT on cast-in-place concrete culverts. Riprap was used on this box culvert project with reasonable success.

To improve the flow characteristics at the inlets to the box culverts, 100-mm (4-in.) chamfers were added to the concrete edges (see Figures 11 and 12). Based on FHWA's published data on inlet loss coefficients, the sloped/beveled ends appear to have a 0.5 inlet loss coefficient.

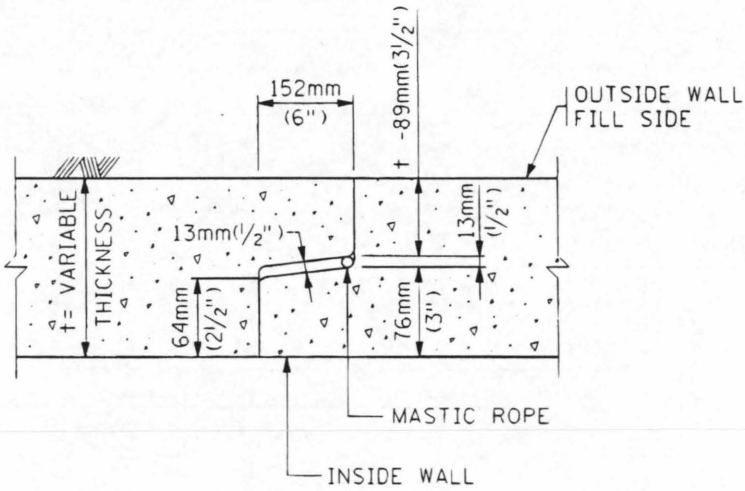

NOTES:

1. TONGUE AND GROOVE TO BE 152mm(6").
2. TONGUE 64mm(2½") MIN. MEASURED FROM INSIDE WALL.
3. 13mm(½") ANNULAR SPACE BETWEEN TONGUE & GROOVE ALLOWS ROOM FOR MASTIC WHEN NECESSARY.

FIGURE 3 Tongue and groove detail for precast box culverts.

FIGURE 4 View of concrete spalling at bottom haunch tongue section.

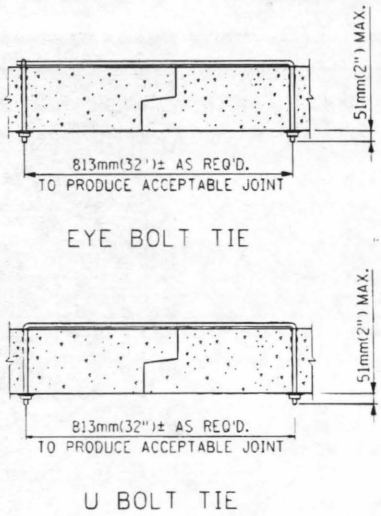

FIGURE 5 Bars at joints.

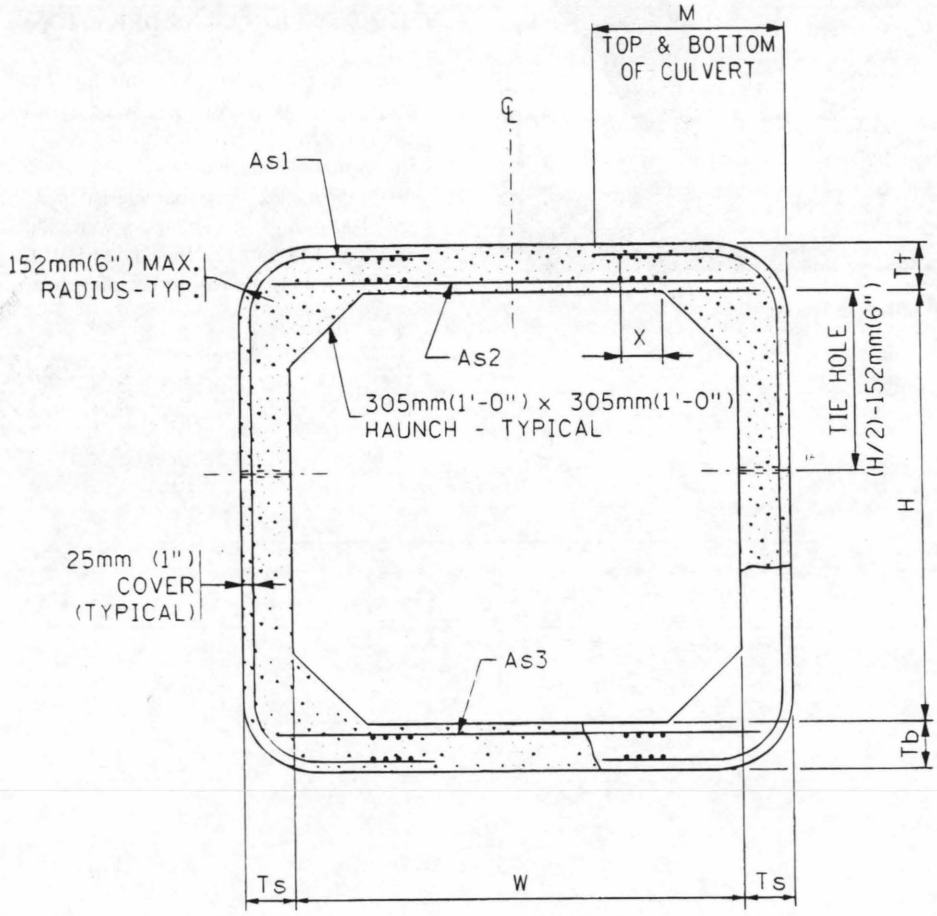

FIGURE 6 Cross section of box culvert.

TABLE 1 Box Culvert Wall Thickness

Design Fill Height	Top Slab	Bottom Slab	Sidewall
9.75 M (32 ft.)	280 mm (11 in.)	280 mm (11 in.)	250 mm (10 in.)
7.60 M (25 ft.)	250 mm (10 in.)	250 mm (10 in.)	200 mm (8 in.)
4.90 M (16 ft.)	250 mm (10 in.)	250 mm (10 in.)	200 mm. (8 in.)

TABLE 2 Steel Reinforcement Requirements

DESIGN STEEL REQUIREMENTS IN SQ. MM/300 MM (SQ. INCHES/FOOT)			
	4.88M (16') Overfill	7.62M (25') Overfill	9.75M (32') Overfill
A_{s1}	226 (.351)	433 (.671)	612 (.948)
A_{s2}	540 (.837)	995 (1.543)	1186 (1.838)
A_{s3}	570 (.884)	1032 (1.600)	1220 (1.891)

NOTE: See Figure 5 for location of reinforcement.

SHEAR STEEL					
	4.88M (16') Overfill	7.62M (25') Overfill		9.75M (32') Overfill	
		x distance	Area Req'd	x distance	Area Req'd
Top Slab	Not Req'd.	650 mm (25.5")	75 mm²/300 mm (.117 in²/ft)	850 mm (33.25")	130 mm²/300 mm (.206 in²/ft)
Bottom Slab	Not Req'd.	SAME AS TOP SLAB		SAME AS TOP SLAB	

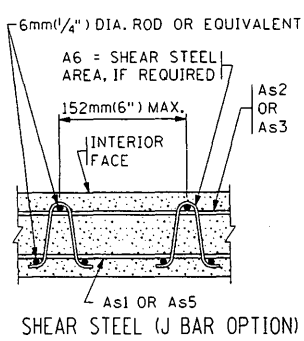

FIGURE 7 Shear steel (J bar option).

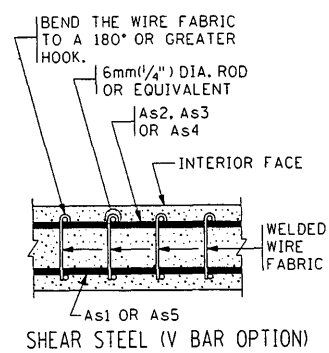

FIGURE 8 Shear steel (V bar option).

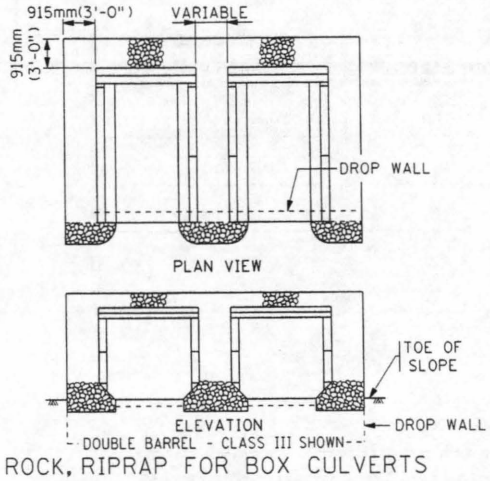

FIGURE 9 Rock riprap for box culverts.

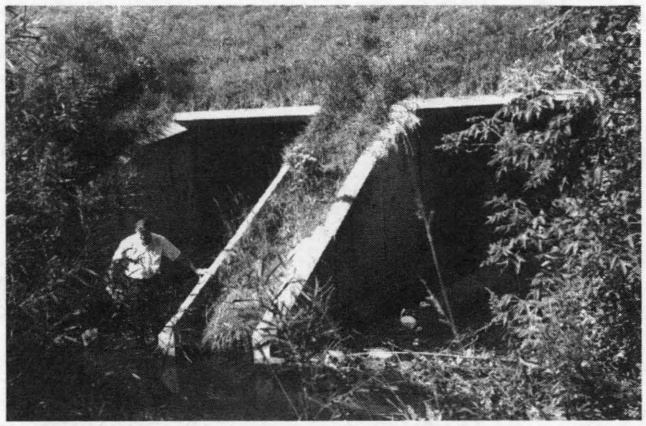

FIGURE 10 View of inlet end of concrete box culvert.

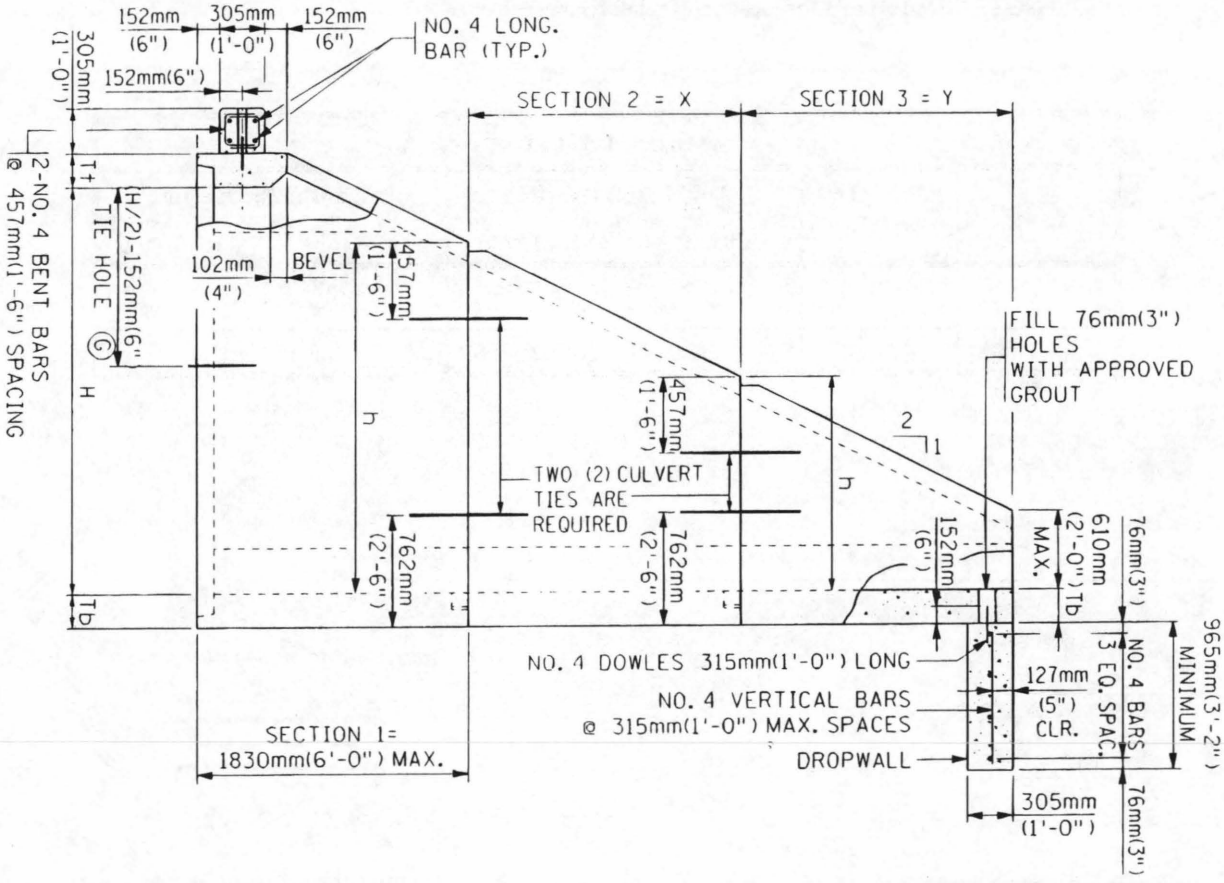

FIGURE 11 Box culvert side elevation.

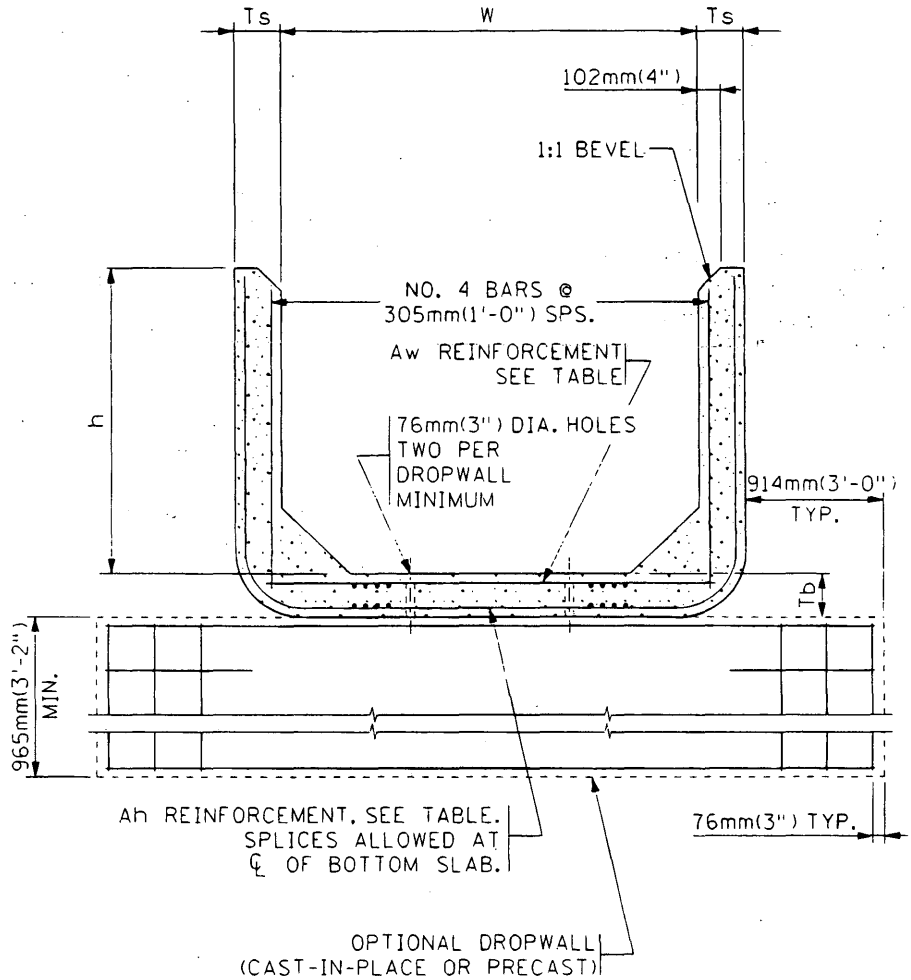

FIGURE 12 End section of box culvert.

CONSTRUCTION AND SUBSEQUENT INSPECTIONS

These concrete box culverts were inspected after construction and at least semiannually for 10 years after construction. During these inspections the following items were observed:

- There was some piping action under the inlet end of one box culvert line. Water at low flow disappeared under the inlet section and resurfaced inside the pipe at about 5 m (16 ft) downstream.
- On about midheight of the inside face of the vertical walls a small horizontal hairline crack occurred. No reinforcement steel had been used on inside face of side wall.
- Also slight hairline cracks appeared at the location where the sidewall met the 300 mm (12 in.) fillets. These cracks would sometimes appear in culvert sections while in the manufacturer's yard and/or at the project site before installation. These appeared to be shrinkage and/or handling stress cracks. They did not increase in size when installed in the field and to date are unchanged. See Figure 13 for a view of the interior of one box culvert which was taken in a September 1994 inspection.

DESIGN MODIFICATIONS

Newer designs added minimum temperature steel in the side walls plus no. 3 bars in the fillets, which eliminated the cracking problem. Reinforcement in the top of the top slab and bottom of the bottom slab was also added in later designs for potential handling stresses.

Standard thicknesses of 230-mm (9-in.) top slab, 250-mm (10-in.) bottom slab and 200-mm (8-in.) sidewalls were adopted for standard box culvert designs.

Later box culvert joint designs allowed a 600-mm (24-in.)-wide filter cloth on the top and sides of the culvert joint with mastic rope placed on the bottom. This method kept sand, and so forth, from going through the joint, but allowed water to effectively move through the joint.

Precast dropwalls have been standardized at locations where required.

Tongue and groove lengths have been reduced from 150 mm (6 in.) to 100 mm (4 in.) to reduce cantilever reinforcement requirements and potential cracking.

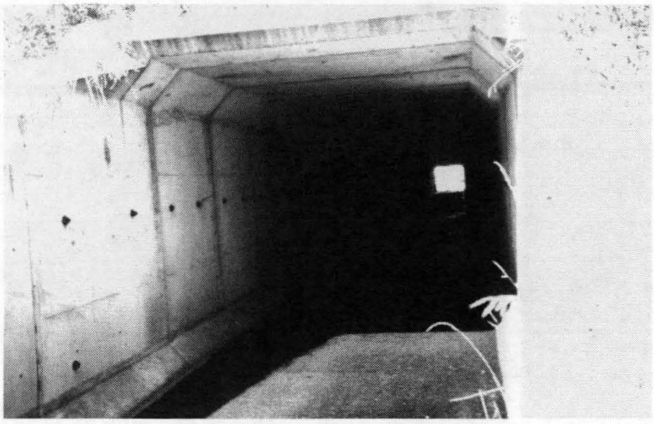

FIGURE 13 View of inlet sections of box culvert.

CONCLUSIONS

Based on this project and other similar box culvert projects, conclusions are as follows:

- To prevent water from piping under the culvert, dropwalls of 1.00 m (3.17 ft) depth are required at inlet and outlet end sections.
- Minimum steel or the amount required by design is now required on inside faces of sidewalls to eliminate cracking from sidefill pressure and handling stresses.
- Reinforcement in the top of the top slab and the bottom of the bottom slab was also added by design to meet temporary handling stresses.
- Reinforcement is now required to have a tolerance between 40 mm (1.5 in.) minimum and 50 mm (2 in.) maximum concrete cover because of severe environment and salt usage in Minnesota.
- To meet AASHTO temperature and minimum reinforcement requirements, 40 mm^2 (0.06 $in.^2$) of reinforcement is placed longitudinally and 125 mm^2 (0.20 $in.^2$) is placed transversely at 305-mm (12-in.) spacings.

After 20 years of service these culvert sections with fills up to 9.75 m (32 ft) are still functioning and in good shape (see Figure 13). However, the items mentioned in the above conclusions have been added to the present design of precast concrete box culverts to assure a good quality structure.

Publication of this paper sponsored by Committee on Subsurface Soil-Structure Interaction.