Innovations Deserving
Exploratory Analysis Programs

Transit IDEA Program

Development of a Prototype Retrofit Bumper for Improved Light Rail Vehicle (LRV) Safety

Final Report for
Transit IDEA Project 77

Prepared by:
Robert MacNeill, Steven Kirkpatrick, and Robert Bocchieri
Applied Research Associates
Southwest Division, Silicon Valley Office

July 2015

TRANSPORTATION RESEARCH BOARD
The National Academies of
SCIENCES · ENGINEERING · MEDICINE

Innovations Deserving Exploratory Analysis (IDEA) Programs Managed by the Transportation Research Board

This IDEA project was funded by the Transit IDEA Program.

The TRB currently manages the following three IDEA programs:

- The NCHRP IDEA Program, which focuses on advances in the design, construction, and maintenance of highway systems, is funded by American Association of State Highway and Transportation Officials (AASHTO) as part of the National Cooperative Highway Research Program (NCHRP).
- The Safety IDEA Program currently focuses on innovative approaches for improving railroad safety or performance. The program is currently funded by the Federal Railroad Administration (FRA). The program was previously jointly funded by the Federal Motor Carrier Safety Administration (FMCSA) and the FRA.
- The Transit IDEA Program, which supports development and testing of innovative concepts and methods for advancing transit practice, is funded by the Federal Transit Administration (FTA) as part of the Transit Cooperative Research Program (TCRP).

Management of the three IDEA programs is coordinated to promote the development and testing of innovative concepts, methods, and technologies.

For information on the IDEA programs, check the IDEA website (www.trb.org/idea). For questions, contact the IDEA programs office by telephone at (202) 334-3310.

IDEA Programs
Transportation Research Board
500 Fifth Street, NW
Washington, DC 20001

Acknowledgements

The investigators would like to acknowledge TRB Senior Program Officer, Jo Allen Gause, and Program Director, Jon Williams, for their guidance and support. We would also like to thank the ASME RT committee members that have provided oversight and input during the project's progress. Lastly, we wish to thank Sacramento RT Chief Operating Officer, Mark Lonergan, and Maintenance Superintendent, Laura Espinoza, for their support and for providing a platform to develop the bumper system.

Table of Contents

1. Executive Summary **3**

2. Background **5**

3. IDEA Product **6**

4. Concept Innovation **8**

5. Investigation **8**

5.1. Investigation Description and Approach 8

5.2. Task 1: Bumper Concept Adaptation 11

5.3. Task 2: Crashworthiness Analysis 13

5.4. Task 3: Detailed Bumper Design Development 15

5.4.1. Detailed Bumper Design 16

5.4.2. Weight, Support, and Locking Considerations 19

5.4.3. Corner Energy Absorber Selection 20

5.4.4. Crash Performance and Structural Survivability 20

5.5. Task 4: Demonstration and Validation Test Planning 22

5.5.1. Envelope Testing 22

5.5.2. System Testing in Operational Environment 22

5.5.3. Crashworthiness Testing 22

6. Plans for Implementation **23**

7. Conclusion **23**

8. Investigator Profile **24**

9. References **25**

1. EXECUTIVE SUMMARY

This report summarizes the accomplishments and work performed during the Transit IDEA project "Development of a Prototype Retrofit Bumper for Improved Light Rail Vehicle (LRV) Safety."

The purpose of this program is to expand on previous research by adapting a conceptual LRV retrofit bumper design onto a particular car. The work was performed by Applied Research Associates (ARA), in partnership with a car manufacturer, Siemens Industry (Siemens), and with the LRV operator Sacramento Regional Transit (RT), that is interested in implementing the system. Sacramento RT's CAF LRV, shown in Figure 3, was considered for the bumper retrofit under this program.

Figure 1. Sacramento RT CAF LRV to be retrofit with the developed bumper system.

In this project a novel coupler-mounted, segmented bumper design with different energy-absorbing characteristics for frontal and corner impacts was developed. The segmented bumper, shown in Figure 2, is designed to actuate at much lower forces in corner collisions with automobiles. The bumper design also includes an improved geometric profile, making the front-end less aggressive to automobiles and pedestrians. The retrofit bumper concept addressed by this project incorporates ASME RT-1 safety standard compliant LRV end design features, with respect to the protection of street vehicles. The bumper design includes a full width, smooth end enclosure with low ground clearance and is designed for optimized crash compatibility with road vehicles. By improving the collision compatibility, the bumper also reduces the LRV derailment potential in these impacts. The ability to retrofit the bumper onto existing LRV designs is also a key innovative feature of the bumper system.

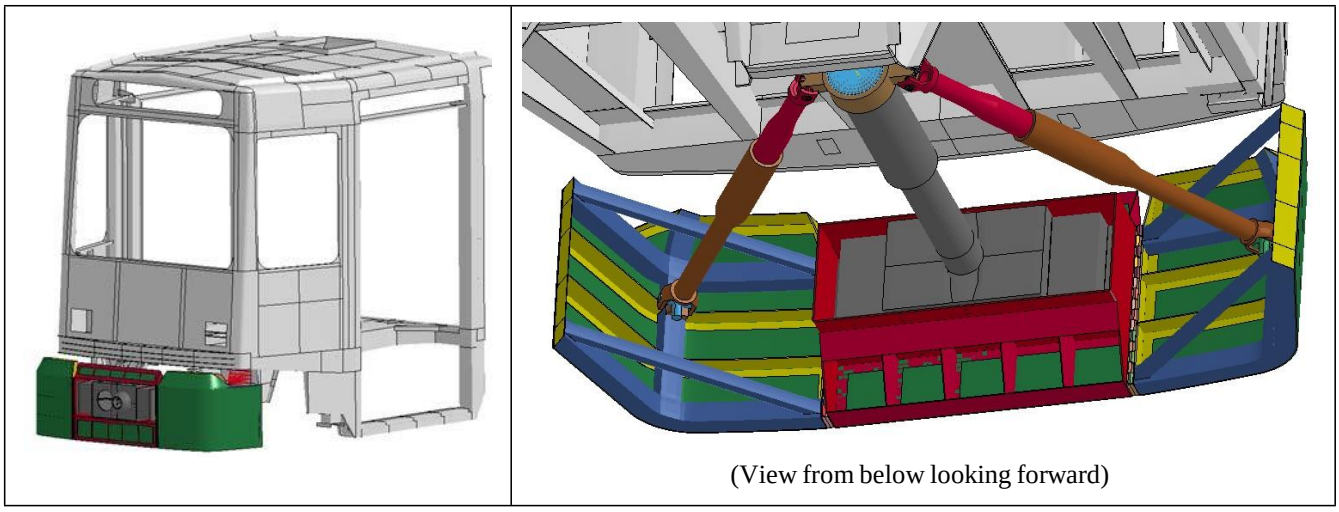

Figure 2. Segmented, coupler-mounted LRV bumper design incorporating crash energy management features tailored for automobile impact.

The goals of this research project were to adapt the conceptual bumper design onto the Sacramento RT CAF LRV to demonstrate its crashworthiness and safety improvement through analysis and to develop a preliminary plan for future demonstration tests. The project objectives have been accomplished. The bumper conceptual design was adapted to the Sacramento RT CAF LRV and crashworthiness analyses have been conducted to assess the system performance. The adapted design takes into account the geometry and necessary clearances of the LRV, and incorporates the lessons learned from previous research. Crashworthiness analyses were conducted for a suite of road vehicle impact scenarios. The efficacy of the bumper system was evaluated through struck vehicle occupant injury assessments. Comparing all the scenarios analyzed and the resulting injury measures, it can be concluded that the bumper system adapted to the Sacramento RT CAF LRV significantly reduces struck vehicle occupant injury, compared with the current configuration without a bumper. The analysis indicates remarkable injury reduction potential with the bumper system. For example, the probability of serious injury was reduced by 66% with the bumper. An overall improvement in serious pelvic injury probability of 25% was demonstrated. Average serious thoracic trauma probability was dramatically reduced by 91%.

The system has been designed to survive 20 mph automobile collisions with minimal damage and no failure. The intent is that the LRV could be driven away from the accident without the need for onsite, immediate maintenance. The system is designed to perform well for higher speed collisions as well. While providing greatly enhanced safety performance, the design strikes a balance for other key design considerations such as weight, cost, producibility, and serviceability.

Plans to build, demonstrate, and implement the system have been pursued. The team has recently been awarded FTA grant funding to execute a planned prototype demonstration program. During this follow-on research, prototypes will be produced of the developed Sacramento RT CAF LRV bumper design. The prototypes will be used to demonstrate operational and crashworthiness performance. Two test programs are planned: one for in-service operational testing on the Sacramento RT line and another for full-scale crashworthiness tests against road vehicles. At the conclusion of the pilot project, the bumper with demonstrated performance will have been produced and implemented with an operating LRV fleet. There are approximately 1,000 high floor LRV cars in North America that could all benefit from this bumper system technology. They could be retrofitted quickly and brought up to modern road vehicle crashworthiness standards without the need for procuring entirely new cars with enhanced crash safety capabilities. The goal is to pursue these and other markets worldwide.

2. BACKGROUND

The vast majority of LRV accidents occur with motor vehicles and cyclists/pedestrians. Collisions where the LRV overrides an automobile are all too common, which can lead to negative consequences (*1*). First, the override behavior results in significantly greater crush intrusions into the automobile and greater injuries to the automobile occupants. Second, the override collision has the potential to produce much more extensive damage to the LRV and greatly increase the repair costs and time before the vehicle is placed back in service. Finally, the override collision has a much higher potential to derail the LRV or create higher crash decelerations that can result in higher injury potential to the LRV occupants. Therefore, there has been a recognized need to investigate methods for improving the safety of passengers in motor vehicles as a consequence of a LRV collision.

To address this safety need, the TCRP and FTA funded projects to develop LRV front end features that improve the crash compatibility with automobiles (*2*, *3*). During these efforts, the investigators developed an innovative LRV bumper design concept that was shown to significantly improve crash safety. The prototype bumper utilized both an improved geometric profile making the front end less aggressive to automobiles and pedestrians and a segmented design that actuates at lower forces in the common collision scenario of corner impacts with automobiles. The prototype bumper developed in the FTA project was designed generically as a retrofit to a Siemens S70 LRV; however, the concept can be adapted to most open-end LRV designs.

The resulting bumper from the FTA project showed marked improvements to automobile passenger safety for a variety of automobile types and collision scenarios analyzed. The results clearly show that careful selection of the front end bumper profile can significantly reduce the probability of injuries to automobile occupants. A profile that is low enough to engage the door frame structures of small and light vehicles, with an adequate vertical height to engage the same structures on taller SUVs, provided the best overall performance. Addition of a segmented corner bumper with energy absorbers further reduced the potential for injuries. Overall, the bumper design that encloses the LRV front end prevents struck vehicle override and occupant entrapment. It also helps to deflect pedestrian traffic without entrapment.

The purpose of this program is to expand on previous TCRP-and FTA-sponsored work (*2*, *3*) by adapting a conceptual LRV retrofit bumper design onto a particular car. The work was performed by Applied Research Associates (ARA), in partnership with a car manufacturer, Siemens Industry (Siemens), and with the LRV operator Sacramento Regional Transit (RT), that is interested in implementing the system. Sacramento RT's CAF LRV, shown in Figure 3, was considered for the bumper retrofit under this program.

Figure 3. Sacramento RT CAF LRV (*4*).

The Sacramento RT CAF car is a California Public Utilities Commission (CPUC) compliant design with 2 g crush capacity and without Crash Energy Management (CEM) devices built into the structure. The CAF car design precedes the 2009 ASME RT-1 safety standard (*5*), which defines structural design requirements to include front closures and CEM devices to improve crash safety. The retrofit bumper concept addressed by this project incorporates ASME RT-1 compliant LRV end design features. The bumper design includes a full width, smooth end enclosure with low ground

clearance and is designed for optimized crash compatibility with road vehicles. The LRV front end enclosing bumper shape prevents struck vehicle override and occupant entrapment. It also helps to deflect pedestrian traffic without entrapment. As such, the CAF LRV currently in service with Sacramento RT can be brought up to current design standards with respect to the protection of street vehicles.

The goals of this research project are to adapt the conceptual bumper design onto the Sacramento RT CAF LRV, to demonstrate its crashworthiness and safety improvement through analysis, and to develop a preliminary plan for future planned demonstration tests. This project research was separated into two stages with the following objectives and task structure:

- Stage I—Develop mock-up design of bumper and conduct crashworthy analysis
    - Task 1. Develop a rough adaptation of the bumper onto the Sacramento RT CAF LRV.
    - Task 2. Conduct bumper crashworthiness analyses for the preliminary design.
- Stage II—Detailed bumper design and crash test planning
    - Task 3. Develop the detailed bumper design.
    - Task 4. Develop a test plan for a future crash test to validate the models used in the bumper design and to demonstrate the crash performance of the prototype bumper.

The following sections describe the resulting bumper system design adapted for the Sacramento RT CAF LRV, a description of the work performed during the investigation, and future plans for product implementation.

3. IDEA PRODUCT

This research advances the design of a retrofit LRV bumper concept, developed to improve the crash compatibility of LRVs with struck vehicles and pedestrians in shared right of way environments. The product of the research is the bumper design that can be carried into future planned prototype operational and crash testing. Once the prototype is demonstrated, it is our goal to refine the design and implement the system with Sacramento RT near-term and other transit agencies longer-term.

An end bumper provides important safety enhancement capabilities compared to open-ended LRVs. The system considered in this study can be retrofitted to an existing fleet of LRVs, which can help extend its life and increase its safety and overall usefulness. The concept can also be adapted for new LRV designs and satisfies key aspects of current LRV crashworthiness design standards.

The retrofit bumper has significant potential impact on transportation practice in that it can be used to improve the safety and longevity of current infrastructure with modest investment. The design can be retrofit onto many existing in-service LRVs with open front ends. In North America, there are currently about 1000 LRVs that could benefit from this technology. The system is designed with low initial and maintenance costs in mind. The system is relatively simple and requires only basic modifications to integrate with the existing car. The system is designed from standard materials and incorporates commercial of the shelf (COTS) items to reduce cost and to increase serviceability. In an effort to minimize downtime in operational service, the bumper was designed to survive a 20 mph road vehicle collision without need for onsite repair. The bumper is designed to deflect struck road traffic and to prevent vehicle override, which further reduces injuries, LRV damages, and downtime.

The design adapted to the Sacramento RT CAF LRV is shown in Figure 4. The bumper consists of a central frame mounted to the coupler head, with energy absorber backed corner wings, which are hinged to the center frame. All structural framing, fasteners, and other hardware are steel. The bumper cover is made up of fiberglass shell segments, one covering the center frame and one for each corner wing. Fiberglass was chosen for its relatively low weight, high strength, and its ease of repair in the event of localized crash damage. The framing is made up of welded structural steel, available in standard shapes and sheet gauges.

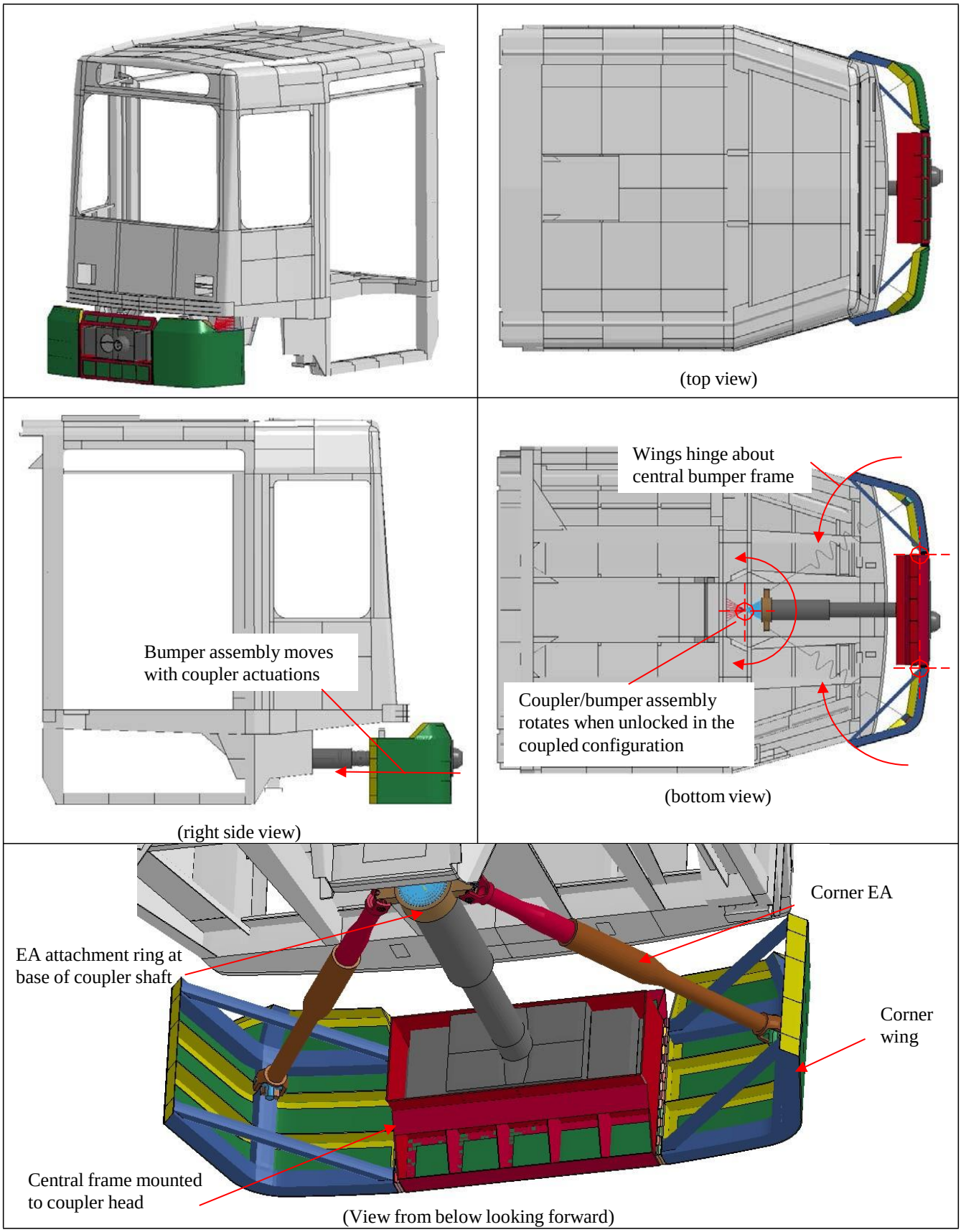

Figure 4. Coupler-mounted bumper design adapted to the Sacramento RT CAF LRV.

4. CONCEPT INNOVATION

In this project a novel coupler-mounted, segmented bumper design with different energy-absorbing characteristics for frontal and corner impacts was developed. The segmented bumper is designed to actuate at much lower forces in corner collisions with automobiles. The bumper design also includes an improved geometric profile, making the front end less aggressive to automobiles and pedestrians. The large contract surface of the bumper face distributes the impact load and minimizes intrusion into the vehicle. Low bumper ground clearance ensures engagement of the struck vehicle along its strong side sill, which distributes the load across the struck vehicle length and further minimizes passenger compartment intrusion. The enclosed front end helps to deflect pedestrian traffic and increases survivability with reduced risk of entrapment under an open LRV front end. By improving the collision compatibility, the bumper also reduces the LRV derailment potential in these impacts. The ability to retrofit the bumper onto existing LRV designs is also a key innovative feature of the bumper system.

There are several key innovations of the bumper design:

- Coupler-mounted, moves with the coupler, and does not interfere with normal coupled LRV operations and requirements.
    - This approach makes the design relatively easy to retrofit to different LRVs.
- Segmented bumper design, with tailored energy absorption (EA) for rail and road vehicle impact.
    - Corner absorption tailored for force and energy of collision with automobiles
    - Center absorption handled by coupler EA, tailored for higher LRV–LRV coupling forces
- Optimized cover profile for a range of road vehicle compatibility.
    - Engages vehicle low, provides standoff to delay or prevent impact of relatively rigid LRV structures with cars and pedestrians.
    - Closed front end prevents vehicle and pedestrian override.

The retrofit bumper concept addressed by this project incorporates ASME RT-1 compliant LRV end design features. The bumper design includes a full width, smooth end enclosure with low ground clearance and is designed for optimized crash compatibility with road vehicles. As such, the CAF LRV currently in service with Sacramento RT can be brought up to current design standards for the protection of street vehicles. Modernization of currently in-service LRVs will help to extend the life and improve the safety of existing infrastructure, which will dramatically reduce long-term costs.

Previous research was conducted to thoroughly investigate the necessary energy absorption requirements and optimized bumper profile characteristics (*3*). Detailed nonlinear finite element analysis (FEA)-based crashworthiness investigations were conducted to evaluate and demonstrate the performance of the bumper concept. Detailed FEA is used widely in the rail and automotive industry to design and evaluate crashworthy structures. The influence of the various profile parameters on struck vehicle occupant injuries was evaluated to determine optimal profile characteristics. The analysis was also used to determine the crash loads for a range of road vehicles and to determine EA requirements from the segmented bumper. The principles and methods learned from the research were applied and adapted to the present Sacramento RT CAF LRV bumper design.

5. INVESTIGATION

5.1. INVESTIGATION DESCRIPTION AND APPROACH

This project research was separated into two stages with the following objectives and task structure.

- Stage I— Develop mock-up design of bumper and conduct crashworthy analysis
    - Task 1. Develop a rough adaptation of the bumper onto the Sacramento RT CAF LRV.
    - Task 2. Conduct bumper crashworthiness analyses for the preliminary design.
- Stage II—Detailed bumper design and crash test planning
    - Task 3. Develop the detailed bumper design.

- Task 4. Develop a test plan for a future crash test to validate the models used in the bumper design and to demonstrate the crash performance of the prototype bumper.

Activities for the first stage were detailed in a project interim progress report (*6*) and are also summarized in this section. Second stage detailed design and test planning activities are summarized below as well.

The methodologies used in the investigation were adapted from the previous FTA study (*3*). First, the bumper concept was adapted to the CAF LRV, taking into account the geometry and necessary clearances of this particular car. The lessons learned from the TCRP and FTA bumper optimization process were applied to the CAF bumper profile and overall system layout. Next, the crash safety improvement of the system was assessed through detailed finite element crashworthiness analysis using the LS-DYNA nonlinear explicit finite element solver (*7*). LS-DYNA is widely used to model a variety of nonlinear, dynamic events including crash, blast, and impact applications. In the analyses, the LRV impacted a target road vehicle, with or without a bumper. Injuries to the vehicle occupant were estimated through standard test surrogate model response measures. The goal of an improved design was to reduce the occupant injuries over a range of collision scenarios, including differing vehicles, impact orientations, and impact speed. With an iterative approach, bumper design configurations were compared to benchmark values of the current configuration without a bumper and to previous bumper iterations. These comparisons were used to guide design changes for overall improved crash safety.

The basic approach to vehicle selection for this study was adapted from the original bumper development research. For the previous study, four vehicles representing a range of passenger vehicle sizes, weights, and center of gravity (CG) height above ground were investigated. The models used were the Dodge Neon (low CG, lightweight), Ford Explorer (high CG, heavy), Toyota RAV4 (high CG, lightweight), and the Ford Crown Victoria (low CG, heavy). The sensitivity of bumper performance was shown to be captured when considering the extreme low, light, and the tall, heavy vehicle combinations, which were the Dodge Neon and the Ford Explorer, respectively. To reduce the number of calculations required for this study, those two extreme vehicle types were carried forward for this effort. Both models were obtained from the National Crash Analysis Center (NCAC) FEA vehicle database (*8*) and were modified for this effort to include seats, door panels, and seatbelts for occupant interaction. The vehicle models with cutaways showing the positioned occupant models are shown in Figure 5.

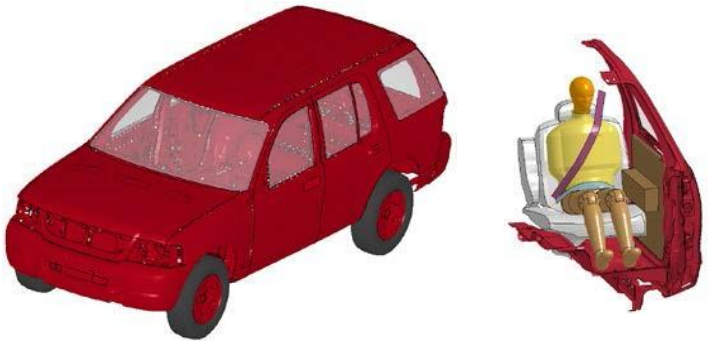

a) Ford Explorer

b) Dodge Neon

Figure 5. Vehicle and positioned SID FEA models used for assessing bumper designs.

To maintain model efficiency and in keeping with the previous research, a single 50th percentile male occupant positioned in the road vehicle driver seat was used for the analysis. Side Impact Dummies (SID) are most appropriate for this study, given that the scenarios considered are impacts to the side of the road vehicle. Several SID models were considered, including a model for the EuroSID 2 with Rib Extensions (ES-2re) (*9*), which has become the federal standard for side impact testing. Ultimately, the USSID model (*10*, *11*) used in the previous concept development was carried forward for this effort. It has an order of magnitude higher calculation timestep than the ES-2re model, yielding a correspondingly shorter runtime for each collision scenario. For comparison, a typical scenario calculation takes about one day on a 12 core computer. This same run would take about 10 days with the ES-2re. While the EuroSID-2re model is the current standard for SID modeling and testing, the USSID model used is still perfectly suitable for evaluating the relative performance of varying configurations. Further, the model efficiency makes running the numerous calculations required for this effort tractable.

Direct measures of injury were extracted from the SID model. Injury criteria were extracted by body region and correlated to the Abbreviated Injury Scale (AIS) as specified by the Association for the Advancement of Automotive Medicine (AAAM) to determine probability of injury in the occupant. The Head Injury Criteria (HIC), Thoracic Trauma Index (TTI), and pelvic acceleration were used as injury criteria (*12–15*). These injury measures, combined with other measures of the collision dynamics, were used to assess the improvements in bumper performance. The goal for this and previous efforts was to improve crash safety at AIS 3 (serious) through AIS 6 (unsurvivable).

The selected impact scenarios were representative of conditions that frequently occur in shared right-of-way LRV and road traffic collisions. Two scenarios were considered for each vehicle. The first was a broadside driver side impact with the centerline of the LRV aligned with the dummy torso. This is referred to as a normal impact and is meant to simulate an LRV impacting the road vehicle traveling through a grade crossing. The second was an angled impact that simulates a road vehicle turning left in front of the moving LRV, which is a common collision scenario in the field. This configuration, referred to as an oblique impact, was set up such that the corner of the LRV anticlimber beam is initially centered on the occupant head and torso. Illustrations of both impact scenarios are shown in Figure 6.

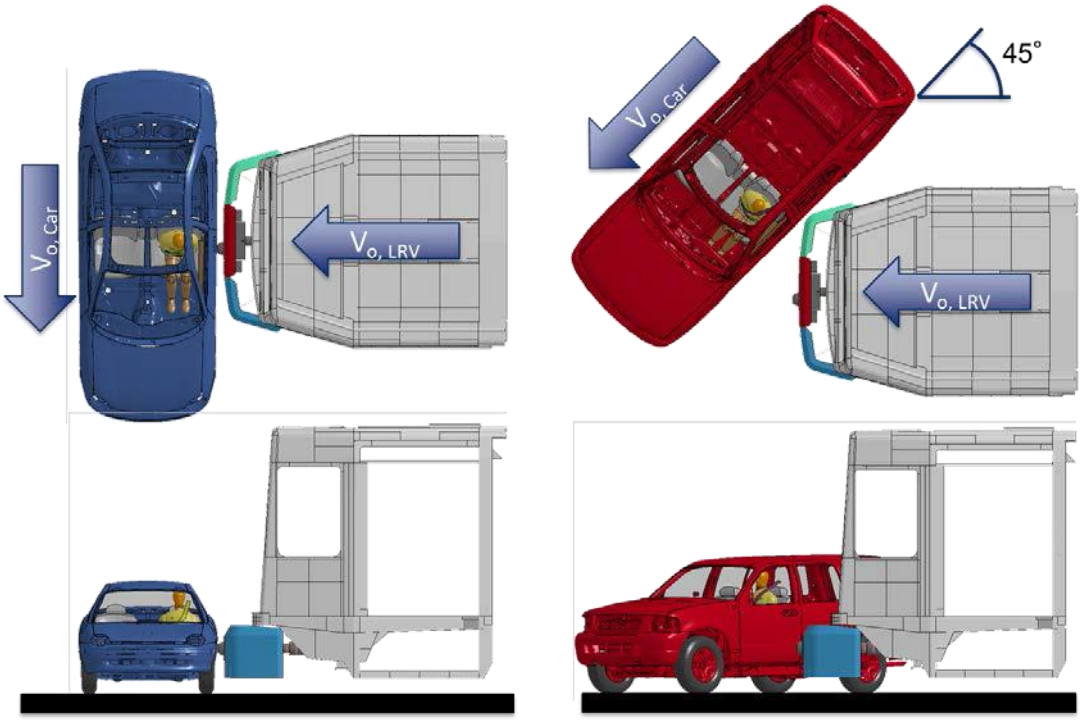

a) Normal impact b) Oblique impact

Figure 6. LRV-road vehicle impact scenarios.

LRV impact speeds between 20 and 30 mph were considered, while the road vehicle was initially stationary for all scenarios. The lower impact speed was identified as a common collision speed and a desired speed for bumper system survivability. At this lower bound, injury measures were relatively low for almost all configurations. Thus, higher speeds were added to more clearly compare the safety improvement of the system with the current configuration at elevated injury levels.

An FEA model of the CAF LRV was developed for this research. The model is based on a Siemens-built car that is very similar to the CAF car geometry. The model was adapted as appropriate to replicate the details of the CAF LRV front and underframe geometry. The FEA model, shown in Figure 7, includes a mesh of the forward cab and underframe as well as the appropriate Voith coupler, which is used on the Sacramento RT CAF LRV. The coupler is of standard design and incorporates hydraulic energy absorption. With between 0 and 100 mm of stroke the coupler model has an approximately linear force-deflection rate of 320 N/mm, and it stiffens considerably beyond that. The coupler characteristics do not significantly affect the performance of the bumper system. A rigid block is included aft of the LRV cab to approximate the inertial properties for the rest of the trailing structure. Travel along a straight and level rail is approximated by constraining the motion of the block with a single degree of freedom in the longitudinal direction. Most of the cab and coupler structure are modeled with deformable elements, with appropriate properties for their respective materials. The hinge and underframe attachment at the base of the coupler is approximated with simplified joint and nodal rigid body definitions. The telescoping hydraulic shaft of the coupler is modeled with representative spring and damping characteristics for the Voith system used on the CAF LRV.

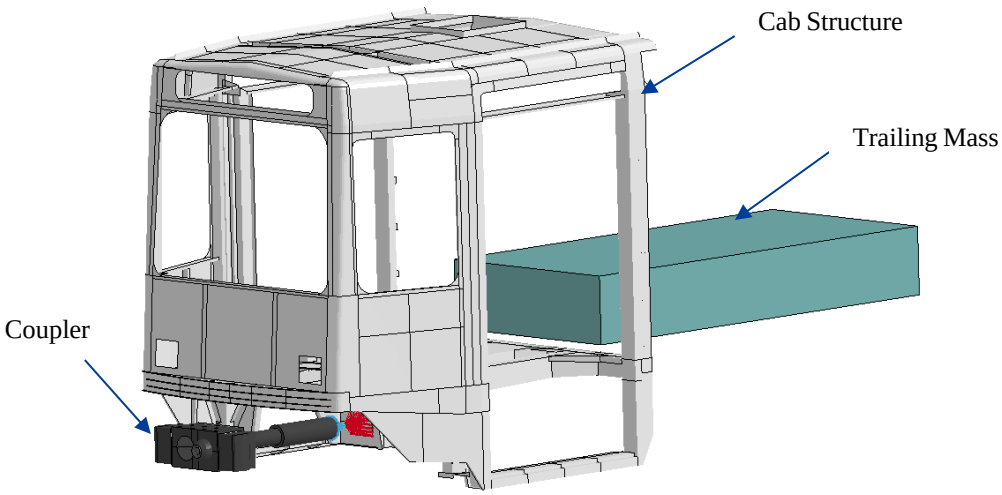

Figure 7. Sacramento RT CAF LRV FEA model.

5.2. TASK 1: BUMPER CONCEPT ADAPTATION

An initial FEA model was created, which incorporated the lessons learned from the original bumper concept optimization process and the requirements unique to the Sacramento RT CAF car. The resulting combined bumper and LRV model is shown in Figure 8. As in the original concept, the adapted design attaches to, and moves with, the existing coupler. As such, the bumper assembly is free to move back under the LRV floor structure as the coupler compresses from normal service loads or from impact loads.

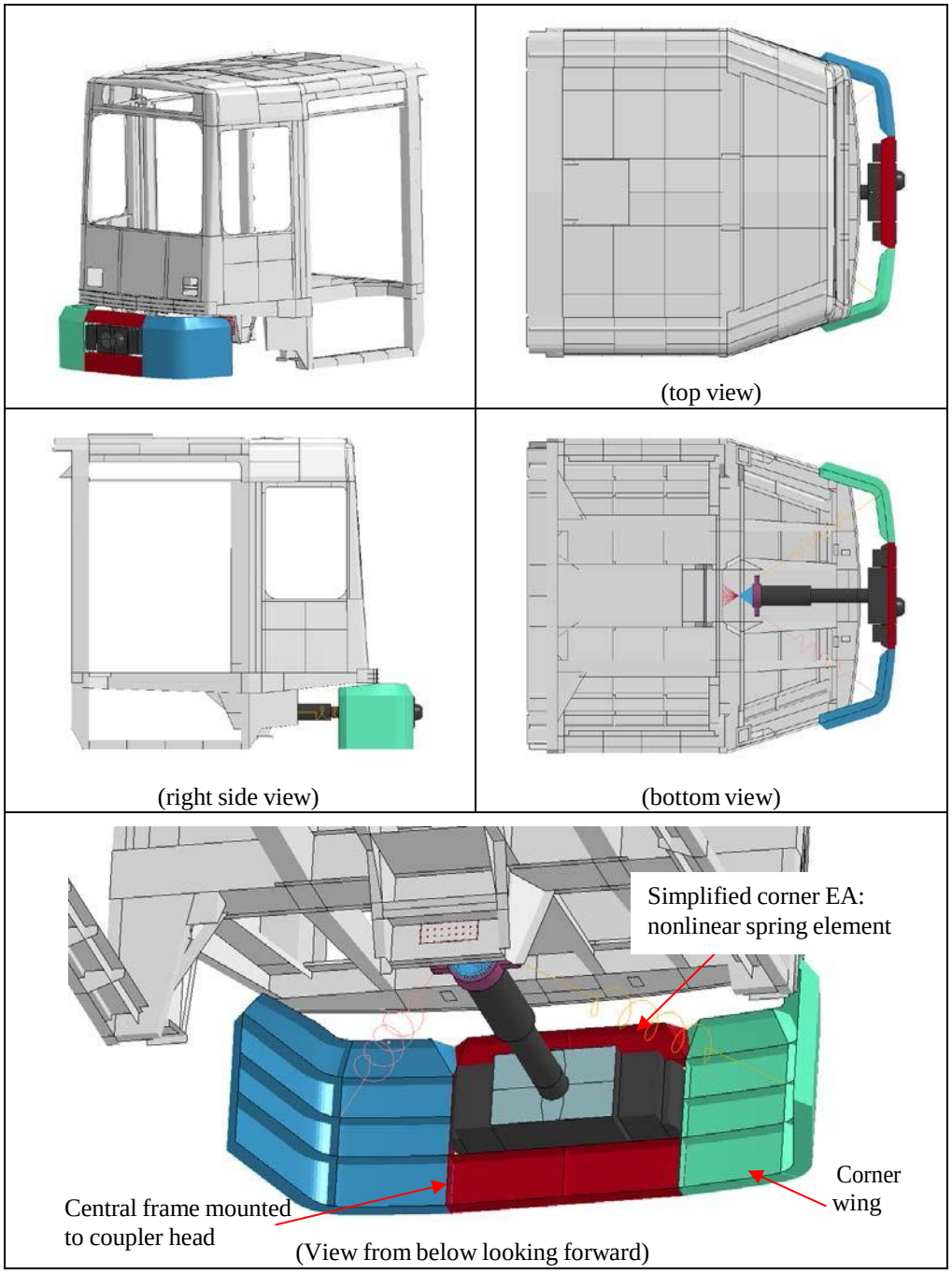

Figure 8. Simplified FEA model of coupler-mounted bumper design adapted to the Sacramento RT CAF LRV.

The bumper forward shell assembly is mounted to the coupler head. The corner wings of the bumper shell (shown as green and blue) are hinged at the central frame (shown as red). The wings are allowed to swing back under the LRV and are supported by EAs, which are shown as orange spring elements in the view from below. The corner EAs are tuned for the forces experienced against road vehicles at impact speeds in the range of 20 to 30 mph.

Several lessons learned from the original concept optimization process were applied to this design. For example, the bumper protrudes as far in front of the relatively rigid LRV structure as possible. This gives the bumper more room to stroke, while isolating the vehicle from the relatively rigid LRV structure. A front profile was chosen starting just aft of the coupler face, sweeping back to mimic the curve of the anticlimber. The rounded corners on the bumper transition to angled sides that mimic the profile of the LRV. The wraparound profile helps deflect auto and pedestrian traffic away

from the otherwise open underframe. The distance between the bottom of the bumper and the ground was minimized to engage the vehicle side sills and also to prevent struck vehicles and pedestrians from being trapped under the structure. Ground clearance of 200 mm above rail was applied to the design, based on operational envelope estimates for the Sacramento RT system. The profile can only enhance crash safety so much; the EA backed, hinged corner segments improve the collision compatibility with road vehicles even further. The corner wing width is maximized (narrow center frame) to enlarge the contact surface for corner collisions.

Numerous practical considerations governed various aspects of the design onto the Sacramento RT CAF LRV. First, the relatively high coupler height dictated a high vertical front profile to the bumper shell. This is not necessarily problematic from a crash safety perspective. The optimization of the original conceptual design indicated that it was critical to have early engagement of the lower sills on the struck vehicle, which this profile achieves. Low engagement of the sills with a swept upper profile to minimize occupant space intrusion is ideal. The high coupler, which is fairly rigid, compared with the road vehicle structure, is at approximately the level of a seated vehicle occupant pelvis for low cars (e.g., compacts and sedans). As such, high pelvic accelerations are expected for normal broadside impact conditions with low cars.

A practical consideration from the relatively high CAF car coupler position required the upper swept back portion of the bumper profile to be shortened compared with the original FTA bumper concept. The upper bumper height is governed by the clearance required under the anticlimber beam, as the coupler and bumper actuate back under coupling or impact loads. A separate fixed piece mounted to the anticlimber to extend the swept portion was considered but was discarded for several reasons: it complicates the design (i.e., higher cost); there was concern that the fixed component would form a knife edge as the bumper actuates backward, leading to greater injury; and a shallow overall bumper thickness and open upper section behind the bumper affords access to the rear of the coupler head, which is a desired serviceability attribute.

The bumper geometry developed for this study will help prevent pedestrians from attempting to step over and through coupled cars. This has been an issue for the Sacramento RT with the current configuration; whereby, in an attempt to shortcut walking around a stopped car, pedestrians have attempted to step between cars as a train briefly stops at a station. Injuries and death can result if the pedestrian is caught in the inter-car gap as the LRV pulls out of the station. Therefore, preventing this type of unwanted pedestrian action was an objective of the overall bumper design, and the developed profile should achieve that goal.

The objective of the first stage design and analysis was to demonstrate improved crash safety of the adapted design, but not necessarily the structural design of the bumper system. A goal for the finished design is that the bumper hardware should survive a 20 mph road vehicle collision. In other words, it should be functioning and structurally sound after the collision. It is expected that the LRV will be driven away from the collision site without requiring significant service and that it would be put back into operation with only minor cosmetic repair, if necessary. This will be achieved by distributing the impact loads through a fiberglass or metal fascia, through a robust sub-structure, and finally through to the corner and/or central coupler energy absorbing elements. In the rough adaptation model developed during Task 1, bumper components are modeled with rigid elements and idealized hinge and spring elements. Task 3 focused on the detailed design and with incorporating deformable elements in the FEA model to evaluate the survivability of the design when subjected to impact loads. However, it was expected that the bumper structure will react fairly rigidly, without significant plasticity at 20 mph. Therefore, treating the structure as rigid in the initial development stage was considered appropriate in Task 2. Results from the crashworthiness evaluation using a rigid bumper structure are discussed in the next section.

5.3. TASK 2: CRASHWORTHINESS ANALYSIS

Detailed finite element crashworthiness analyses were performed to optimize the bumper geometric details. Results from the analyses comparing the performance of the current LRV configuration without a bumper with the adapted bumper design are summarized in this section. Each vehicle, impact location, and bumper/no-bumper configuration was run at three impact speeds: 20, 25, and 30 mph. The resulting injury measures for HIC AIS 3+ injury probability,

HIC AIS 4+ injury probability, TTI AIS 3+ injury probability, and pelvis acceleration are shown in Figures 9a, b, c, and d, respectively. Predicted injury measures at the 20 mph impact speed are low for most configurations investigated. At 25 mph, and especially at the 30 mph impact speed, predicted injury probability is significantly higher for the baseline no-bumper configuration. Significant crash safety improvements with the bumper system can be seen at the higher impact speeds for nearly every collision scenario.

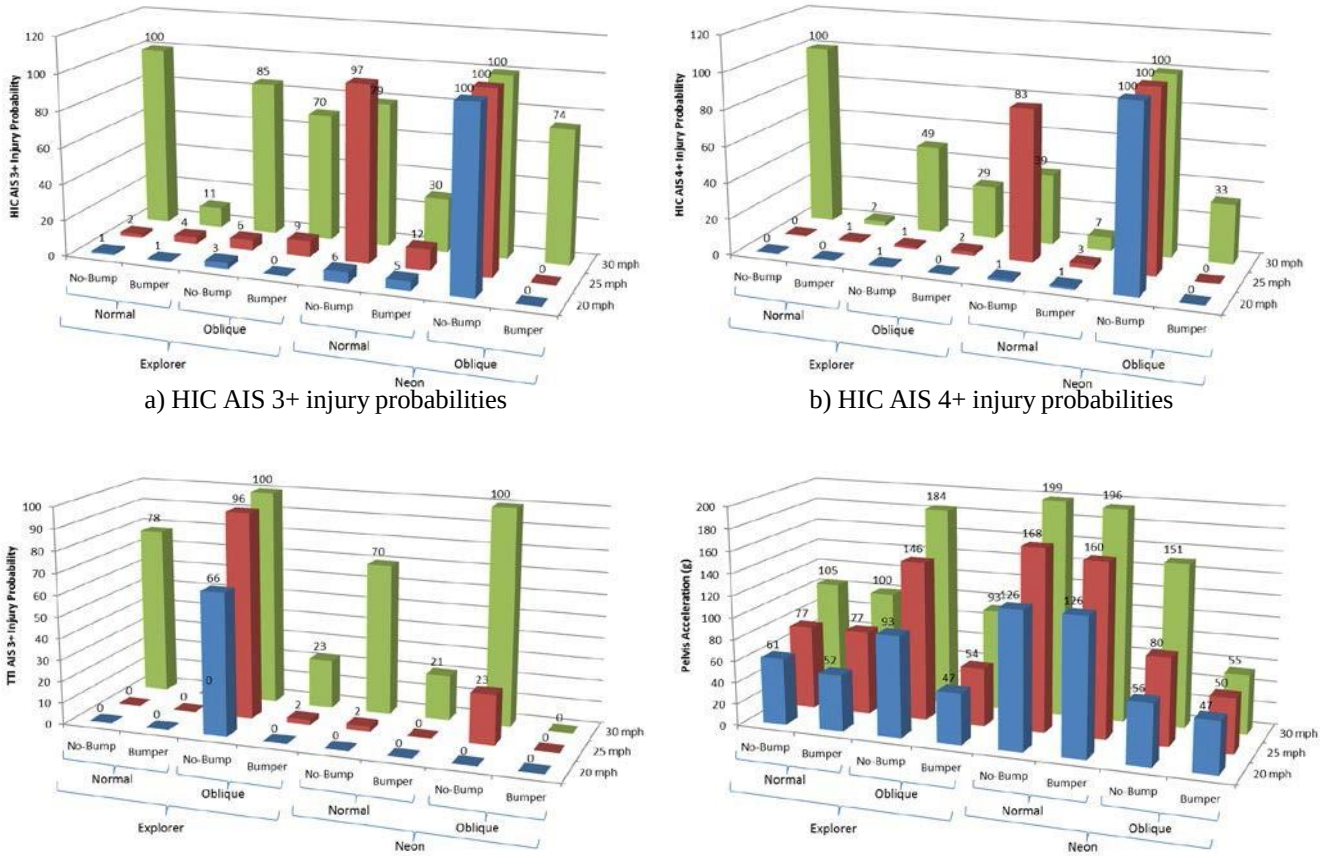

a) HIC AIS 3+ injury probabilities

b) HIC AIS 4+ injury probabilities

c) TTI AIS 3+ injury probabilities

d) Pelvis acceleration (g).

Figure 9. Crashworthiness analysis injury measures.

Several problem areas of the baseline CAF LRV configuration without a bumper can be identified by studying the predicted injury measures. For example, for the Neon oblique impact scenario, the HIC probability of injury is 100 percent for both the AIS 3+ (Figure 9a) and 4+ (Figure 9b) levels, even at the lowest considered speed of 20 mph. In this scenario, the vehicle, seat, and dummy shoulder are impacted by the relatively rigid anticlimber structure. This propels the occupant laterally with its torso insufficiently restrained by the shoulder belt. The occupant head impacts the upper passenger side seat structure, resulting in a sharp deceleration spike that translates to a severe HIC value. The analogous scenario with the bumper system results in a softer impulse on the occupant and the belt is more effective at controlling its motion. A comparison of the response with and without the bumper for a 20 mph oblique impact is illustrated in Figure 10. The figure also shows that the no-bumper configuration tends to override the struck vehicle while the bumper system pushes the vehicle in the direction of travel without an overriding tendency. Figure 9a indicates that HIC AIS 3+ probabilities for the oblique impact at 30 mph are still relatively high, even with the bumper. However, Figure 9b shows that the higher AIS 4+ risk is significantly reduced with the bumper.

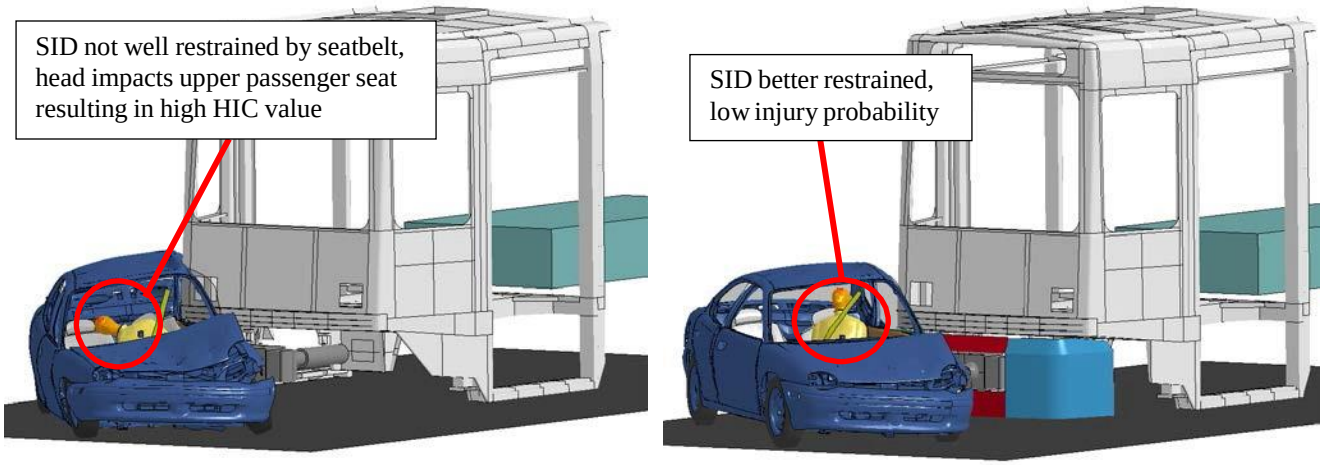

a) Response without bumper

b) Response with bumper

Figure 10. Illustration of SID response during Neon oblique 20 mph impact scenarios.

Comparing all the scenarios analyzed and the resulting injury measures, it can be concluded that the bumper system adapted to the Sacramento RT CAF LRV significantly reduces struck vehicle occupant injury, compared with the current configuration without a bumper. The overall performance benefit is quantified in Table 1 by averaging the injury metrics over the range of scenarios considered. The table indicates remarkable improvement with the bumper system. For example, the raw HIC value was reduced by 85%, resulting in a HIC AIS 3+ (Serious) injury probability reduction of 66%. The scenarios resulting in pelvis accelerations above the 130 g threshold was reduced from 42% to 17%, which is a 60% overall improvement. Thoracic trauma index was also significantly reduced.

Table 1
Average Injury Measures With and Without the Bumper System

	Head Injury Criteria (HIC)			**Thoracic Trauma Index (TTI)**			**Pelvis Acceleration (g)**
	Raw	Injury Probability (%) AIS 3+	Injury Probability (%) AIS 4+	Raw	Injury Probability (%) AIS 3+	Injury Probability (%) AIS 4+	
Average without Bumper	3,027	52.4	44.3	134	41.1	27.2	117
Average with Bumper	442	17.9	6.5	79	3.8	0.2	88
Percent Reduction	−85%	−66%	−85%	-41%	−91%	−99%	−25%

5.4. TASK 3: DETAILED BUMPER DESIGN DEVELOPMENT

After demonstrating the safety improvement potential of the basic adapted design with rigid elements, the detailed, deformable structural bumper design was addressed. The detailed design was developed by revising to the existing finite element (FE) model. A key goal of the design is that it should be able to survive a 20 mph collision without failure or significant damage. This will allow an LRV to return to service quickly after an accident and will minimize repair and maintenance costs. As such, the FE model was adapted to have realistic design element and deformable material models. Crash analyses were performed for each design iteration to evaluate its survivability.

Several other considerations guided the design approach. Minimization of the bumper system weight is important because the bumper is supported by the cantilevered coupler. Clearance between the bumper and the LRV underframe structure with the car's typical operational envelope was factored into the design. Bumper system cost and producibility were also considered during the design process.

5.4.1. Detailed Bumper Design

The key elements, function, and details for the detailed bumper system design developed for the Sacramento RT CAF LRV is shown in Figures 11–14. Overall, the functionality is the same as the basic design adaptation performed in Task 1. A deformable steel underframe with a fiberglass exterior cover was developed to survive the crash loads and to minimize system weight.

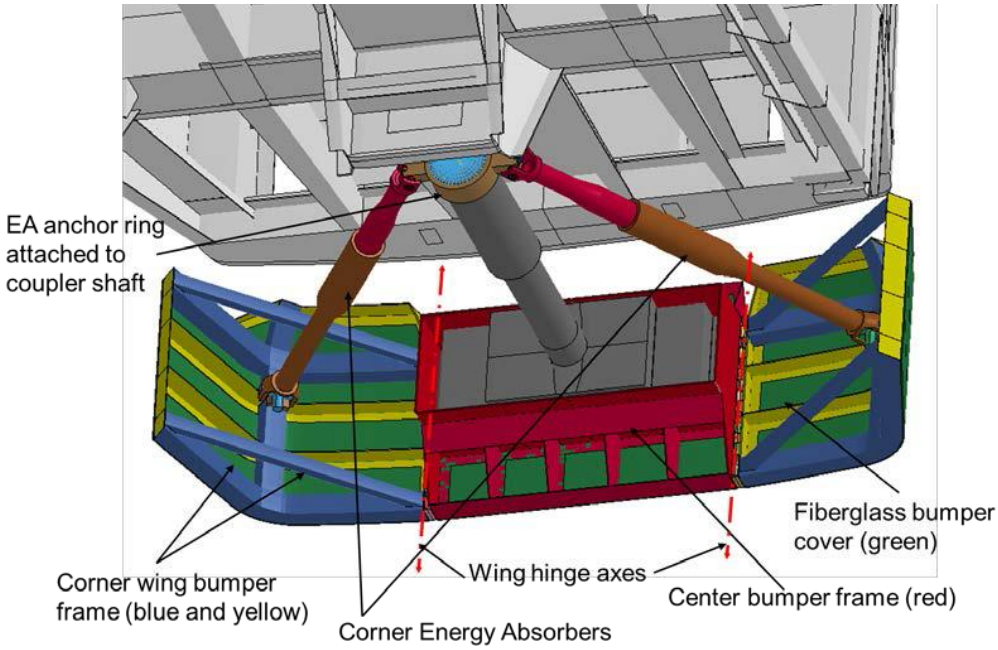

Figure 11. LS-DYNA model of the detailed bumper design retrofit to the Sacramento RT CAF LRV.

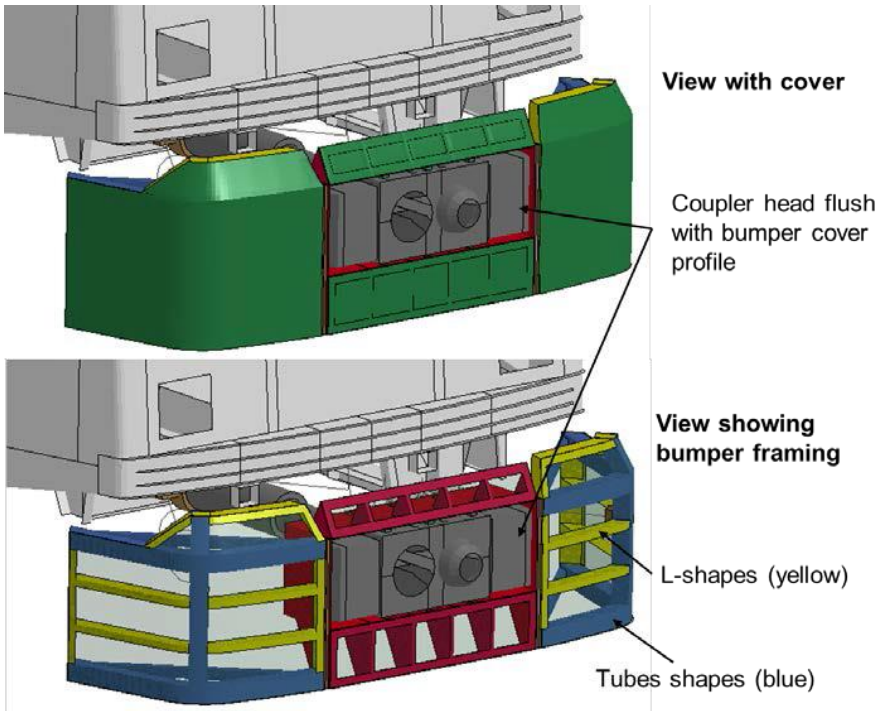

Figure 12. Front view of bumper with and without the fiberglass cover.

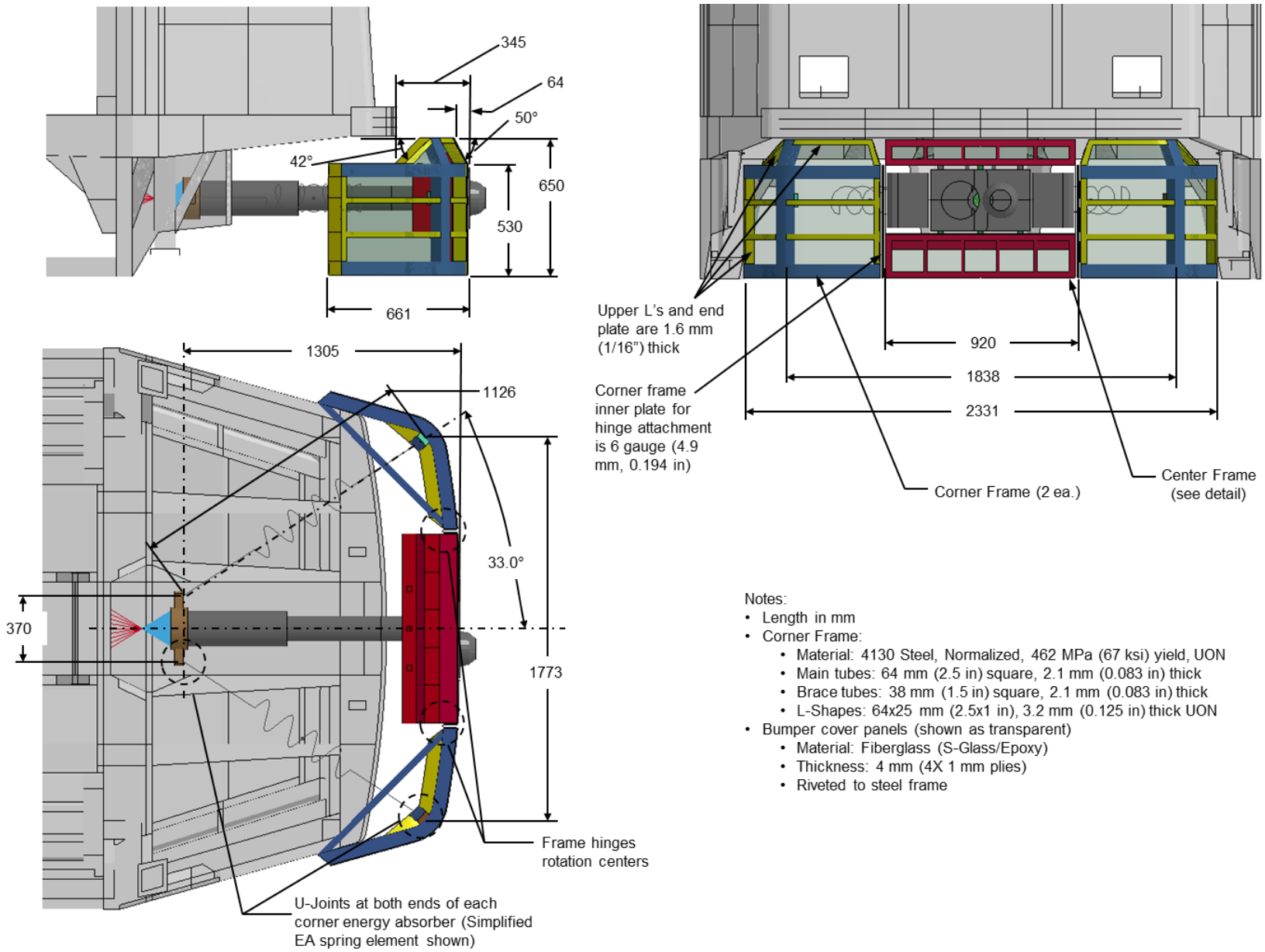

Figure 13. Detailed engineering sketches of the prototype bumper design.

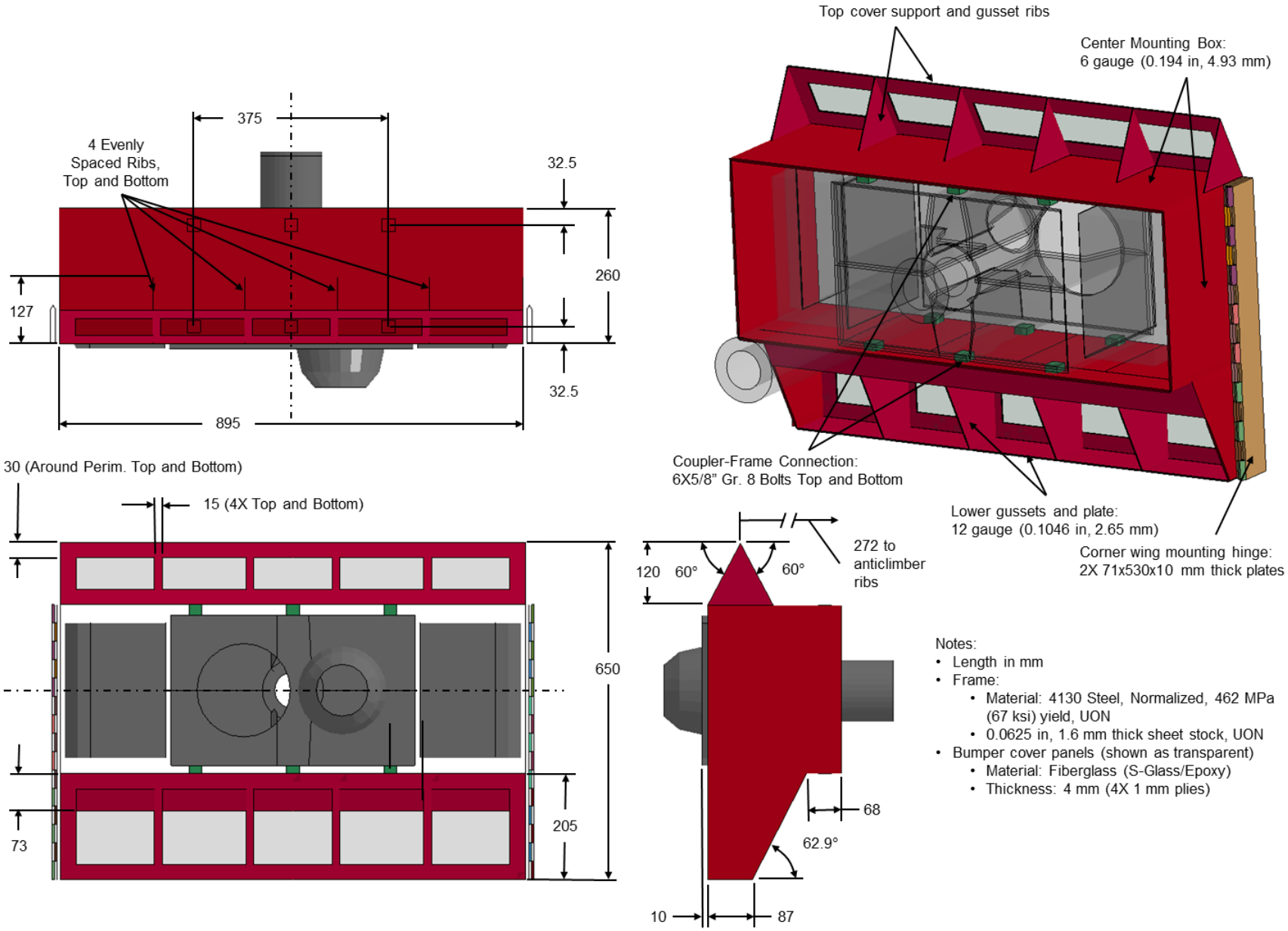

Figure 14. Detail of center frame and connection to coupler.

The design makes use of COTS items as much as possible to keep cost and manufacturing complexity low. The welded steel frame is built up from standard shapes and sheet stock. Standard fasteners will be used to bolt the center frame to the coupler. Further, simple bolted hinges are used to assemble the corner wings to the center frame. The bolted connections will allow for ease of maintenance, repair, and component replacement, if necessary. The highly stressed hinge was treated with some detail. Detailed fasteners were not modeled but connection forces were collected by the FE model to guide proper connection size selection.

The exterior shape of the detailed bumper design is largely the same as the basic Task 1 adapted design. Some minor changes were made to allow for bumper-car underframe clearances as the coupler pitches, yaws, and rolls in typical operation. Practical operational limits were considered, not absolute extremes. For this effort clearance is allowed for at least 30 degrees of yaw and 2–3 degrees of upward pitch, while the coupler is stroked inward up to 107 mm (4 in.). To accommodate the necessary clearance, the upper shelf and support gussets above the center frame box were trimmed down. Also, the upper section of the side of the wings was trimmed. Lastly, the side skirt was shortened by 4 inches to provide clearance for a combination of max yaw coupler compression. The revised shape provides roll clearance in excess of 3 degrees about the coupler axis. A comparison of the design with and without the changes, illustrating potential interference, is shown in Figures 15 and 16.

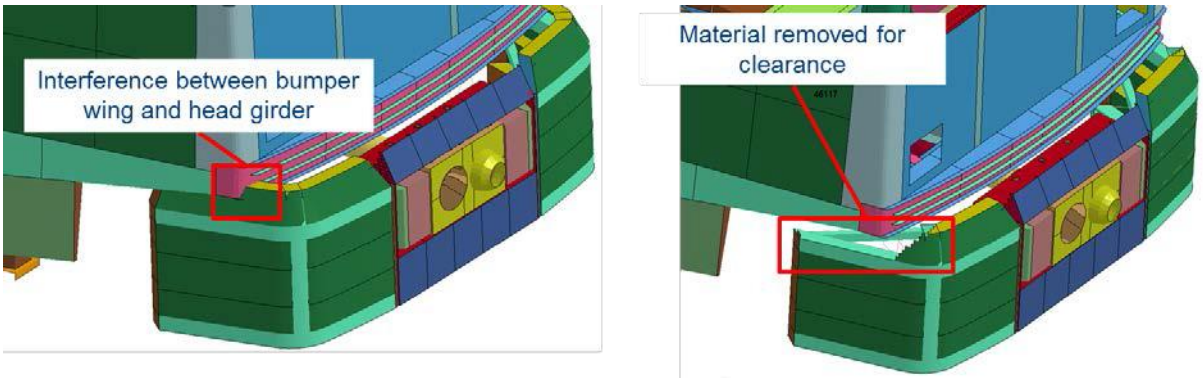

(a) Original (b) Modification for clearance

Figure 15. Interference resolution for centered, 107-mm (4- in.) compression, 3 deg. pitch up condition.

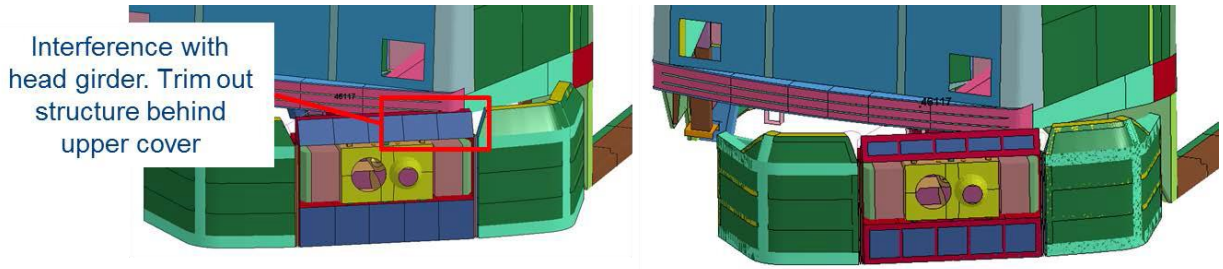

(a) Original (b) Modification for clearance

Figure 16. Interference resolution for 30 degree yaw, 2 deg. pitch up condition.

5.4.2. Weight, Support, and Locking Considerations

Goals to minimize the weight hanging on the coupler and to minimize changes required to the LRV were considered in the design process. The detailed design shown above weighs 113 kg (248 lb), which includes the bumper frame and cover. It does not include the corner absorbers, as the final absorber configuration has not yet been chosen. Potential weight savings could be realized through the use of more unique shapes and thicknesses. Also, higher strength steels could be used. Alternate design approached could also be considered. We believe an acceptable balance between weight, potential cost, and complexity has been achieved with the current design approach.

Two coupler lock concepts have been considered to prevent the coupler from swinging in the uncoupled, crash-ready configuration. The lock will fix the coupler to the LRV underframe and will ideally support the cantilevered coupler and bumper weight. One concept would utilize LRV-mounted, solenoid activated engagement brackets to capture the bumper center frame. This concept would likely require the least amount of LRV integration. A drawback is that the coupler would bear the weight of the cantilevered bumper when unlocked. However, in the unlocked bumper/coupled car configuration, the tight face-locking coupler interface inherently provides additional shared support through an effectively continuous beam supported at each coupler anchor. This configuration will better support the additional bumper weight concentrated at the coupler heads. Another concept is a carrier system that would support the coupler and additional bumper weight in locked/uncoupled and unlocked/coupled configurations. Coupler carriers are widely used in the rail community and have demonstrated performance. Integration of a central lock would be straightforward. Disadvantages with this approach are added cost and LRV integration complexity. Detailed design of the coupler lock and support has been deferred to planned follow-on development activities, when the team expects to incorporate required coupler design expertise.

5.4.3. Corner Energy Absorber Selection

Corner energy absorption performance requirements were considered in the original bumper design research efforts. The road vehicle crash loads and requirements from the energy absorbers are the same for this Sacramento RT CAF car design. Thus, the same approach and EA selection was adopted for this design.

Based on the previous segmented bumper CEM design study results, the best characteristics for the corner energy absorbers are to provide a 90 to 100 kN peak load with a stroke of 203 mm (8 in.) or more. Several hydraulic energy absorbers produced by Oleo International were considered. A hydraulic energy absorber was selected because it is fully recoverable after impact, minimizing the amount of repair time to an LRV after an accident. The products investigated from Oleo International can be tuned for a specific response. From Oleo, the Series 110 (shown in Figure 17) and Heavy Duty Series provide the right combination of peak load capacity (>350 kN) and maximum stroke (20 cm). Use of an absorber with a peak load capacity more than three times the design load prolongs the life of the absorber. Either product appears to be suitable for the prototype bumper. Energy absorbers from other manufacturers that meet the performance requirements can be substituted for the Oleo units considered. Final selection would be made based on cost and availability at the time of prototype production.

The FEA model for this project used a simple nonlinear spring element to represent the characteristics of the desired hydraulic EA. Use of universal joints at the ends of the EAs will allow for the necessary degrees of freedom as the geometry changes as the EAs and corner wings actuate under impact loads.

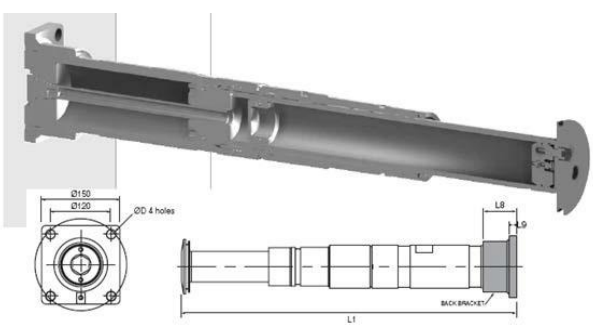

(a) Back mounted Oleo 110 Series Industrial Energy Absorber (16)

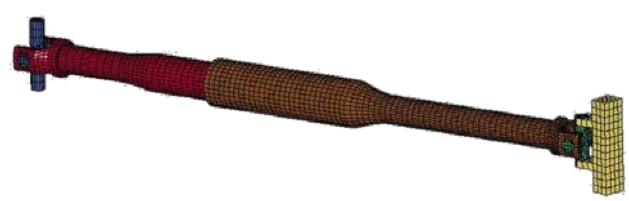

(b) Model of corner energy absorber with U-Joints at ends

Figure 17. Example corner energy absorber and simplified LS-DYNA model.

5.4.4. Crash Performance and Structural Survivability

The bumper was designed to withstand 20 mph crash loads with minimal damage and no failure. The intent is that the LRV could be driven away from the accident without the need for onsite, immediate maintenance. Minor damage such as

low level steel frame plasticity or local, repairable damage to the fiberglass bumper shell is considered acceptable. The system is designed to perform well for higher speed collisions as well. It is anticipated that the damaged components (frame subassemblies, fasteners, hinges) could be replaced. The composite shell could be repaired or replaced as necessary.

Crash damage of final design was evaluated in the normal and oblique impact conditions against the heavier vehicle from Task 2 (Ford Explorer), which results in the highest impact loads into the bumper structure. Fringes of plastic strain on the bumper frame for both impact scenarios are shown in Figure 18. Permanent damage to the bumper was minimal and localized. Plastic strains were well within the ductility of the selected material (typically 25% for normalized 4130 steel). Predicted damage to the fiberglass shell was superficial for both scenarios. Given the favorable crash performance, the 20 mph impact survivability design goal has been achieved. Note that the stresses and strains into the relatively rigid LRV car structure are very low and well below yield.

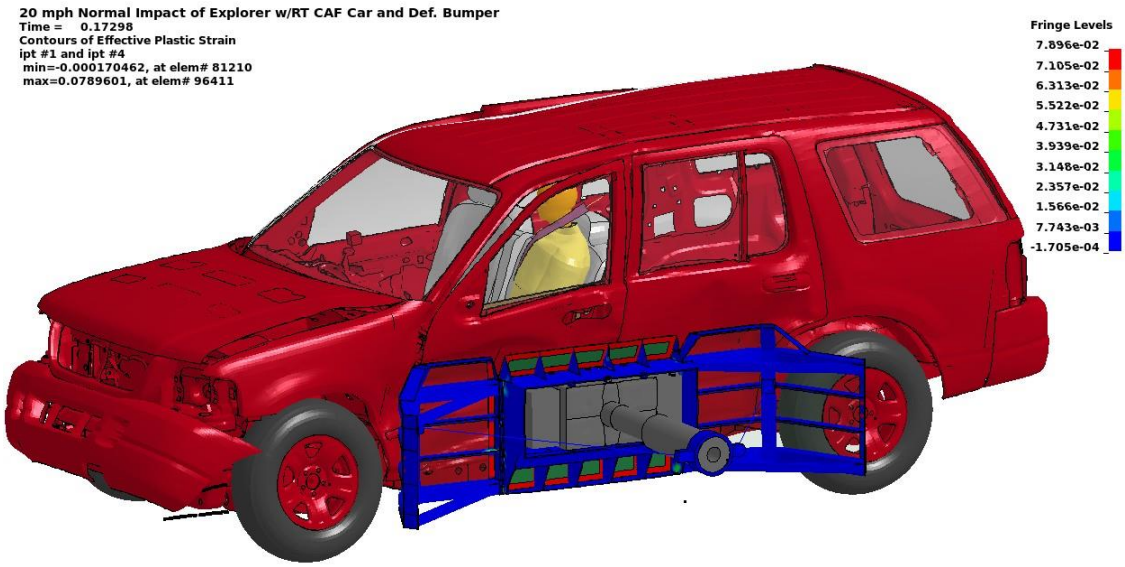

(a) Normal 20 mph impact of Ford Explorer. Peak plastic strain: 8%

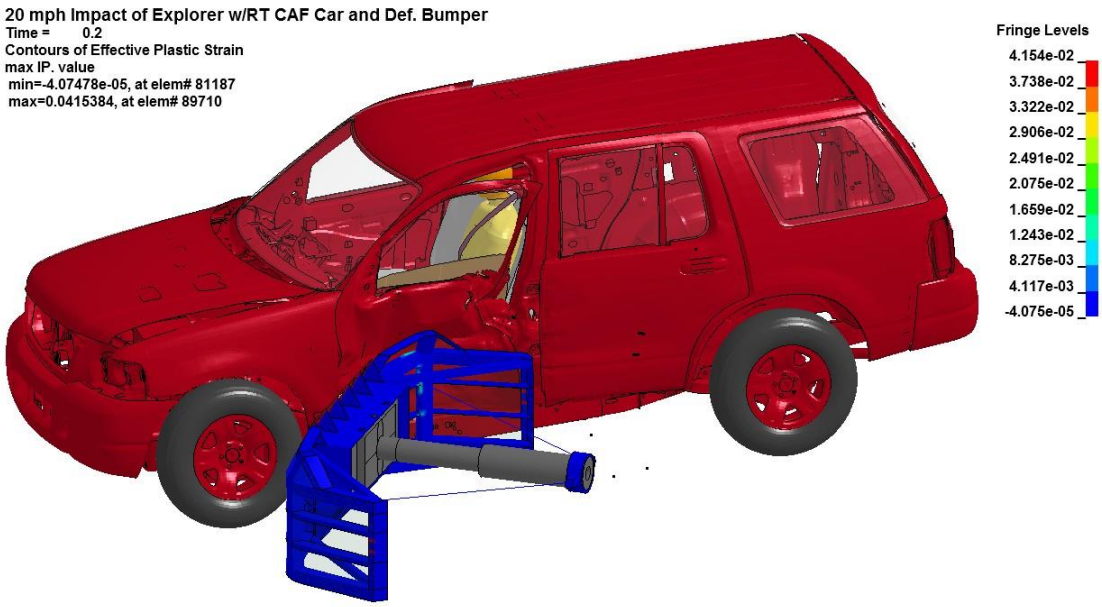

(b) Oblique 20 mph impact of Ford Explorer. Peak plastic strain: 4%

Figure 18. Evaluation of bumper structural damage during 20 mph impact scenarios with a heavy road car.

5.5. TASK 4: DEMONSTRATION AND VALIDATION TEST PLANNING

At the conclusion of this research, follow-on activities are planned to include a prototype fabrication and testing program to demonstrate the bumper design. As this is an innovative but unproven design, a test program will help to demonstrate its performance and to gain acceptance of the system and overall approach. Operational testing will help to develop and demonstrate the system in its normal use, integrated with the LRV. Direct crash testing will help validate and improve the models used to develop the system, as well as to demonstrate actual crash safety performance of the fully developed system. We anticipate the test program will be invaluable for identifying areas requiring improvement.

Preliminary project and test planning has been performed for the anticipated next phase of the product development. Planned testing will consist of operational and crash tests. Operational testing is planned to have an envelope testing phase with frangible mockups and a system testing phase with fully functional prototypes. Crashworthiness testing is planned to validate the analysis approach used in this research and to demonstrate the injury reduction potential of the bumper system. Preliminary plans for each test phase are included below. Specifics of the plan are subject to change, as follow-on activities are more firmly set. Details of the overall product implementation plan are included in the next section.

5.5.1. Envelope Testing

The team plans to design and produce four frangible models (e.g., wood and foam) of the bumper geometry and install them on all ends (coupled and uncoupled) of a two-car consist at the Sacramento RT maintenance facility. The team plans to instrument the LRV with lights and cameras to record potential interference during operations. The model will be coupler-mounted like the prototype bumper, move with the coupler, but breakaway should interference or problems occur without damage to the LRV car. The team will remove the models after operational testing.

A two-car consist is planned to be operated for one night through the full Sacramento line, with onboard engineering support from the team. After the test, the team plans to inspect the bumpers and analyze the data collected from the LRV-mounted cameras.

5.5.2. System Testing in Operational Environment

The team plans to fabricate and install four prototype bumpers for operational testing on Sacramento RT CAF cars. First, the team plans to perform static and dynamic yard checkout tests and function tests to include bumper locking, circuitry, and coupling/decoupling. Engineering plans to ride with Sacramento RT drivers for operational testing through the full LRV service line. Engineering staff plans to provide on-site maintenance and debugging support to address any issues from the first two nights of operational testing. Sacramento RT plans to then operate the LRVs over an extended period (approximately 30 days) and engineering staff will inspect the system periodically to make any needed adjustments. If during the extended operations testing window any collisions occur between the bumpers and road traffic, engineering staff plan to provide rapid response support and inspections. The prototype bumpers will be removed from the LRVs at the end of test operations.

5.5.3. Crashworthiness Testing

Currently, three crash tests on automobiles using an LRV test surrogate are planned: two tests against a compact car such as the Dodge Neon, and one test against a larger heavier vehicle such as the Ford Explorer.

Similar to the scenarios considered in this research, the tests are planned to be broadside and oblique impacts centered at the driver side B-pillar. Anthropomorphic Test Dummies (ATDs) will be positioned in the driver's seat of each automobile and each test will be recorded using high-speed photography. Vehicles will be instrumented with accelerometers, potentiometers, and so on, for comparison to analysis. The team will document damage to the automobiles, any damage to the bumper system, occupant injury response, and all other instrumentation results in a test report. The team plans to conduct post-test FE analysis, compare results with experiments, and iterate the design to make improvements, if needed.

6. PLANS FOR IMPLEMENTATION

Since being awarded this TRB grant, the team has pursued and been awarded an FTA grant to further the bumper development. During this direct follow-on project, the team will develop, build, and test the prototype LRV bumper design for service with Sacramento RT. Operational and crashworthiness testing will be conducted with prototype bumpers to demonstrate the system performance. The proven, tested bumper system will help to further implement and commercialize similar retrofits for other systems nationwide.

The bumper design developed during this TRB research project will be refined as necessary, built, and then validated through a series of functional, operational, and crash tests. The results of the testing will validate the models and demonstrate the overall predicted system performance. In preparation for fleet implementation and production, the validated models can be used to refine the bumper design and eliminate any deficiencies that may be identified.

The operational testing in this follow-on project will be conducted with bumper prototypes mounted to Sacramento RT cars, operating on existing service lines. The tests will be conducted to demonstrate overall system compatibility with the existing rail line operational envelope and between coupled cars with and without the retrofit bumper system.

The crashworthiness testing will be conducted with the bumper prototypes mounted to a representative surrogate test sled. Testing will consist of full-scale impact tests with automobiles and instrumented crash dummies. The collected data will be compared with the pre-test finite element simulations. Model refinements will be made as necessary to better match the tests. Any additional changes to the bumper design can be assessed using these updated and validated models.

At the conclusion of the planned follow-on project, a LRV bumper system with demonstrated improvement to automobile passenger safety will have been produced, tested, and implemented with an interested operator. After demonstrating the efficacy of the LRV bumper system through testing on Sacramento RT CAF cars, the larger goal is to implement this technology across the Sacramento RT CAF car fleet and spread the technology to other LRV fleets through retrofit and incorporation onto future LRV designs. Subsequent government funded research would likely not be required. Instead, the team will commercialize the technology and adapt it to other LRV cars. There are approximately 1,000 high floor LRV cars in North America that could all benefit from this technology. The goal is to pursue these and other markets worldwide.

7. CONCLUSION

This report summarizes the work performed toward the objectives of the Transit IDEA project "Development of a Prototype Retrofit Bumper for Improved Light Rail Vehicle (LRV) Safety." The purpose of this program is to adapt a previously developed conceptual LRV retrofit bumper design onto the Sacramento RT CAF LRV. The project builds on previous related research in which a segmented CEM bumper design was conceived and adapted to a high floor, open front end LRV. The system is a step forward in LRV crash safety design. The novel coupler-mounted bumper system can be retrofitted to existing fleets and new car designs to conform to new crashworthiness standards for road vehicle and pedestrian protection.

The project objectives have been accomplished. The bumper conceptual design was adapted to the Sacramento RT CAF LRV and crashworthiness analysis has been conducted to assess the system performance. The adapted design, developed in Task 1, takes into account the geometry and necessary clearances of the LRV, and incorporates the lessons learned from the original bumper concept optimization. Using similar methodology to previous development efforts, crashworthiness analyses were conducted during Task 2 for a suite of road vehicle impact scenarios. The efficacy of the bumper system was evaluated through struck vehicle occupant injury assessments. Comparing all the scenarios analyzed and the resulting injury measures, it can be concluded that the bumper system adapted to the Sacramento RT CAF LRV significantly reduces struck vehicle occupant injury, compared with the current configuration without a bumper. It also will help to reduce pedestrian injuries. Detailed structural design of the bumper system was conducted in Task 3. This includes the design of the primary bumper structural components, corner hinges, energy absorbing components, and

other key components critical to its function in normal service and during collisions. The system has been designed to survive frontal and oblique collisions with closing speeds of up to 20 mph. While providing greatly enhanced safety performance, the design strikes a balance for other key design considerations such as weight, cost, producibility, and serviceability. As part of Task 4, preliminary demonstration and validation test plans have been conceived.

The team has recently been awarded FTA grant funding to execute the planned prototype demonstration program. During this follow-on research, prototypes will be produced of the developed Sacramento RT CAF LRV bumper design. The prototypes will be used to demonstrate operational and crashworthiness performance. Two test programs are planned: one for in-service operational testing on the Sacramento RT line and another for full-scale crashworthiness tests against road vehicles. At the conclusion of the pilot project, the bumper with demonstrated performance will have been produced and implemented with an operating LRV fleet. The medium term goal is to outfit the entire Sacramento RT LRV fleet with the test-proven system. The overall bumper concept is highly adaptable such that it can be retrofit to other in-service LRV systems or incorporated into new designs. Longer-term, the goal is to commercialize and more widely implement the bumper system with other LRV fleets nationwide and internationally.

8. INVESTIGATOR PROFILE

The work was performed by Applied Research Associates (ARA) in partnership with a car manufacturer, Siemens Industry (Siemens), and with support from the LRV operator Sacramento Regional Transit (RT).

ARA personnel in the Silicon Valley Office (SVO) have been engaged in research on the crash response of vehicles, occupants, right-of-way structures, and roadside hardware for more than 25 years. These studies included detailed finite element simulations, crash testing, and analytical crash modeling. Applications include both vehicle and hardware crashworthiness design and forensic crash analyses. ARA SVO has decades of combined experience in applying LS-DYNA to a wide variety of crash, blast, and impact applications. All personnel have vast capability for creating and manipulating FEA models, running LS-DYNA for crashworthiness applications, simulation data analysis, and model validation. We also have extensive experience in designing and testing crashworthy and energy absorbing structures applied to light and heavy rail applications.

Siemens Industry is a leading international supplier of heavy and light rail cars and locomotives, as well as aftermarket products and services. Many of the LRVs in North America have been designed and produced in their Sacramento, California, facility.

Dr. Steven Kirkpatrick is a Principal Engineer at Applied Research Associates, Inc. and Director of a Federal Highway Administration Center of Excellence in Finite Element Crash Analysis. Over his 30-year career, Dr. Kirkpatrick has performed a wide range of crashworthiness and structural dynamics research.

In the rail crashworthiness community, Dr. Kirkpatrick has performed research and design projects with both rail transit agencies and equipment manufacturers. Dr. Kirkpatrick is a member of the ASME RT-1 Committee developing safety standards for light rail vehicles and was the Principal Investigator for the TCRP Project C-17 to develop crash energy management performance requirements for light rail vehicles and the FTA project to improve collision safety for LRVs in shared right-of-way street environments.

Mr. Robert MacNeill, Senior Mechanical Engineer with Applied Research Associates, Inc., has 20 years engineering experience with specialized expertise in nonlinear dynamic finite element analysis applied to vehicle crashworthiness, transportation safety, blast, impact, and structural collapse. He is an adept user of LS-DYNA and is skilled at constructing complex parametric finite element models. He has lead or contributed to many rail-based crashworthiness programs involving design, testing, and analysis.

Dr. Robert Bocchieri has been Engineering Manager of the ARA Silicon Valley Office since May 2005. He has been responsible for managing and developing research projects in the field of solids and structural mechanics and fluid-structure interaction. Research topics include advanced materials testing and analysis, large-scale finite element simulations, nonlinear dynamic structural behavior, and fracture and failure of materials. Applications include crashworthiness and transportation safety, human injury modeling, impact and penetration, and blast effects on structures. Many projects have included large-scale modeling using the explicit finite element code LS-DYNA.

Mr. Glenn Gough, Siemens Industry, has more than 20 years of engineering and project management experience in the design, development, and implementation of light rail vehicles. Mr. Gough is currently providing technical leadership for Design, Production and Commissioning for the Carshell, Coupler, and Articulation Systems, and is responsible for Static, Dynamic and Vehicle Performance Calculations.

9. REFERENCES

1. Swanson, J.D. "Establishing the Needs—What Must We Design For?" Presentation to the RT-1 CEM Subcommittee Meeting, Colorado Springs, Colo., Sept. 30–Oct. 2, 2003.
2. Kirkpatrick, S.W., *Development of Crash Energy Management Performance Requirements for Light-Rail Vehicles*, ARA Final Technical Report, TCRP Web-Only Document 40, Final Report for TCRP Project C-17, April 2008.
3. Bocchieri, R.T., S.W. Kirkpatrick, R. MacNeill, C. Navarro-Northrup, B. Peterson and G. Gough, *Collision Safety Improvements for Light Rail Vehicles Operating in Shared Right of Way Street Environments*, ARA Final Technical Report to the Federal Transit Administration, Sept. 2009.
4. Image from Sacramento RT website [Online]. Available: http://www.sacrt.com/newlightrailvehicles.stm [accessed July 2015].
5. ASME Standard RT-1-2009, Safety Standard for Structural Requirements for Light Rail Vehicles, ASME, Three Park Avenue, New York, N.Y., 2009, 9780791832158, catalog.asme.org.
6. MacNeill, R. and S.W. Kirkpatrick, *Development of a Prototype Retrofit Bumper for Improved Light Rail Vehicle (LRV) Safety*, TRB Transit IDEA Program Stage I Report, Contract TRANSIT-77, SUB0000453, Oct. 2014.
7. *LS-DYNA Keyword User's Manual*, Livermore Software Technology Corporation, Version 971 Release 7, Apr.il 2014.
8. NCAC Finite Element Model Archive [Online]. Available: http://www.ncac.gwu.edu/vml/models.html.
9. LSTC Database of dummy and barrier models [Online]. Available: http://www.lstc.com/download/dummy_models.
10. Kirkpatrick, S.W., B.S. Holmes, T.C. Hollowell, C. Gabler, and T. Trella, "Finite Element Modeling of the Side Impact Dummy (SID), Human Surrogates: Design, Development, & Side Impact Protection," SAE Publications, SP-945, Presented at the 1993 International Congress and Exposition, SAE Paper No. 930104, Mar. 1993, pp. 75–86.
11. Ray, M.H., K. Hiranmayee, and S.W. Kirkpatrick, "Performance Validation of Two Finite Element Models of a Side Impact Dummy," *International Journal of Crashworthiness*, Vol. 4, No. 3, 1999, pp. 287–303.
12. Eppinger, R., E. Sun, F. Bandak, M. Haffner, N. Khaewpong, M. Maltese, S. Kuppa, T. Nguyen, E. Takhounts, R. Tannous, A. Zhang, and R. Saul, "Development of Improved Injury Criteria for the Assessment of Advanced Automotive Restraint Systems– II," NHTSA, Washington, D.C., Nov. 1999.
13. Gibson, T., B. Fildes, H. Deery, L. Sparke, E. Benetatos, M. Fitzharris, J. McLean, and P. Vulcan, *Improved Side Impact Protection: A Review of Injury Patterns, Injury Tolerance and Dummy Measurement Capabilities*, MUARC Report 147, Aug. 2001.
14. Federal Motor Vehicle Safety Standard (FMVSS) 214 "Dynamic" Side Impact Protection, NHTSA, Washington, D.C., Dec. 2006.
15. Arbelaez, R.A., B.C. Baker, and J.M. Nolan, "Delta Vs for IIHS Side Impact Crash Tests and their Relationship to Real- World Crash Severity," Paper Number 05-0049, Insurance Institute for Highway Safety, Arlington, Va.
16. Oleo International, Industrial 110 Series Bochure [Online]. Available:

http://www.oleo.co.uk/uploads/img4642de72b49ca1.pdf.