TRANSPORTATION RESEARCH BOARD
NATIONAL RESEARCH COUNCIL

IDEA

Innovations Deserving Exploratory Analysis Project

NATIONAL COOPERATIVE HIGHWAY RESEARCH PROGRAM

Report of Investigation

IDEA PROJECT FINAL REPORT

Contract NCHRP-31

IDEA Program
Transportation Research Board
National Research Council

April 1998

Cost-Effective Microwave Sensing of Highway Road Conditions

Prepared by:
Robert F. Kubichek
Suzanne Yoakum-Stover
University of Wyoming
Laramie, Wyoming

INNOVATIONS DESERVING EXPLORATORY ANALYSIS (IDEA) PROGRAMS
MANAGED BY THE TRANSPORTATION RESEARCH BOARD (TRB)

This NCHRP-IDEA investigation was completed as part of the National Cooperative Highway Research Program (NCHRP). The NCHRP-IDEA program is one of the four IDEA programs managed by the Transportation Research Board (TRB) to foster innovations in highway and intermodal surface transportation systems. The other three IDEA program areas are Transit-IDEA, which focuses on products and results for transit practice, in support of the Transit Cooperative Research Program (TCRP), Safety-IDEA, which focuses on motor carrier safety practice, in support of the Federal Motor Carrier Safety Administration and Federal Railroad Administration, and High Speed Rail-IDEA (HSR), which focuses on products and results for high speed rail practice, in support of the Federal Railroad Administration. The four IDEA program areas are integrated to promote the development and testing of nontraditional and innovative concepts, methods, and technologies for surface transportation systems.

For information on the IDEA Program contact IDEA Program, Transportation Research Board, 500 5th Street, N.W., Washington, D.C. 20001 (phone: 202/334-1461, fax: 202/334-3471, http://www.nationalacademies.org/trb/idea)

TABLE OF CONTENTS

EXECUTIVE SUMMARY

CONCEPT

Increasingly, state and local highway departments must maintain more roads with fewer personnel, older equipment, and declining budgets. Low-cost winter road condition sensors would provide a means to leverage limited human resources by concentrating maintenance efforts where they are needed most. High-resolution real-time road information would also benefit winter travelers by removing much of the guesswork of deciding when to travel and what routes are safest.

The purpose of this project is to develop a new method for measuring moisture, snow, and ice accumulation on roads and highways using microwave-sensing techniques. By using active techniques, i.e., using a microwave probe signal, the sensor will be sensitive to small changes in road condition while remaining relatively immune to effects of blowing snow, antenna icing or changes in humidity. Microwave sensors will instantly detect degrading road conditions due to rapidly evolving weather systems and eliminate inherent delays associated with eyewitness reporting methods.

A further benefit stems from the portability of microwave sensors. They can be easily installed at dangerous curves, mountain passes, and other sites as needed. Because they can take advantage of adaptive signal processing techniques such as neural networks, they could be re-deployed easily and quickly in response to changing weather or traffic concerns.

The proposed system works by switching a low-power microwave signal between two high-gain antennas pointed toward reflectors on the far side of the road (Fig. 1). The upper reflector ("R") directs the signal back towards the road surface, where it reflects up to the receive antenna. The lower reflector ("D") directs signal energy directly back across the road without reflection from the road. The magnitude and phase of the reflected signal contains information about the amount and type of precipitation on the road surface. The direct signal takes almost the same path, but does not undergo a road reflection. Thus, it provides a reference that can be used to subtract out time-varying effects common to both signals but unrelated to road surface conditions. For example, variation due to antenna icing contains no useful information about the road surface and could be removed from the data by means of the direct signal reference. In this design, the transmitter and receiver electronics are located together on the same side of the road. This insures phase lock between the transmit and receive signals for better performance, and provides cost savings through simpler system design. Uncertainty in interpreting the data is reduced by operating at two separate frequencies of 2 and 10 GHz. Dual frequency operation effectively doubles the available information about the amount and type of precipitation on the road.

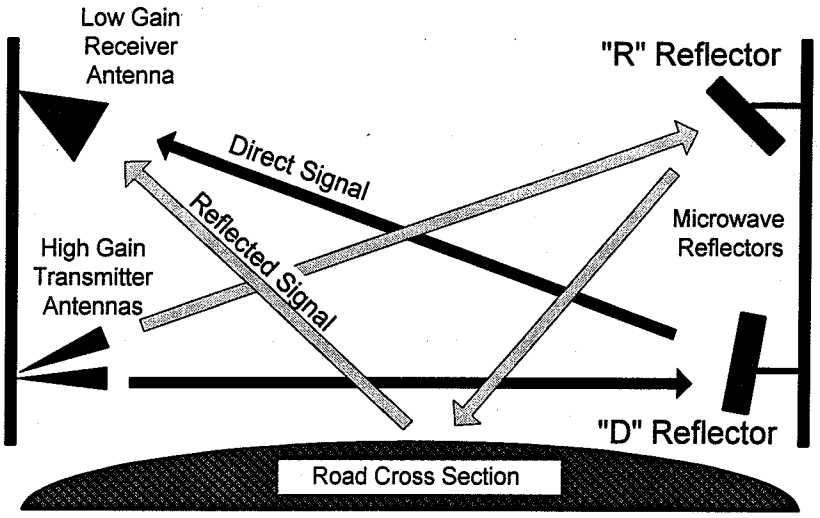

FIGURE 1 Antenna and reflector geometry, showing reflected and direct paths. Shown is the 10 GHz; an identical 2 GHz system is implemented using dish antennas. This setup allows all electronics to be located on the same side of the road.

INNOVATION

Several other approaches to this problem have been developed. One widely used sensor system offered commercially by Surface Sensors Incorporated (SSI) detects wet or icy road conditions by measuring temperature, moisture, and chemical content using sensors embedded in the highway surface. The system is widely used, but has disadvantages of high cost and being fixed at a permanent location. Microwave-based systems have also been studied *(1-6)* but in general have had problems associated with sensitivity to antenna icing and system temperature, as well as the requirement for frequent re-calibration. The innovations represented by our approach surmount these problems by including the use of two separate frequencies, the use of a direct beam path to provide a reference signal, and the use of an antenna/reflector system to improve performance and reduce costs.

PROJECT ACCOMPLISHMENTS

The basic system was designed and built over the summer and fall of 1996. Following laboratory tests, it was installed at an outdoor paved-road location where data was collected during late March through early May 1997. Pattern recognition techniques were applied to identify road conditions based on microwave signatures, and yielded 88-95% correct classifications of snowy, wet, and dry roads, with poorer performance for slush conditions of 16-48% correct. (Icy road conditions were not prevalent enough to be included in the test). Much of the classifier error can be traced to unexpectedly high variations in the daytime measurements, as well as several system problems that were later resolved.

These results are very are promising, but suggest additional effort to resolve unexplained poor performance for some road conditions. Currently, it is felt that interference and internal reflections in the breadboard layout cause much of the observed problems. If so, follow-on operational tests should employ professionally manufactured transceivers using miniaturized strip-line construction. UW will partner with a microwave system design company for this stage of the project.

FIGURE 2 2 GHz (left) and 10 GHz (right) transmitter antennas.

IDEA PRODUCT

The product of this research project is a system design concept for measuring microwave reflection signatures from a road surface. Salient features include:

- A superheterodyne transceiver design for measuring magnitude and phase components at both 2 and 10 GHz under computer control. The system measures both a road-reflected signal to determine road cover, and a direct signal to remove unwanted common mode variations such as power supply fluctuations, in order to isolate road-related data.
- Data acquisition system to control and monitor signal measurement in a Labview environment.
- Antenna and reflector design to minimize mixing between direct and reflected signals.

The system was designed to facilitate modifications of the transceiver circuit as dictated by experimental results. The resulting breadboard layout is thus a useful research tool, but has a disadvantage that stray reflections and interference signals internal to the system are more difficult to control and eliminate than if the system were constructed using printed circuit and strip-line construction techniques.

CONCEPT AND INNOVATION

Today, information about rural wintertime driving conditions comes mainly from highway police and snowplow operators who continually survey thousands of miles of roads and highways. Such information is crucial to winter travelers as well as highway officials responsible for road maintenance. However, as highway department resources become scarcer, it is increasingly difficult to deliver up-to-the-minute road reports during periods of rapidly changing weather, especially for remote, rural, or infrequently traveled roads. Highway engineers have partially addressed this problem by using embedded pavement sensors to

provide continuous condition reports from outlying areas. However, the high cost of these systems limits their use to a few select locations.

A microwave-based system could have significant benefit to highway maintenance departments if the ultimate cost remains reasonably low. A rough cost estimate is possible by looking at commercial microwave devices that are similar in design. For example, a variety of off-the-shelf intruder alarms are available with costs starting at $100. These textbook-sized units include essentially the same electronic components as the proposed system: a low-power microwave transmitter, receiver, antenna, microprocessor, and passive infrared detector. At the other end of the scale, police radar guns are similar in design though much more sophisticated than the proposed system, and cost $1000 to $2000. For example, a sport radar gun sold by Radar Sales of Minneapolis, MN sells for $1295 and can track a baseball at up to 300 feet. Road condition sensors will be produced in smaller quantities, and must be weatherproofed and rugged enough to operate in harsh outdoor conditions. Thus, final costs could be expected to range two to three times higher, or $2000-$6000.

Currently, the only commercially available system for road surface measurement is the one offered by Surface Sensors Incorporated. The system measures temperature, moisture, and chemical content using sensors embedded into the highway surface and includes an atmospheric weather station located nearby to provide air temperature, wind, humidity, and other data. Personnel at a central location interpret the combined weather and sensor information to infer surface icing and moisture conditions.

The SSI system has several relative disadvantages, however: (1) unlike a microwave system, it provides a *point* measure of the surface; that is, it only senses the conditions in the immediate vicinity of the sensor. It would not, for example, be able to detect if nearby road conditions were substantially different from those at the sensor location. Furthermore, the system gives no information about the amount of ice, snow, or water accumulation; (2) it is expensive to buy, install, and operate, with costs ranging from $20,000 to well over $50,000. The system also requires a human operator to interpret the sensor and weather data, and develop a surface road condition prediction. As a result of high system costs, the number of installed systems remains quite low. For example, there are fewer than 20 operational sites in the state of Wyoming. Microwave detectors will not require human operators, and should be much less expensive. (3) Embedded sensor technology is expensive to maintain. Unlike pole-mounted microwave sensors, the embedded sensors can be damaged by snow plowing, sanding, paving, repair, and other standard road maintenance operations. As a result, periodic repair or replacement of the sensor is required. (4) Finally, embedded sensors are fixed in place making it impractical to relocate the sensor stations to meet changing conditions and needs. In some situations, however, the capability to re-deploy the sensors because of new traffic patterns, or adjust to different maintenance policies would be quite useful. Microwave detection systems would provide this flexibility. Once again, the innovations represented by our approach include the use of dual frequencies, a direct beam reference signal, and an antenna/reflector system designed to improve performance and reduce costs.

Low-cost surface condition sensors would have numerous applications. Transportation agencies are constantly seeking new ways to achieve better maintenance and increased highway safety with reduced funding. The microwave sensors could be deployed relatively quickly at many remote locations to provide better, faster, and cheaper road reports, even with fewer personnel available to survey the road system. The result is improved traveler safety and more efficient highway maintenance procedures.

INVESTIGATION

An initial pilot study was funded by the University of Wyoming beginning in 1995 to confirm the basic concept of microwave detection of road conditions. Computer modeling provided estimates of microwave reflection properties for various road conditions. To check computer results, a 20-40 GHz system was assembled and experiments were conducted using a liquid-nitrogen cooled simulated road surface (*7*).

Based on promising pilot study results, a more advanced design was developed for the NTRB IDEA proposal. When funding was approved, additional computer simulations were conducted to provide a more precise understanding of the influences of microwave frequency, temperature, salinity, and snow density. It was determined that dual frequencies of 2 and 10 GHz would provide good sensitivity to thin ice and snow layers as well as furnish information about water salinity. The system design, experimental setup, and data analysis are discussed in the following sections.

PHYSICAL CONCEPTS

Microwave radiation is well suited for this application because it is sensitive to the physical properties (such as moisture and salinity content) of material on the road surface. Changes in these properties produce variations in the dielectric constant, which in turn controls the magnitude and phase of waves reflecting off the material surface. The short wavelength of the microwave signal allows interaction with thin layers of ice, snow, and moisture on the road surface to further modify the reflection signature. The use of microwave frequencies also leads to efficiencies in terms of smaller component and antenna size.

The characteristics of the reflected signal depend on a variety of factors. Some of the factors are fixed during system design such as the angle of incidence - the angle at which the microwave beam intercepts the road surface; antenna polarization - either vertical or horizontal; and frequency. Other factors depend on physical quantities that we wish to measure or detect including the presence of ice, snow, or moisture on the road surface; and the presence and thickness of water layers. Moisture content primarily affects the reflection amplitude, while layering causes changes in both the magnitude and the phase. Finally, a number of other factors unrelated to road surface accumulation can cause unwanted variations in the measured signal. Examples include ice and moisture accumulation on the antennas, power supply and temperature fluctuations within the system electronics, falling snow, and changes in atmospheric humidity. These problems have hampered earlier attempts at developing microwave-based sensors, but we feel can be solved using a direct reference signal and using dual frequencies.

The dielectric constant of a material determines the scattering characteristic of microwaves by the material. By observing the propagation of microwaves in the medium, one can derive information about the dielectric constant, which in turn gives insight into the physical properties of the material, such as its moisture content, density, and temperature. We use the following notation for the complex dielectric constant

$$\varepsilon = \varepsilon' - j\varepsilon''$$

where ε' is the permittivity, and ε'' is the dielectric loss factor.

The differences in the dielectric constant among the various media cause the wavefront to bend, reflect, or refract at an interface. Snell's law of refraction determines the angle or direction of transmitted and reflected electromagnetic waves as shown in Figure 3.

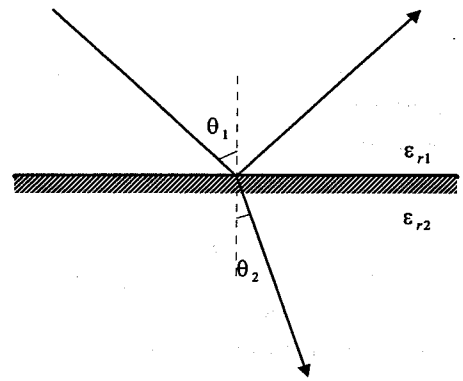

FIGURE 3 Refraction and reflection in a two-layer media.

Snell's law in the case of nonmagnetic media is

$$\frac{\sin\theta_1}{\sin\theta_2} = \sqrt{\frac{\varepsilon_{r2}}{\varepsilon_{r1}}}$$

where θ_1 and θ_2 are the angles of the incident and transmitted waves, and ε_{r1} and ε_{r2} are the relative dielectric constant values of the corresponding media.

Employing Maxwell's equations and applying the boundary conditions at an interface, the Fresnel's reflection coefficients can be calculated *(8)*. The change in the amplitude and phase of the reflected wave are given by the reflection coefficient. For a wave polarized perpendicular to the scattering plane, the reflection coefficient is given by

$$R_{12}^{\perp} = \frac{\sqrt{\mu_{r2}/\varepsilon_{r2}}\cos\theta_1 - \sqrt{\mu_{r1}/\varepsilon_{r1}}\cos\theta_2}{\sqrt{\mu_{r2}/\varepsilon_{r2}}\cos\theta_1 + \sqrt{\mu_{r1}/\varepsilon_{r1}}\cos\theta_2}$$

and for a parallel polarized wave it is

$$R_{12}^{\parallel} = \frac{\sqrt{\mu_{r1}/\varepsilon_{r1}}\cos\theta_1 - \sqrt{\mu_{r2}/\varepsilon_{r2}}\cos\theta_2}{\sqrt{\mu_{r1}/\varepsilon_{r1}}\cos\theta_1 + \sqrt{\mu_{r2}/\varepsilon_{r2}}\cos\theta_2}$$

The media is assumed to be nonmagnetic; therefore the permeability values (μ_r) are unity *(9,10)*. For a three-layer media shown in Figure 4, the overall reflection coefficient is given by

$$R = \frac{R_{01} + R_{12}\exp(-j2k_{1z}d_1)}{1 + R_{01}R_{12}\exp(-j2k_{1z}d_1)}$$

where

$$k_{1z} = \left(\omega^2\mu_{r1}\varepsilon_{r1} - \omega^2\mu_{r0}\varepsilon_{r0}\sin^2\theta_0\right)^{1/2}$$

$$= \omega\sqrt{\mu_{r1}\varepsilon_{r1}}\cos\theta_1$$

is the propagation factor, and d_1 is the thickness of the middle layer. The total reflectivity is given by

$$\Gamma = |R|^2 .$$

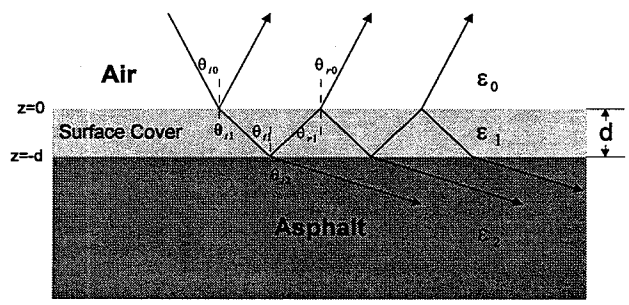

FIGURE 4 Three layer surface model.

As can be seen, the reflection coefficient R is related non-linearly to the dielectric constant of the materials and the depth of the layers. If the magnitude and phase of R can be measured by a microwave system, it should be possible to infer the amount and type of accumulation of material on the road surface. The method for extracting reflection coefficient information is described in the following sections.

SYSTEM DESIGN

The transceivers, antennas, and reflectors were designed, assembled and tested during summer and fall of 1996. A high-level diagram of the system is shown in Figure 5 and explained in this section. To begin, the 2 and 10 GHz receiver inputs each use a single antenna to receive both the direct and reflected signal. The transmitted signals are alternately switched under computer control to drive either a "reflected" antenna (which is oriented so that the signal will bounce off the road) or a "direct" antenna (which causes a direct path to the reflector and back to the receive antenna). The signals that control switching are generated by a

National Instruments PC-Plus acquisition board under LabView software control. Another digital control signal is generated to determine which received signal (either the 2 GHz or the 10 GHz signal) is input to the analog-to-digital (A/D) converter for processing by the computer. In practice, the system will alternately switch between direct/2 GHz, reflected/2 GHz, direct/10 GHz, and reflected/10 GHz. The A/D converter uses two analog input channels to acquire the in-phase ("I") and quadrature ("Q") components from the selected 2 or 10 GHz receiver output. Thus, eight values are measured by the system corresponding to combinations of direct and reflected, 2 GHz and 10 GHz, and in-phase and quadrature components. Data values are stored with a time stamp for later processing and analysis.

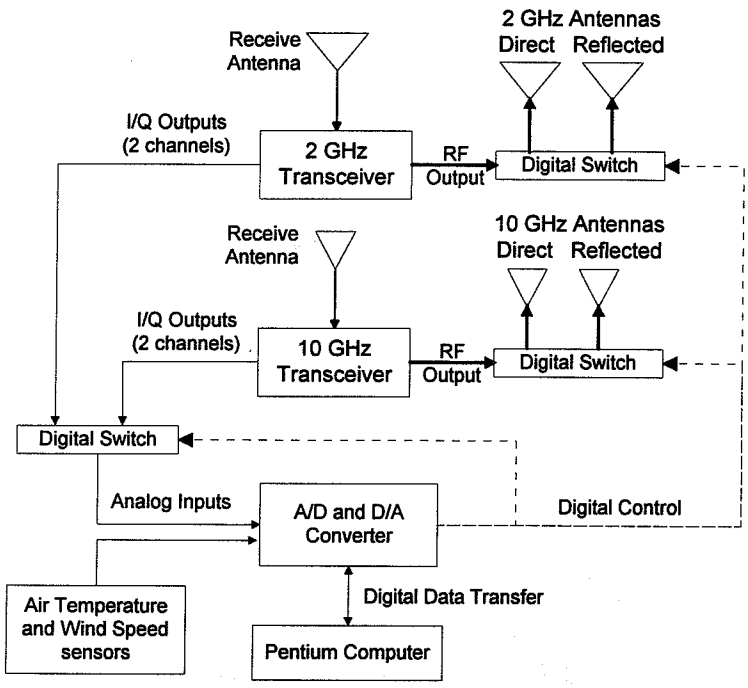

FIGURE 5 High level system diagram.

The 2 and 10 GHz transceivers are incorporated into one system in order to share components and simplify design. A superheterodyne receiver design with an intermediate frequency (IF) of 200 MHz was chosen to provide better noise immunity than a direct conversion design. The 10 GHz horns and reflectors were set up approximately as shown in Fig. 1. The 2 GHz dishes are not shown in the figure, but were configured similarly. All dishes and horns were fabricated by UW students and have approximately 20 dB gain each.

The design in Fig. 1 turns out to have a problem, however. As described earlier, the direct signal is nearly identical to the reflected signal except it has not undergone a road reflection. It can therefore be used as a reference to remove unwanted components of the signal common to both direct and reflected signals. If the transmitter antenna gains are not impracticably high, however, A significant portion of the direct beam will also hit reflector "R" so that the resulting signal will contain a mix of both reflected and direct elements. When this happens it is no longer effective as a reference signal. A second configuration has been developed to address this problem and is shown in Fig 6. This uses a single transmitter antenna located in the center between two receiver antennas. The transmitter beam illuminates both the reflectors, and the highly collimated return signals can be isolated to either the D or R antenna by positioning the reflectors. This new

set up is effective and stable, and requires smaller (less wind load) reflectors than the original design. Tests during Fall 98 indicates much less mixing is present using this approach.

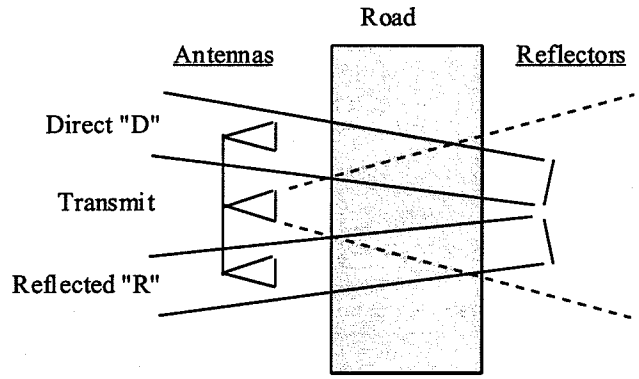

FIGURE 6 Top view of modified reflector / antenna plan to eliminate mixing.

A superheterodyne receiver system was developed to extract the magnitude and phase components as efficiently as possible. The design illustrated in the high-level diagram of Fig. 7 shows only the 10 GHz portion of the circuit for simplicity, and the 2 GHz design is nearly identical.

By using local radio frequency (RF) and intermediate frequency oscillators, the received signal is detected coherently giving in-phase and quadrature components, which are input to the computer's analog-to-digital converter for analysis. The magnitude G and phase θ of the received signal are obtained by

$$G = \sqrt{I^2 + Q^2}\text{, and } \theta = \tan^{-1}\frac{Q}{I}.$$

The direct D and reflected R signals can be represented as:

$$D = G \ \angle\theta$$
$$R = G\,G_r \ \angle(\theta + \theta_r)$$

where "∠" indicates the phase component. Here, G_r and θ_r represent the magnitude and phase component due exclusively to material on the road surface. Variables G and θ represent magnitude and phase elements common to both direct and reflected signals including unwanted gain and phase changes from antenna icing, power fluctuations, etc. These terms can be easily removed by using the direct signal as a reference and leaving only terms containing information about the road surface:

$$G_r = |R|/|D|, \textit{ and}$$
$$\theta_r = (\theta + \theta_r) - \theta = \tan^{-1}\left(\frac{Q_R}{I_R}\right) - \tan^{-1}\left(\frac{Q_D}{I_D}\right).$$

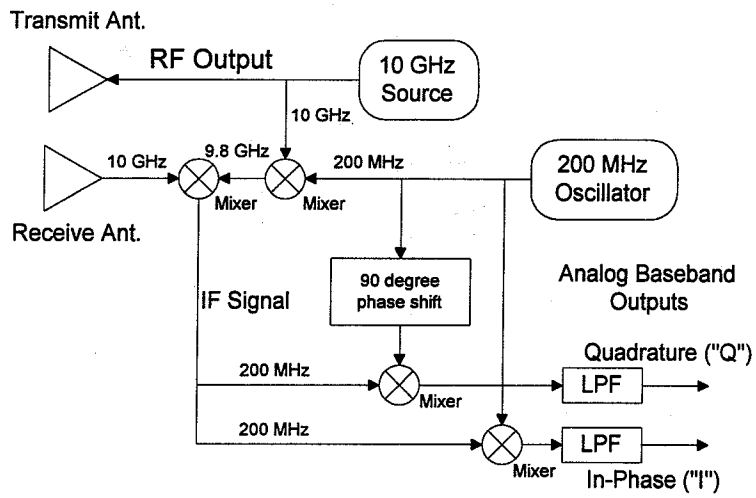

FIGURE 7 High-level diagram of 10 GHz superheterodyne receiver system.

Thus, the addition of the direct path signal provides a useful tool for stabilizing reflection measurements and making them robust against environmental influences unrelated to road condition.

DETAILS OF EXPERIMENT

The system was constructed, tested, and calibrated in a laboratory environment. The next task was to test the system at an outdoor location near the UW campus to facilitate any needed modifications. The final phase of the experiment was to deploy the system at a remote location where more severe winter weather could be expected. Also, this site was planned to be located on a highway near an SSI surface sensor to allow comparison of the two systems. Unfortunately, due to delays in fabricating the antennas and reflector mounts, the system was not fully operational at the local outdoor site until late February of 1997, and tests were not completed until May. Therefore, the last phase was not attempted because of prevailing summer weather conditions at the time. However, except for the comparison with SSI sensor equipment, most of the final phase experiments were conducted at the outdoor location in Laramie.

The outdoor test site experiment was set up on a paved street with moderate traffic within the city limits of Laramie, WY, and was operational from late-March 1997 through early May. During this time, a wide variety of road and weather conditions were recorded ranging from dry clear days to heavy snow and blizzard conditions. Approximately five weeks of data was collected. In early April, a small weather station was installed to collect information about temperature, humidity, wind, precipitation, and solar radiation at the site. A Pentium computer was used to control data acquisition using a Labview system developed for the project. All transceiver electronics, computer, and test equipment were housed in a mobile home located near the transmitter antennas. The antennas and reflectors were mounted on 18 foot-tall steel masts as shown in Figures 2 and 8.

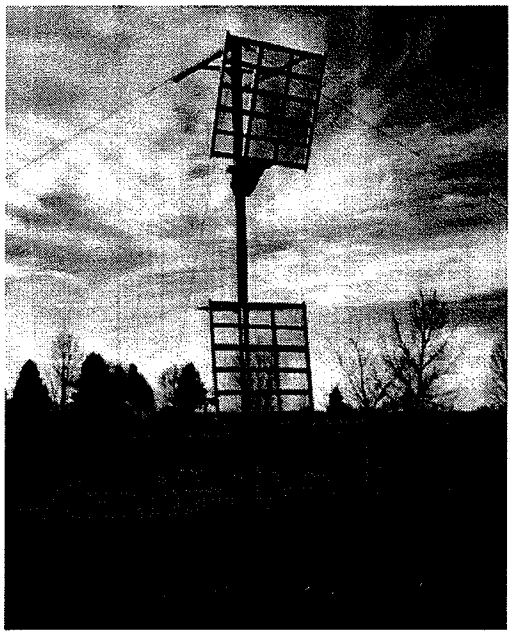

FIGURE 8 Direct (below) and reflected (above) reflectors on far side of road. Stiffeners used to reduce wind noise are apparent in the photo.

Although the system had been laboratory tested, significant effort was required for debugging at the outdoor test site. For example, the system initially exhibited high levels of measurement noise, which obscured road condition information. This was traced to flexing of the reflector panels under wind-loading conditions, and the problem was corrected by stiffening the panels (see Fig. 8). As another example, it was found that receiver mixers were occasionally saturating and reducing measurement quality. Although this was easily corrected by adjusting attenuator settings, the data collected after the adjustment could not be directly compared to earlier data. This significantly reduced the amount of data available for analysis.

System tests were terminated in early May when further ice and snow conditions became unlikely. Some problems remained unresolved at the end of the short test period. First, we were unable to subtract out unwanted environmental effects using the *direct* signal as a reference. As described earlier, analysis of the microwave path geometry indicated possible mixing between the direct and reflected signal. A second unresolved problem is large daytime variation in the 10 GHz measurement data appears unrelated to observed road conditions. The example shown in Fig. 9 indicates that most of the fluctuation occurs during daytime hours, implying that environmental factors are involved. Indeed there is some correlation with solar intensity fluctuations (presumably due to passing clouds), while correlation with temperature, wind, and other observed weather parameters is quite low. It is hoped that much of this variation can be removed using the direct signal reference and the new antenna geometry described above.

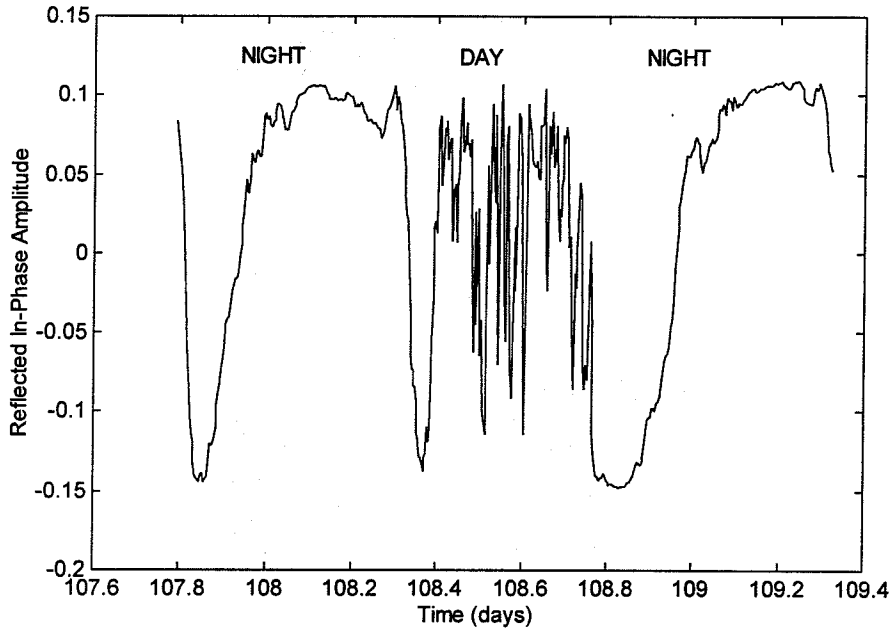

FIGURE 9 10 GHz data showing undesired variation during daytime hours.

Analysis of Data

Following a three week test and debugging session, data were collected beginning March 30 and continuing through May 15, 1997. During this period a number of late winter storm systems moved through the area producing snow, ice, slush, and wet road conditions. Three major adjustments were made to the system on April 1, April 3, and April 10 with the result that data taken during these periods can not be compared or analyzed together. Unfortunately, weather conditions following the April 10 adjustment improved markedly, and only two brief snow periods occurred during the period that accounts for the majority of the data.

The system was moved from its site on 19th Street in Laramie to a new location on the roof of the UW Physical Science Building in Fall of 1997. However, the data at this site is not comparable to earlier data because the antenna configuration was modified to reduce mixing as discussed earlier (see Fig. 6). Data from this location is still being studied, but it appears that the new setup does reduce mixing.

The recorded data consists of eight signals: 10 and 2 GHz in-phase and quadrature levels for both reflected and direct propagation paths. In addition, weather data was recorded beginning on April 8, 1998, including temperature, humidity, solar radiation, barometric pressure, precipitation, and wind direction and speed. Each microwave measurement is made by averaging the signal over a period of about 1 second. This was done to reduce thermal and other noise in the system. The averaged measurements were acquired at a rate of approximately 5 per minute. Since the resulting data files are quite large, much of the processing was done after decimating the data by a factor of 10. Essentially this entails low-pass filtering the data to prevent aliasing distortion, and then discarding 9 out of every 10 samples. Analysis showed that no useful information was lost in this process. The resulting sampling interval is about 2 minutes per observation, which is still much less than the period required for significant changes in road condition.

Pattern Recognition and Neural Network Applications

As described above, it was not possible to use the direct signal as a reference due to overlap of the direct and reflected beam paths. Consequently, statistical techniques to estimate accumulation levels were unlikely to be effective since the large data variations illustrated in Fig. 9 could not be removed. However, the task of identifying the material on the road is much less demanding and can be addressed using a variety of pattern recognition or neural network techniques. For this approach, all eight data measurements are used as inputs. Assuming that the statistics of the data are known completely, a minimum probability of error classifier can be implemented by choosing class the C_k maximizing the probability $P(C_j|\mathbf{x})$ given by:

$$p(C_j \mid \mathbf{x}) = P(C_j)\, p(\mathbf{x} \mid C_j), \quad j = 1, \ldots, N_C$$

where N_C is the total number of road condition classes, $P(C_j \mid \mathbf{x})$ is the posteriori probability of class C_j given data $\mathbf{x}$ (i.e., the eight measured microwave values), $P(C_j)$ is the a-priori probability of the j-th class (for example, the historical likelihood of snow on any given day) and $p(\mathbf{x} \mid C_j)$ is the 8-dimensional probability density function for data vector $\mathbf{x}$ given that they come from the j-th class. In this investigation, we make no assumption regarding the prior probability $P(C_j)$ which in reality would vary from location to location and would also be a function of time of year. In effect, we assume all conditions are equally likely with $P(C_j) = 1/N_C$ for all classes. Of course, using more accurate values for $P(C_j)$ would improve classifier performance. The resulting classifier is called a maximum likelihood classifier.

Implementing the classifier requires knowledge of the density function $p(\mathbf{x} \mid C_j)$. For many applications $\mathbf{x}$ is assumed to be a Gaussian random variable, but for our case this assumption does not appear to be valid. Figure 10 shows a scatter diagram plotting the direct vs reflected amplitudes for the 2 GHz in-phase component. Fairly good separation is seen among the four classes, which indicates that a classifier may be able to achieve reasonable performance. However, the data clusters are not even approximately ellipsoidal as would be the case for Gaussian random variables.

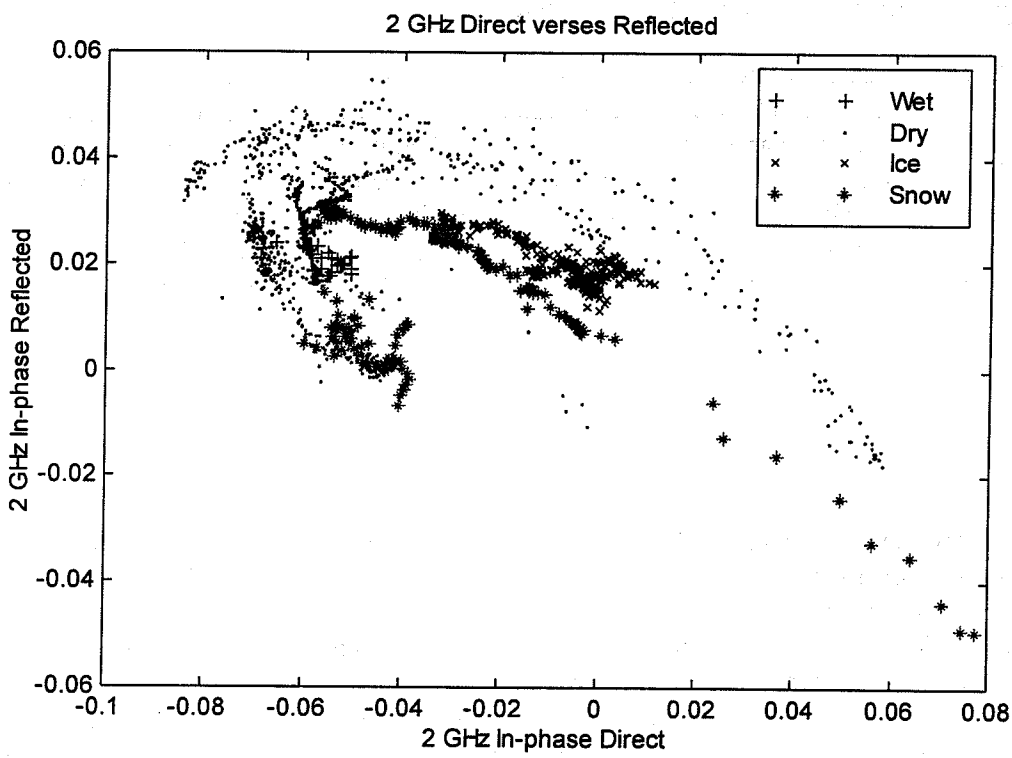

FIGURE 10 Scatter diagram for 2 GHz in-phase data plotting direct vs. reflected measurements. Each data mark indicates one averaged measurement of the microwave signal. The "Ice" condition includes ice and ice with light snow. "Wet" includes water, slush, and snow plus slush.

Since the data exhibit no obvious similarity to any well-know distribution, a non-parametric estimate of the density function should be used. One such approach is to use the "K-nearest neighbor" (k-NN) density estimate given by:

$$p(\mathbf{X}) \approx \frac{K-1}{NV(r)},$$

where K is the number of nearest neighbors (typically in the range 5-20), N is the number of training data values, and V is the volume of a hypersphere with center **x** and radius $r=|\mathbf{x}-\mathbf{x}_k|$ *(11)*. The method is based on having a data set containing N measurements whose classifications are known, i.e., a training data set. To evaluate the density function for a given value **x**, a search is made through the training data to identify the K data vectors closest to **x**. The radius r to the k-th distant vector is used to find volume V(r) using the formula

$$V(r) = \frac{2r^m \pi^{m/2}}{m\Gamma(m/2)},$$

where m=8 is the number of dimensions and $\Gamma(m/2)$ is the gamma function. Constants depending only on m can be ignored since only relative magnitudes of the density function are important to the classification. Thus

we can use $V(r) = r^m$ to simplify the estimate. The k-NN technique tends to reflect local clustering conditions about each location **x**, and will reasonably represent the underlying density function.

This approach was applied to data collected from April 3 to April 10 which is the block containing the largest mix of road conditions. An adjustment to the antennas was made on April 10 so that subsequent data could not be used with this set. As discussed above, road conditions after April 10 contained few interesting weather events and are not included in this study, even though improvements in equipment probably improved the data quality for this set. Also, due to the relatively small size of the data set, it was not feasible to hold back a portion of the data to use for testing as is usually done. This means that the same data used for training the algorithm is also used to evaluate performance, so that results will be more optimistic than can be expected in actual application.

Two tests were made using K=5 and K=10. Larger values of k make the classifier less sensitive to local changes in density, while smaller values make it more susceptible to noise. The five classes used are: (1) dry, (2) wet or dry with wet patches, (3) wet snow, wet ice, or slush, (4) ice, and (5) snow or snow plus ice. (Note that these classes are slightly different than those shown in Fig. 10). It should be noted that assigning labels to various road conditions was very subjective since in many cases several conditions were present at the same time such as patches of water, ice, slush, and snow. This problem contributes to the probability of error since the classifier produces crisp results. One way to address this is to use the resulting density values to indicate degrees of ice, snow, or water. It should also be mentioned that not enough data was collected for class 4 (ice only) to be included in the test as denoted by "NA" in the tables.

Tables 1 and 2 show classification results for K=5 and K=10 respectively. The j-th row and k-th column of each table indicates the fraction of measurements known to be in class j that is assigned to class k. The final column of the table provides the total number of measurements that were classified. Shaded values indicate the fraction of correct classification; for example, in Table 1 the classifier produced 95%, 92%, and 96% correct classifications for the dry, wet-patch, and snow categories, but only 49% for the slush category. It is surprising that slush was confused with dry conditions about 46% of the time. No satisfactory explanation of this has been suggested, although later modifications to the system and improvements to the antenna configuration may help solve the problem. However, it also must be kept in mind that the test and training data were the same, and a more reliable estimate of performance could be 10% or more below those shown if the system were to be operated under real conditions.

TABLE 1 Classification Results Using K=5 Nearest Neighbor Density Estimate.

Road Condition	Dry	Wet Patches	Slush	Ice	Snow	Number of Measurements
Dry	0.954	0.006	0.008	NA	0.032	1532
Wet Patches	0.026	0.917	0.005	NA	0.052	193
Slush	0.459	0.054	0.486	NA	0.0	37
Ice	NA	NA	NA	NA	NA	0
Snow	0.042	0.001	0.001	NA	0.956	834

TABLE 2 Classification Results Using K=10 Nearest Neighbor Density Estimate.

Road Condition	Dry	Wet Patches	Slush	Ice	Snow	Number of Measurements
Dry	0.939	0.014	0.026	NA	0.044	1532
Wet Patches	0.031	0.881	0.0	NA	0.088	193
Slush	0.495	0.243	0.162	NA	0.0	37
Ice	NA	NA	NA	NA	NA	0
Snow	0.055	0.001	0.005	NA	0.939	834

Table 2 shows the results for the K=10 estimate. For this larger value of K, the density estimate is smoother and less sensitive to small changes in the training data. In other words, the results in Table 1 are fairly optimistic in the sense that the measured performance levels could be reached only if actual conditions were very similar to those used to create the training data. Since the K=10 estimate is smoother, we would expect less performance loss if actual conditions varied from the training conditions.

Technical Issues

Numerous technical problems arose during the research project that were resolved satisfactorily. However, several other issues remain to be solved. First, due to delays in manufacturing antenna components, only about a month and a half of data was available for debugging the system and collecting data for analysis during the spring of 1997. More data has been collected during fall 97 using the modified antenna system on the roof of the Physical Science Building, but data quality is poor due to interference from nearby transmitters. Clearly, a longer test phase is desirable to fully debug the system and characterize its performance.

A second problem that has not been fully understood or resolved is the presence of unexplained variations in the data. The best explanation is that the breadboard transceiver circuit is susceptible to interference both internal and external to the system. The "connectorized" circuit construction method used to build the prototype circuit is prone to such problems -- especially at such high frequencies. It is recommended that any follow-on research be conducted using a new version of the system constructed with professional printed circuit techniques. The new system would also use smaller commercial grade antennas to reduce wind loading and ease portability.

Results vs. Goals

Primary goals were to develop a system to detect the type of surface road cover (rain, snow, etc), estimate the amount of accumulation, and to be robust against environmental effects unrelated to moisture on the road surface. Due to mixing of the direct and reflected beam paths, the second two goals were not met. The innovation of using a direct beam reference signal is critical to removing environmental effects and providing a stable and reliable signature. With the redesign of the antenna and reflector geometry, however, we feel that these goals are now possible. Despite the problems with mixing, the first goal was still largely accomplished. Bayes pattern recognition techniques were able to accurately identify snow and water on the

road, with poorer performance for slush. Even better performance can be expected in the future, now that it appears that the mixing problem has been resolved.

PLANS FOR IMPLEMENTATION

No steps have yet been taken to develop the product based on the research results, pending resolution of problems discussed above. It is felt that an operational test covering one full winter season and using a commercial-quality transceiver is desirable before proceeding with product development.

CONCLUSIONS

This project investigated a new microwave system to detect and quantify classes of surface moisture accumulation on remote highways. The system incorporates dual frequencies and a direct path reference signal to alleviate calibration requirements and weather sensitivity exhibited by previous systems. The ultimate product will be relatively inexpensive compared to current embedded surface sensor technologies, making it cost effective to install at remote locations to provide real-time road condition information. Furthermore, the small size and minimal power requirements result in a readily portable device that could be re-deployed in response to changing weather or traffic needs.

Project goals were not 100% met, but did demonstrate the system's ability to discriminate different road covers with low probability of error. Some system problems such as mixing of the direct and reflected signal components were resolved but were not fully field tested due to delays in setting up the outdoor test site. Other problems such as unwanted signal variations have not been solved, but are thought to be related to the breadboard circuit implementation and can be addressed by moving to a professionally designed and built transceiver using printed circuit board techniques.

The next step toward implementing the system is to partner with a commercial microwave system manufacturer to co-develop a second generation prototype for use in a full operational test. The new system would be miniaturized and weatherproofed, and equipped with either radio communication or data logging capabilities. The Wyoming Department of Transportation has expressed interest in collaborating in a field test to fully evaluate the new system. Such a test would involve installing the systems at a small number of sites representing a variety of highway locations and weather conditions. The tests would be conducted over one full winter season, from early fall through late spring.

REFERENCES

1. Boselly, S.E. Road weather information systems: What are they and what can they do for you? *Int. Symp. on Snow Removal and Ice Control Technology*, vol. 2, preprint 42, 1992.

2. Magerl, G. and W. Pritzl. Microwave remote sensing of road surface during winter time. *Int. Microwave Conference*, vol. 3, pp. 173-181, Ksiaz, Poland, 1994.

3. Magerl, G., W. Pritzl, and P. Frohling. A road condition sensing microwave radar. *Int. Symp. on Recent Advances in Microwave Technology (ISRAMT'91)*, pp. 376-381, 1991.

4. Frohling, P., G. Magerl, and W. Pritzl. Detection of weather induced road conditions. *Int. Symp. on Snow Removal and Ice Control Technology,* vol. 2, preprint 34, 1992.

5. Hertl, S., G. Schaffar, and H. Stori. Contactless determination of the properties of water films on road. *J. Phys. E: Sci. Instrum.,* vol 21, pp. 955-958, Oct. 1988.

6. Berinsky, S., H.K. Hong, T.H. Lee, and W.T. Schrader. The development of a microwave radiometer for use as a highway ice detector. *Lockheed Technical Report*, 1978.

7. Tapkan, B. I., S. Yoakum-Stover, and R. Kubichek, Active microwave remote sensing of weather related road surface conditions. Conference Proceedings 16, Fourth Int'l Symposium on Snow Removal and Ice Control Technology, pp. 73-80, 1996.

8. Ulaby, F. T. *Microwave remote sensing: Active and passive.* Artech House, 1981

9. Matzler, C. Application of the interaction of microwaves with the natural snow cover. *Remote Sensing Reviews*, vol. 2, issue 2, Harwood Academic Publishers, 1987.

10. Balanis, C. *Advanced engineering electromagnetics.* Wiley Publishing, 1989.

11. Kong, J.A., L.A. Tsang, and R.T. Shin. *Theory of microwave remote sensing.* Wiley Interscience, 1985.

12. Fukunaga, K., *Introduction to Statistical Pattern Recognition*, Academic Press, 1990.