IDEA

Innovations Deserving
Exploratory Analysis Programs

Highway IDEA Program

Development of a Second Generation Detection-Control System for Safer Operation of High-Speed Signalized Intersections

Final Report for Highway IDEA Project 115

Prepared by:
Karl Zimmerman, Texas Transportation Institute/Texas A&M University, College Station, TX

January 2007

TRANSPORTATION RESEARCH BOARD
OF THE NATIONAL ACADEMIES

INNOVATIONS DESERVING EXPLORATORY ANALYSIS (IDEA) PROGRAMS
MANAGED BY THE TRANSPORTATION RESEARCH BOARD (TRB)

This NCHRP-IDEA investigation was completed as part of the National Cooperative Highway Research Program (NCHRP). The NCHRP-IDEA program is one of the four IDEA programs managed by the Transportation Research Board (TRB) to foster innovations in highway and intermodal surface transportation systems. The other three IDEA program areas are Transit-IDEA, which focuses on products and results for transit practice, in support of the Transit Cooperative Research Program (TCRP), Safety-IDEA, which focuses on motor carrier safety practice, in support of the Federal Motor Carrier Safety Administration and Federal Railroad Administration, and High Speed Rail-IDEA (HSR), which focuses on products and results for high speed rail practice, in support of the Federal Railroad Administration. The four IDEA program areas are integrated to promote the development and testing of nontraditional and innovative concepts, methods, and technologies for surface transportation systems.

For information on the IDEA Program contact IDEA Program, Transportation Research Board, 500 5th Street, N.W., Washington, D.C. 20001 (phone: 202/334-1461, fax: 202/334-3471, http://www.nationalacademies.org/trb/idea)

FINAL REPORT

to the

NATIONAL COOPERATIVE HIGHWAY RESEARCH PROGRAM (NCHRP)

on IDEA Project 115

Development of a Second Generation Detection-Control System for Safer Operation of High-Speed Signalized Intersections

LIMITED USE DOCUMENT

Texas Transportation Institute
Texas A&M University System

DISCLAIMER

NOTICE

TABLE OF CONTENTS

ACKNOWLEDGMENTS

This research project was sponsored by the NCHRP IDEA Program. The research was conducted by Dr. Karl Zimmerman with the Signal Operations Program of the Texas Transportation Institute.

The researcher would like to acknowledge the support and guidance provided by the IDEA Program coordinator, Dr. Inam Jawed. In addition, the researchers would like to acknowledge the assistance provided by Mr. Michael Pratt, Mr. Marshall Cheek, and Mr. Ivan Lorenz during Phase 1 of this project, and Mr. Larry Colclasure and Mr. James Keck of the Texas Department of Transportation during the field implementation of the project.

LIST OF FIGURES

Figure **Page**

LIST OF TABLES

Table **Page**

CHAPTER 1. INTRODUCTION

OVERVIEW

This report details the research methods and findings for NCHRP IDEA Project 115: *Development of a Second-Generation Detection-Control System for Safer Operation of High-Speed Signalized Intersections*. This report consists of three parts. In the first part, the underlying problem of high-speed signalized intersections is described, along with the original Detection-Control System design and function. The second part describes the development of enhancements to the Detection-Control System's control algorithm that improve the system's safety and operations. The third part describes the field deployment and testing completed in Phase 2 of the project.

HIGH-SPEED INTERSECTIONS AND THE DETECTION-CONTROL SYSTEM

The original Detection-Control System was designed specifically to prevent a particular problem that occurs at high-speed signalized intersections. This sections describes the problem, the original Detection-Control System design, components, and operation, and the results of a field trial at several intersections in Texas.

Driver Behavior on Signalized High-Speed Approaches

Drivers approaching a traffic signal at high speed must decide whether to proceed or stop when presented with a yellow indication. This decision is based on each driver's perception of whether it is safe (or possible) to stop prior to entering the intersection. This decision is illustrated in Figure 1-1.

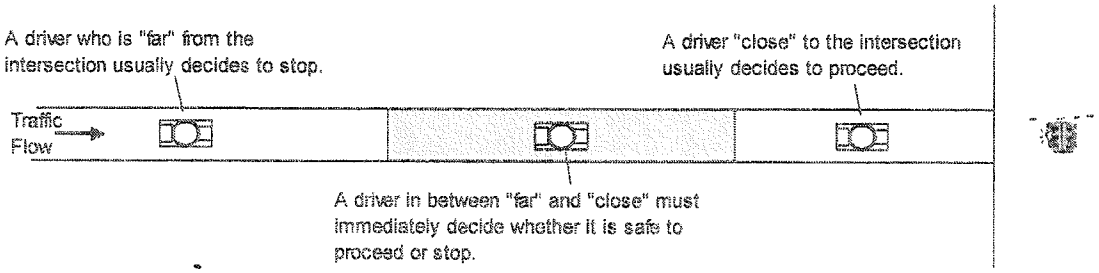

FIGURE 1-1. Driver decisions approaching an intersection.

A driver in the shaded area in Figure 1-1 is said to be in the "dilemma zone," where there is a range of driver reactions to the yellow indication. Some drivers will elect to stop, while others will decide to proceed. This creates a distribution of driver stopping probabilities. Figure 1-2 illustrates the tendencies for a single driver and for all of the drivers on an approach. Any given driver will be

decisive about whether to stop or proceed, as is indicated in Figure 1-2a. However, the aggregate decisions made by all drivers creates a distribution of stopping decisions, and this is conceptually shown in Figure 1-2b.

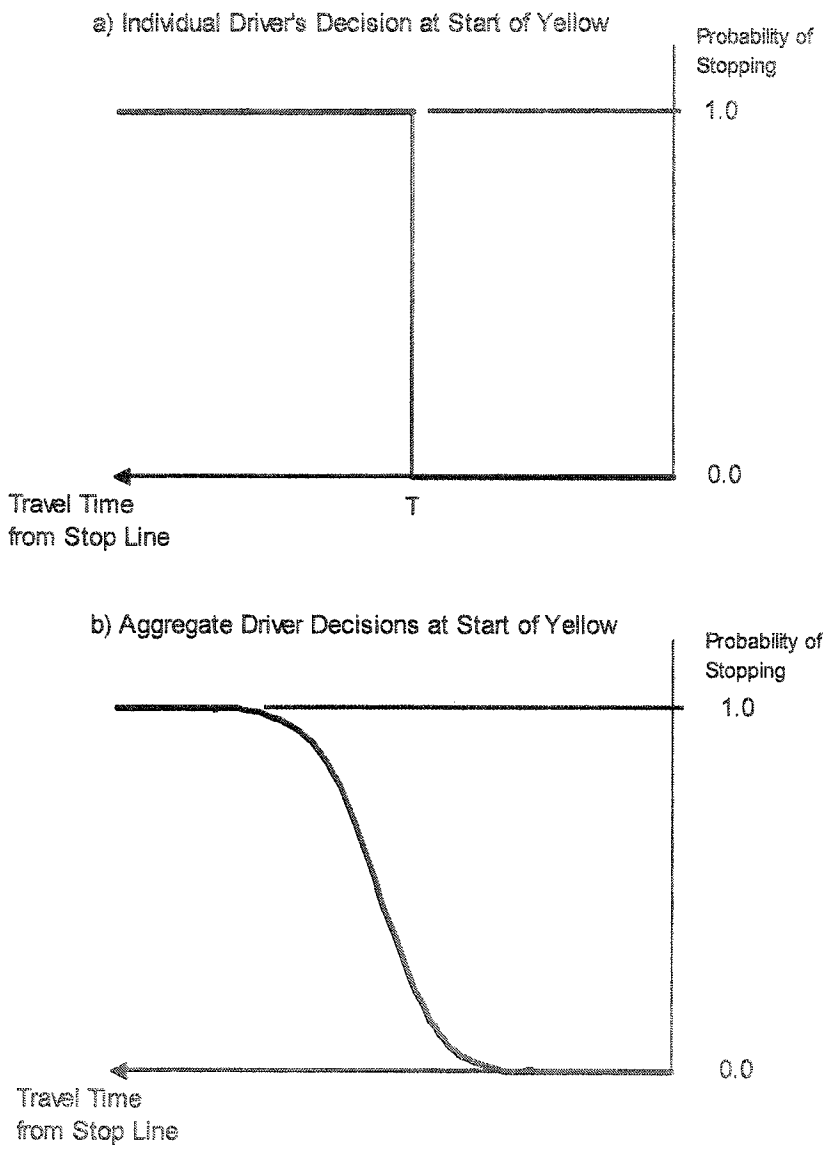

FIGURE 1-2. Driver reactions approaching an intersection.

If there is only one vehicle on a high-speed approach, then there are no conflicts. However, there can be a problem if two vehicles are in the same lane. In this case, if the driver nearest to the intersection decides to stop while the driver farther from the intersection decides to proceed, a rear-end collision can result. Rear-end collisions are one of the two principal crash types that have been identified at high-speed intersections (*1*). The likelihood of a rear-end collision occurring increases when both vehicles are in the "dilemma zone."

The other major safety problem at high-speed intersections involves right-angle collisions, which can be very severe. These crashes can occur when a driver decides to proceed, but does not realize that the yellow time is insufficient to reach the intersection before the start of red. This driver becomes a red-light violator and could potentially cause a serious crash. Trucks are less able to stop than passenger vehicles, and their drivers may be less inclined to stop for other reasons, so trucks may play a significant role in crashes at high-speed intersections. Again, the likelihood of this type of crash increases when a driver is in the "dilemma zone." Obviously, if the signal phase could be maintained in green while vehicles are in the dilemma zone, then safer operation should result.

Parsonson (*2*) refined the "dilemma zone" as being a zone on a high speed approach between where 90 percent of drivers decide to stop and where 10 percent of drivers decide to stop when presented with a yellow indication. This definition was further interpreted to mean the outside edge of the dilemma zone was approximately 5 s from the intersection, and the inside edge of the dilemma zone was approximately 2 s form the intersection. The 5 s to 2 s range has been widely cited in the literature. Other researchers have found that stopping decisions, and therefore the dilemma zone, actually vary with approach speed (*3*, *4*, *5*). Bonneson suggested that 5.5 s to 2.5 s was a worthwhile compromise due to the changes in behavior with speed (*1*). Once the dilemma zone has been established, detection can be placed in the zone to determine when a vehicle is present in the dilemma zone and make sure the phase remains green.

However, this definition creates a problem, namely, that it is based on time, not distance. A vehicle 5.5 s from the intersection can be at very different distances depending on its speed. Figure 1-3 illustrates the difference between the dilemma zone sizes for vehicles traveling 45 mph and 70 mph. If a 70 mph vehicle is located at A and a 45 mph vehicle is located at B, then the phase should be allowed to end, because neither vehicle is in the dilemma zone. Current detection schemes essentially do not allow for this to occur. Figure 1-4 shows the same two vehicles with a multiple loop detector system, which is a typical dilemma zone protection technique for high-speed approaches. The detectors are placed so that a vehicle traveling within a certain range of speeds receives dilemma zone protection. The potential shortcomings of this type of detection system are readily apparent. The 70 mph vehicle arrives in the dilemma zone before it reaches the first detector, so the signal controller does not know a vehicle is even present. The 45 mph vehicle does not reach the dilemma zone until it reaches the third detector, extending the green when it did not need dilemma zone protection. The design also requires a large gap in traffic to allow the phase to end. If this gap is not found, the phase extends until it reaches its maximum allowable time ("max out").

At max out, dilemma zone protection ceases, and the phase ends immediately, which causes the situation that the dilemma zone protection was trying to prevent.

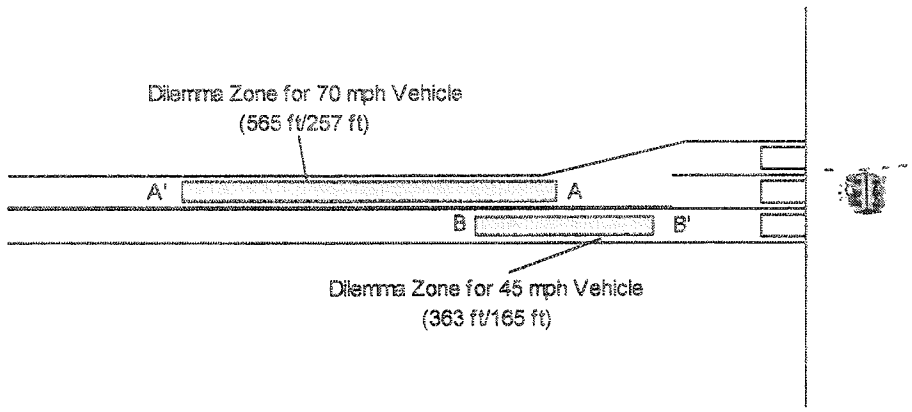

FIGURE 1-3. Dilemma zones for different vehicle speeds.

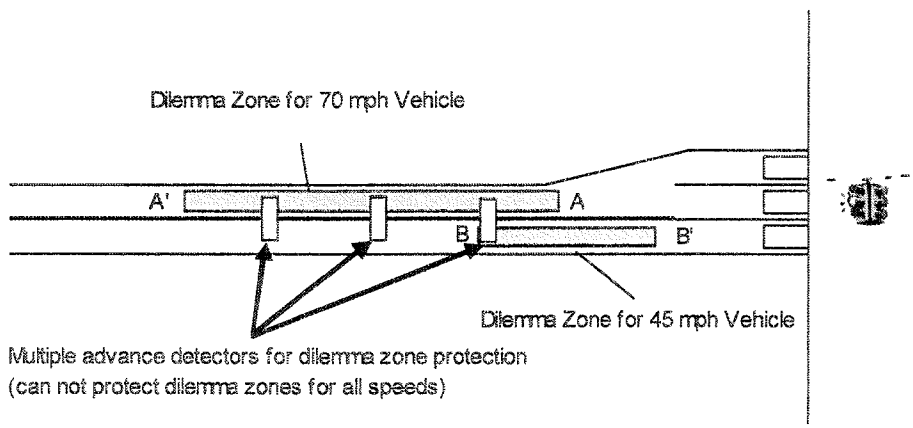

FIGURE 1-4. Multiple loop dilemma zone protection compared to dilemma zones.

The problems presented by the detection design shown in Figure 1-4 have been historically resistant to solutions. Adding more detectors to protect a larger speed range results in larger gaps being required, which increases the likelihood of max out as volumes increase, for example. Additionally, if the speeds change substantially on the approach, either by changes in driver behavior over time or new speed limits, the detection may be in the wrong place for the new speeds. Relocating the detection is expensive, and stop-gap solutions such as adjusting the detector extension times do not necessarily improve the situation.

A more flexible solution would be to tailor the dilemma zone to each vehicle's speed. This requires each vehicle's speed to be measured before it gets to the intersection, and then that vehicle's time in the dilemma zone must be estimated, and the phase held green during this time. Figure 1-5

shows how this technique would work compared to Figure 1-4. Some allowance would have to be made for changes in vehicle speeds or measurement errors, so the "protection zone" would have to be larger than the actual dilemma zone. However, the concept's value is apparent: each vehicle receives the protection it needs on the approach, and no more, preventing the wasted time in the multiple advance detector system. Also, because each vehicle's speed is measured directly, the system would work even if the approach speed changes dramatically, for whatever reason.

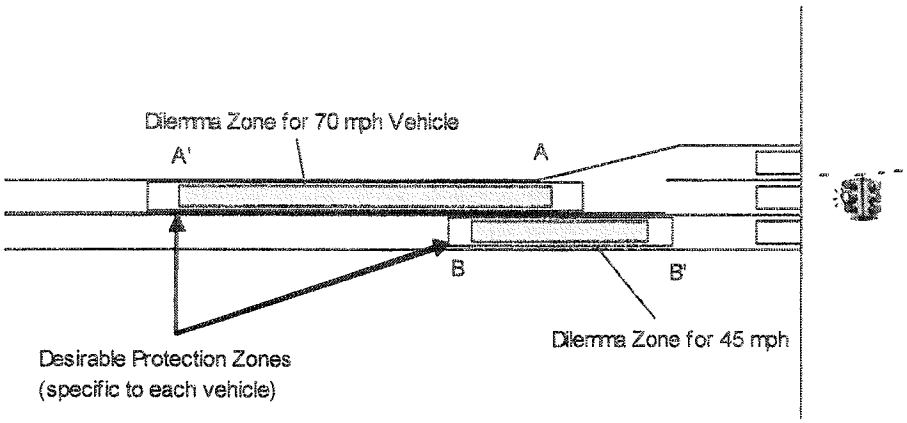

FIGURE 1-5. A more desirable, vehicle-based dilemma zone protection solution.

Detection-Control System

Figure 1-5 illustrates the basic concept behind Texas Transportation Institute's Detection-Control System, or D-CS: each vehicle's speed is measured upstream of the intersection, that vehicle's travel time to the intersection is estimated, and then the time that vehicle is in the dilemma zone is estimated. (*1*) The phase is then held green while vehicles are in the dilemma zone.

Figure 1-6 presents the detection design for D-CS. The detection consists of a pair of detector loops in each through travel lane located between 800 and 1000 feet from the stop line on each high-speed approach. This design allows for a travel time of approximately 10 s for vehicles traveling 70 mph, and 15 s for vehicles traveling 45 mph.

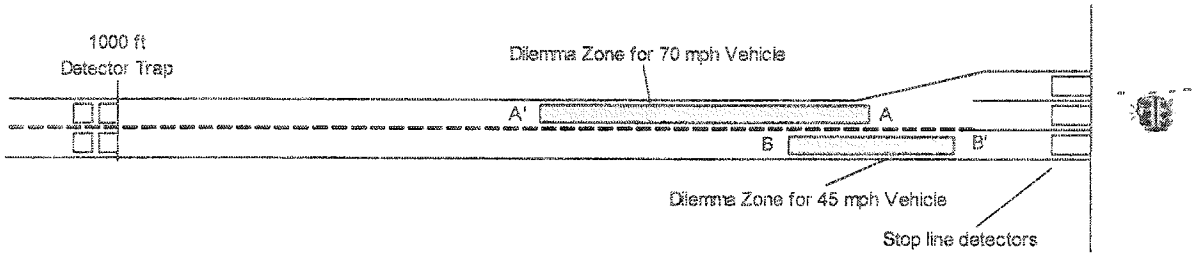

FIGURE 1-6. Detection-Control System detection design.

The trap configuration of the detectors allows for convenient measurement of vehicle speed. The detector "on" and "off" pulses are used to determine the speed of each vehicle that crosses the trap in each lane. The trap typically has a 20 ft spacing between detectors, so it is unlikely that two vehicles will occupy the same trap at the same time. In addition, the detector occupancy (i.e., its "on" time) can be used with the speed measurement to determine each vehicle's length. As stated earlier, trucks may be a significant safety problem at high-speed intersections, so the ability to separate passenger vehicles from trucks could allow for special treatment of each class of vehicle.

Currently, D-CS consists of its detection design, shown in Figure 1-6, and its in-cabinet components. Figure 1-7 illustrates the information flows through D-CS and its equipment. The detector activity is sent to a personal computer in the cabinet running the D-CS control algorithm and used to measure the speed, length, and arrival time of each vehicle. Any vehicle with a length over 25 ft is assumed to be a "truck." The travel time to the stop line is then estimated based on the arrival time and vehicle speed, and the time when each vehicle is in the dilemma zone is predicted. The computer maintains all of the estimates of dilemma zone arrivals, and it decides when to end a green phase. The computer communicates with the signal controller using the phase hold and ring force-off inputs only. When the D-CS controlled phase turns green, a phase hold signal is sent from the computer to the controller, maintaining that phase green regardless of other conditions. D-CS evaluates the dilemma zone conditions on each approach every 0.5 s throughout the green phase. When D-CS determines that it is time to end the phase, the computer drops the phase hold and issues a ring force-off to ensure that the phase ends immediately.

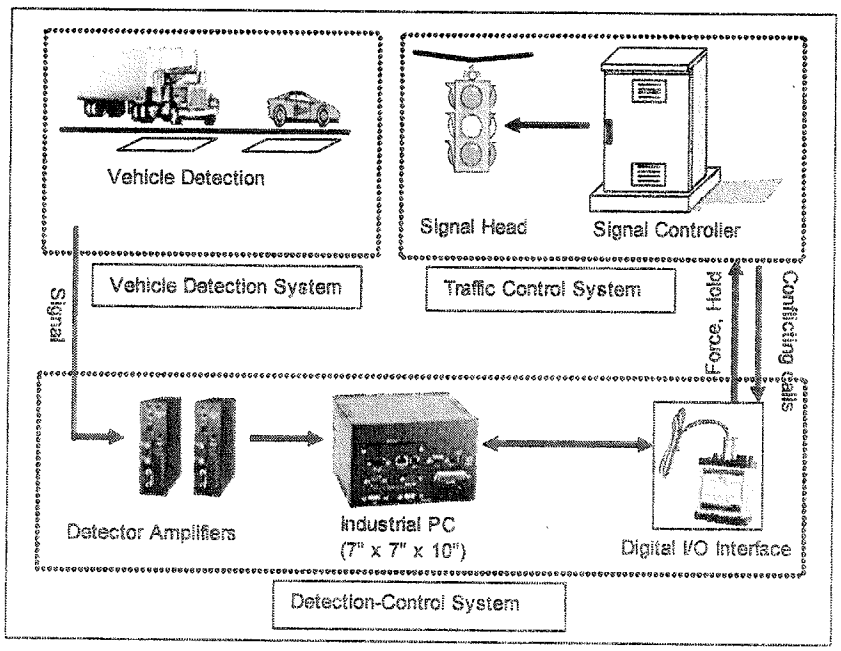

FIGURE 1-7. D-CS components and information flows

While the previous paragraph describes the basic operation of D-CS, it does not include some subtleties that were included to enhance its operations. One of the critical components is the size of the protection zone. D-CS uses Bonneson's dilemma zone values (5.5 s to 2.5 s), with an additional 0.5 s added to each end in recognition of vehicle speed changes and the potential for speed measurement errors, so the D-CS protection zone is 6.0 s to 2.0 s for each vehicle. While it ensures that drivers receive adequate dilemma zone protection, the effective gap between two vehicles traveling the same speed is 4 s, which is fairly large. The large gap will tend to cause max out, which creates dilemma zone problems. To avoid max out, the allowable dilemma zone conditions are changed after about 70 percent of the maximum green time has elapsed, so that up to a single passenger car per lane may be in the protection zone at the start of yellow. Having a single vehicle in the protection zone in each lane effectively prevents rear-end collisions. Also, trucks are not allowed to be in the protection zone at all, which reduces truck stopping, red-light violations, and collisions. This changed protection zone rule is called Stage 2 operation.

Stage 2 operation may cause many vehicles to be in the protection zone at the start of yellow. To try to minimize this number, D-CS uses it's upstream detection location to its advantage. Between the time when a vehicle leaves the detector trap and when it arrives in the protection zone, several seconds elapse. This time can be used to "look ahead" into the future, so D-CS can see a few additional seconds into the future and can determine if there will be a time when there will be fewer vehicles in the dilemma zone. If so, D-CS will delay the end of the phase until that time. If not, D-CS will end the phase immediately.

The phase end decisions made by D-CS are important to understanding how the system works, and so they are summarized again here for clarity. During the first part of the phase (Stage 1 operation), D-CS will allow the phase to end if and only if all of the protection zones in all of the lanes have no vehicles in them. After 70 percent of the maximum green time has elapsed (Stage 2), D-CS will allow the phase to end if:

- There is either none or one passenger car in the protection zone per lane, and
- There are no trucks in the protection zone in any lane, and
- There is not a time in the next few seconds when there will be fewer vehicles in the protection zone.

When all of the maximum green time has elapsed, D-CS will end the phase as soon as possible, just like a traffic signal controller would. This situation is hopefully avoided by the use of Stage 2, but there may still be situations where the D-CS phase must be terminated to serve other traffic.

Field Implementation and Results

D-CS has been implemented at eight intersections in Texas and three in Ontario, Canada. Seven of these intersections in Texas are currently in operation (one was removed due to construction). The three intersections in Ontario are in operation, and the Ministry of Transportation intends to install more in the near future. Also, the original D-CS algorithm has been incorporated into a traffic signal controller by Naztec, Inc., and at least one field trial will begin within the next year.

A multi-year field assessment of D-CS operation in Texas was also undertaken to determine the effectiveness of the installations (*6*). The results of this assessment indicated that:

- D-CS effectively maintained the existing operation of the intersection
- Red-light violations were decreased by an average of 58 percent for all vehicles
- Red-light violations by trucks (i.e., vehicles longer than 25 ft) decreased by an average of 80 percent.
- Overall intersection collisions were reduced by about 39 percent.

All of the violation and collision reductions were statistically significant at a 95 percent confidence level. The conclusion from the field assessment was that D-CS was a safe and effective means of controlling an isolated, high-speed intersection.

POSSIBLE EXTENSIONS TO D-CS

D-CS was originally envisioned to be used only at isolated (i.e., non-coordinated) signalized intersections with high-speed approaches and a major-minor configuration (i.e., the side street drivers would have as expectation of stopping). However, the control algorithm was designed to allow for potential future modifications. Also, the features of D-CS provide some potential enhancements with relatively little additional effort.

For example, the ability to distinguish between vehicle types based on vehicle length could be exploited for more purposes than just the Stage 2 operation cited earlier. Theoretically, if the driver stopping characteristics for each vehicle type were known, then a separate protection zone could be provided for each type of vehicle, further enhancing safety and improving efficiency.

There is no theoretical reason why D-CS detection can not be used on all intersection approaches (i.e., a major-major configuration). The D-CS control algorithm was designed so it could theoretically control four phases, although its current form only controls two. The only limits would be the cost of detector installation, the need for more serial inputs to the computer for more detection, and the processing capabilities of the computer itself.

Many cities have high-speed signalized intersections that have some form of coordination even though these signals may be a considerable distance apart. D-CS can not operate at these

locations at this time. However, a series of research about red-light violations have indicated that poor coordination and "illogical" phase ends (from the driver's point of view) contribute to red-light violations and collisions (*7*, *8*). Using D-CS to safely end green phases between platoons within the structure of existing coordination systems may be beneficial to safety.

Stage 2 operation, as currently defined, may or may not be the safest approach to preventing max out. Instead, it may be preferable to reduce the size of the protection zone. This concept would obviously require additional investigation before it would be attempted.

The presence of a computing device external to the controller provides possibilities for finding real-time measures of signal performance that would otherwise not be available. For example, the phase duration of D-CS controller phases and the cycle length could be stored. Also, D-CS is measuring the speed and length of every arriving vehicle on the high-speed approaches, so an accurate volume count and average speed measurement is possible for each lane of each approach. This is much more detailed information than is commonly available.

CHAPTER 2. ENHANCEMENTS TO THE D-CS CONTROL ALGORITHM

Five potential enhancements to D-CS, as described in the previous section, are:

- Dilemma zone protection based on vehicle size,
- System extension to include major-major intersections and interchanges,
- Intelligent, real-time dilemma zone protection changes to improve operations,
- Distributed coordination capabilities, and
- Real-time reporting of measures of effectiveness.

These enhancements have been investigated. Two were found to be impractical within the scope of this project. The other three were possible with reasonable effort and were incorporated into the D-CS control algorithm. The following sections describe the efforts for each of the five enhancements, either in their implementation or the reason for their deferral until a later research effort.

SIMULATION TESTING

All of the investigations described in the following sections were performed in Texas Transportation Institute's Cabinet-in-the-Loop environment, with a traffic simulation operating with an actual signal controller cabinet containing the D-CS equipment and computer. The simulation's detector inputs to the controller cabinet replace the actual detector calls at a real-world intersection. The cabinet's red, yellow, and green phase outputs are fed into the simulation software, which affects the arriving traffic stream. In this way, randomized traffic flows can be created to test actual field hardware and software without requiring an actual intersection, allowing debugging to occur without hazard to the general public.

DILEMMA ZONE PROTECTION BASED ON VEHICLE SIZE

Trucks and passenger cars have considerably different braking capabilities, especially as speeds increase. Because trucks typically take much more distance (and time) to stop than a passenger car, and also more time to accelerate back to their original travel speeds, truck drivers may be understandably reluctant to stop their vehicles. This reluctance can lead to red-light violations, right-angle collisions with cross traffic as a result of a red-light violation, and rear-end collisions with passenger cars whose drivers can (and do) safely stop in a distance that a truck can not.

Unfortunately, there was no available literature about truck driver behavior at the start of yellow. Apparently, a study of trucks alone has not been performed. Therefore, another estimator of truck stopping was necessary. There were two estimators available as part of D-CS and the simulation environment: number of trucks in the protection/dilemma zone at the start of yellow, and the number of trucks stopping during the simulation. However, the number of trucks stopping includes trucks that stop for reasons other than the start of yellow, so it was not chosen. Instead, the

number of trucks in the dilemma zone was used to assess different protection zones for trucks and passenger cars.

Intuitively, if trucks take more time to stop, then any changes to the protection zone should include an increase in the upstream end of the protection zone (i.e., away from the intersection). If a 3 s dilemma zone is maintained, then the downstream end should also shift. However, if the truck protection zone's downstream end is moved farther from the intersection, there is a chance of conflicts with passenger cars traveling the same speed. Therefore, only the upstream end of the protection zone was modified for trucks.

Because only the upstream end of the protection zone was altered for trucks, there would likely be some detrimental effect on intersection operations as a whole due to the extra time used to protect trucks. Overall intersection control delay would become an important component to the assessment of effectiveness of this enhancement. Also, the increased time would increase the likelihood of max out, so the cost of increasing the phase time would have to be weighed against an increased number of vehicles caught in the dilemma zone due to max out.

Identical simulations were made of a series of different volume levels, truck percentages, and approach speeds within the simulator for each of several protection zone sizes for trucks. These zone sizes are shown in Table 2-1. For each case, the D-CS control algorithm was modified so that it would provide the normal 6 s to 2 s protection zone to passenger cars and the zone size shown in Table 2-1 for trucks. Case 2a was run after the initial cases to confirm a trend observed in the initial runs. Case 4 began the protection zone immediately after a truck was identified, extending the phase for the entire time a truck was on the approach between the D-CS detectors and the intersection.

Theoretically, there should be no trucks in the dilemma zone for any of the alternative shown. In practice, there is a time lag between the simulation and controller outputs that can create some dilemma zone vehicles that would not be present in the field. Also, the cabinet-in-the-loop computer makes occasional errors that affect the speed of vehicles as seen by D-CS. D-CS then predicts those vehicles to be in the wrong place. This also affects the number of vehicles in the dilemma zone, especially trucks. A comparison of cabinet-in-the-loop results and field observations for the same conditions indicate that D-CS is operating as intended, even though Table 2-1 may indicate otherwise.

TABLE 2-1 Comparison of Different Truck Protection Zones

Case	Protection Zone		Control Delay (s/veh)	Average Cycle Length (s)	Number of Vehicles in Dilemma Zone		Number of Dilemma Zone Vehicles Due to Max Out	
	Upstream	Downstream			Pass. Cars	Trucks	Pass. Cars	Trucks
1	6 s	2 s	15.2	72.1	47	6	1	0
2	7 s	2 s	15.3	72.0	35	3	9	1
2a	7.5 s	2 s	15.2	73.4	32	2	2	0
3	8 s	2 s	15.3	73.1	44	2	10	1
4	(loops)	2 s	18.9	82.8	76	13	70	13

Case 2 provided slightly better protection for trucks than Case 1 (the existing D-CS design). Case 3 and Case 2 are comparable, with Case 2 being slightly better. Case 4 created many max out situations and was not a good solution. Note that the increased protection zone for trucks also seems to reduce the number of cars in the dilemma zone as well as the number of trucks for Cases 2 and 3, probably because the phase is being held slightly longer and the cars are receiving a "free" benefit.

Because Cases 2 and 3 were similar, Case 2a was created to determine if there was an optimum value between Cases 2 and 3. D-CS operates in 0.5 s intervals, so further fine-tuning of the protection zone would not produce meaningful results. The results of Case 2a were very similar to Case 2 and to Case 3, and indicated that the difference between 7 s and 8 s was probably small. The large difference in the number of dilemma zone vehicles due to max out was difficult to explain. Further simulation runs were performed to attempt to isolate the differences, and these are presented in Table 2-2. Three simulation runs were made for each case at each of five different truck percentages and two different volume levels, for a total of 300 simulations. The results of these additional simulations supported the original findings in Table 2-1.

TABLE 2-2 Summary of Additional Simulations of Alternative Truck Dilemma Zones

Case	Increase in Upstream Dilemma Zone End	Intersection Control Delay (s/veh) [1]	Average Cycle Length (s)	Fraction of Through Vehicles Stopping [2]		Vehicles in Dilemma Zone per 1000 Entering Vehicles	
				All	Trucks	All [3]	Trucks [4]
1	0 s	14.3	67.5	0.44	0.45	4.33	0.79
2	1 s	14.3	68.9	0.43	0.44	4.75	0.71
2a	1.5 s	14.3	68.4	0.43	0.44	4.42	0.42
3	2 s	14.3	69.5	0.42	0.41	3.92	0.58
4	3.1 s	15.8	80.9	0.39	0.36	9.67	2.21

Notes: 1- Control delay is average for all intersection movements.
2- Considers through vehicles on D-CS controlled phases only
3- Includes passenger cars and trucks for D-CS controlled phases
4- Trucks only, per 1000 entering vehicles (passenger cars and trucks)

The number of trucks in the dilemma zone per 1000 vehicles entering the intersection on a D-CS controlled approach is shown graphically in Figure 2-1. There is an obvious minimum in the number of trucks in the dilemma zone when the upstream end of the protection zone is increased by 1.5 s. Field observations of D-CS during the field implementation also indicated that a longer protection zone will also stop fewer trucks. Therefore, the 7.5 s upstream protection zone limit in Case 2a was chosen for use as a system extension for additional truck protection.

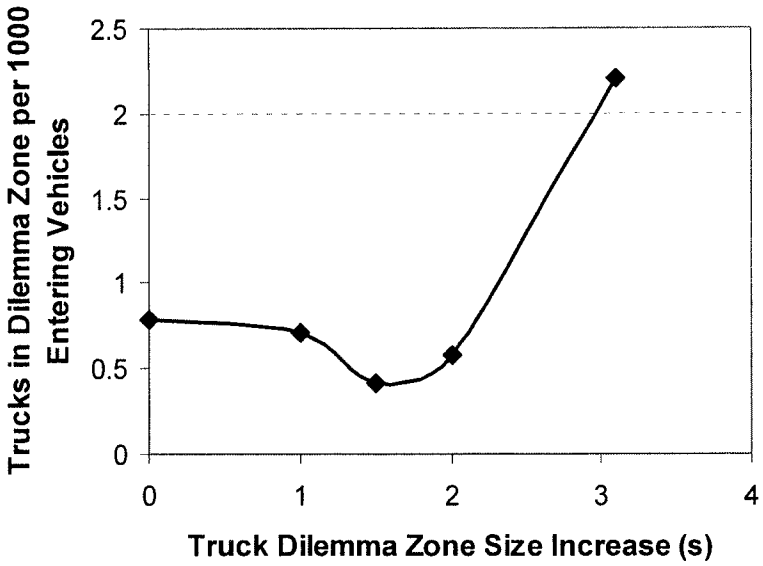

FIGURE 2-1 Number of Trucks in the Dilemma Zone per 1000 Entering Vehicles.

SYSTEM EXTENSION TO INCLUDE MAJOR-MAJOR INTERSECTIONS AND INTERCHANGES

Many isolated, high-speed signalized intersections feature two high-speed arterials intersecting. It can be assumed that the drivers on both roadways would not expect to be stopped, so a traffic signal may be doubly dangerous. This situation is also fairly common on the outskirts of cities. Therefore, using D-CS at a major-major intersection would be useful. In addition, D-CS may have some benefits at service interchanges, where the "minor" roadway is itself a high-speed route. Both possibilities would also increase the number of intersections where D-CS could be employed.

Upon further investigation, however, this enhancement was not found to be practical within the scope and budget of the project. A piece of control software for the cabinet-in-the-loop facility was specifically written for the major-minor configuration. It would need to be rewritten for a major-major intersection. The rewritten software would also tax the capabilities of the machine it is resident on. Due to a software limitation of the simulation itself, another machine could not be readily substituted. In addition, a second detector rack would be required in the cabinet for the additional travel lanes, another special bus interface unit would be needed for the second detector rack, an additional data acquisition card would be required in the cabinet-in-the-loop computer, the D-CS algorithm would need to be modified to accept inputs from five serial ports (as opposed to

four currently), and the D-CS control computer would need to be modified to provide the extra serial port for communications. There was not time or money to complete these tasks.

The use of D-CS at an interchange was complicated by the special phase sequences commonly used at interchanges. D-CS could not function effectively at any four phase diamond interchange due to the phase sequence. Also, D-CS would not effective at any interchange where two separate controllers were used (due to very wide spacing of the ramp terminals), or at three-level diamonds. These factors greatly restrict the use of D-CS at interchanges. Also, the cabinet-in-the-loop facility would require other extensive modifications, making this part of the enhancement infeasible as well.

Therefore, it was decided to postpone modifications to D-CS for use at a major-major intersection or interchange until a later time.

INTELLIGENT, REAL-TIME DILEMMA ZONE PROTECTION CHANGES TO IMPROVE OPERATIONS

D-CS has historically used a two-stage process to avoid max out. This process involved changing the rules for dilemma zone protection partway through the green phase. For the first 70 percent of the green time, the protection zones in all lanes, on both approaches, were required to be empty. For the remaining 30 percent of the phase, the protection zones could have at most one passenger car per lane and the phase could still end. D-CS would then look a few seconds into the future to determine if a future time will have smaller total number of vehicles in the protection zone, and if so, to wait for that time before ending the phase. Otherwise, D-CS would end the phase immediately.

In spite of its obvious success in the field (*6*), this technique does have three drawbacks. First, the drivers caught in the protection zone are presented with a reasonably clear-cut alternative and will still have to decide to proceed or stop. Second, the protection zone extends outward to 6.0 s, while most yellow times are shorter than 6.0 s. If a driver 5.9 s away from the intersection decides to proceed (for whatever reason), there would not be enough yellow time to allow him or her to safely reach the intersection before the yellow ended. That driver would likely become a red-light violator; even a "panic stop" would probably not prevent him or her from entering the intersection on red. Third, its maximum effectiveness depends on the amount of "look ahead" time is available, which is in turn dependant on the exact trap placement and maximum speed on the approach.

It would be advantageous to have a procedure that worked more like the Stage 1 rules (i.e., protection zones always clear), which could avoid these three issues. Instead of changing the number of vehicles allowed to be in the protection zone at the start of yellow, the number of vehicles would remain constant at zero. The size of the protection zone would be altered instead.

Another look at driver stopping behavior was required. Several references were consulted, but only one (Bonneson) had a theoretical model for the probability of stopping at the start of yellow (*3*). This model was developed based on observations of drivers at signalized intersections in Nebraska. The model is:

$$P(stop) = \frac{1}{1 + e^{5.29 + 0.0629V - 2.25T}}$$

where:
$P(stop)$ = probability of stopping;
V = speed at the start of yellow (ft/s); and
T = vehicle's travel time to reach the stop line/intersection (s).

T is based on both the vehicle's speed and its distance from the intersection. A plot of the probability of stopping for three common speeds at rural signalized intersections is shown in Figure 2-2. The solid vertical lines indicate the existing protection zone for passenger vehicles. For high-speed vehicles, the downstream end of the protection zone appears to be underutilized. Very few vehicles actually decide to stop between 2 s and 3 s from the stop line. Observation during the D-CS field trials generally supports that conclusion, although specific measurements were not taken. Therefore, it appears to be reasonable to reduce the protection zone by at least 1 s on the downstream end.

However, a 1 s reduction does not alter the fundamental problem. Instead of a 4 s gap to end the phase, D-CS would require a 3 s gap. In high-volume conditions, a 3 s gap is almost as difficult to find as a 4 s gap. Moreover, the effective gap for the original Stage 2 operation was theoretically 2 s, and actually 2.5 s due to rounding within the algorithm. An additional reduction in the size of the protection zone would be necessary to at least match the performance of the original system.

An examination of Figure 2-2 indicates that moving the upstream end of the protection zone from 6 s to 5.5 s would likely not be advantageous from a driver stopping perspective, especially at higher speeds. In addition, there could be issues with the available yellow time. The acceptable yellow times in the *Manual on Uniform Traffic Control Devices* has a maximum suggested value of 6.0 s (*9*). However, during the D-CS field trials, yellow times as low as 4.0 s were observed on high-speed approaches where values of up to 6.0 s would be more appropriate. Considering that the yellow times might or might not be adequate on a particular approach, reducing the upstream end of the protection zone appears to be an unsafe alternative. Moreover, the variable protection zones for trucks would be affected differently and would complicate the problem. Therefore, reductions to the upstream end of the protection zone were not considered further.

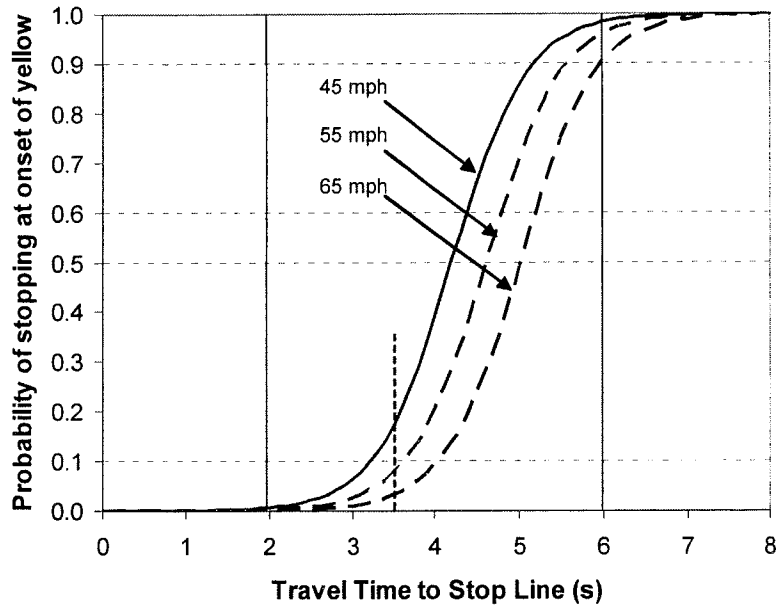

FIGURE 2-2. Driver stopping distributions for three common speeds at high-speed intersections.

An additional reduction of the protection zone size, to 3.5 s downstream, is shown as the dashed vertical line in Figure 2-2. For vehicle speeds above 55 mph, complete dilemma zone protection would still be provided. For a 45 mph vehicle, the probability of stopping at 3.5 s is about 17 percent, or about 1 in 6 vehicles would make that choice. Initially, that appeared to be a large number. However, a vehicle 3.5 s from the stop line would have to have the entire dilemma zone clear behind it for the phase to end, so the chances of a rear-end collision are minimal. The high-speed approaches observed during the D-CS field trial has yellow times of at least 4.0 s, so there is sufficient yellow time for vehicles to reach the intersection if they do not stop.

An additional protection zone reduction to 4.0 s was contemplated to provide improved operation. However, at 4 s, the stopping percentages were approximately 10 percent at 65 mph, 20 percent at 55 mph, and 39 percent at 45 mph. These percentages were deemed excessive at the lower speeds, so this reduction was not considered further.

The final protection zones are shown in Table 2-3. The downstream protection zone limit was adjusted for trucks as well as passenger cars to help reduce the impact of the extended protection zone for the trucks.

TABLE 2-3 Modified Stage 2 Protection Zones

D-CS Operating Stage	Protection Zone for Passenger Cars		Protection Zone for Trucks	
	Upstream	Downstream	Upstream	Downstream
1	6.0 s	2.0 s	7.5 s	2.0 s
2	6.0 s	3.5 s	7.5 s	3.5 s

After the new protection zones were selected, the algorithm was modified to incorporate them. In the process, it became apparent that the "look ahead" feature of the original D-CS algorithm was no longer needed in the modified algorithm. The decision to end the phase in the "second generation" algorithm was either "now" or "not now," and if the decision was to end "now," then it was the best possible condition to end the phase (i.e., all protection zones empty). There was no need to "look ahead" to find a better time to end the phase. The removal of this logic simplified the decision process of the algorithm.

The configuration shown in Table 2-3 was simulated using the cabinet-in-the-loop facility and compared to a set of simulations made using the original D-CS algorithm. Each simulation run was 20 hours long and used identical input files, and all of the D-CS and controller settings used were the same between the two runs. The yellow time used was 4.0 s. The only difference was the algorithm version used. The results are shown in Table 2-4. The dilemma zone used for comparison was the originally defined dilemma zone for D-CS, 5.5 s to 2.5 s.

TABLE 2-4 Simulation Results of Enhanced Algorithm to Original Algorithm

Run	Control Delay (s/veh)	Average Cycle Length (s)	Number of Vehicles in the Dilemma Zone		Number of Vehicles in the Dilemma Zone Between 2.5 s and 3.5 s	
			Pass. Cars	Trucks	Pass. Cars	Trucks
Original	16.1	74.1	193	12	56	4
Enhanced	16.0	73.1	169	18	74	5

The results in Table 2-4 indicate that the enhanced version of D-CS reduced the total number of vehicles in the dilemma zone. This was likely due to the modification to Stage 2 operation. Naturally, the number of vehicles between 2.5 s and 3.5 s in the dilemma zone increased because this area is not always protected in the enhanced algorithm. The preceding discussion indicated that these vehicles are not a serious collision risk, however.

The results of this analysis indicated that the changes to the protection zone for Stage 2 indicate that the enhancement may work at least as well as the original version. Therefore, the enhancement was included in the "second generation" D-CS algorithm.

DISTRIBUTED COORDINATION CAPABILITIES

Initially, it was believed that D-CS might have the ability to "self-coordinate" intersections due to it ability to detect arriving vehicles. However, D-CS does not possess the ability to end phases other than the high-speed through phases, and even if it did, the travel time from the detector traps to the stop line is too short to provide enough time to terminate other phases and return to the high-speed through phases that it does control. Extension for platoons of vehicles does not guarantee coordination downstream. A brief simulation exercise bore this out. If D-CS "self-coordinates" two intersections, it is by chance, not by design.

As an alternative, a modification of D-CS could be made to operate within the existing coordination structure to provide safer phase endings under some circumstances. Red-light violation research has indicated that drivers who perceive that they are part of a platoon of vehicles will tend to try to stay with that platoon, even if the phase changes in the middle of the platoon (*8*). This phenomenon is a source of many red-light violations. In many cases, if the phase could have been terminated a few seconds earlier (or a few seconds later), rather than at the specified time within the coordinated cycle, the red-light violations could be avoided. D-CS could identify appropriate gaps and be used to terminate coordinated phases early.

While the idea was promising, there are a series of challenges to this approach. First, the controller must use an early-return-to-green feature anytime D-CS ends a phase early to maintain the coordination of the phases. Even so, it may still be possible for D-CS to get the coordination "out of step" with surrounding intersections. In addition, testing the idea was going to be difficult. Theoretically, the simulation software could operate several intersections within its native environment, allowing D-CS to operate only at an intersection of interest. The coordination functions and simulated controllers within the simulation do not necessarily replicate the functions of their real-world counterparts, and in any event could not communicate with the controller connected to D-CS. Running several coordinated (and communicating) intersections would require a single computer running a traffic simulator to be connected to multiple interconnected signal cabinets, with the computer handling all of the vehicles in the network singlehandedly. Currently, the single computer used for cabinet-in-the-loop, connected to one cabinet, uses approximately 99 percent of the available CPU cycles on the computer. Apart from requiring a data acquisition card for each cabinet in the computer, and completely rewriting the software involved, the cabinets themselves would have to be available, and the researchers do not have access to enough controller cabinets to make the testing feasible. Finally, D-CS may not work with every controller in this way, so extensive testing of combinations of controllers and functions would be required. These considerations were far outside the scope and budget of this research.

Therefore, adaptation of D-CS to run in a coordinated environment must be delayed for a future development effort.

REAL-TIME REPORTING OF MEASURES OF EFFECTIVENESS

As originally designed, D-CS was already using a variety of data and inputs. For example, it was monitoring the state of the phases it controlled (i.e., green, yellow, red). It needed to know when the phase first changed to green so it could issue phase holds and reset its internal max timer. It needed to know when detector calls arrived for the conflicting movements so it could start its max timer. It needed to know when vehicles arrived at the detector trap in each lane, how fast they were going, and how long they were. It needed to know when the controller had actually ended the phase so it could turn off the ring force-offs and wait for the next green. While all of this information as being used, it was not being stored or summarized so that it could be viewed and used to make decisions or adjustments at the intersection.

The additional information that was selected for presentation included:

- green phase duration of D-CS controlled phases, by phase,
- conflicting movement waiting time for D-CS controlled phases, by phase,
- cycle length, by phase,
- number of times Stage 2 was used by D-CS, by phase,
- number of max outs, by phase,
- number of vehicles in the dilemma zone, by phase,
- entering volume, by approach and by lane, and
- average speed, by approach and by lane.

Adjusting D-CS to display this information was relatively simple. A new window was provided that displays the various data elements. The user can reset the display if he or she wants to restart the data collection for a specific time period (e.g., the morning peak period). The information can be used immediately by the engineer or recorded and used for future decision making.

STABILITY TESTING

After the extensions were completed, the modified, "second generation" D-CS algorithm was continuously exercised using the cabinet-in-the-loop facility for over 160 hours. This continuous running was intended to ensure that the enhanced algorithm would be stable for extended periods in the field.

SUMMARY

The laboratory development effort resulted in a "second generation" D-CS control algorithm that can provide dilemma zone protection that was specific to each vehicle's type, used a modified system to prevent max out during Stage 2, and provided real-time information to traffic engineers about intersection operations. This "second generation" algorithm proved to be slightly better than the original algorithm, and the "second generation" algorithm was extensively tested for stability prior to field implementation.

CHAPTER 3. FIELD IMPLEMENTATION AND STUDY

This section of the report details Phase 2 of the project, which was the field implementation of the "second generation" D-CS algorithm. The "second generation" D-CS algorithm was deployed at two intersections and studied using a before and after study design to determine the effectiveness of the "second generation" algorithm in actual field operation. The first subsection describes the basic study design, the second provides details about the intersections where the "second generation" D-CS algorithm was deployed, and the third subsection describes the results of the study.

FIELD STUDY DESIGN

The before and after study of the "second generation" D-CS algorithm consisted of videotaping the intersections where field deployment occurred both before and after the deployment, then determining the relevant measures of effectiveness from the videotape later in the laboratory. Consistent with earlier studies, four hours of videotape were recorded for each approach controlled by D-CS, both before and after deployment of the enhanced algorithm. (*6*) The configuration of the cameras for the Gainesville site is shown in Figure 3-1. The Bellmead site did not have a raised or depressed median, so the cameras were deployed on the roadside instead of in the median. The same measurements were taken as for the Gainesville site for each camera.

The videotape for the before and after periods was recorded on weekdays, with the before period collected the day before deployment of the "second generation" D-CS algorithm and the after period collected the day of deployment. The videotape was recorded for the same hours of the day for each period to avoid some of the time-related variations of traffic flows on highways and streets.

After the videotape was brought back to the laboratory, the videotape was reviewed by researchers, and the following data were extracted from it:

- control delay,
- cycle length,
- total volume,
- percent of vehicles stopping,
- red-light violations, and
- red-light violations by trucks.

These data were compared between the before and after periods to determine how effective the "second generation" D-CS algorithm was compared to the original.

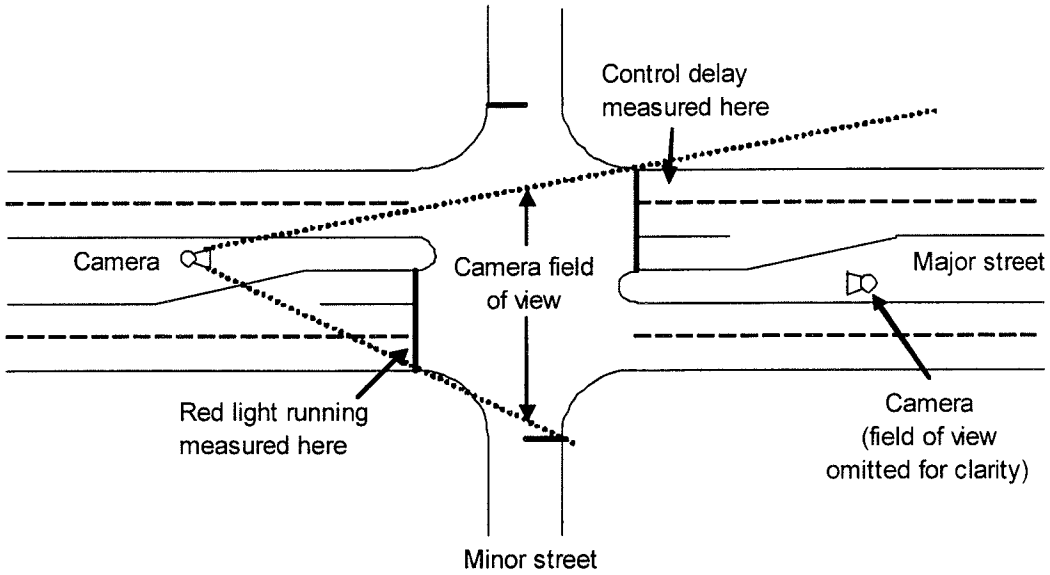

FIGURE 3-1 Camera placement for before and after study.

The overall control delay at the intersection was important for determining the operational benefits of the "second generation" D-CS algorithm. However, as indicated in Figure 3-1, the minor street movements were out of sight of the cameras for the D-CS approaches, making it impossible to estimate the control delay on those approaches from the videotape. Rather than videotape those approaches, the control delay on the minor movements was estimated for 15 minutes of each hour of videotape using the manual data collection method described in the *Highway Capacity Manual* (*10*). Because only fifteen minutes of control delay data were collected on the side streets, only the corresponding fifteen minutes of control delay for the major street movements was collected in the laboratory.

The cycle length is an indication of both the total volume being served by the intersection and how responsive the traffic signal is to serving arriving traffic. Because the traffic volumes should be similar from one weekday to the next, the resulting cycle length should be an indication how quickly traffic on all approaches are served. A longer cycle length after the "second generation" D-CS algorithm is implemented should indicate that the signal is less responsive to its minor movements.

The traffic volumes for all approaches were collected to be sure the before and after periods were similar. The volumes were inputs for the control delay calculations and were being collected in any event. Similarly, the number of vehicles stopping was also needed for the control delay calculations. However, fewer vehicles stopping on the D-CS controlled approaches in the after

period is a possible indication of the "second generation" D-CS algorithm choosing better times to end. If the "second generation" D-CS algorithm had any truck priority effects, then there should be a lower percentage of trucks being stopped.

Red-light violations are an indication of one or more factors, such:

- inadequate yellow times,
- incomplete dilemma zone protection,
- frequent max outs, or
- driver inattention or error. (*7*)

There are also other factors that can lead to increased red-light violations, such as congestion or poor signal visibility, but these factors were not present at the field deployment locations. The primary concerns for this study were incomplete dilemma zone protection and frequent max outs, both of which are under the control of the D-CS algorithm (in either form). The other factors listed should be consistent between time periods and should not affect the outcome of the analysis. Because a count of red-light violations can be affected by instantaneous volume variations, the number of violations was normalized by the total arriving volume and the number of cycles (i.e., the number of opportunities for red-light violations), as described by Bonneson, et al (*7*).

FIELD DEPLOYMENT SITES

The"second generation" D-CS algorithm was deployed at two of the existing D-CS sites in Texas. The sites used are shown in Table 3-1. These sites were chosen based on proximity, ease of modification, and having high truck volumes. The deployment consisted of downloading the "second generation" version of the algorithm to the existing D-CS computers at these two sites and activating it in place of the original software. No hardware modifications were necessary at either site beyond normal maintenance.

After additional laboratory testing, it was decided to only run the "second generation" D-CS algorithm during the data collection period, and then restore the original D-CS algorithm at the end of the field test. The original D-CS algorithm had proved to be "bug free" during years of laboratory and field operation, while the "second generation" D-CS algorithm might not be to that point yet. Also, in case one of the enhancements did not work as expected in the field, a sub-optimal or even hazardous control situation would not be left in place for any longer than absolutely necessary.

TABLE 3-1 Deployment Intersections for "Second Generation" D-CS Algorithm

Implementation Site	Nearest City	Major Road Characteristics			D-CS Installation Date
		Name	ADT	Percent Trucks	
U.S. 82 & F.M. 3092	Gainesville	U.S. 82	20,000	17	June 2003
U.S. 84 & Williams Rd.	Bellmead	U.S. 84	20,000	17	October 2003

Each of the deployment sites are described in detail in the following subsections. In each case, the D-CS detection shown in Figure 1-6 is present on both major road approaches but are not shown in the intersection diagrams.

U.S. 82 and F.M. 3092, Gainesville, Texas

The intersection of U.S. Highway 82 and Texas Farm-to-Market (F.M.) Road 3092 (the Gainesville site) is shown in Figure 3-2. U.S. 82 is a principal arterial for the region and the major road at this intersection, and F.M. 3092 is a rural collector. The fourth leg of the intersection is a local road. The intersection has protected only left turn phasing for U.S. 82, and the two minor road approaches are split phased (i.e., all movements on the local road proceed, and then all movements on F.M. 3092 proceed). The through and left turn movements on U.S. 82 have 60 ft long inductance loops for presence detection at the stop line, while the two minor road approaches are equipped with video detection. The approach speed limit on U.S. 82 is 55 mph.

D-CS was installed at the Gainesville site in June 2003. Compared to the original detection design, the original D-CS algorithm reduced crashes by 6 percent, red light violations by about 30 percent for all vehicles, and red-light violations by trucks by about 50 percent. (*6*) Deployment of the "second generation" D-CS algorithm occurred during May 2006.

Note the yellow time for the D-CS controlled phases. The yellow time had been 4.0 s when D-CS was originally installed, and later reduced 3.0 s at an unknown date, possibly as a result of a typographical error during data entry on the master computer containing signal timings for the district. According to one widely-used source, the Institute of Transportation Engineers' equations, at least 5.0 s of yellow should be used at this location. (*11*)

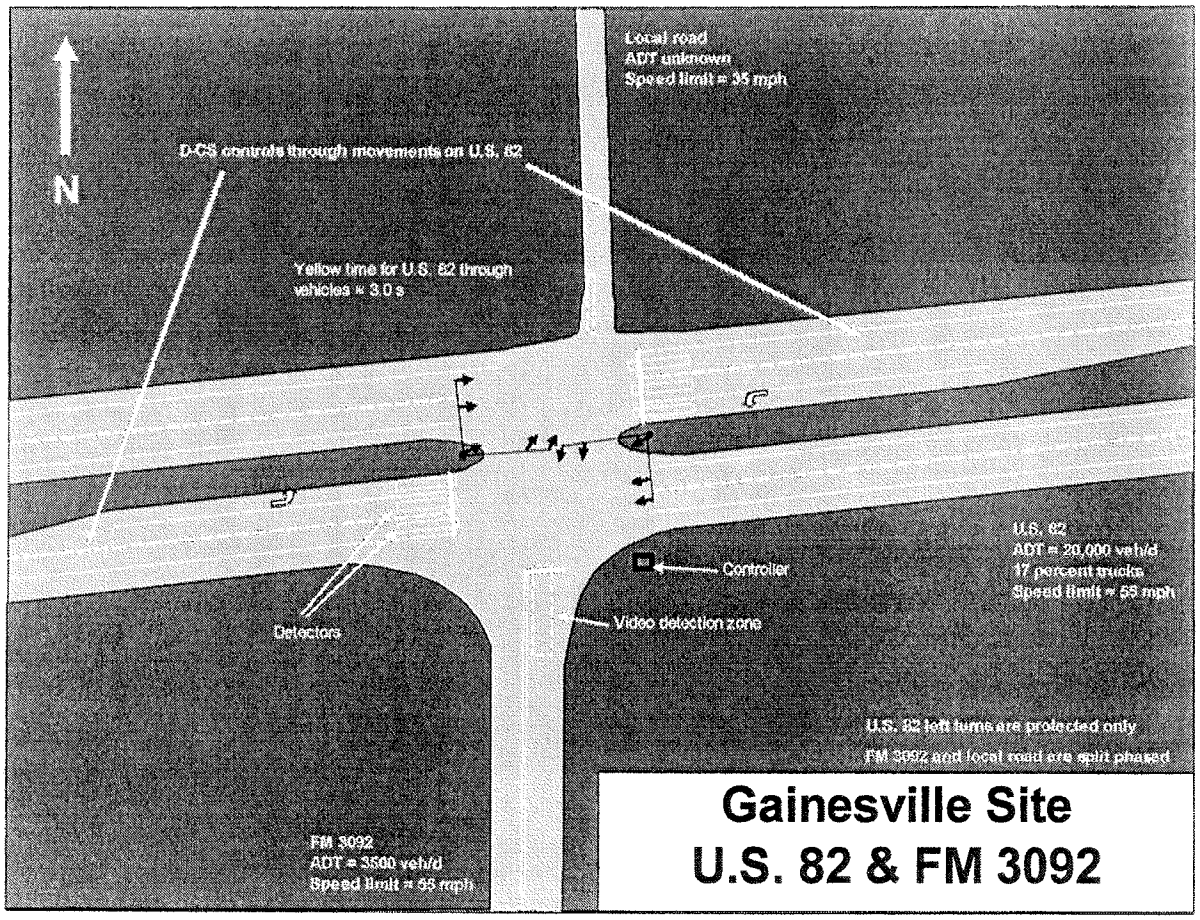

FIGURE 3-2 Gainesville D-CS Installation Site.

U.S. 84 and Williams Road, Bellmead, Texas

The intersection of U.S. Highway 84 and Williams Road (the Bellmead site) is shown in Figure 3-3. U.S. 84 is a principal arterial for the region and the major road at this intersection, and Williams Road is a collector roadway intersecting with U.S. 84 at a skew angle of 47 degrees. The intersection has protected-permitted left turn phasing for U.S. 84, with the protected phases lagging in both directions. Williams Road has permitted-only left turns. The left turn lanes and the Williams Road approaches have 40 ft inductance loops for presence detection. The through lanes of U.S. 84 have no presence detection at the stop line. The approach speed limit for U.S. 84 is 55 mph. Both right-turn movements from U.S. 84 have been provided with dedicated right-turn lanes due to the skew at the intersection.

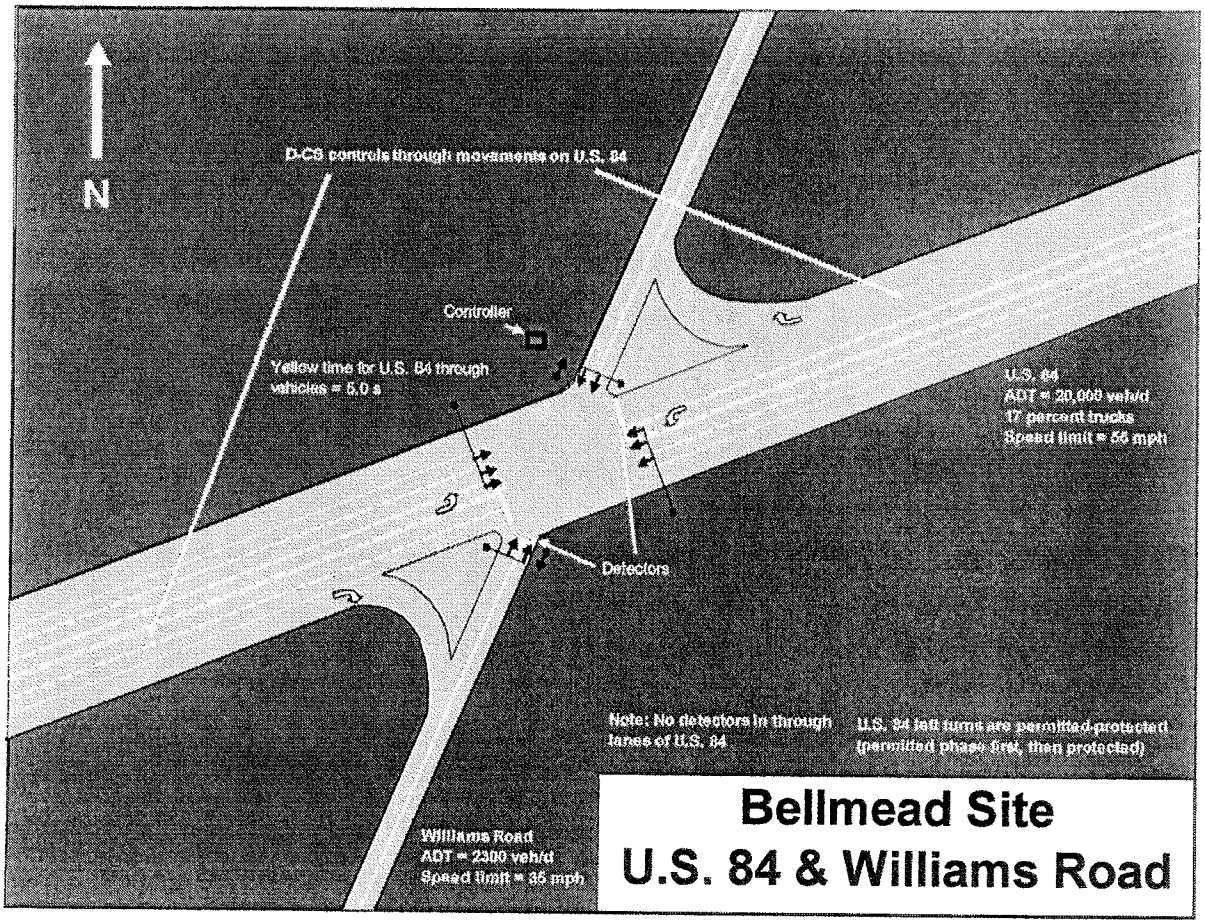

FIGURE 3-3 Bellmead D-CS Installation Site.

D-CS was installed at the Bellmead site in October 2003, concurrently with signalization of the intersection. Because a traffic signal was not present before D-CS installation, a before and after study was not possible at this location at that time. Deployment of the "second generation" D-CS algorithm occurred at this site in July 2006.

FIELD DEPLOYMENT STUDY RESULTS

The field data collected in the before and after study are shown in Table 3-2. In spite of recording both the before and after periods at the same times of day, the Gainesville site showed a 15 percent increase in traffic volume during the after period. This large increase makes the comparison between the before and after periods difficult using the raw data. The Bellmead site showed that Williams Road (the minor street) had a 14 percent decrease in traffic from the before

period to the after period. Also, only one red-light violator was seen at the Bellmead site during the entire study, so a red-light violation comparison was not possible at this intersection.

TABLE 3-2 Field Data Collection During Before-After Study

Site	Time Period	Volume		Percent Trucks[3]	Vehicles Stopping[4]		Red-Light Violations	
		Major Road Through[1]	All Minor Movements[2]		Major Road[5]	Major Road Trucks[6]	All[7]	Trucks[8]
Gainesville	Before	5588	764	15.7	464	40	23	14
	After	6408	880	19.9	483	42	26	16
Bellmead	Before	3524	704	18.4	94	7	0	0
	After	3592	608	15.9	115	10	1	1

Notes: 1- Major road through volumes for entire four hour period.
2- Combined volumes of all minor movements: major road left-turns + all minor street movements
3- Percent trucks (i.e., all vehicles longer than 25 ft) for the major road through movements
4- Major road through vehicles only
5- All vehicles (passenger cars + trucks) stopping for the major road through movements
6- All trucks (vehicles longer than 25 ft) stopping for the major road through movements
7- All vehicles (passenger cars + trucks) that are red-light violators for the major road through movements
8- All trucks (vehicles longer than 25 ft) that are red-light violators for the major road through movements

Because of the differences in volume between the before and after periods, the collected data were normalized to reduce the effects of volume. The normalized results are shown in Table 3-3.

TABLE 3-3 Normalized Data From Before-After Study

Site	Time Period	Intersection Control Delay (s/veh)[1]	Average Cycle Length (s)[2]	Percent Vehicles Stopping[3]		Red-Light Violations (violators/10000 veh-cycles)[6]	
				Major Road[4]	Major Road Trucks[5]	All[7]	Trucks[8]
Gainesville	Before	15.62	73.6	8.3	4.5	1.34	3.21
	After	15.15	76.2	7.2	3.3	1.37	2.61
Bellmead	Before	3.65	84.7	2.7	1.0	0.00	0.00
	After	3.80	94.9	3.2	1.6	0.06	0.06

Notes: 1- Average for all intersection movements for entire four hour period.
2- Average cycle length based on D-CS data.
3- Major road through vehicles only
4- All vehicles (passenger cars + trucks) stopping for the major road through movements
5- All trucks (vehicles longer than 25 ft) stopping for the major road through movements
6- Normalized per 10,000 veh-cycles as described by Bonneson et al. (7)
7- All vehicles (passenger cars + trucks) that are red-light violators for the major road through movements
8- All trucks (vehicles longer than 25 ft) that are red-light violators for the major road through movements

As stated previously, the Gainesville site was the first site to receive the "second generation" D-CS algorithm, consisting of separate car and truck protection zones, modified Stage 2, and real-time measures of effectiveness (MOEs). Table 3-3 indicates that the overall control delay decreased by about 3 percent in spite of a 15 percent increase in traffic volume in the after period. The average cycle length increased slightly due to somewhat longer major street green phases. These were the phases controlled by D-CS, indicating that the "second generation" D-CS algorithm was compensating for the increase in volume. The percent of vehicles stopping also decreased from the before period to the after period.

However, the number of red-light violations increased at the Gainesville site for both all vehicles and for trucks. After normalizing for total volume and number of cycles, truck violations decreased but passenger car violations increased, nearly cancelling each other out. Observation of red-light violators in the after period also indicated that they were occurring somewhat farther from the intersection than in the before period. This increase was due to a combination of three factors. First, the traffic volume increased by 15 percent in the after period, resulting in higher exposure for arriving traffic. Second, the "second generation" D-CS algorithm was shortening the protection zone, which could increase red-light violations if drivers misjudge the amount of yellow time available. Third, the very short yellow time at the Gainesville site (3.0 s) was actually shorter than the downstream end of the shortened protection zone in the "second generation" D-CS algorithm (3.5 s from the intersection). Combined, these three factors were responsible for the increase in red-light violations observed in the after period.

The second and third factors together revealed an unforseen issue relating to the shorter protection zone in Stage 2. In this case, 0.5 s of the approach was not protected during Stage 2 and was farther away from the intersection than the length of the yellow. A driver at that point could not either safely proceed through the intersection (i.e., that driver would enter the intersection on red) and was too close to stop without entering the intersection. Moreover, the drivers probably also expected that the yellow would be long enough for them to reach the intersection before the start of red. The short yellow and the reduction in the protection zone size were therefore combining to violate driver expectancy. D-CS was designed to use whatever settings were commonly employed in the controller, including whatever yellow times were selected. (*1*) Unfortunately, there was no way to predict all of the combinations of yellow times and D-CS protection zones that might be used, so the shortened protection zone in Stage 2 could unintentionally result in increased risk to motorists. Even though the overall increases in red-light violations were not large, it was decided to not proceed with the shortened protection zone in Stage 2 in future field deployments because of the additional risk involved.

The Bellmead site received the second field implementation, this time with a modified algorithm that used only the separate car and truck protection zones and the real-time MOEs. The results are also shown in Table 3-3. A small increase in control delay and percent of vehicles stopping occurred in the after period. The reason for these increases was that vehicles on Williams Road stopped somewhat larger platoons on U.S. 84 in the after period. The increase in cycle length was due to lower minor movement volumes and the resulting "dwell" periods. No delay occurs in those "dwell" periods, so there was very little change to average control delay. There were no red-light violators in the before period and only one after, so an assessment of red-light violations was not possible. Note that the D-CS controlled phases had a yellow time of 5.0 s at the Bellmead site. This length of yellow might help explain why there were essentially no red-light violators.

SUMMARY

The field deployment of the "second generation" D-CS algorithm indicated that the control delay of the intersections was not significantly affected by the changes made in the algorithm. Additionally, the percent of vehicles stopped did not change significantly, and the cycle length changes were due to factors beyond the control of the D-CS algorithm. The reasons for the increase in red-light violations at the Gainesville site has been discussed previously. The results were somewhat mixed; however, because the field conditions could not be tightly controlled, this situation was not entirely unexpected. It is likely that the laboratory analysis was correct, but because of noise in the field data, it could not be readily observed. Either more intersections or more time at each intersection (or both) would have been necessary to conclusively show the benefits of the "second generation" D-CS algorithm in the field.

The field deployment proved to be useful in illustrating the value of field testing of any new control scheme. The laboratory testing indicated that the modified Stage 2 protection zones would increase efficiency without compromising intersection safety. However, experience at the

Gainesville site showed that the laboratory results were only valid if the yellow time were at least 3.5 s. As a result, the modified Stage 2 protection zones were removed from the "second generation" D-CS algorithm.

CHAPTER 4. CONCLUSIONS AND RECOMMENDATIONS

The result of this project is a "second generation" D-CS algorithm that can provide more effective dilemma zone protection for trucks in the traffic stream. The laboratory results indicate that the best D-CS protection zone for trucks extends from 7.5 s from the intersection to 2.0 s from the intersection, while retaining the existing passenger car protection zone from 6.0 s from the intersection to 2.0 s from the intersection. The field deployment indicated that the laboratory findings were likely valid, although more field data would be necessary to confirm the findings.

The proposed enhancement that shortened the protection zone during Stage 2 rather than allow one passenger vehicle to be in the protection zone at the end of the phase showed promise in the laboratory. However, field deployment revealed a situation where motorist risk might be increased. Shortening the protection zone may yet be a worthwhile enhancement, but further research would be necessary. At this time, the use of any sort of protection zone reduction with D-CS is not recommended.

The real-time reporting of measures of effectiveness is a useful addition for individuals monitoring an intersection in real time. In terms of the performance of the algorithm, it had no operational effects.

The "second generation" D-CS algorithm still has room for additional development. For example, the extension to major-major intersections and interchanges could not be implemented within the budget of this project. Similarly, adaptation of D-CS for use in coordinated signal systems could not be implemented within the project budget. The protection zone increase for trucks still requires additional field verification, although simulation indicates that the 1.5 s increase is the optimal amount. Additional field studies would be necessary to completely confirm the laboratory findings. Finally, it was not possible to perform a safety study within the time frame of the project. Several years of operation using the "second generation" D-CS algorithm would be necessary to acquire enough safety data to determine its effectiveness.

CHAPTER 5. REFERENCES

1. Bonneson, J.A., D. Middleton, K. Zimmerman, H. Charara, and M. Abbas. *Intelligent Detection-Control System for Rural Signalized Intersections.* Report No. FHWA/TX-02/4022-2. Texas Department of Transportation, Austin, Texas, August 2002.

2. ITE Technical Committee 18 (P.S. Parsonson, chair). Small Area Detection at Intersection Approaches. *Traffic Engineering*, Vol. 44, No. 2, February 1974, pp. 8-17.

3. Bonneson, J. A., P. T. McCoy, and B. A. Moen. *Traffic Detector Design and Evaluation Guidelines*. Report TRP-02-31-93. Nebraska Department of Roads, Lincoln, Nebraska, 1993.

4. Williams, W. L. Driver Behavior During the Yellow Interval. In *Transportation Research Record 644*, Transportation Research Board, National Research Council, Washington, D.C., 1977, pp. 75-78.

5. Mahalel, D., and D. M. Zaidel. Safety Evaluation of a Flashing Green Light in a Traffic Signal. *Traffic Engineering and Control*, Vol. 26, No. 2 , February 1985, pp. 79-81.

6. Zimmerman, K., and J.A. Bonneson. *In-Service Evaluation of a Detection-Control System for High-Speed Signalized Intersections.* Report No. FHWA/TX-05/5-4022-1. Texas Department of Transportation, Austin, TX, August 2005.

7. Bonneson, J.A., K. Zimmerman, and M.A. Brewer. *Engineering Countermeasures to Reduce Red-Light-Running*, Report Number: 0-4027-2. Texas Transportation Institute, College Station, TX, August 2002.

8. Bonneson, J.A., and K. Zimmerman. *Development of Guidelines for Identifying and Treating Locations with a Red-Light-Running Problem.* Report No. FHWA/TX-05/4196-2. Texas Department of Transportation, Austin, Texas, September 2004.

9. *Manual on Uniform Traffic Control Devices*. U.S. Department of Transportation, Federal Highway Administration, Washington, D.C., 2003.

10. *Highway Capacity Manual 2000*. 4th ed. Transportation Research Board, National Research Council, Washington, D.C., 2000.

11. Institute of Transportation Engineers, "Determining Vehicle Signal Change and Clearance Intervals." Prepared by ITE Technical Council Task Force 4TF-1, Washington, D.C., 1994.