APPENDIX H

AASHTO Mxxx - Standard Test Method for the Bond of Prestressing Strands

1. Scope

1.1 This test method provides a means to assess the ability of 0.5 in. (12.7 mm) and 0.6 in. (15.2 mm) seven wire strand to bond with concrete and other cementitious materials. The method tests the bondability of strands that are made and intended for use as prestressing strands that conform to ASTM A 416.

1.2 This test does not purport to address all of the safety concerns, if any, associated with its use. It is the responsibility of the users of this test method to establish appropriate safety and health practices and determine the applicability of regulatory limitations prior to use.

2. Reference Documents

2.1 ASTM A 416
2.2 ASTM C 33
2.3 ASTM C 150
2.4 ASTM C 192
2.5 ASTM C 1437
2.6 ASTM C 305
2.7 ASTM C 109

3. Summary of the Test Method

Test specimens are prepared by casting a single, 0.5 in. (12.7 mm) or 0.6 in. (15.2 mm) seven wire strand into a cylinder of concrete mortar with a bonded length of 16 in. (400 mm). The constituents for the concrete mortar mixture are prescribed. The proportions for the mortar mixture must be established by the testing laboratory to meet the criteria for flow (ASTM C 1437) and mortar strength (ASTM C 109) specified herein. The mortar in the specimen is cured for approximately one day under controlled conditions. Each specimen is tested at one day of age by pulling the strand through the mortar at a prescribed rate of displacement. The pull-out force is recorded at 0.10 in. (2.5 mm) of total slip. A single Bond Test shall consist of 6 or more individual pull-out tests. The strand samples for the Bond Test shall be taken from the same lot or reel of strand. Strand from various manufacturers or from various lots or reels shall not be mixed in one Strand Bond Test.

4. Preparation of Test Specimens

4.1 Strand Specimens. The strand shall conform to ASTM A 416 and be intended for use in pretensioned or post-tensioned applications. Strand specimens for a single Strand Bond Test shall be taken from the same lot or the same

reel of prestressing strand. A minimum of six strand specimens are required for a single Strand Bond Test.

4.2 Concrete Mortar Mixture Constituents and Proportions. The concrete mortar mixture shall consist of sand, cement and water mixed thoroughly and uniformly. The sand shall conform to ASTM C 33 requirements for Fine Aggregate. The batch weight for sand shall be computed using the aggregate's unit weight at saturated surface dry (SSD) conditions. In computing weights for mixture proportions, the moisture content within the sand shall be accurately sampled and measured. The mixture proportions shall be corrected for the moisture content measured in the sand prior to mixing. Batch materials shall be handled in conformance with ASTM C 192. The cement shall conform to ASTM C 150 requirements for Type III cement. The water shall be potable and suitable for making concrete.

4.3 Mixing and Flow Rate. The concrete mortar and the test specimens shall be made in conformance with ASTM C 192. Measurements of slump and air content are not required. Mortar flow shall be measured and recorded according to procedures described in ASTM C 1437. The flow rate shall be greater than or equal to 100 but not greater than 125.

4.4 Consolidation. Test specimens shall be mechanically consolidated by vibration in conformance with ASTM C 192. The mortar shall be consolidated ensure a normal amount of air voids exist at the interface between strand and the surrounding concrete.

4.5 Curing. The concrete mortar and test specimens shall be cured in conformance with ASTM C 192. The concrete mortar shall be cured at 73 ± 3°F (23 ± 2°C) from the time of molding until the moment of test. Storage during the curing period shall be in a vibration-free environment.

4.6 Unit Weight of Mortar and Mortar Cubes. Measure and record the fresh unit weight of mortar. In addition, calculate and record the unit weight of hardened cubes prior to testing under compression.

4.7 Mortar Strength. Concrete mortar strength shall be evaluated in conformance with ASTM C 109 using 2 in. (51 mm) mortar cubes. The average mortar cube strength at 24 h shall not be less than 4500 psi. The mortar cube strength at 24 h shall not exceed 5000 psi. If the mortar cube strength is less than 4500 psi, the test may be used for acceptance purposes.

4.8 Each individual test specimen shall be made by casting one single strand concentrically in concrete mortar within a 5 in. (125 mm) diameter steel casing as described in Fig. B.1. The length of the steel tube shall be 18 in. as shown. The bonded length of the strand shall be 16 in., with a 2 in. long bond breaker as shown in the figure. The steel casing shall have sufficient rigidity and thickness to prevent radial cracking in the specimen during testing. The test specimen shall be cast with the longitudinal axis of the strand and the steel casing in the vertical position. The thickness of the steel tubing shall not exceed 0.135 in.

5. Test Procedure.

5.1 Timing of the Test. The NASP Bond Test shall be conducted 24 ± 2 hrs. from the time of casting the specimens.

5.2 Test Frame Stiffness. A stiff test frame (as shown in Fig. B.2) or equivalent, without torsional restraint shall be used for the Bond Test. The loading rate of the Bond Test shall not exceed 8000 lbs/min on 0.5 in. diameter strands or 9600 lbs/min. on 0.6 in. diameter strands. *Note: a higher loading rate can influence the results from the Standard Test – a displacement rate is prescribed below but we believe it is necessary to limit the loading rate.*

5.3 Instrumentation and measurement. The pull-out force shall be measured by a calibrated load measuring device, either electronically or hydraulically, or in combination of hydraulics and electronics. Pull-out force shall be measured to the nearest 100 lb increments. The relative movement of the strand to the hardened concrete mortar shall be measured. This measurement is typically called the "free-end slip" and shall be measured to 0.01 in. The strand slip shall be measured by a calibrated device.

5.4 Displacement Rate. Strand shall be pulled from the concrete by reacting against the transverse steel plate. The loading shall be controlled by strand displacement measured at the point where the load is applied to the strand. The displacement rate shall be 0.1 in. per minute (2.5 mm per minute).

5.5 The strand shall be loaded at a distance approximately 6 in. from the end of the specimen.

5.6 The pull-out force shall be recorded when the opposite end of the strand, or the "free end" achieves a total displacement of 0.10 in. relative to the hardened concrete mortar.

5.7 If the hardened concrete mortar exhibits cracking in two or more of the six individual tests, then all results of NASP Strand Bond Test shall be discarded and new specimens prepared for a new NASP Strand Bond Test.

6. Reporting.

6.1 Sample Size. A single Strand Bond Test shall consist of a minimum of six (6) individual tests conducted on single strand specimens.

6.2 For each individual test, report the pull-out force that corresponds to a relative displacement of 0.10 in. between the strand and the hardened concrete mortar.

6.3 For the Bond Test, measure and record the result from each individual test. Compute the average pull-out force from the individual tests and report the value as the average value for the Bond Test. If one of the specimens exhibited radial cracking during testing, disregard the pull-out value of that specimen when reporting results and report the average of the other five specimens. If two or more of the specimens exhibit radial cracking,

the entire results should be disregarded and the NASP Bond Test performed again in its entirety.

7. **Frequency of Testing**

The Bond Test shall be performed quarterly for each manufacturing facility that produces seven-wire strand intended for use in pretensioned or post-tensioned concrete, and otherwise conforming to ASTM A 416.

The Bond Test shall be required when the manufacturing process that is used to make the seven wire strands is changed or altered.

8. Acceptance and Certification

8.1 **0.5 in. Strand.** Strand shall be accepted for pretensioned and post-tensioned prestressed applications when the average value of the NASP Strand Bond Test is not less than ***10,500*** lbs and no individual test result is less than ***9000***lbs.

8.2 **0.6 in. Strand.** Strand shall be accepted for pretensioned and post-tensioned prestressed applications when the average value of the Strand Bond Test is not less than ***12,600 lbs***. and no individual test result is less than ***10,800 lbs.***

8.3 Certification of Results. Certification of the results shall be provided upon request. The certification shall include the average Pull-Out Force from the Bond Test, and the smallest Pull-Out Force from the six individual tests that were performed as the Bond Test.

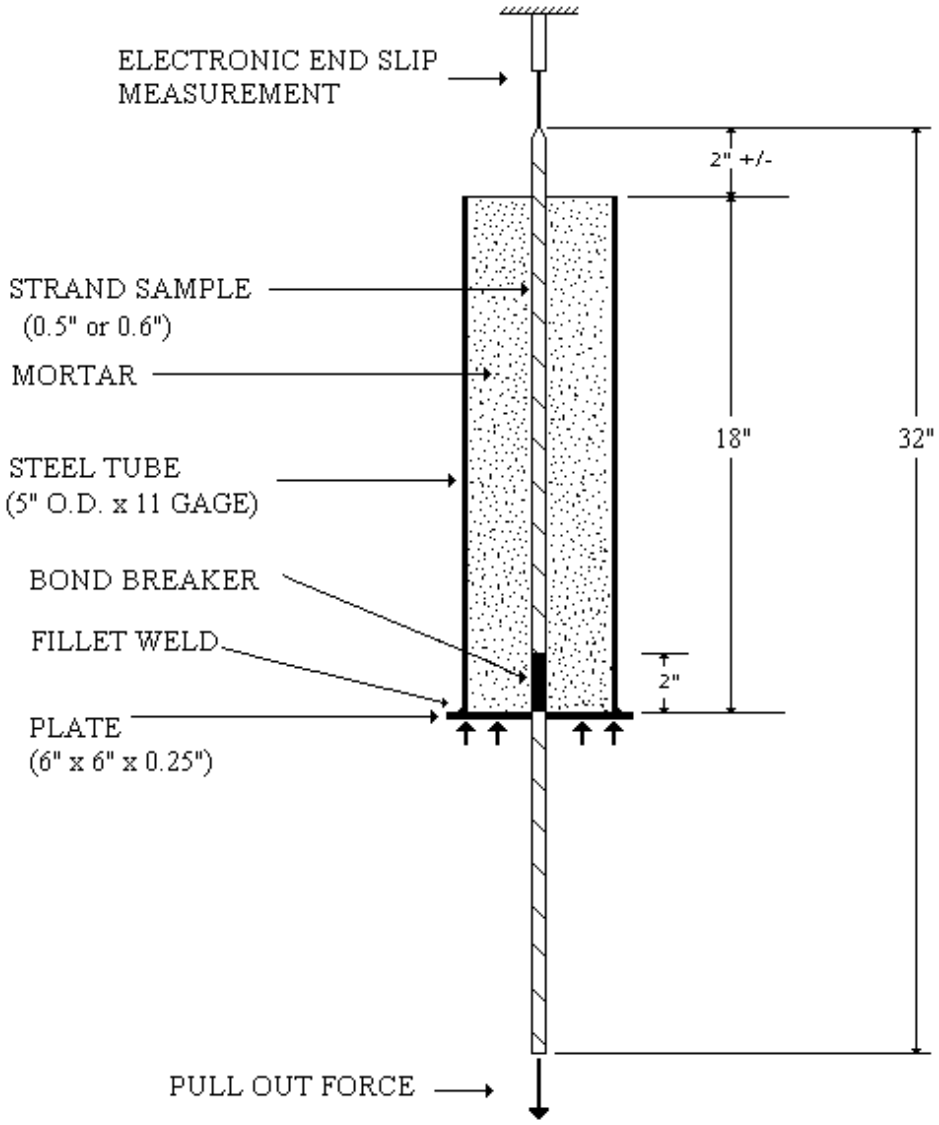

Figure H.1. NASP Test Setup

Figure. H.2. Typical Stiff Test Frame to Conduct NASP Bond Test