APPENDIX F

FIELD INSPECTION OF BRIDGES

TABLE OF CONTENTS

F.1 NEBRASKA DEPARTMENT OF ROADS (NDOR)

With help from NDOR, the research team selected two bridges for inspection. The first bridge is located on Highway 6, near the 168th Street exit, over a branch of the Papillion Creek, in Omaha, NE. The second bridge is located on I-80 over the Platte River in Cass County, Nebraska.

F.1.1 Papillion Creek Bridge (Figure F.1.1-1)

The research team jointly with NDOR personnel inspected a bridge just east of the 168th Street exit from West Dodge Street (Highway 6) in Omaha, NE. This bridge, consisting of one 122-ft and two 95-ft spans over the Papillion Creek, was constructed in 2003. The plan and elevation views of the bridge are shown in Figure F.1.1-2. The bridge deck is 117 ft wide on the East end and 124 ft wide on the West end. The red circle in Figure F.1.1-1 denotes the location of the Papillion Creek Bridge.

Figure F.1.1-1. Papillion Creek Bridge, Omaha, NE

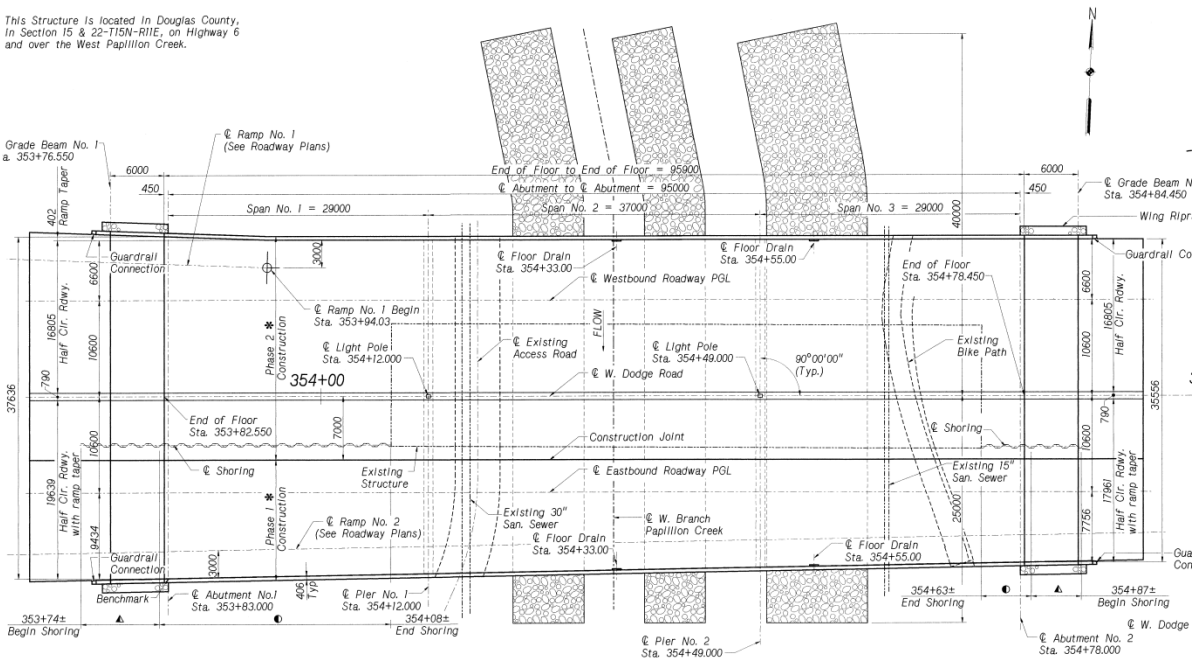

Plan

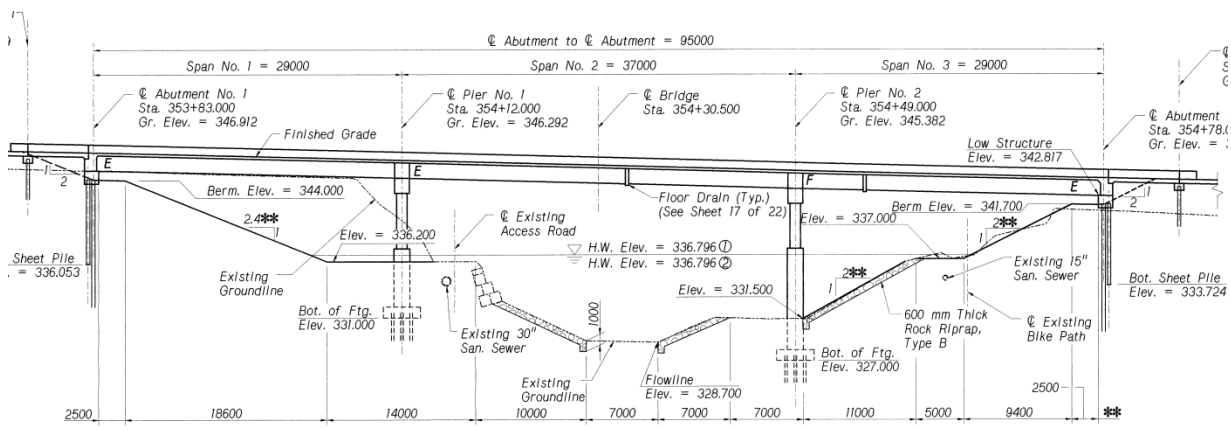

Elevation

Figure F.1.1-2. Papillion Creek Bridge, Plan and Elevation View

The bridge deck is supported by fourteen NU1350 girders, as shown in Figure F.1.1-3. To inspect the girder ends, the research team went around the abutment and got underneath the bridge deck (i.e., Hwy 6). The NU-1350 girders in the center span were prestressed with fifty-four 0.6 in.-diameter, 270 ksi strands (8 draped strands and 46 straight strands). (Figure F.1.1-4)

For the two outer spans, the NU-1350 girders were prestressed with forty-six 0.6 in.-diameter, 270 ksi strands (4 draped strands and 42 straight strands). All of the girders were cast with concrete strength $f_c^{'}$ = 8,000 psi and release strength $f_{ci}^{'}$ = 5,000 psi.

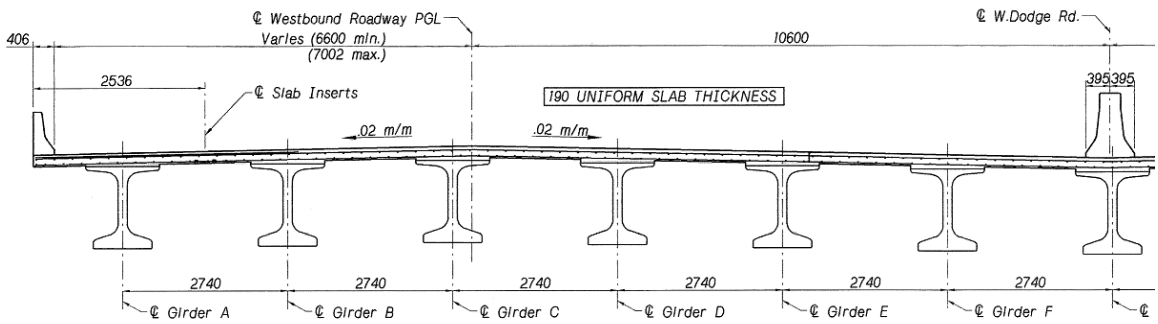

Westbound

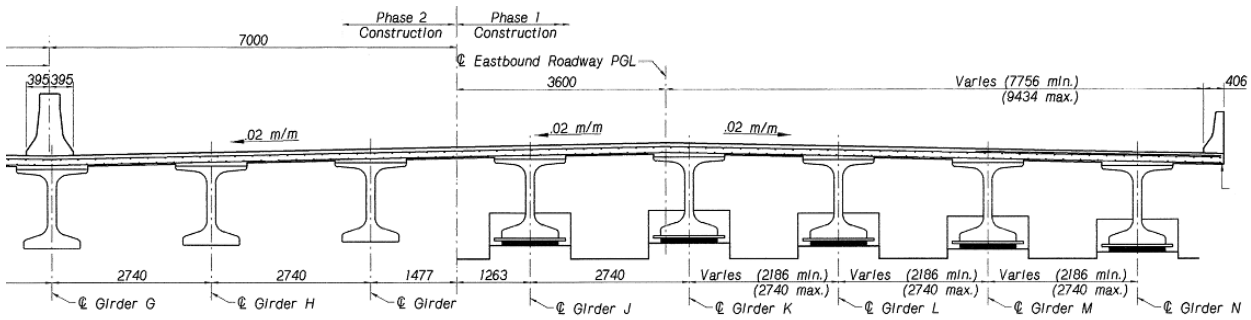

Eastbound

Figure F.1.1-3. Papillion Creek Bridge, Bridge Cross Section

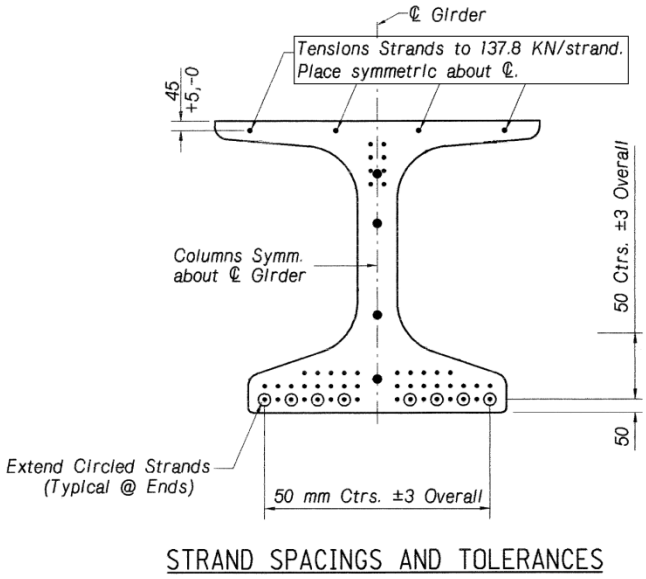

Figure F.1.1-4. Papillion Creek Bridge, Center Span, Girder Cross-Section at Ends

Figure F.1.1-5. Bridge on Highway 6, over a branch of the Papillion Creek in Omaha, NE

The bridge was constructed in 2002-03 and girder ends were consistently encased from the top flange to the top of the bottom flange, as shown in Figure F.1.1-6. The team members were able to get close access to all the girder ends in order to look for end zone cracks. No visible cracking was noted at the ends of any of the girders. All of the girders were in excellent condition. The

concrete encasing at the ends of each girder extended about a foot in from the end. It is possible, although unlikely, that very small end zone cracks may have existed within a foot from the end of the girder, but these would have been covered by the end block. The end block would prevent any water or chlorides from penetrating these possible cracks, therefore they would not be a threat to the girder.

Figure F.1.1-6. Close up at the end of one of the interior girders

F.1.2 Platte River Bridge

On Wednesday January 7, 2009, members of the research team visited a bridge on Interstate I-80 over the Platte River. The bridge was in Cass County, Nebraska and is in the process of being replaced with new spans of precast prestressed concrete girders. It consists of ten spans total; two 156-ft spans and eight 166 ft-6 in. spans. The bridge deck is 206-ft wide. The red circle in Figures F.1.2-1 and F.1.2-2 shows the location of the Platte River Bridge on the aerial photo.

Figure F.1.2-1. I-80 Platte River Bridge, Nebraska

The research team compiled and reviewed the girder production records and post-pour product inspection reports from Coreslab Structures, Inc., Omaha, NE, for the Platte River Bridge project.

Figure F.1.2-2. Bridge on I-80 over the Platte River, Nebraska

There were two 156 ft spans and eight 166 ft 6 in spans, shown in Figure F.1.2-3. Westbound and Eastbound sections were separated, with six prestressed NU2000 girders supporting each section (Figures F.1.2-4 & F.1.2-5). The NU2000 I-girders were cast with concrete strength $f_c^{'}$ = 11,000 psi and release strength $f_{ci}^{'}$ = 6,800 psi. The girders are prestressed with fifty-eight 0.6-in. diameter strands. The top flange width is 48.5 in., the bottom flange width is 38.5 in. and the web is 6 in. The girders were produced in 2006.

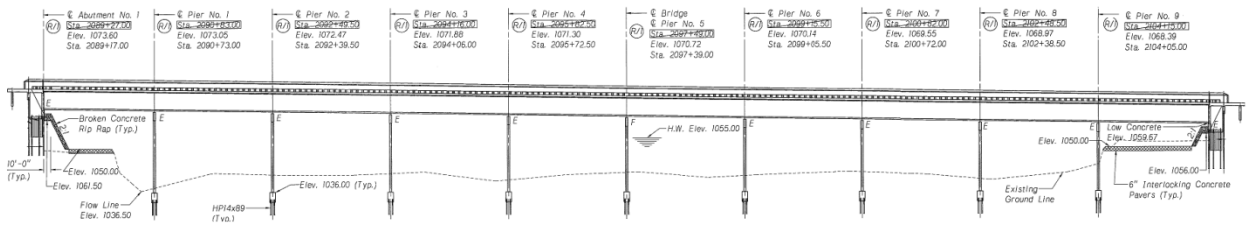

Figure F.1.2-3. Platte River Bridge, Elevation View

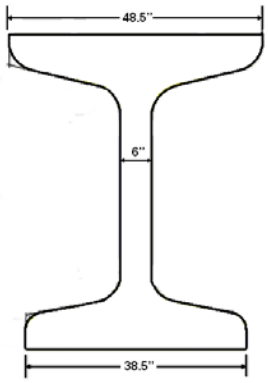

Figure F.1.2-4. NU 2000 I-girder

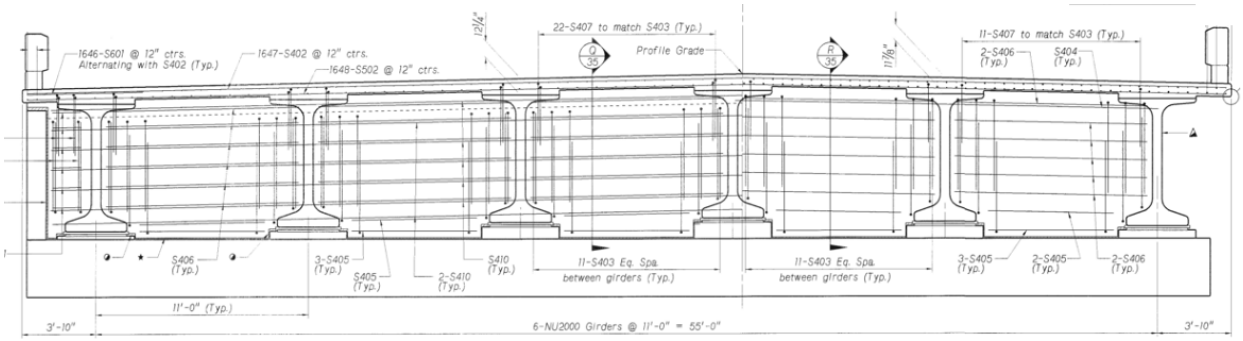

Figure F.1.2-5. Platte River Bridge, Bridge Cross Section: Westbound

The team was able to inspect both interior and exterior girders on the Platte River Bridge. A man lift was used to get right up next to the girder ends on the Eastbound section. This way, crack width and measurements could be accurately taken. The team also walked along the Eastern side of the river and was able to inspect each of the girder ends resting on that bank on both the Westbound and Eastbound sections.

Every one of the girders inspected experienced end zone cracking. The crack patterns, as well as the crack widths and lengths, were fairly consistent from one girder to another. A measuring tape and crack comparator were used to measure the length and width of the cracks. (Figure F.1.2-6). The cracks in the end zones were reported to be generally 0.004 to 0.008 in. wide and ranged from 2 to 6 feet long. The location of the cracks was approximately along the top flange traveling downward diagonally. Smaller cracks appeared in the web near the bottom flange traveling diagonally upward.

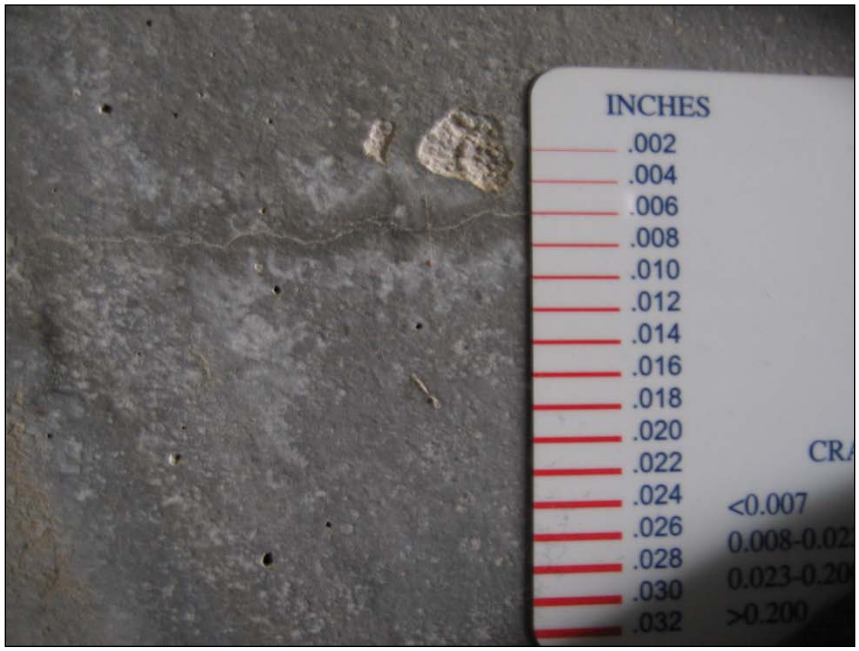

Figure F.1.2-6. Crack Comparator showing the crack width

Although evidence of end zone cracking was prevalent, there were no signs of further damage to the girders such as reinforcement corrosion or delamination. Most cracks had a white colored substance surrounding them, making the cracks easier to locate. This white substance may be efflorescence. The girders were in great shape, and there appeared to be no structural nor durability problems occurring. The girders have only been in place for less than a few years, but so far no trouble is observed.

Examples of the girder ends with end zone cracks are shown below in (Figures F.1.2-7 to F.1.2-10). The cracks are highlighted in red for clarity. Crack lengths are also given in red text.

Figure F.1.2-7. End Zone Cracks on an Interior Girder, Center Span

Figure F.1.2-8. End Zone Cracks on an Exterior Girder, Center Span

Figure F.1.2-9. End Zone Cracks on an Exterior Girder, Eastern End Span

Figure F.1.2-10. End Zone Cracks on Interior Girders, Eastern End Span

Figure F.1.2-10(cont.). End Zone Cracks on Interior Girders, Eastern End Span

The team received inspection documents from Coreslab Structures Inc. An example of one of the report pages is shown below in Figure F.1.2-11. These inspections took place at the precast plant after being released from the forms in 2006. The inspector was looking for any mistakes, imperfections, or damages to the girders. The inspection sheet prompts the inspector to check for correct size and widths, as well as checking for spalls, cracks, honeycombs, voids, or exposed steel. There is a drawing of a girder end on the sheet that the inspector can mark on to indicate the location, shape, and size of any cracks or imperfections. Notes on the condition are left in the open space next to the drawing. Each individual girder design has its own unique Piece Mark number. This number identifies each girder in the presressing plant. Each number belongs to only one girder per project, and there are no repetitions. This is the way that Coreslab identifies their girders. However, this number is not carried over once the girder leaves the precasting plant. Once the girder is in the field and placed on the bridge, there is no way to identify its Piece Mark number and no way to get previous information on any specific girder. Therefore, it is possible to follow a specific girder from the precasting yard, to storage, to the construction site. If a girder was repaired, one would not be able to find this girder later on the bridge to see if the repaired damages were causing any problems. If a girder on a bridge started to look or act abnormal after years of use, there would be no way to look up that girder's specific history to see what kind of cracking, damage, or repair it was subjected to earlier on in life. This is why the research team recommends giving each individual girder an identification number.

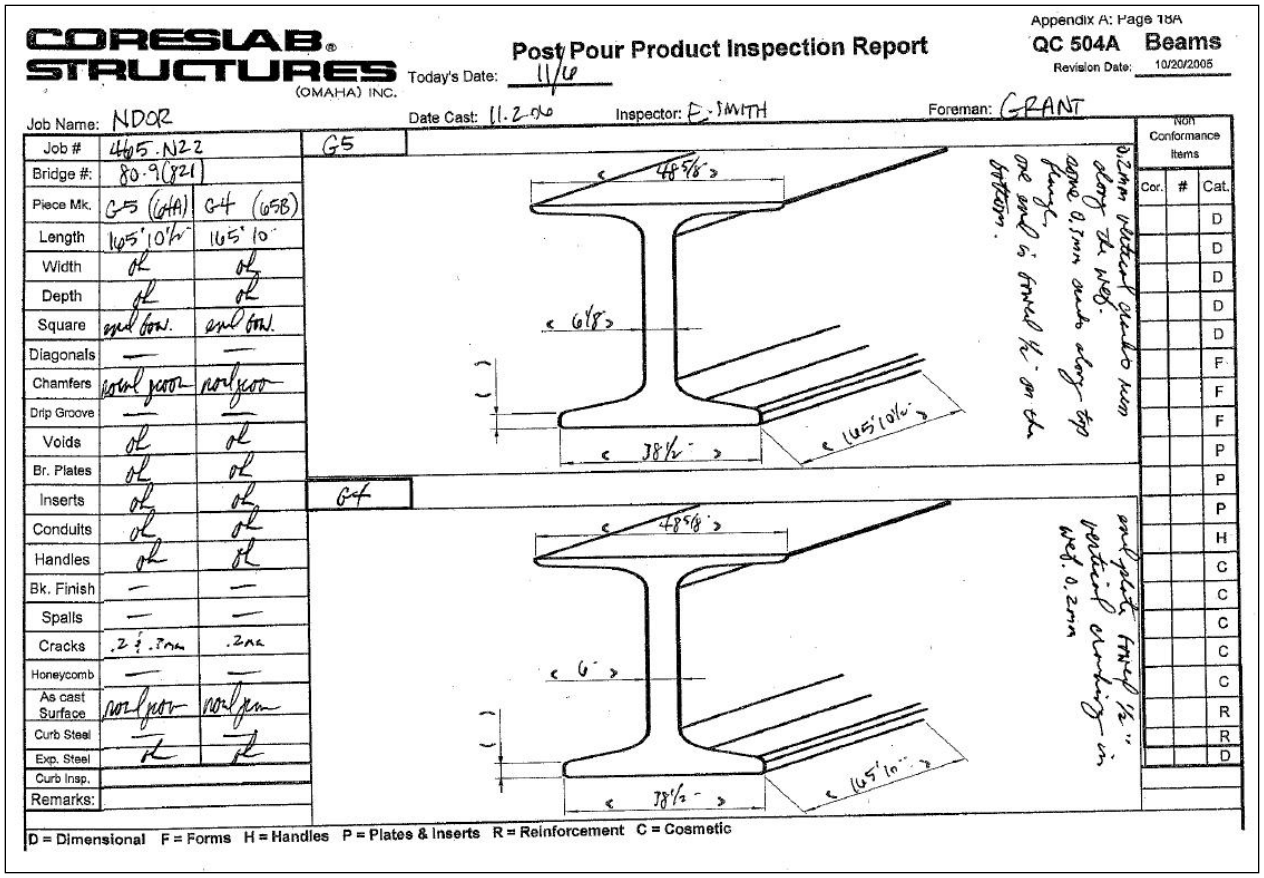

CORESLAB STRUCTURES (OMAHA) INC.

Post Pour Product Inspection Report

Appendix A: Page 18A

QC 504A Beams

Revision Date: 10/20/2005

Today's Date: 11/6

Job Name: NDOR Date Cast: 11.2.06 Inspector: E. SMITH Foreman: GRANT

Job #	4605.N22	
Bridge #:	80.9(821)	
Piece Mk.	G5 (64A)	G4 (65B)
Length	165'10½"	165'10"
Width	ok	ok
Depth	ok	ok
Square	end form.	end form.
Diagonals	—	—
Chamfers	not per	not per
Drip Groove	—	—
Voids	ok	ok
Br. Plates	ok	ok
Inserts	ok	ok
Conduits	ok	ok
Handles	ok	ok
Bk. Finish	—	—
Spalls	—	—
Cracks	.2 & .3mm	.2mm
Honeycomb	—	—
As cast Surface	not per	not per
Curb Steel	—	—
Exp. Steel	ok	ok
Curb Insp.		
Remarks:		

Non Conformance Items		
Cor.	#	Cat.
		D
		D
		D
		D
		D
		F
		F
		F
		P
		P
		P
		H
		C
		C
		C
		C
		C
		R
		R
		D

D = Dimensional F = Forms H = Handles P = Plates & Inserts R = Reinforcement C = Cosmetic

Figure F.1.2-11. Inspection sheet from Coreslab of a Platte River Bridge Girder

Although every single girder that was observed experienced end zone cracking, there is no record of these cracks drawn on the inspection figures. There are records of vertical cracks and shrinkage cracks but nothing mentioned about end zone cracks. Coreslab informed us that the inspectors do not record end zone cracks unless they exceed limitations. If they feel that the cracks are nothing to be worried about, then they are ignored. The presence of these cracks is expected, and it would be redundant and tedious to mark down the same cracks for every girder, especially if they are inconsequential. The only way these cracks would be reported would be if the inspector felt they were severe enough to be repaired. It was reported that some girders required repair with epoxy, although none of these cases were for end zone cracks.

The team had previously visited the Coreslab precasting plant to acquire their repair procedures. For the Platte River Bridge, the precaster used their typical repair procedure of REM 800 with a coating of Strongbond over that. The full repair procedure of Coreslab Industries is given in Section F.2.1 of this appendix.

The shop-drawing for the bridge are given in the following pages.

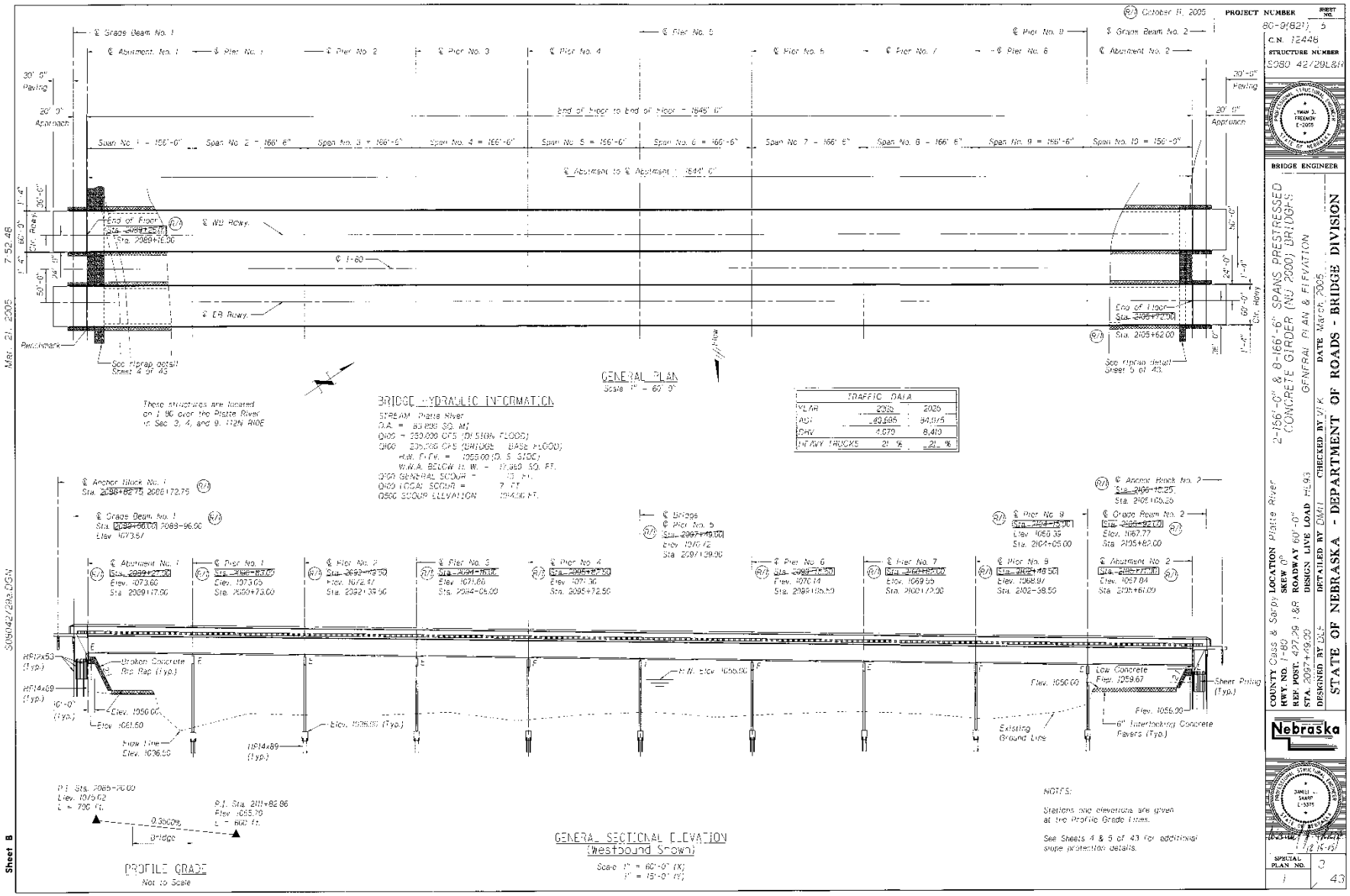
STATE OF NEBRASKA - DEPARTMENT OF ROADS - BRIDGE DIVISION
2-166'-0" & 8-166'-6" SPANS PRESTRESSED CONCRETE GIRDER (NU 2000) BRIDGES
GENERAL PLAN & ELEVATION
GENERAL PLAN
BRIDGE HYDRAULIC INFORMATION
TRAFFIC DATA
GENERAL SECTIONAL ELEVATION (Westbound Shown)
PROFILE GRADE
NOTES:
Stations and elevations are given at the Profile Grade lines.
See Sheets 4 & 5 of 43 for additional slope protection details.
PROJECT NUMBER
STRUCTURE NUMBER
BRIDGE ENGINEER
DATE March 2005
CHECKED BY
DETAILED BY
DESIGNED BY
COUNTY Cass & Sarpy LOCATION Platte River
HWY. NO. I-80
REF. POST. 477.29 & 8.8
STA. 2097+49.00
SKEW 0°
ROADWAY 60'-0"
DESIGN LIVE LOAD HL93
SPECIAL PLAN NO.
Nebraska

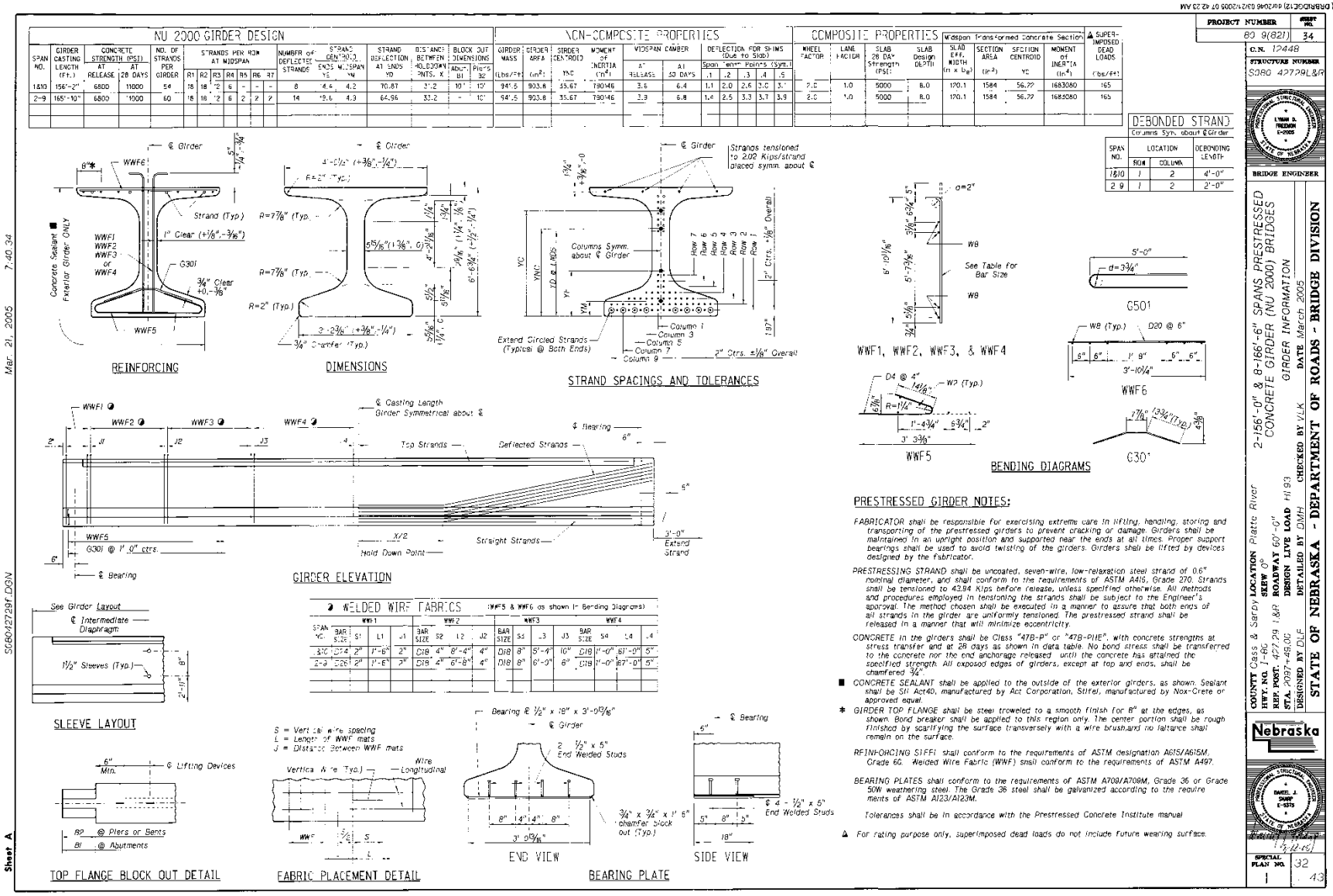
NU 2000 GIRDER DESIGN
NON-COMPOSITE PROPERTIES
COMPOSITE PROPERTIES Midspan Transformed Concrete Section
DEBONDED STRAND
Columns Sym. about ℄ Girder
REINFORCING
DIMENSIONS
STRAND SPACINGS AND TOLERANCES
WWF1, WWF2, WWF3, & WWF4
G501
WWF6
WWF5
G30
BENDING DIAGRAMS
GIRDER ELEVATION
WELDED WIRE FABRICS
SLEEVE LAYOUT
TOP FLANGE BLOCK OUT DETAIL
FABRIC PLACEMENT DETAIL
END VIEW
SIDE VIEW
BEARING PLATE
PRESTRESSED GIRDER NOTES:
FABRICATOR shall be responsible for exercising extreme care in lifting, handling, storing and transporting of the prestressed girders to prevent cracking or damage. Girders shall be maintained in an upright position and supported near the ends at all times. Proper support bearings shall be used to avoid twisting of the girders. Girders shall be lifted by devices designed by the fabricator.
PRESTRESSING STRAND shall be uncoated, seven-wire, low-relaxation steel strand of 0.6" nominal diameter, and shall conform to the requirements of ASTM A416, Grade 270. Strands shall be tensioned to 43.94 Kips before release, unless specified otherwise. All methods and procedures employed in tensioning the strands shall be subject to the Engineer's approval. The method chosen shall be executed in a manner to assure that both ends of all strands in the girder are uniformly tensioned. The prestressed strand shall be released in a manner that will minimize eccentricity.
CONCRETE in the girders shall be Class "47B-P" or "47B-PIE", with concrete strengths at stress transfer and at 28 days as shown in data table. No bond stress shall be transferred to the concrete nor the end anchorage released until the concrete has attained the specified strength. All exposed edges of girders, except at top and ends, shall be chamfered ¾".
■ CONCRETE SEALANT shall be applied to the outside of the exterior girders, as shown. Sealant shall be Sil Act40, manufactured by Act Corporation, Stifel, manufactured by Nox-Crete or approved equal.
✱ GIRDER TOP FLANGE shall be steel troweled to a smooth finish for 8" at the edges, as shown. Bond breaker shall be applied to this region only. The center portion shall be rough finished by scarifying the surface transversely with a wire brush and no laitance shall remain on the surface.
REINFORCING STEEL shall conform to the requirements of ASTM designation A615/A615M, Grade 60. Welded Wire Fabric (WWF) shall conform to the requirements of ASTM A497.
BEARING PLATES shall conform to the requirements of ASTM A709/A709M, Grade 36 or Grade 50W weathering steel. The Grade 36 steel shall be galvanized according to the requirements of ASTM A123/A123M.
Tolerances shall be in accordance with the Prestressed Concrete Institute manual.
▲ For rating purpose only, superimposed dead loads do not include future wearing surface.
2-156'-0" & 8-166'-6" SPANS PRESTRESSED CONCRETE GIRDER (NU 2000) BRIDGES
GIRDER INFORMATION
STATE OF NEBRASKA - DEPARTMENT OF ROADS - BRIDGE DIVISION
Nebraska
Sheet A
Mar. 21, 2005 7:40:34
S080427291.DGN

F.2 REPAIR PROCEDURES USED BY PRECAST PRODUCERS IN NEBRASKA

F.2.1 Coreslab Structures, Inc., Bellevue, NE

On August 12, 2008, members of the research team visited the precast plant Coreslab, Inc., Bellevue, NE. The goal was to observe repair procedures typically used by Coreslab on the end zone cracks of their girders.

When applying non-epoxy sealants, the company always uses two layers of product on the ends of their girders, but has a variety of choices on what to use.

<u>The first layer:</u>

- A hydraulic cement called REM 800 is applied to all girders. REM 800 comes as a dry powder. It can be applied as either a paste or as a grout.
- To blend it into a paste, a small amount of water is introduced to the powder until the mixture consistency resembles fresh concrete, as shown in Figures F.2.1-1 and F.2.1-2. The side of the concrete girder is wet down so that the cracks may be viewed more easily. Then the REM 800 paste is rubbed into the cracks by hand, as shown in Figure F.2.1-3. It is rubbed into only the cracks themselves, and not the entire end of the girder.

Figure F.2.1-1. REM 800 before mixed with water

Figure F.2.1-2. REM 800 paste

Figure F.2.1-3. Filling the cracks with the REM 800 paste

- In order to apply REM 800 as a grout, water is added until the product resembles a slurry. The slurry mixture is rubbed by hand over the entire end of the girder, as shown in Figure F.2.1-4. The product covers the girder surface 4 to 5 feet from the end, such that all of the cracks are covered. In order to look decorative, a brush is used vertically over the entire area to create vertical lines in the product, as shown in Figure F.2.1-5. This process also evens out and thins the layer of slurry. If the product is too thick it may crack or chip off when drying. A second layer can always be added on if they want the product on thicker. When dry, the REM 800 cannot be rubbed off of the girder easily.

Figure F.2.1-4. Applying the REM 800 as a grout on the entire surface by hand

Figure F.2.1-5. Finishing the surface with a brush

<u>The second layer:</u>

- Coreslab then has a variety of choices for the second layer, depending on if they want a waterproof sealant or just a cosmetic cover.
- One option is a Portland cement mixture. They combine white and dark Portland cement until they are able to match the color of the girder itself. Then water is added to the mixture until it resembles the consistency of latex paint. This is done by eye. A little bit of the chemical Strongbond is added to the cement. Strongbond acts as a glue to keep the cement mixture in place. This solution is then applied to the whole end of the girder using a roller, as shown in Figure F.2.1-6 and F.2.1-7. Two passes with the roller may be necessary to make sure that all surfaces are covered. The end is covered a distance of 4 to 5 feet in, so that all of the cracks are covered by this second layer. This cement mixture is applied to every girder end. When dry, the mixture is easily rubbed off of the girder if the client decides that they don't want it. If the decision is made to keep the product on the girder, Strongbond is sprayed over the entire end to seal on the product. This, once again, acts as a glue and makes it so that they cement mixture cannot be rubbed away. A larger amount of Strongbond can also be added to the original Portland cement mixture to add additional strength to the mix.

- If Coreslab or the client decides that they do not want the cement mixture covering the end for cosmetic or other reasons, it may be rubbed off the side of the girder or not used at all. In this case, Strongbond is sprayed directly onto the REM 800 layer.

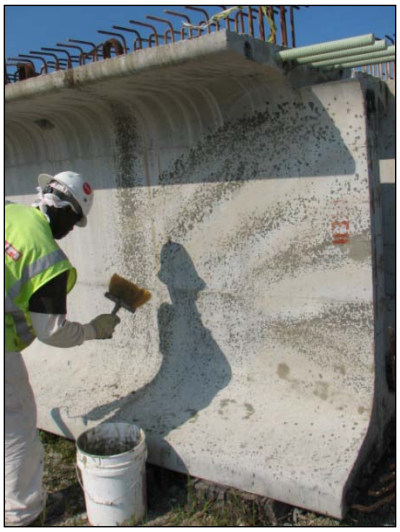

Figure F.2.1-6. Spraying water on the girder before applying the Portland cement mixture

Figure F.2.1-7. Applying the Portland cement mixture with Strongbond using a roller

- Strongbond acts as a glue to keep the other products permanently in place, however it is not waterproof. If Coreslab wants to waterproof the ends they use the product Stifel V. The Stifel V liquid is put into a spray bottle and applied directly after the REM 800 layer. It can be applied only over the direct location of the cracks, or it can be applied to the entire girder end,

depending on where the REM 800 is placed. Coreslab only applies Stifel V to girders that will be on the exterior of the bridge. Most of the ends of the interior girders will be encased in a diaphragm, and it may have an adverse effect on the bond between the girder end and the concrete diaphragm. For interior girders, only REM 800 and Strongbond are used.

For any cracks that the company feels would be water penetrable, epoxy injection is used. Coreslab epoxy injects any cracks that are wider than 0.010 to 0.013 in., depending on the client's specifications. They use a Hilti brand CI 060 EP Crack Injection Epoxy. Ports are affixed at intervals along the crack and then a putty is used to seal the outer surface of the crack opening. The epoxy is then pumped into the ports with a simple hand pump, much like a caulking gun.

F.2.2 Concrete Industries, Inc., Lincoln, NE

On Monday, August 18, 2008, members of the research team visited the precasting plant Concrete Industries in Lincoln, NE. The purpose of the trip was to observe the repair procedure for end zone cracking in the webs of their pretensioned concrete girders.

The company uses the product DegaDeck Crack Sealer Plus. DegaDeck is a reactive methacrylate resin. It is a waterproof, two-component sealant that leaves a hard, glossy finish. When mixed, it is highly toxic and flammable and the fumes may be a health concern. Therefore, the workers that apply the substance are required to wear protective gear such as gas masks and goggles when working with the product. They also wear full body disposable Hazmat suits so the product does not get on their clothes or skin, as shown in Figure F.2.2-1. The DegaDeck is a purple tinted liquid with viscosity similar water. A Hardener in powder form is mixed into the liquid, as shown in Figure F.2.2-1. The amount of Powder Hardener added varies according to the temperature outside. The cooler the temperature, the more Powder Hardener is required.

Figure F.2.2-1. Preparation of DegaDeck

The pot life of the solution is only about 15-20 minutes, so the product must be applied immediately. Concrete Industries uses rollers, as shown in Figure F.2.2-2, to cover the entire end of the girder, up to about 4 feet from the girder's end, such that all of the end zone cracks are covered. The very ends of the girder that are perpendicular to the strand direction are also covered with DegaDeck, , as shown in Figure F.2.2-3.

Figure F.2.2-2. Applying DegaDeck using a roller

Figure F.2.2-3. End zones after applying DegaDeck

Concrete Industries used to use Transpo Sealate in place of DegaDeck. Transpo Sealate is a three-component mixture and is more labor intensive to mix and apply. The company much prefers the use of DegaDeck. Specifications of Transpo Sealate and DegaDeck are given in Appendix E of this report.

F.3 VIRGINIA DEPARTMENT OF TRANSPORTATION (VDOT)

The research team jointly with VDOT has selected two bridges on Rte 33 and one bridge on Rte 614 for inspection. Girders of these bridges experienced end zone cracking at strand release. Some of the girders were repaired in the precast yard.

The two bridges on Route 33 are located in West Point, VA and they are next to each other. The first bridge is over the Mattaponi River (right hand side of Figure F.3-1) between King William & Queen Counties, and the second bridge is over the Pamunkey River (left hand side of Figure F.3-1) between New Kent & King William Counties. The research team inspected both bridges on July 1, 2008 from 9:30 AM to 3:30 PM. The inspection was done using *Aspen Aerial, UP60*, truck as shown in Figure F.3-2.

The third bridge is located on Rte 614 (Hickory Fork Raod) over Carter's Creek, 1.6 miles west of Rte 17, in Gloucester County, VA. Due to the low clearance of the bridge, the research team could not use the *Aspen Aerial* truck, *UP60*, to inspect the girder. Inspection was done by walking under the bridge and using ladders to reach the girders.

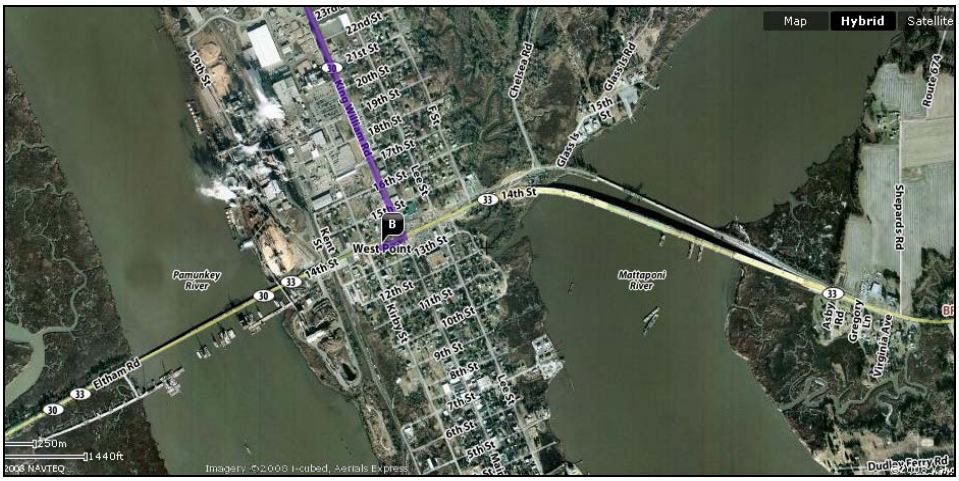

Figure F.3-1. Bridges over the Mattaponi River and Pamunkey River

Figure F.3-2. Aspen Aerial Truck, UP60

F.3.1 Bridge on Rte. 33 over Mattaponi River, West Point, VA

Figure F.3.1-1 shows the plan and elevation views of the bridge, which consists of 28 spans as shown in Table F.3.1-1. The cross section of the bridge consists of seven girders at 10 ft – 6 in. and two overhangs, each 3 ft – 8 in. long, as shown in Figure F.3.1-2. Girders of all spans were lightweight concrete, 120 pcf, minimum concrete strength at release was 6 ksi and 8 ksi at 28-days. ½ in., 270 ksi, low relaxation pretensioned strands were used in all spans. Lightweight

concrete, 120 pcf, was also used for the cast-in-place deck. Figure F.3.1-3 shows the key plan for the post-tensioned spans, “j” through “q”, and Figure F.3.1-4 gives the details of the girder cross section for various spans.

Table F.3.1-1. Details of the bridge on Rte. 33 over Mattaponi River

Unit	Span	Type of reinforcement	Average span length	Girder depth
Abutment “A”				
West side approach				
A	“a to f”	Pretensioned	6 spans @ 75 ft	45 in.
B	“g to i”	Pretensioned	3 spans @ 145 ft	95.5 in.
Expansion joint				
C	“j to m” over Mattaponi River	Pretensioned/ post-tensioned	200, 240, 240, & 200 ft	95.5 in.
Expansion joint				
D	“n to q” over Mattaponi River	Pretensioned/ post-tensioned	200, 240, 240, & 200 ft	95.5 in.
Expansion joint				
East side approach				
E	“r to v”	Pretensioned	5 spans @ 90 ft	53 in.
F	“w to bb”	Pretensioned	6 spans @ 75 ft	45 in.
Abutment “B”				

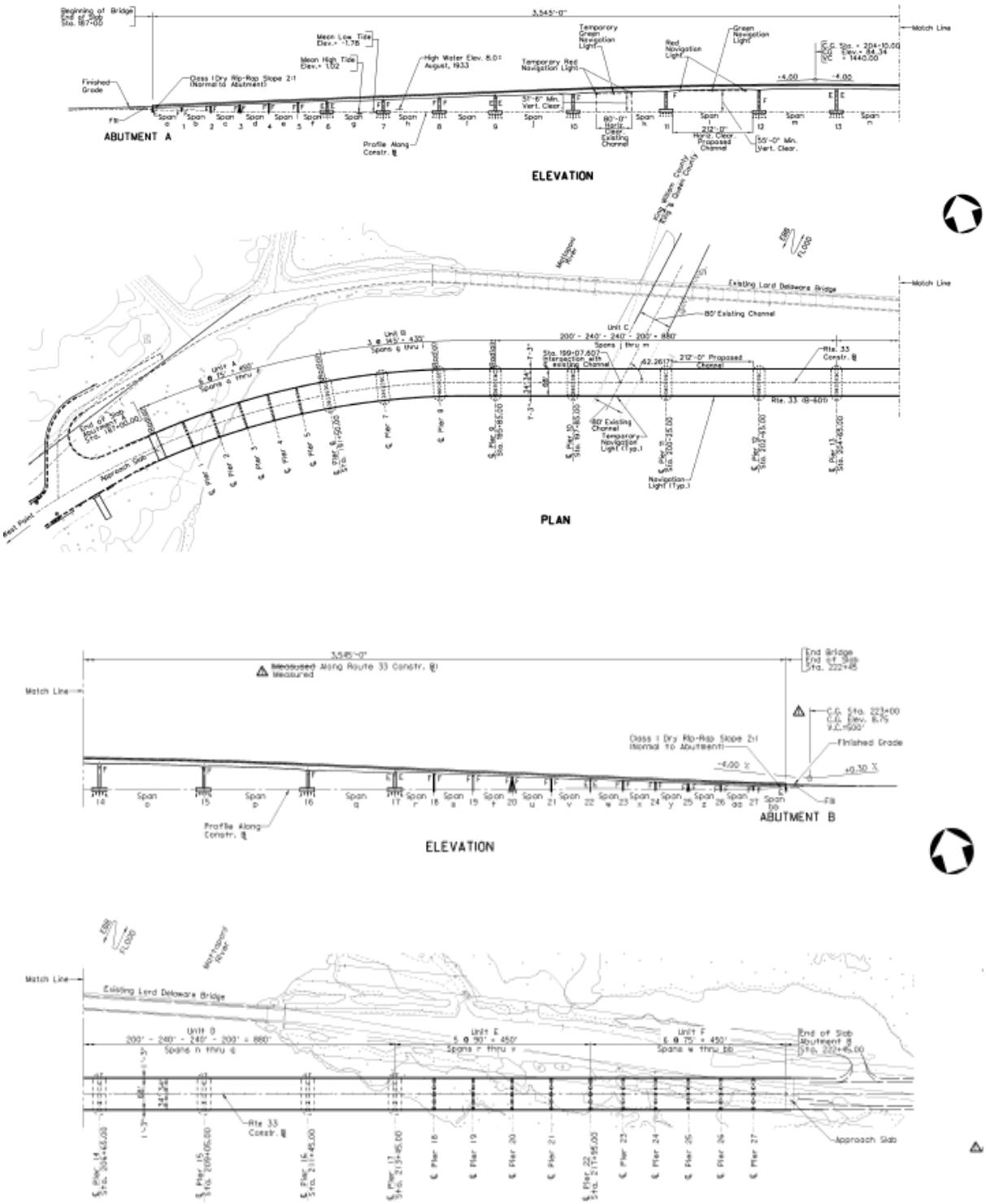

Figure F.3.1-1. Plan and elevation views of the bridge

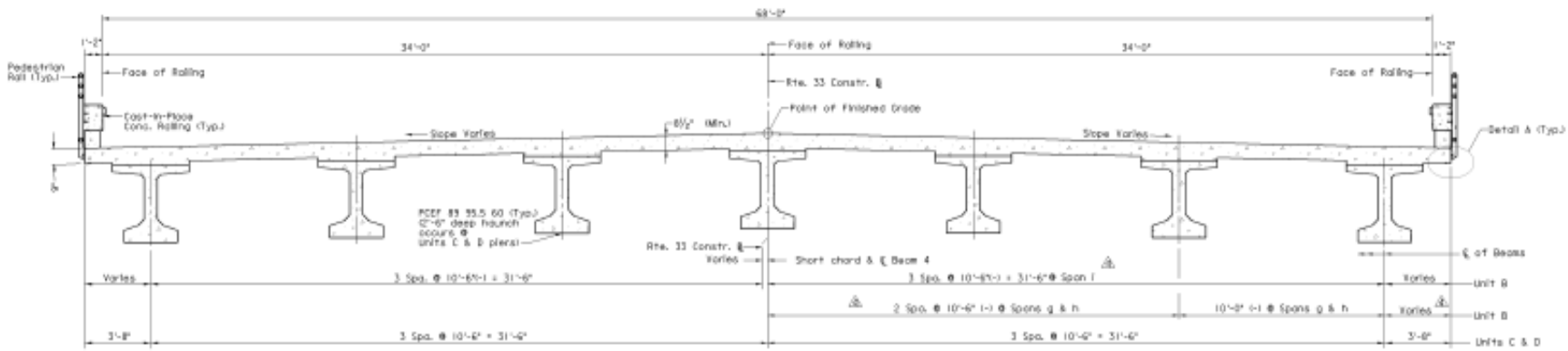

Figure F.3.1-2. Cross section of the bridge

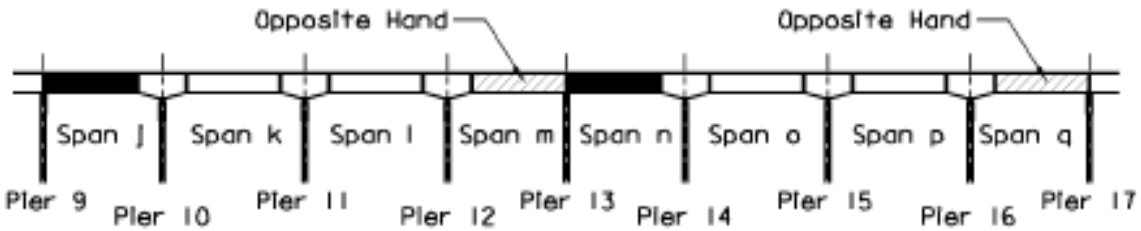

(a)

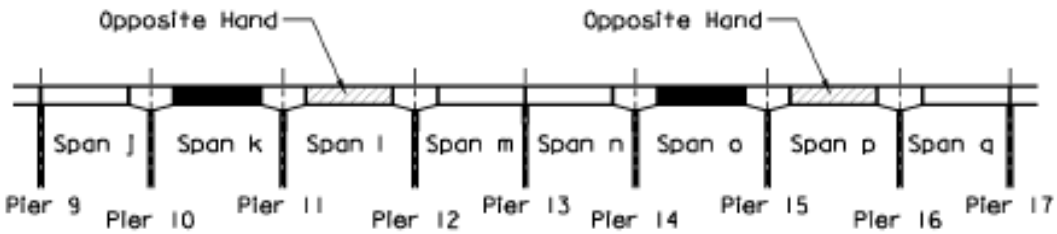

(b)

Figure F.3.1-3. Key plan of the post-tensioned spans: (a) End segments, (b) Drop-in segments

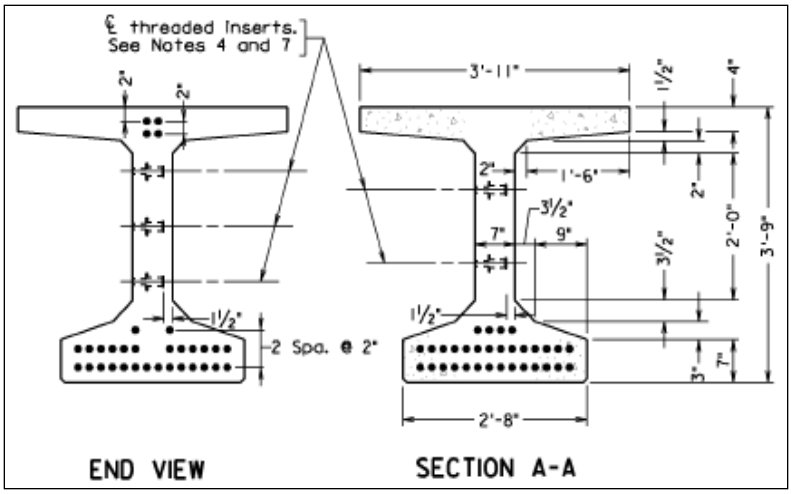

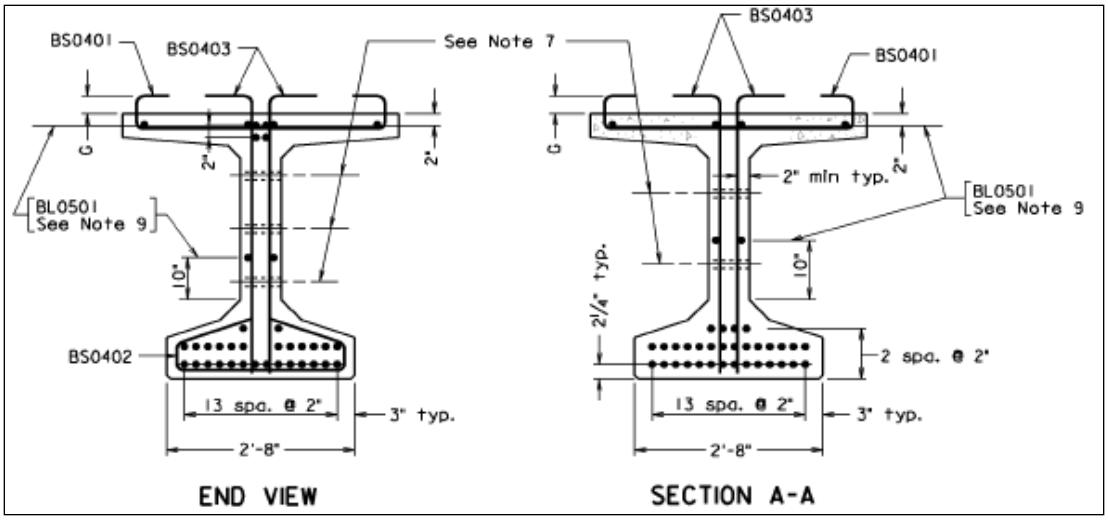

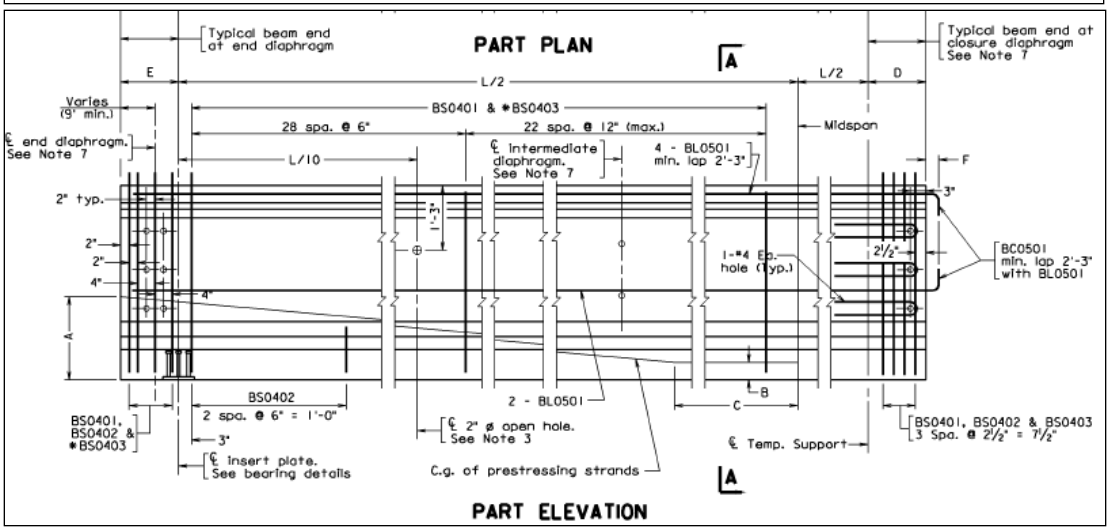

Figure F.3.1-4. Cross section details of Spans “a to f” and “w to bb” (Distance D = 10 in., E = 12 in.)

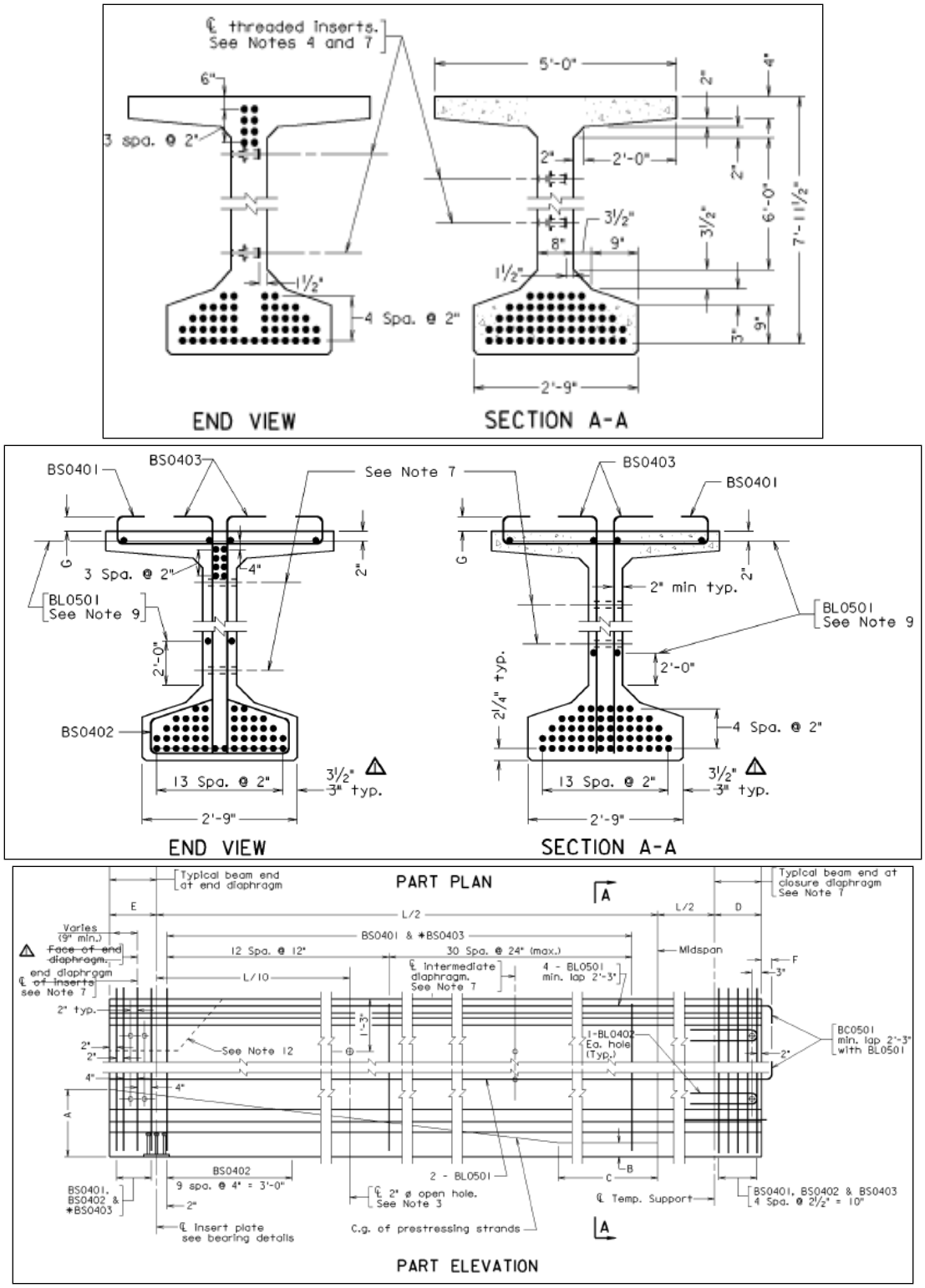

Figure F.3.1-4(cont.). Cross section details of Spans "g to i" (Distance D = 18 in., E = 12 in.)

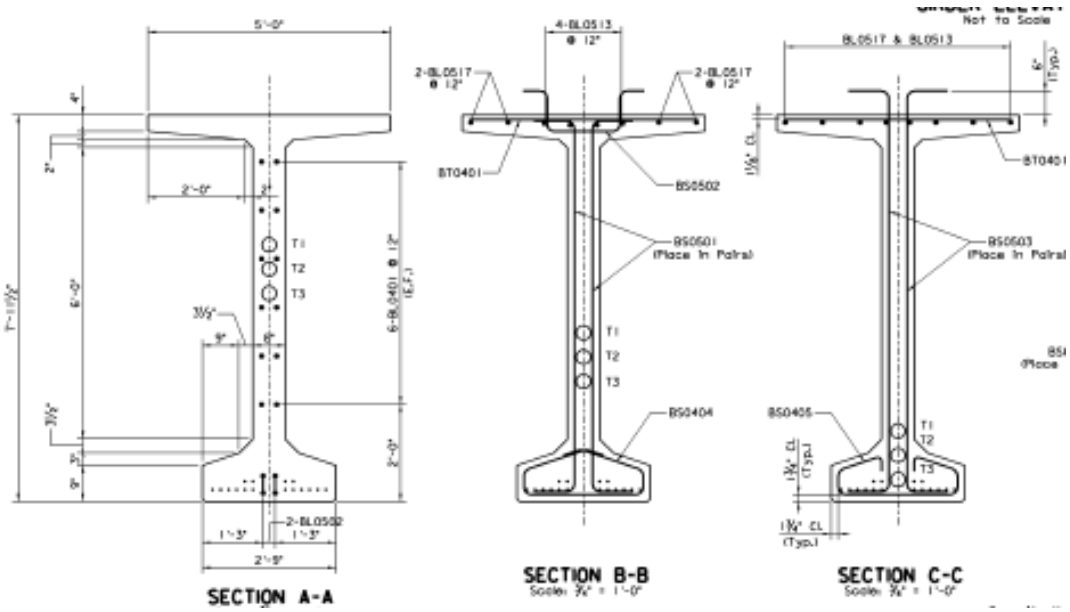

End segments

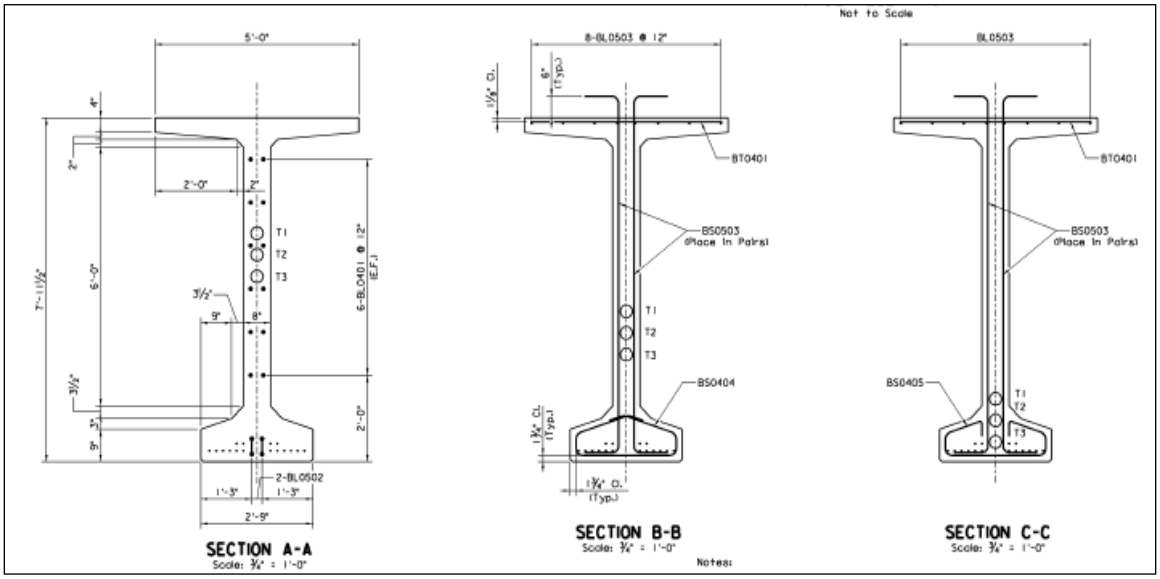

Drop segment

Figure F.3.1-4(cont.). Cross section details of the post-tensioned spans “j to q”

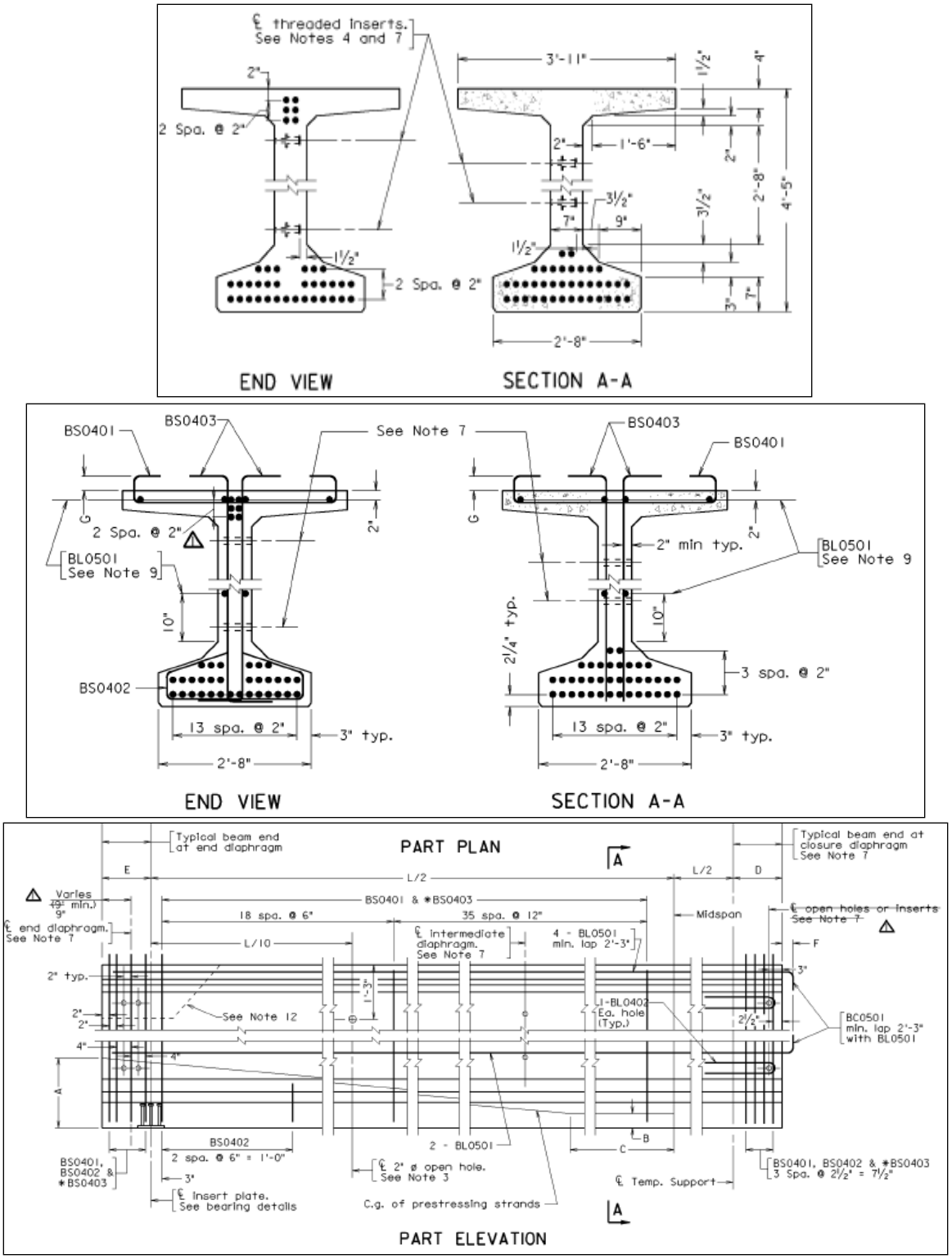

Figure F.3.1-4(cont.). Cross section details of Spans "r to v" (Distance D = 10 in., E = 12 in.)

Shop inspection reports:

The concrete girders were fabricated by Standard Concrete Products (SCP), Inc. of Tampa, FL, on October 2005. According to the shop inspection reports, end zone cracking was reported in almost of all the girders. Also, cracking was reported in the top flange of the post-tensioned girders. The width of end zone cracks in the web ranged from hairline to 0.016 in. at time of release and some of these cracks grew up to 0.020 in. at time of shipping (about 4 to 6 weeks after release). The guidelines for repair as submitted by SCP and approved by VDOT were as follow:

1. Web cracks 0.009 in. and under:
    - Clean off the immediate area along the crack using a wire brush.
    - Clean the crack using compressed air of sufficient force so as to remove any undesirable materials.
    - Spray on a penetrant sealer all along the crack following the manufacturer recommendations. Sikagard 701W was used in this project (see Figure F.3.1-5 the manufacturer's specification sheet).
2. Web cracks 0.010 in. and up: Inject with epoxy as follows:
    - Clean off the immediate area along the crack using a wire brush.
    - Clean the crack using compressed air of sufficient force so as to remove any undesirable materials.
    - Install one surface mounted injection port for every 12 in. of crack on one side of the web. Use Prime Bond 3000 to mount the ports.

- Set up the injection tube manifold so as to inject sequentially through the ports allowing the air to vent sequentially out of the ports.
- Ensure to install the last port to be injected at the highest point of the crack.
- Surface seal the entire crack between all injection ports with Prime Gel 2000.
- Pressure-inject the crack following the injection equipment manufacturer's recommendations in conjunction with the epoxy manufacturer's recommendations. Prime Rez 1100 High Mod LV was used in this project (see Figure F.3.1-6 the manufacturer's specification sheet).
- Once the epoxy has thoroughly cured, remove all the ports and crack sealer.
- Finish the repair area so as to match the surrounding contours and texture.

A sample of the shop inspection reports is given in Figure F.3.1-7.

Sikagard® 701W

ISO 9000

Solvent-free concentrate of silicone emulsions

DESCRIPTION

Sikagard 701W is a solvent-free concentrate of silicone emulsions. When diluted the liquid forms a water and chloride-ion repellent impregnation specifically formulated to seal absorbent cementitious surfaces and other masonry substrates.

WHERE TO USE

- When diluted use Sikagard 701W as a colorless, non-vapor-barrier, water and chloride ion-repellent impregnation for absorbent materials.
- Treat concrete bridges, roadways, runways, parapet walls, precast, beams, columns, curbing, retaining walls, pavers, etc.
- Treat both new and existing structures.
- Treat masonry brickwork, stucco, etc.
- Porous architectural curtain-wall panels.
- Use on steel-reinforced structures to reduce the corrosion and latent damage potential of chlorides.

ADVANTAGES

Sikagard 701W is both an economical and simple-to-use sealer. Thanks to its unique ability to decrease water and chloride intrusion, Sikagard 701W helps reduce the danger of rebar corrosion. Sikagard 701W:

- Meets the standards of acceptability for concrete sealers established in NCHRP Report #244 at a 1:4 dilution.
- Enhances concrete integrity.
- Reduces efflorescence.
- Improves resistance to frost and deicing salts (chloride ion).
- Reduces dirt penetration.
- Does not act as a vapor barrier.
- May be applied to alkaline substrate.
- Will not degrade under UV exposure.

COVERAGE

100-250 sq.ft./gal., depending on porosity of substrate.
For proven results against chloride-ion intrusion, 125 sq.ft./gal. per coat is recommended.

PACKAGING

1-gal. pails, 4/case.

HOW TO USE

SURFACE PREPARATION

Before applying Sikagard 701W, be sure surface is clean and sound. The best impregnation is achieved on a dry, very absorbent substrate. Remove all grease, curing compounds, surface treatments, coatings, oils, etc.
Preparation work: Concrete and masonry surfaces - Blastclean, high pressure waterblast or use other approved mechanical means.

MIXING

Dilute Sikagard 701W concentrate with tap water in an appropriately sized mixing container. Mix with a low speed (400-600 rpm) drill with Sika paddle or comparable drum mixer until uniformly blended. For best results, Sikagard 701W should be used within 24 hours after blending with water.

APPLICATION

Apply by roller, brush (horizontal surfaces), or spray. Two coats of the diluted concentrate should be applied in a wet-on-wet fashion so as to completely saturate the surface. Preliminary site test application is recommended to determine effective coverage and performance. **Maximum water repellency will be realized in 72 hours.**

LIMITATIONS

- Adjacent surfaces such as window frames, glass, stainless steel, aluminum, etc., must be masked before application.
- Do not apply at temperature below 45F.
- Material is not intended for waterproofing under hydrostatic pressure.
- Do not apply through standing water.
- Material is not recommended for below-grade waterproofing.
- Material is not intended to seal visible cracks or crevices from moisture intrusion.
- Performance and penetration are dependant upon the concrete quality.
- Do not use on green concrete.
- **When overcoating:** an on-site adhesion test is recommended to determine actual compatibility.
- Sikagard 701W is not a carbonation barrier.

TYPICAL DATA FOR SIKAGARD 701W (Material and curing conditions @ 73F (23C) and 50% R.H.)	
SHELF LIFE	1 year in original, unopened containers (undiluted).
STORAGE CONDITIONS	Store dry at 45-95 F (4-35C) **Condition material to 65-75 F (18-24C) before using. Protect from freezing.**
COLOR	white/opaque liquid
MIX RATIO	1 gal: 4 gal. tap water yields 5 gals. of sealer
VISCOSITY	Approximately 5-20 cps.
% SOLIDS	50% (silicone content)
% NON VOLATILES (ASTM D5095) Active level 10%	% Solids 10
VOC.	193 g/l
FLASHPOINT	212F

NCHRP244 REPORT SERIES 2 TEST	
% Reduction in Water Absorption	85
% Water Vapor Transmission	100
% Reduction in Cl ion intrusion	84
Federal Spec SSW-110C (1:4 dilution) Water absorption, %	0.97

Figure F.3.1-5. Specification sheet of Sikgard 710W

PRIME RESINS

PRIME REZ 1100 HIGH MOD LV

DESCRIPTION:

PRIME REZ 1100 HIGH MOD LV is a two component, 100% solids, extra low viscosity injection resin designed to be injected into hairline cracks in concrete.

USES:

Injection of cracks in concrete, masonry, and wood.
Gravity feed of cracks in horizontal surfaces.

ADVANTAGES:

Extra Low Viscosity
High Strengths
Moisture Insensitive (may be injected underwater)
Excellent Bond Strengths
Good Chemical Resistance
USDA Approved

CONFORMS TO:

ASTM C-881
Types I, and II
Grade 1
Class B & C

PACKAGING:

1½ Gallon Units
3 Gallon Units
15 Gallon Units
16.5 ounce "Quick Mix" Cartridges

PHYSICAL PROPERTIES AT 77° F (25° C)

MIX RATIO A:B			2:1 by volume
VISCOSITY			140-160 c.p.s.
COLOR			AMBER (CLEAR)
POT LIFE	100 gram	1 gallon	20 mils
90° F (32° C)	15 min	8 min	1 hr 45 min
73° F (23° C)	29 min	22 min	8-12 hrs
50° F (10° C)	1 hr 12 min	41 min	10-20 hrs
COVERAGE			231 cubic inches per gallon

TEST DATA (STRENGTHS REPORTED IN P.S.I.)

COMPRESSIVE STRENGTH		ASTM D-695	8,540
COMPRESSIVE MOE		ASTM D-695	1.88×10^5
TENSILE STRENGTH		ASTM D-638	5,110
TENSILE MOE		ASTM D-638	2.39×10^5
BOND STRENGTH	2 DAY	ASTM C-882	2,627
	14 DAY	DRY	3,250
ELONGATION		ASTM D-638	6.4%
SHORE HARDNESS		D SCALE	85
WATER ABSORPTION		ASTM D-570	1.1%

Figure F.3.1-6. Specification sheet of Prime Rez 1100 High Mod LV

APPLICATION TECHNIQUES: See "Installation Procedures" in product binder for more detailed instructions.

MATERIAL CONDITIONING: Pre condition materials to 65°-85° F (19°-30° C) before using.

SURFACE PREPARATION: Surface must be clean and free of any dust, oil, grease, laitance, curing compounds, or any other contaminants. This should be achieved by sandblasting, waterblasting, or some other mechanical means.

MIXING CONSIDERATIONS: Pre mix each component. Measure exactly 2 parts "A" to 1 part "B" by volume into a clean pail. Only mix the amount of material that can be used within the pot life. Mix epoxy for three minutes using a low speed drill with a mixing paddle (never mix by hand). Scrape the sides and bottom of the pail while mixing.

Note: Large batches of epoxy will set up much faster than small batches.

INSTALLING MATERIAL:

Pressure Injection - Two component pumps or "Quick Mix" cartridges are recommended. Set porting system that is appropriate for injection equipment. Use Prime Gel 2000 or 2100 to surface seal the cracks. Always start at one end of the crack and work your way to the other end. Allow air to vent out of sequential injection ports. Cracks should remain pressurized after injection is completed.

Note: It is beneficial to flush cracks out with water to remove dust and contaminants before injecting epoxy. The water should be blown out by injecting oil free air into the injection ports.

Gravity Feed Cracks - Surface seal the bottom side of the structure with Prime Gel 2000 or 2100 if necessary. Route a vee-notch in the crack using a grinder with a masonry disc. Pour neat Prime Rez 1100 into the vee-notch. Continue until the crack is completely full.

LIMITATIONS: Do not use solvents to thin.
Minimum application temperature is 40° F (5° C).
Minimum age of concrete must be 21-28 days.
For injection of cracks over 1/4" wide, consult technical service department.

WARNINGS: "A" material may cause skin irritation. Contains epoxy resins.
"B" material may cause severe burns on skin. Contains amines.
Store material above 45° F.
DO NOT ALLOW PRODUCT TO FREEZE!

FIRST AID: ***Skin Contact*** - Wipe off contaminated area and wash with soap and water. ***Eye Contact*** - Immediately flush eyes with large amounts of water for 10 minutes. Get medical attention. ***Inhalation*** - Move to fresh air if symptoms occur. If breathing is difficult, get medical attention. ***Ingestion*** - If conscious give two glasses of milk or water. Get medical attention.

CLEAN UP: Clean equipment with MEK or Xylene immediately after use. Clean skin with soap and water. Wash contaminated clothing before re-use.

WARRANTY: Prime Resins warrants its products to be free from manufacturing defect and that they will meet the published characteristics when tested in accordance with ASTM and Prime Resins standards. No other warranties by Prime Resins are expressed or implied, including no warranty of merchantability or fitness for a particular purpose. Prime Resins will not be liable for damages of any sort resulting from any claimed breach of warranty.

If you have any questions about any of Prime Resins products or application techniques you may contact us directly at 800-321-7212 Monday through Friday 7:00 A.M. to 5:00 P.M. E.S.T.

Figure F.3.1-6(cont.). Specification Sheet of Prime Rez 1100 High Mod LV

STANDARD CONCRETE PRODUCTS, Inc

NON-CONFORMANCE REPORT No. VA-22-05

SCP JOB # 056525

PROJECT: RTE 33, KING WILLIAMS Co, VA

PROJECT # 0033-966-103

DATE CAST: 1-4-05 & 1-5-05.

DATE ISSUED:

FOREMAN: BALDEMAR

PREPOUR INSPECTOR: Q.C.

POSTPOUR INSPECTOR: Q.C.

PRODUCT	PIECE MARK
BT-95.5"	3-I.4, 3-I.5 & 3-I.7

DESCRIPTION OF NON-CONFORMANCE:

- WEB SPLITTING @ GIRDER ENDS.
- 2nd CASTING OF GIRDER TYPE WITH EXTRA STEEL AS DIRECTED TO INSTALL PER VA DOT (CELIK DEVILDIRIM & RODNEY) • BEA EXTRA 4-#4 OH STIRRUPS. EACH END.
- SEE ACCOMPANYING PHOTOS FOR ACTUAL CRACK LOCATIONS & SIZES.

SKETCH:

CRACKING RANGES FROM HAIRLINE TO 0.016" AT TIME OF DETENSIONING. CRACKS GREW TO ≥ 0.020" AS GIRDERS AGED.

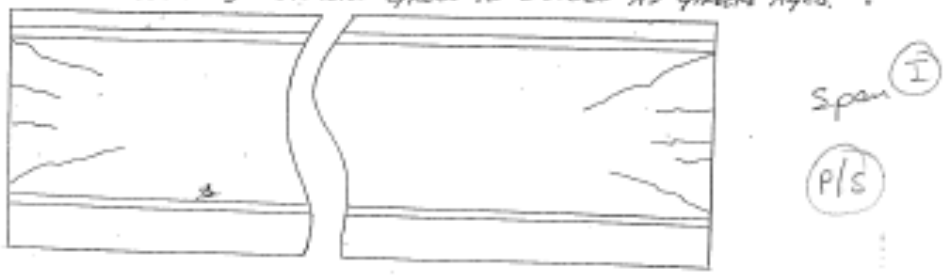

NOTE: ELEVATION VIEW

SKETCH REPRESENTS TYPE OF CRACKING AND NOT ACTUAL CRACKS.

DESCRIPTION OF REPAIR OR ACCEPTANCE REQUEST: ATT: Q.C., MIKE.

1. FLORIDA COASTAL CONSTRUCTION WILL INJECT ALL CRACKS.
2. CRACKS OVER 0.010" TO BE INJECTED WITH PRIME REZ 1100 EPOXY PER MANUFACTURERS RECOMMENDATIONS.
3. AFTER EPOXY HAS HARDENED, CLEAN UP REPAIR AREA SO AS TO MATCH SURROUNDING CONTOURS & TEXTURES.
4. SCP TO PAINT ALL CRACKS UNDER 0.010" WITH SIKAGARD 701W.

FINAL N.C.R. APPROVAL STATUS INSPECT & STAMP. DATE: 3-10-05 H

Figure F.3.1-7. Typical sample of the shop inspection reports

Inspection reports delivered by the district engineer:

The bridge was open to traffic in September 2006. The inspection report that was generated by the district engineer at that time stated that *hairline diagonal cracks exist in the web of Spans "j through q"* (see Figure F.3.1-8). However, the report did not provide any detailed information on the crack size, length or number.

Girders, Beams or Slabs (Diaphragms, Cross Frames, Bracing, etc.)	**Spans "J" through "Q"** - Hairline vertical & diagonal cracks in flanges & webs, typical but not limited to areas at or adjacent to closure pours and beam ends at piers **Spans "S", "T", & "U"** **Piers #19, #20, #21** - Hairline vertical crack in downstream bottom flange of Beam #7 at closure diaphragm **Span "U"** **Pier #20** - Hairline diagonal crack in downstream bottom flange of Beam #7 at closure diaphragm **Span "V"** **Pier #21** - Hairline vertical & diagonal crack in downstream bottom flange of Beam #7 at closure diaphragm

Figure F.3.1-8. Excerpt from the district inspection report

Bridge Inspection (see Figures F.3.1-9 to F.3.1-17):

The research team inspected the bridge on July 1, 2008. The research team inspected the exterior and first interior girders of following spans "i, k, l, n, s, and r". The research team was looking for signs of distress such as delamination (which was inspected by tapping with a hammer on the girder at the crack and its vicinity) and reinforcement corrosion.

Figure F.3.1-9. Span i, Exterior Girder, Left Hand Side: Web end zone cracking (0.010 in.), no efflorescence, no delamination, no signs of corrosion

Figure F.3.1-10. Span i, Exterior Girder, Right Hand Side: Web end zone cracking (0.010 in.), efflorescence, no delamination, no signs of corrosion

Figure F.3.1-11. Span i, Exterior Girder, Right Hand Side: Flange cracking (0.010 in.), no efflorescence, no delamination, no signs of corrosion

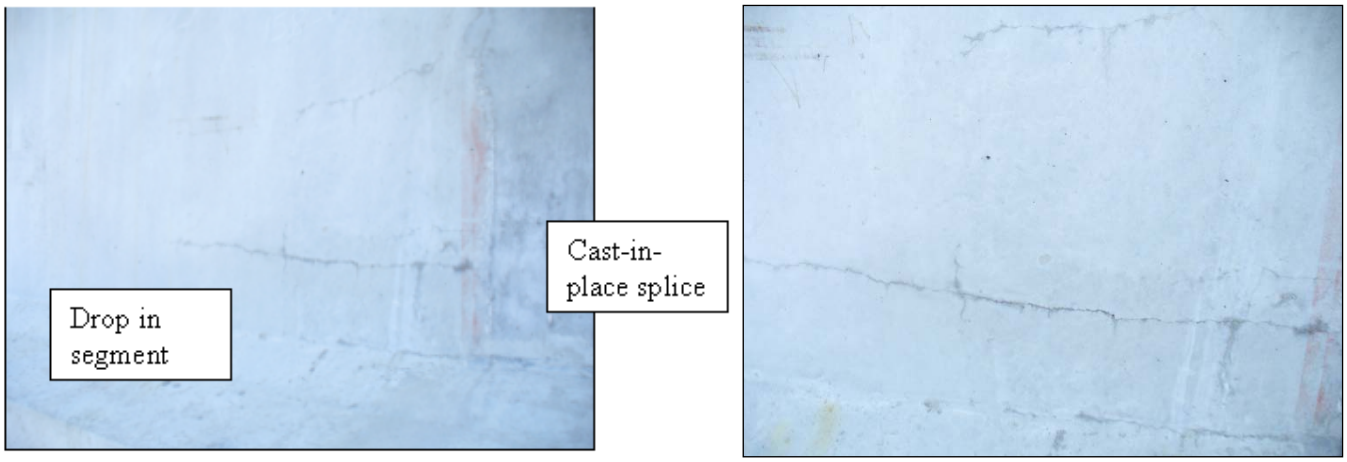

Figure F.3.1-12. Span k, Exterior Girder, Right Hand Side: Web end zone cracking (0.009 in.), no efflorescence, no delamination, no signs of corrosion

Figure F.3.1-13. Pier Segment at Pier 11 between Span k and l, Exterior Girder, Left Hand Side: Web end zone cracking (0.008 in.), no efflorescence, no delamination, no signs of corrosion

Figure F.3.1-14. Span n, Exterior Girder, Left Hand Side: Web end zone cracking (0.009 in.), no efflorescence, no delamination, no signs of corrosion

Figure F.3.1-15. Span r, First Interior Girder, Right Hand Side: Web end zone cracking (0.009 in.), some efflorescence, no delamination, some signs of corrosion

Figure F.3.1-16. Span s, Exterior Girder, Left Hand Side: Web end zone cracking (0.008 in.), no efflorescence, no delamination, no signs of corrosion

Figure F.3.1-17. Span s, First Interior Girder, Left Hand Side: Web end zone cracking (0.008 in.), some efflorescence, no delamination, no signs of corrosion

Conclusions:

End zone cracks are visible almost in all the girders on the bridge. The crack width ranges from 0.008 to 0.010 in.

Efflorescence can be seen around some of these cracks. The inspection engineer informed the research team that the efflorescence was reported at the time when the bridge was open to traffic in 2006, and based on his experience, the efflorescence did not increase with time.

No signs of reinforcement corrosion was reported, except in one girder in span "r".

No delamination was reported in the girders that were inspected.

F.3.2 Bridge on Rte. 33 over Pamunkey River

Figure F.3.2-1 shows the plan and elevation views of the bridge. The bridge consists of 49 spans as shown in Table F.3.2-1. The cross section of the bridge is shown in Figure F.3.2-2. Girders of all spans were made of lightweight concrete, 120 pcf, minimum concrete strength at release was 6 ksi and 8 ksi at 28-days. ½ in., 270 ksi, low relaxation pretensioned strands were used in all spans. Lightweight concrete, 120 pcf, was also used for the cast-in-place deck.

Figure F.3.2-3 shows the key plan for the post-tensioned spans, “gg” through “oo”, and Figure F.3.2-4 gives the details of the girder cross section for various spans.

Table F.3.2-1. Details of Bridge on Rte. 33 over Pamunkey River

Unit	Span	Type of reinforcement	Average span length	Girder depth	Cross section
Abutment “A”					
A	“a to f”	Pretensioned	6 spans @ 75 ft	45 in.	7 girders @ 10.5 ft
B	“g to l”	Pretensioned	6 spans @ 75 ft	45 in.	7 girders @ 10.5 ft
C	“m to r”	Pretensioned	6 spans @ 75 ft	45 in.	7 girders @ 10.5 ft
D	“s to x”	Pretensioned	6 spans @ 75 ft	45 in.	7 girders @ 10.5 ft
E	“y to cc”	Pretensioned	6 spans @ 90 ft	53 in.	7 girders @ 10.5 ft
F	“dd to ff”	Pretensioned	3 spans @ 136.33 ft	95.5 in.	7 girders @ 10.5 to 12.5 ft
Expansion joint					
G	“gg to jj”	Pretensioned/ post-tensioned	200, 240, 240, & 194.8 ft	95.5 in.	7 girders @ 10.5 to 12.5 ft
H	“kk”	Bascule span	248.33 ft	Steel	7 girders @ 10.5 to 12.5 ft
I	“ll to oo”	Pretensioned/ post-tensioned	194.8, 240, 240, & 200 ft	95.5 in.	7 girders @ 10.5 to 12.5 ft
Expansion joint					
J	“pp to ss”	Pretensioned	91, 108, 108, & 95 ft	95.5 in.	8 girders @ 9.5 to 11.0 ft
K	“tt to ww”	Pretensioned	75, 75, 75 & 70 ft	45 in.	8 girders @ 9.5 to 11.0 ft
Abutment “B”					

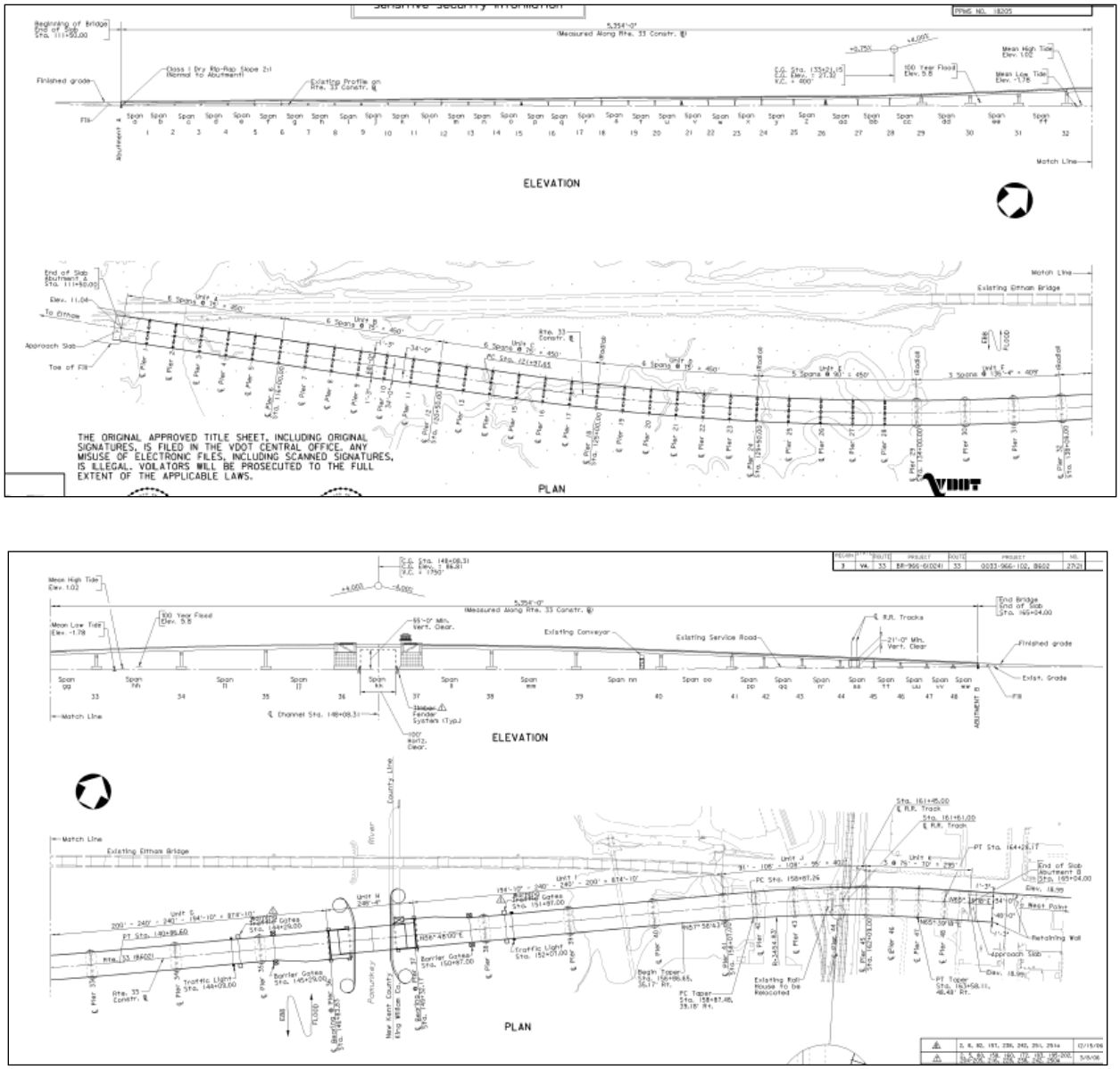

Figure F.3.2-1. Plan and elevation views of the bridge

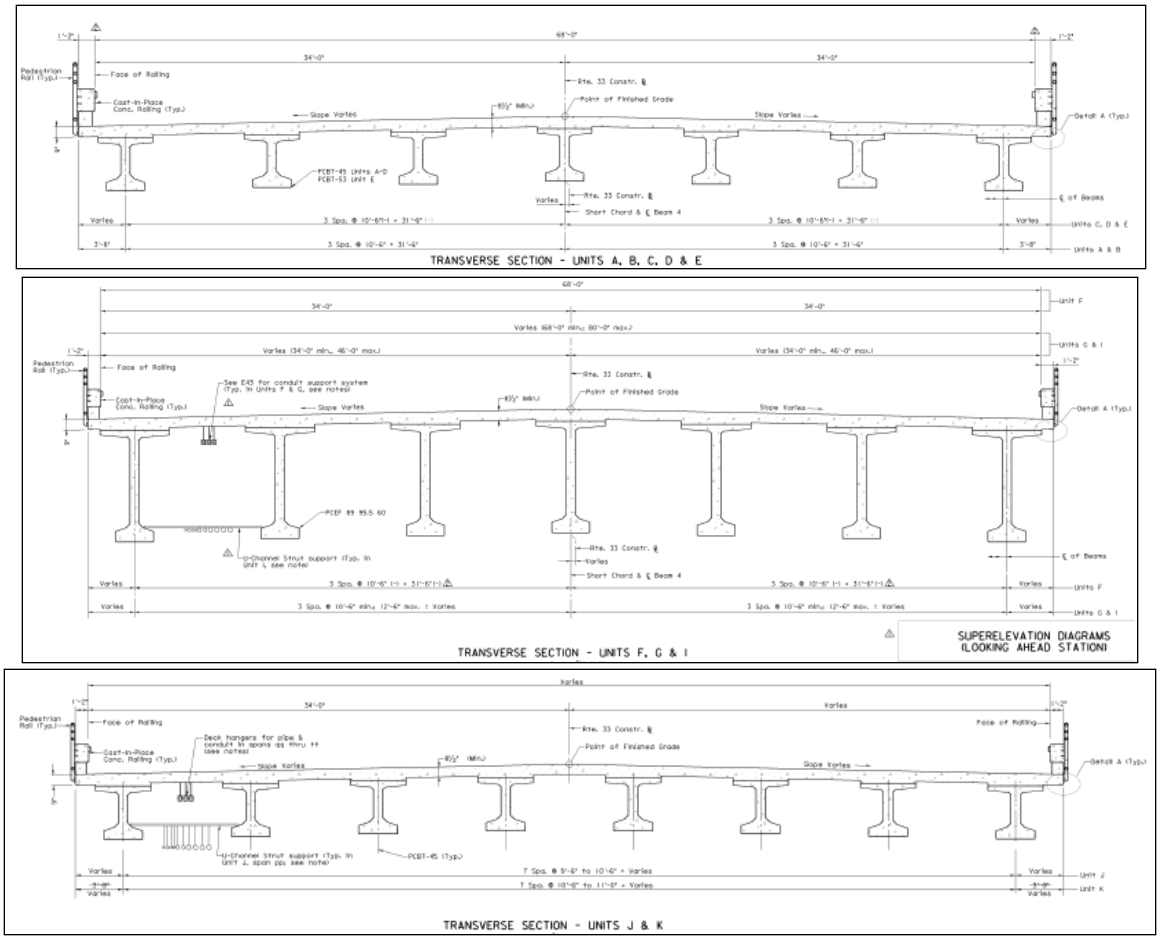

Figure F.3.2-2. Cross sections of the bridge

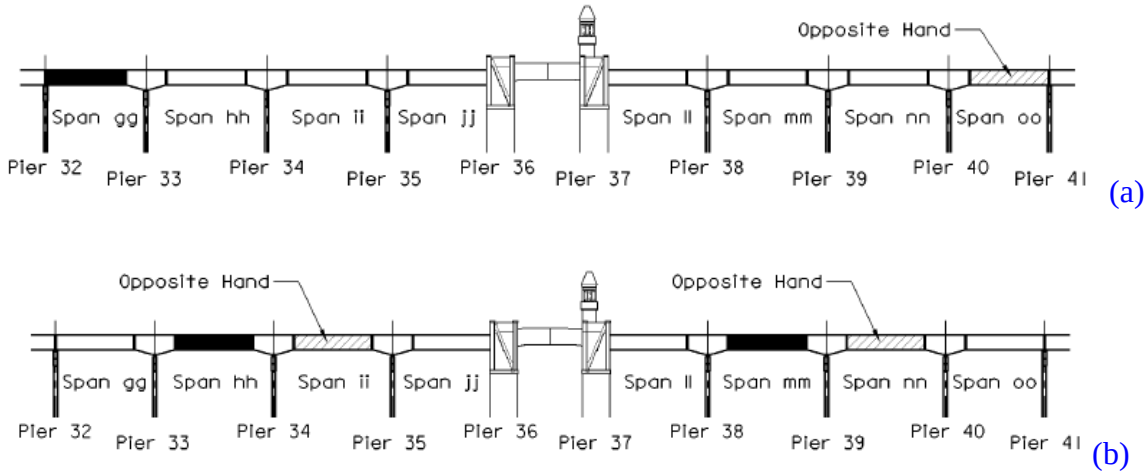

Figure F.3.2-3. Key plan of the post-tensioned spans: (a) End segments, (b) Drop-in segments

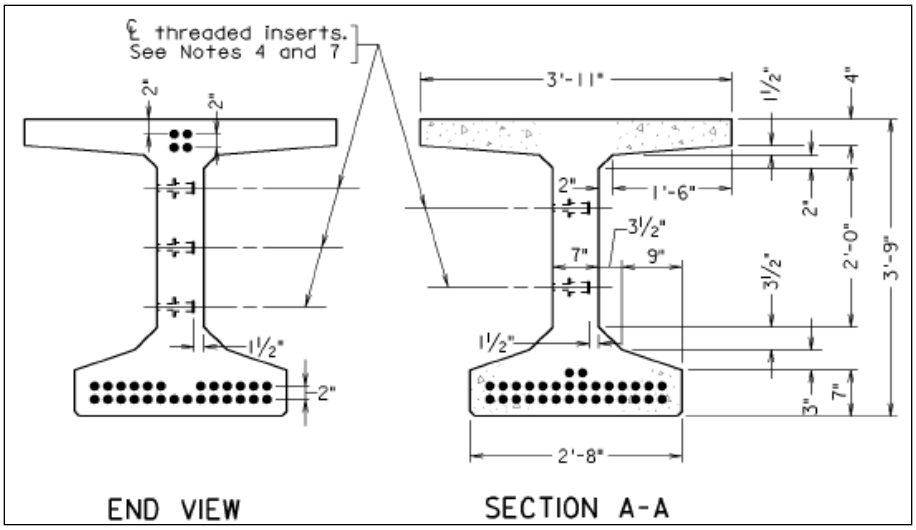

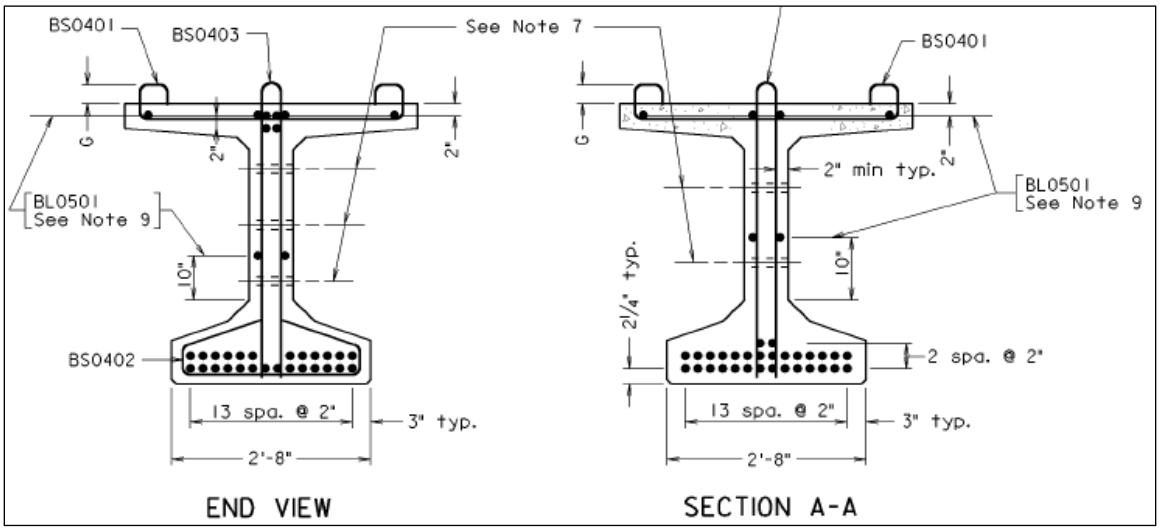

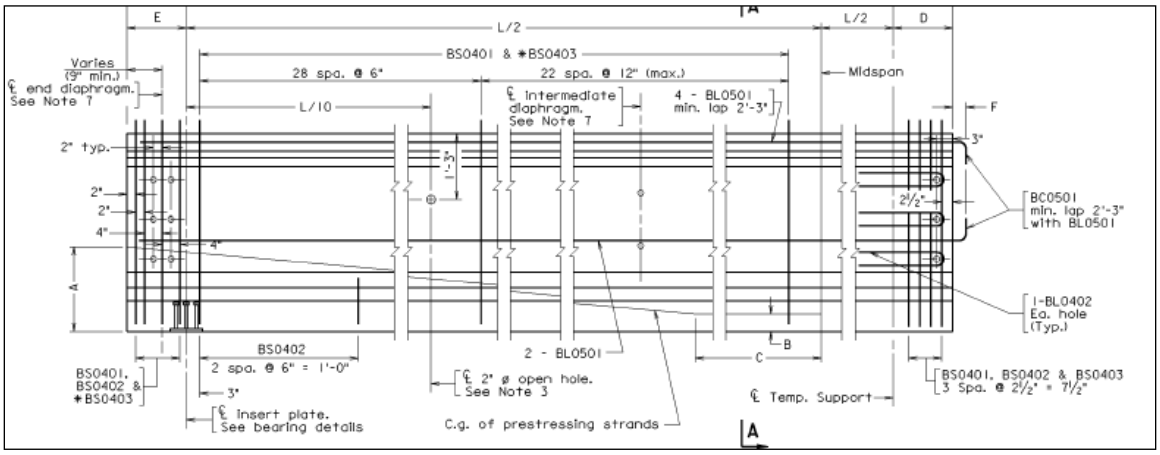

Figure F.3.2-4. Details of the girders of Units "A to D and K"

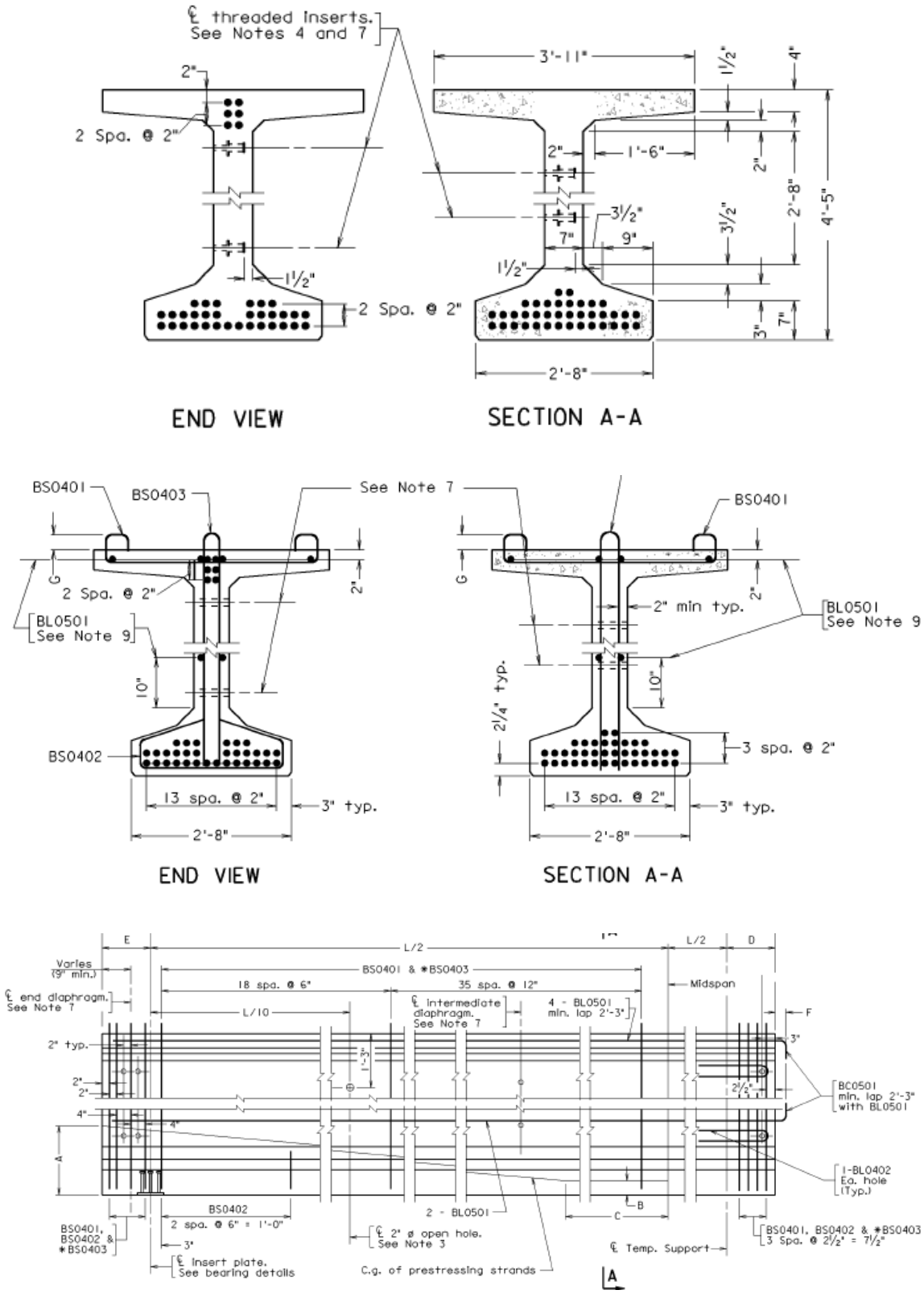

Figure F.3.2-4(cont.). Details of the girders of Units "E and J"

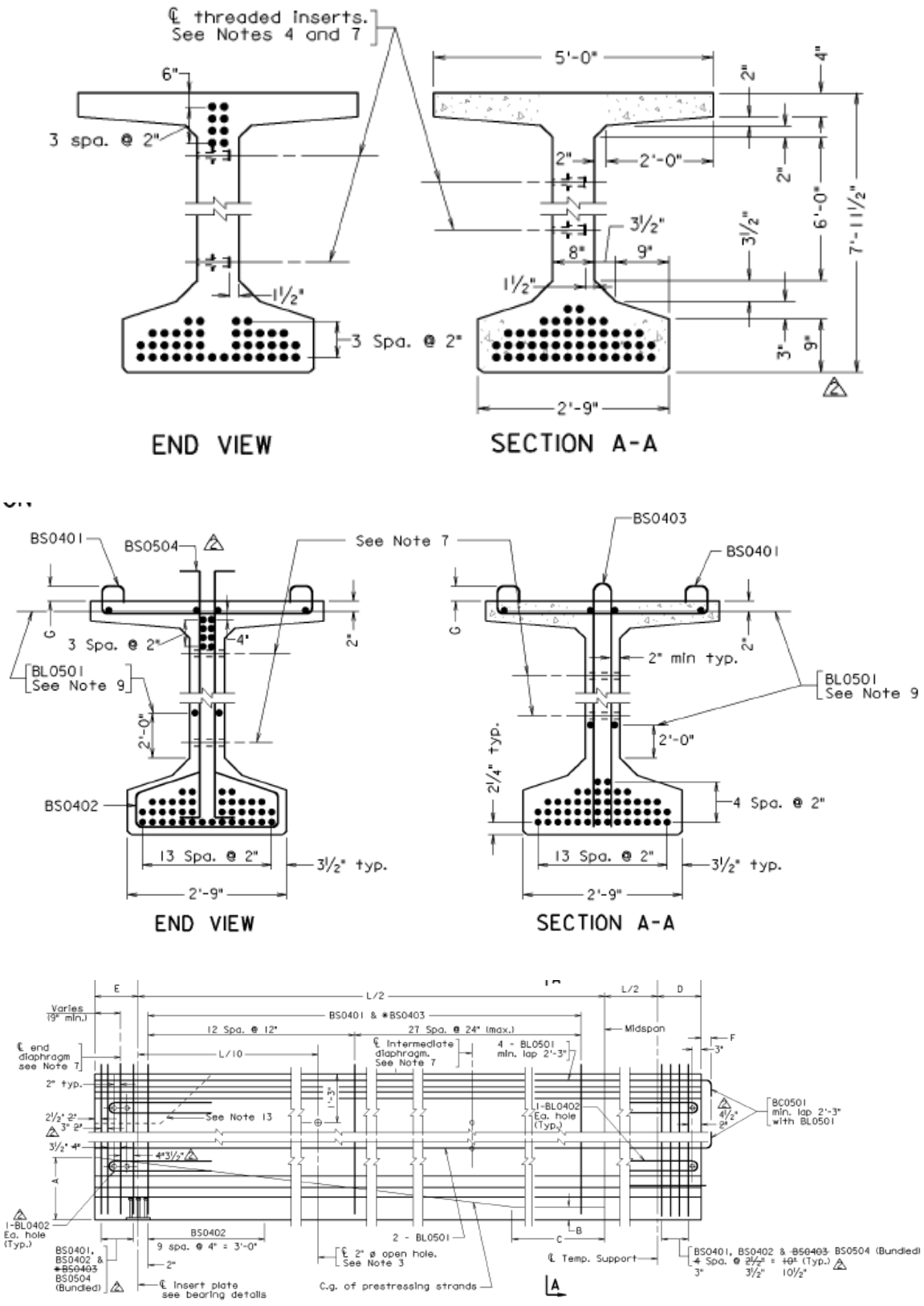

Figure F.3.2-4(cont.). Details of the girders of Units "F"

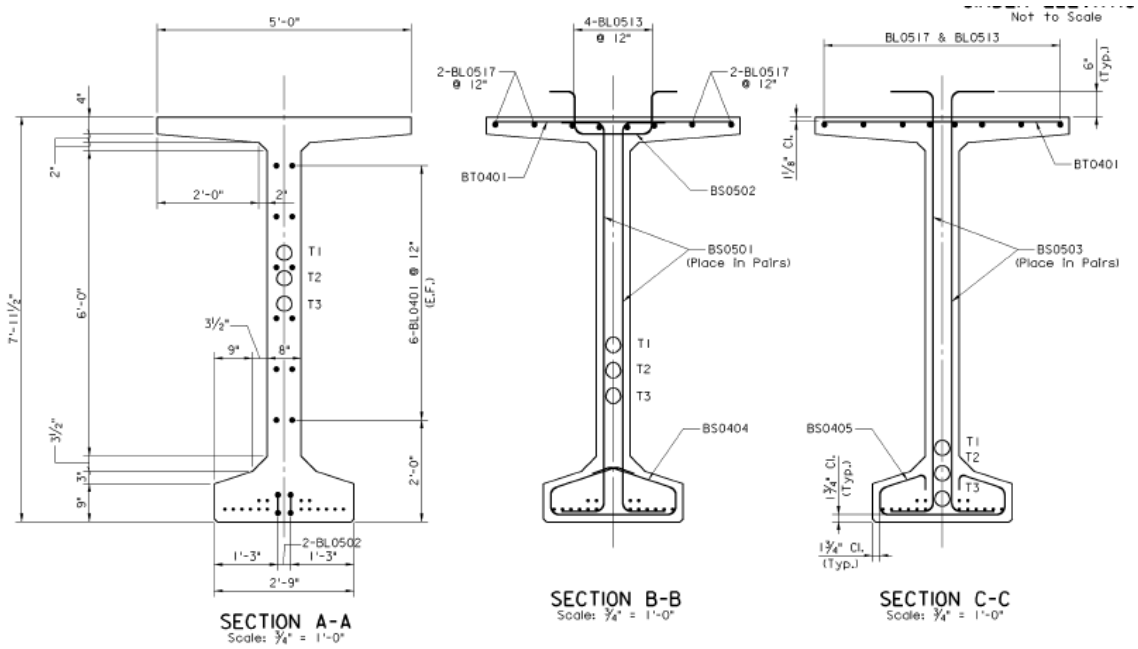

End segment

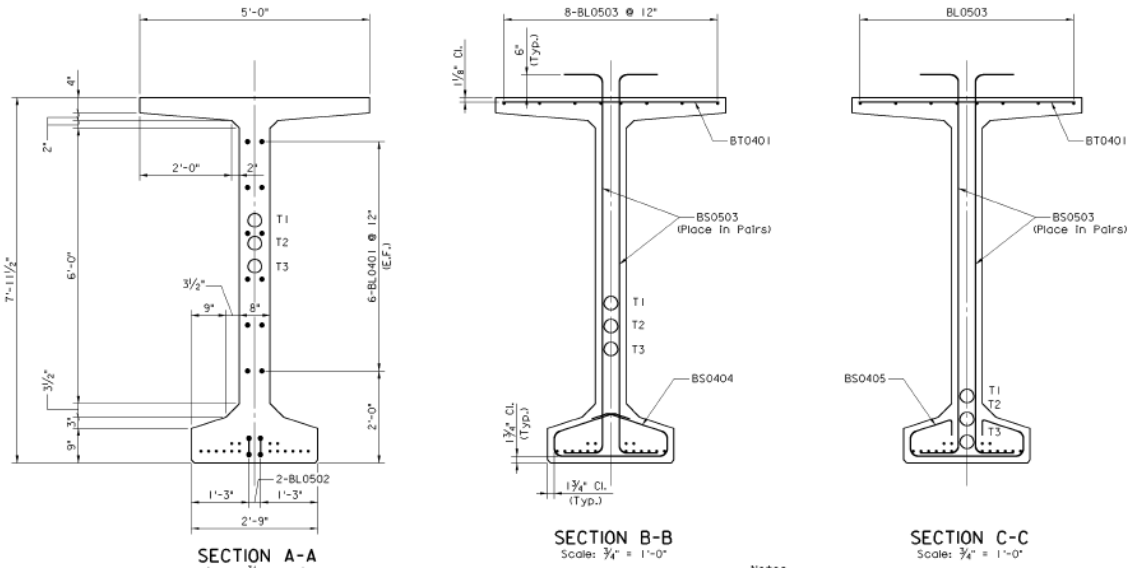

Drop-in segment

Figure F.3.2-4(cont.). Details of the girders of Units “G and I”

Shop inspection reports:

The research team contacted the precast producer and asked for the shop inspection reports. The precast producer responded that the shop inspection reports are not available and advised the research team to check with VDOT. VDOT responded that there are no shop inspection reports available.

Inspection reports delivered by the district engineer:

The bridge was open to traffic in late 2007. The inspection report that was generated by the district engineer at that time stated that *hairline diagonal cracks exist in the web of Spans "j through q"* (see Figure F.3.2-5). However, the report did not provide any detailed information on the crack size, length or number.

Girders, Beams or Slabs (Diaphragms, Cross Frames, Bracing, etc.)	**Pre-stressed Concrete Beams – Units "A, B, C, D, E, F, G, I, J & K"** - Hairline vertical & diagonal cracks in flanges and webs, typical but not limited to areas at or adjacent to closure pours and girder ends at piers

Figure F.3.2-5. Excerpt from the district inspection report

Bridge Inspection (see Figures F.3.2-6 to Figure F.3.2-11):

The research team inspected the bridge on July 1, 2008. The research team inspected the exterior and first interior girders of following spans: "oo" in unit "I", "pp and qq" in unit "J" and "tt, uu & ww" in unit "K". The research team was looking for signs of distress such as delamination (which was inspected by tapping with a hammer on the girder at the crack and its vicinity) and reinforcement corrosion.

Figure F.3.2-6. Span “oo”, Exterior Girder, Right Hand Side: Web end zone cracking (0.008 in.), no efflorescence, no delamination, no signs of corrosion

Figure F.3.2-7. Span “pp”, Exterior Girder, Left Hand Side: Web end zone cracking (0.008 in.), no efflorescence, no delamination, no signs of corrosion

Figure F.3.2-8. Span “qq”, Interior Girder, Left Hand Side: Web end zone cracking (0.010 in.), no efflorescence, no delamination, no signs of corrosion

Figure F.3.2-9. Span “tt”, Exterior Girder, Right Hand Side: Web end zone cracking (0.010 in.), no efflorescence, no delamination, no signs of corrosion

Figure F.3.2-10. Span “uu”, Exterior Girder, Leftt Hand Side: Web end zone cracking (0.008 in.), no efflorescence, no delamination, no signs of corrosion

Figure F.3.2-11. Span “vv”, Exterior Girder, Left Hand Side: Web end zone cracking (0.008 in.), no efflorescence, no delamination, no signs of corrosion

Conclusion:

End zone cracks are visible in many exterior and interior girders on the bridge. The crack width ranges from 0.008 to 0.010 in.

No efflorescence was reported in the inspected girders.

No signs of reinforcement corrosion was reported.

No delamination was reported in the girders that were inspected.

F.3.3 Bridge on Rte 614, Gloucester County

The third bridge is located on Rte 614 (Hickory Fork Raod) over Carter's Creek, 1.6 miles west of Rte 17, in Gloucester Co. The bridge consists of 6 spans (82.5 ft each) with one expansion joint at the center pier. The cross section of the bridge consists of six girders at 7 ft- 4 in., which support 8-in. thick cast-in-place concrete slab, as shown in Figure F.3.3-1. All the girders are AASHTO Type IV, 54 in. deep, as shown in Figure F.3.2.2(C)-2. The bridge is constructed over a marshland with very low clearance of 13 to 16 ft, as shown in Figures F.3.2.2(C)-3 to F.3.2.2(C)-5.

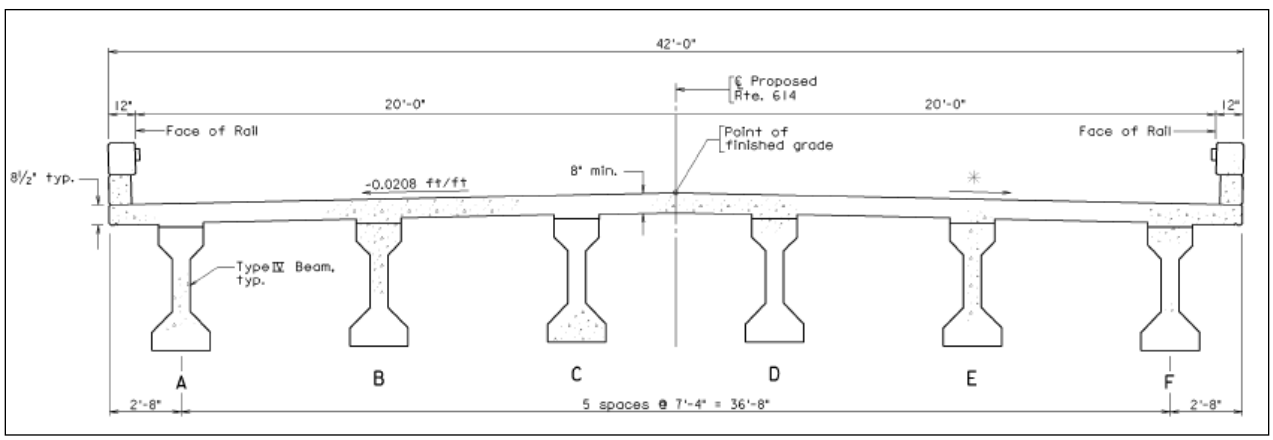

Figure F.3.3-1. Cross section of the bridge

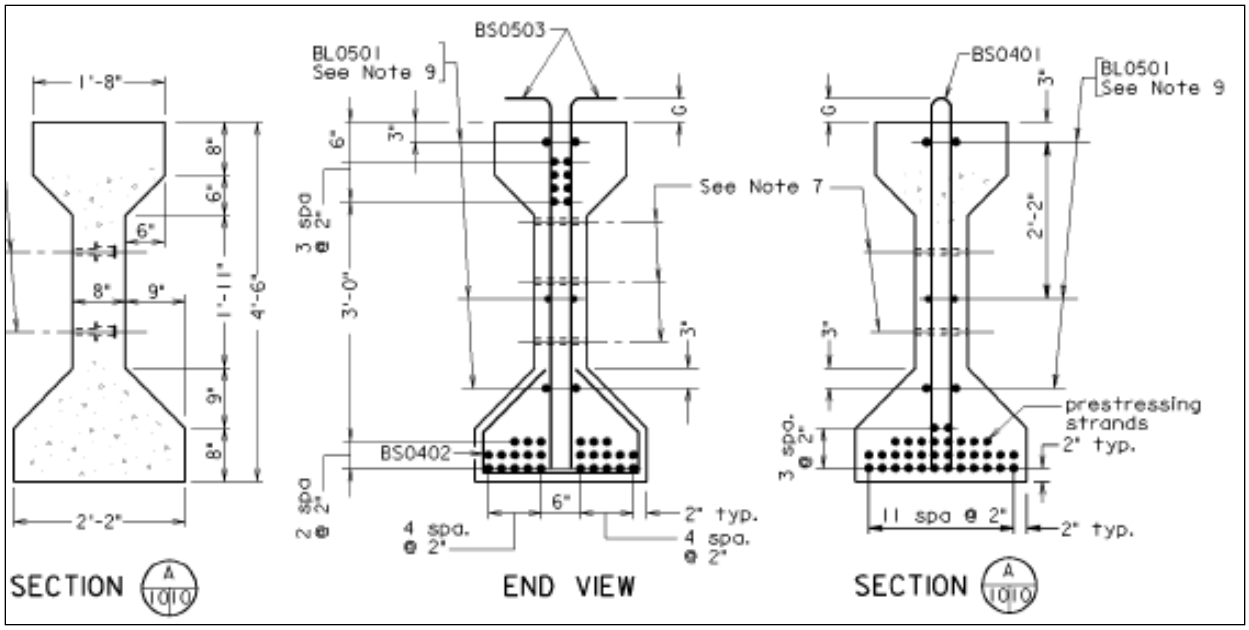

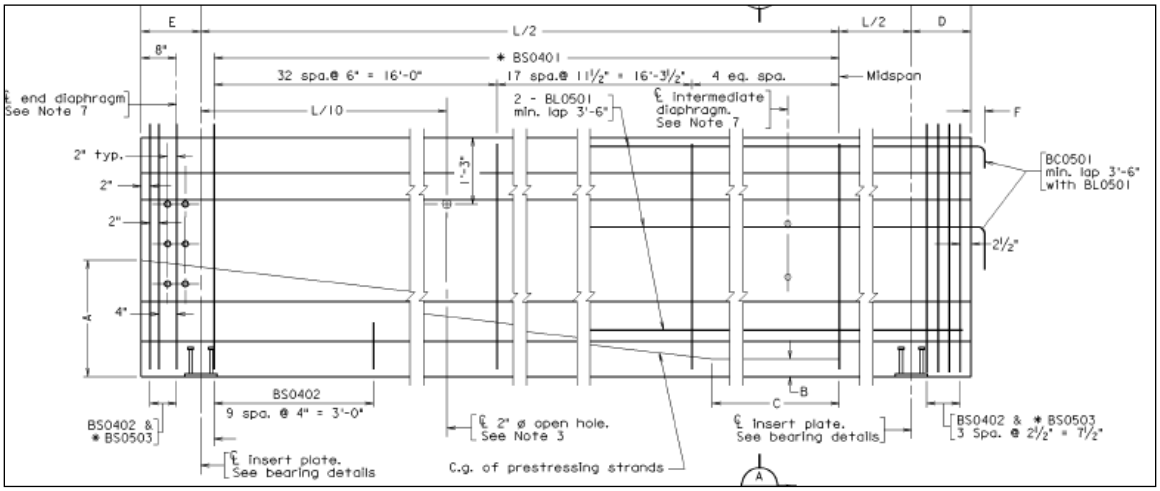

Figure F.3.3-2. Details of the prestressed concrete girders

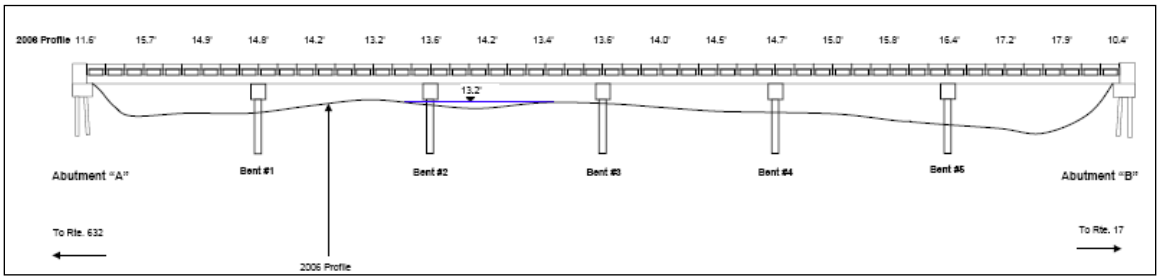

Figure F.3.3-3. Longitudinal profile of the bridge

Figure F.3.3-4. View at Bent #4 showing the low clearance

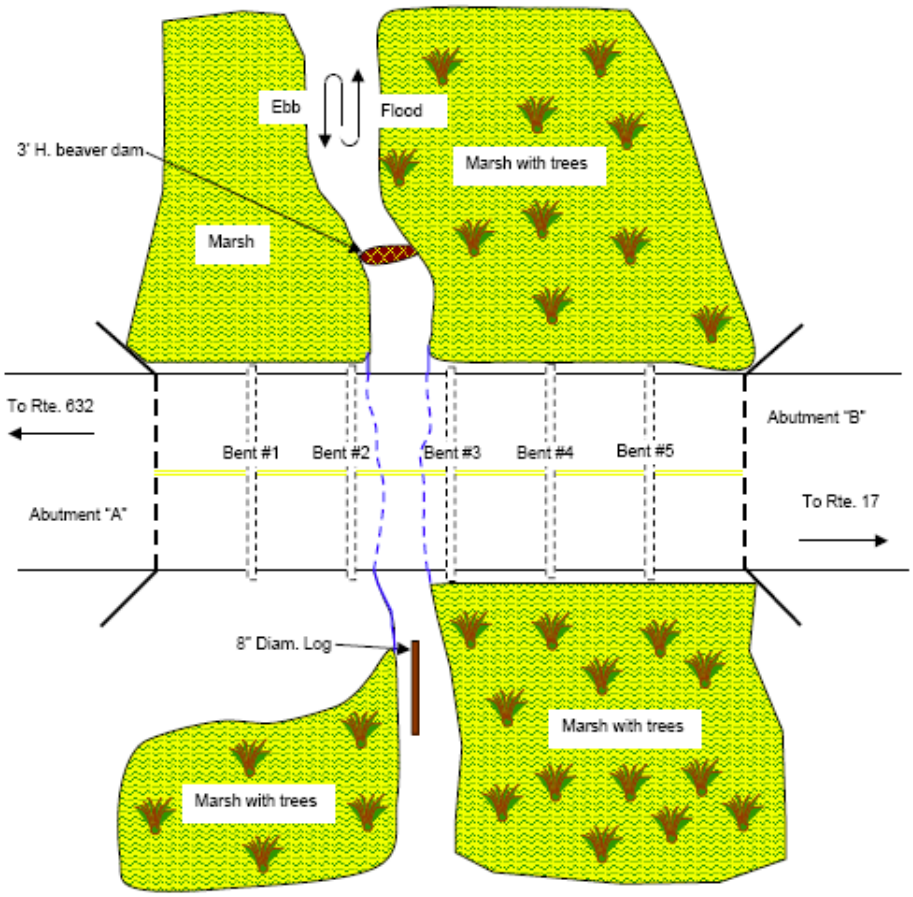

Figure F.3.3-5. Schematic plan of the bridge showing the surrounding environment

Shop Inspection Reports

The prestressed concrete girders were manufactured by Bayshore Concrete Products Co., VA. The research team asked the company to provide a copy of the shop inspection reports. The company responded that the reports were moved to a save storage area and hard to be retrieved.

District Inspection reports

The bridge was open to traffic in 2006. The first inspection that was conducted on 07/30/2008 reported that hairline cracks exist in almost every girder on the bridge, as shown in Figure F.3.3-6. However, the report does not provide any details on the cracks such as number, length, width, etc.

SUPERSTRUCTURE Bearings Devices	No noteworthy deficiencies
Girders, Beams or Slabs (Diaphragms, Cross Frames, Bracing, etc.)	- Several beams, at closure diaphragms, webs have hairline diagonal cracks, some with chemical stains, cracks begin at the top of web at closure diaphragms & extend to the top of the bottom flange

Figure F.3.3-6. Excerpts from the district inspection report

Bridge Inspection (see Figures F.3.3-7 to F.3.3-11):

Due to the low clearance of the bridge, the research team could not use the *Aspen Aerial, UP60*, truck to inspect the girder. Inspection was done by walking under the bridge and using ladders. Also, due to the muddy nature of the marshland that made it extremely difficult to move under the bridge, the research team inspected only the first three spans next to Abutment B (spans 4, 5 and 6). The inspection was conducted on August 14, 2008. The weather in area has very high humidity most of the time during summer. The research team noticed that traffic volume on the bridge is low.

The research team was able to inspect all the girders on the three spans. The research team was looking for signs of distress such as delamination (which was inspected by tapping with a hammer on the girder at the crack and its vicinity) and reinforcement corrosion. It was evident that all the girders have almost identical pattern of end zone cracking. At each end of the girders, one end zone crack is formed, where it extends from the top of the flange and the member end to the top surface of the bottom flange. It was evident that efflorescence does exist on about 75 percent of the cracks. Upon inspection, the concrete at the crack and in its vicinity looked very sound with no signs of delamination or reinforcement corrosion. The size of the crack ranges from 0.006 to about 0.009 in., with the majority of the cracks around 0.008 in. The end zone cracks extend for about 30 in. from face of the member end. No signs of shop repair could be detected by the research team. The following pictures show some of these cracks.

Figure F.3.3-7. End zone crack, Span 5, left hand side, exterior girder, 0.006 to 0.008 in. wide, with efflorescence, no delamination, no reinforcement corrosion

Figure F.3.3-8. End zone crack, Span 5, left hand side, second interior girder, 0.009 in. wide, with efflorescence, no delamination, no reinforcement corrosion

Figure F.3.3-9. End zone crack, Span 4, right hand side, exterior girder, 0.007 in. wide, with some efflorescence, no delamination, no reinforcement corrosion

Figure F.3.3-10. End zone crack, Span 4, right hand side, first interior girder, 0.007 in. wide, with some efflorescence, no delamination, no reinforcement corrosion

The research team noticed that all girders were made flush (no embedment) with the cast-in-place diaphragm, as shown in Figure F.3.3-11.

Figure F.3.3-11. Prestressed girders have no embedment in the diaphragm

Conclusion:

Although end zone cracking exists in almost all girders of the bridge, none of the cracks on the three spans that were inspected showed any signs of delamination or reinforcement corrosion.