APPENDIX A SUMMARY SHEETS OF BAR COUPLER CONNECTIONS

APPENDIX A SUMMARY SHEETS OF BAR COUPLER CONNECTIONS

Location:	Column to cap beam	**Type:**	Bar Couplers: Grouted splice sleeves to connect precast column to precast cap beam, ED
Title:	Connection BC-1 FHWA Connection Manual – 3.1.1.2.D	**TRL:**	Maximum TRL: 8 TRL Gaps: 4, 5, 6
Source:	Utah DOT		

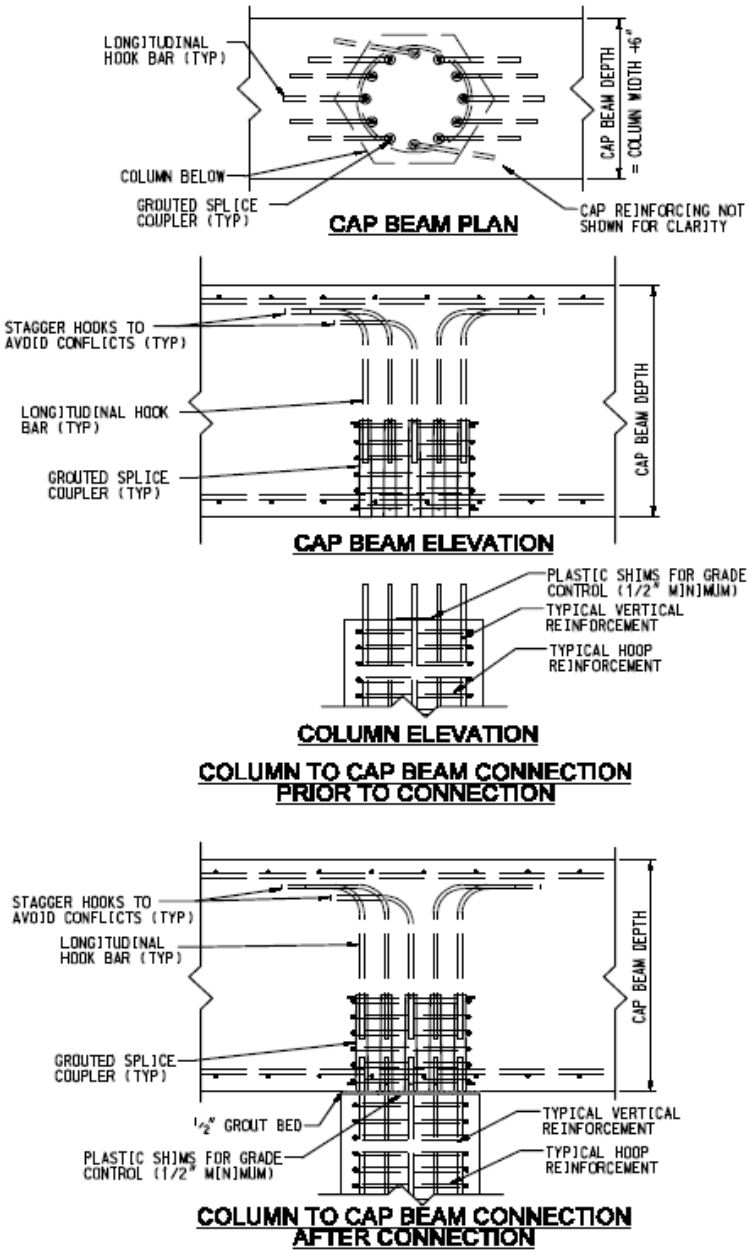

BACKGROUND

Title: **Connection BC-1** (FHWA Connection Manual – 3.1.1.2.D)

History / Description:

- Reinforcing bars extending from the precast column are grouted into splice couplers embedded in the precast cap beam.
- The connection has been built in Utah as part of their standard precast substructure details.

References:

- Culmo (2009)
- Utah DOT Precast Substructure Elements Manual (2010)
- Utah DOT Precast Piers and Footings (2009)
- Splice Sleeve Japan Ltd. (Undated)
- Paulson (1991)

Contact Information:

- Michael P. Culmo P.E. (CME Associates) – culmo@cmeengineering.com

EVALUATION

Constructability:
Risk Value: -1

- A grout bed using non-shrink grout is prepared before cap beam is lowered.
- Utah DOT suggests using matching templates and precast plant initial dry fit up to assure tolerances have been met for projecting bars and splice couplers.
-

Seismic Performance:
Value: -1

- Should behave similarly to CIP connection
- Does not orient the hooks of the embedded bars in the correct directions for good joint shear performance
- Shows promise for seismic use. Needs to be tested for cyclic lateral loading.
- With coupler embedded in cap beam, there is reduced strain penetration in the cap beam.

Inspectability:
Value: 0

- Inspectability post-earthquake is the same as for CIP construction.

Durability:
Value: 0

- Durability is similar to that of CIP concrete.

Time Saving Potential:
Value: +2

- Precast cap beam saves considerable time over CIP cap beam.

TRL Comments:

-

Additional Comments:

- A similar connection concept using grouted splice couplers is proposed for connecting segments of columns.

Location:	Column to cap beam	**Type:**	Bar Couplers: Grouted splice sleeves to connect precast column to precast cap beam, DE
Title:	Connection BC-2 Pinned Connection	**TRL:**	Maximum TRL: 8 TRL Gaps: 4, 5, 6
Source:	Utah DOT		

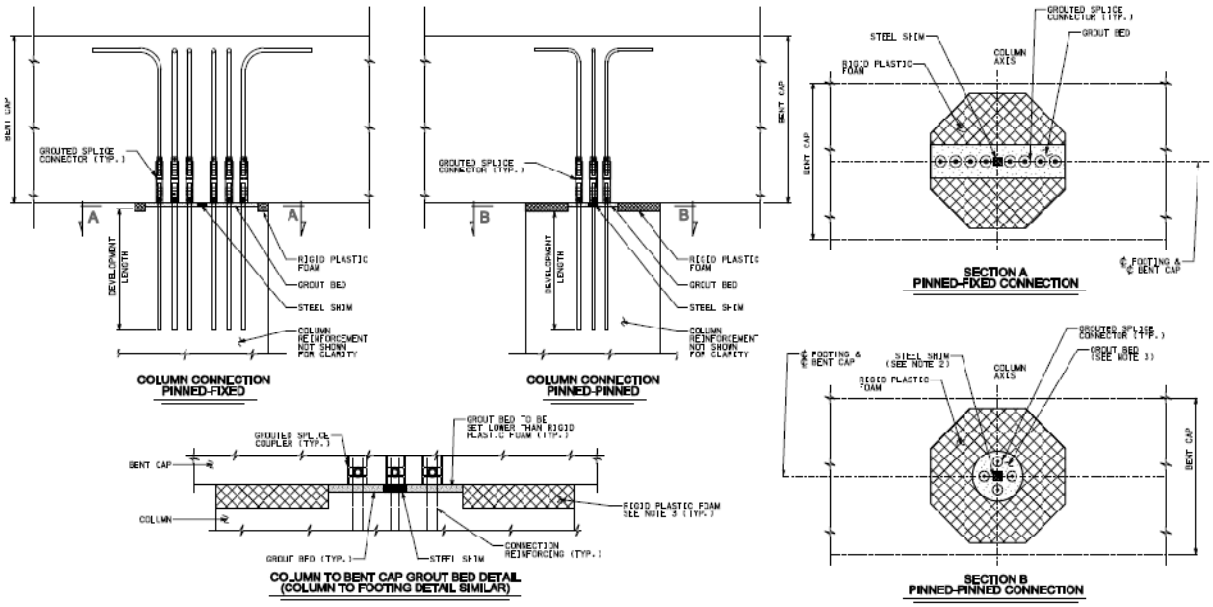

BACKGROUND

Title: **Connection BC-2** (Pinned Connection)

History / Description:

- Reinforcing bars extending from the column are grouted into splice sleeves embedded in the cap beam. Bar configurations for a pin in one or two directions are shown. Rigid foam is provided adjacent to the connection bars.
- The connection has been built in Utah as part of their standard precast substructure details.

References:

- Utah DOT Precast Substructure Elements Manual (2010)
- Utah DOT Precast Piers and Footings (2009)
- Splice Sleeve Japan Ltd. (Undated)
- Paulson (1991)

Contact Information:

- Utah DOT

EVALUATION

Constructability:
Risk Value: -1

- A grout bed using non-shrink grout is prepared before cap beam is lowered. Utah DOT suggests using matching templates and precast plant initial dry fit up to assure tolerances have been met for projecting bars and splice couplers.

Seismic Performance:
Value: -1

- Shows promise for seismic use. Needs to be tested for cyclic lateral loading.
- Detail could be useful for short columns to reduce the amount of load they attract.
- Need spiral reinforcement to help with bar buckling at connection interface.
- Rigid foam between the cap beam and column provides less resistance to connection rotation than concrete, allowing more rotational deformation in a seismic event.

Inspectability:
Value: 0

- Damage assessment post-earthquake will require dismantling a portion of the connection.

Durability:
Value: 0

- Durability is similar to that of CIP concrete.

Time Saving Potential:
Value: +2

- Precast cap beam saves considerable time over CIP cap beam.

TRL Comments:

-

Additional Comments:

- Could use pressure grouted corrugated steel ducts to top of cap beam in place of grouted splice couplers.

Location:	Column to foundation	**Type:**	Bar Couplers: Grouted splice sleeves to connect precast column to Footing, ED
Title:	Connection BC-3 FHWA Connection Manual – 3.1.4.2.B	**TRL:**	Maximum TRL: 8 TRL Gaps: 4, 5, 6
Source:	Utah DOT		

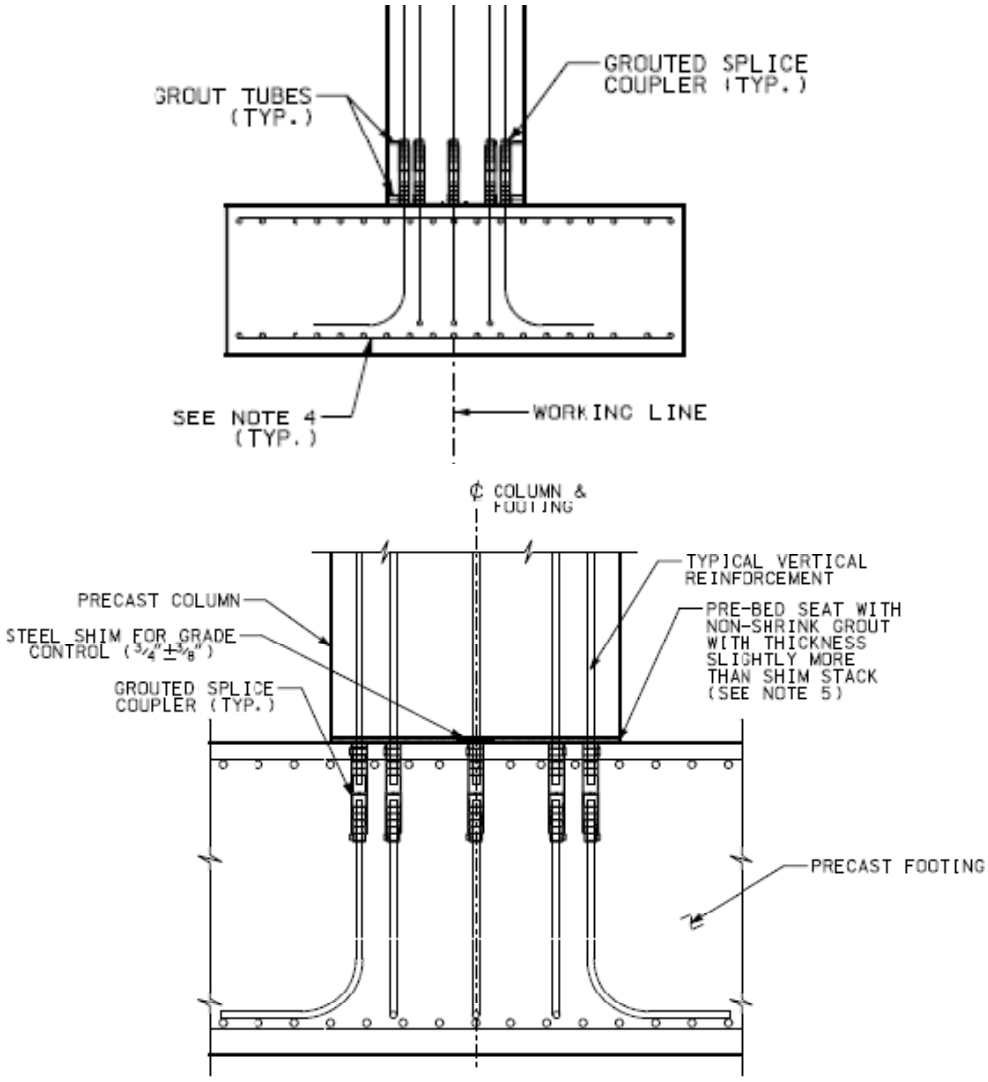

OPTIONAL PRECAST COLUMN TO FOOTING CONNECTION

SEE NOTE 4

BACKGROUND

Title: **Connection BC-3** (FHWA Connection Manual – 3.1.4.2.B)

History / Description:

- Two connection options are presented: Reinforcing bars extending from the footing are grouted into splice sleeves embedded in the column; or bars extending from the column are grouted into splice sleeves embedded in the footing.
- The connections have been built in Utah as part of Utah DOT standard precast substructure details.

References:

- FHWA Connection Manual – 3.1.4.2.B (Culmo 2009)
- Utah DOT Precast Substructure Elements Manual (2010)
- Utah DOT Precast Piers and Footings (2009)
- Splice Sleeve Japan Ltd. (Undated)
- Paulson (1991)

Contact Information:

- Michael P. Culmo P.E. (CME Associates) – culmo@cmeengineering.com

EVALUATION

Constructability:
Risk Value: -1

- A grout bed using non-shrink grout is prepared before column is lowered.
- Utah DOT suggests using matching templates and precast plant initial dry fit up to ensure tolerances have been met for projecting bars and splice couplers.
- Couplers must be sealed for placement in the footing to eliminate debris contamination, and grouting inlet and outlet vents are above the footing surface.

Seismic Performance:
Value: -1

- Shows promise for seismic use. Components and subassemblies need to be tested for cyclic lateral loading.
- Should behave similarly to CIP connection.
- Does not orient the hooks of the embedded bars in the correct directions for good joint shear performance
- Couplers in footing option – With coupler embedded in footing, there is reduced strain penetration in the footing.
- Couplers in column option - Couplers will cause inelastic deformation to be concentrated in the column, leading to greater potential for bar buckling, unless adequate spirals are provided.
- All splices located at one level – code issue

Inspectability:
Value: 0

- Inspectability post-earthquake is the same as for CIP construction.

Durability:
Value: 0

- Durability is similar to that of CIP concrete.

Time Saving Potential:
Value: +1

- Precast columns can save time over CIP columns.

Location:	Column to cap beam	**Type:**	Bar Couplers: Grouted splice sleeves to connect precast column to precast cap beam, ED
Title:	Connection BC-4 FHWA Connection Manual – 3.1.1.2.A	**TRL:**	Maximum TRL: 3 TRL Gaps: None
Source:	Florida DOT		

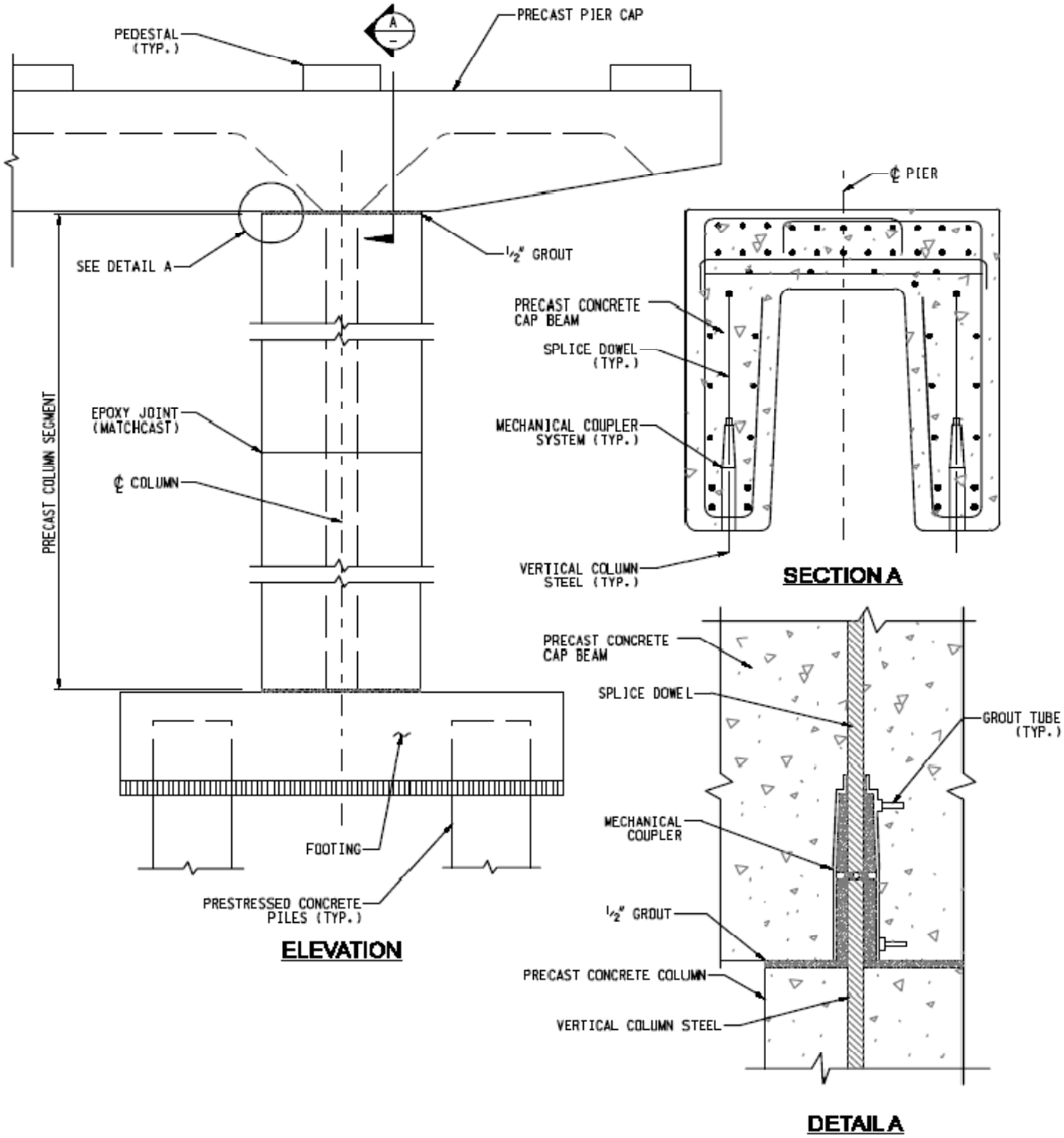

BACKGROUND

Title: **Connection BC-4** (FHWA Connection Manual – 3.1.1.2.A)

History / Description:

- Reinforcing bars extending from the column are grouted into splice sleeves embedded in the cap beam.
- The cap beam is u-shaped to reduce weight. The column is H-shaped.
- The connection was used on the Edison Bridge in Ft. Myers, Florida.

References:

- Culmo (2009)
- http://www.splicesleeve.com/PDF/CDS-Edison.pdf

Contact Information:

- Thomas Andres (Florida DOT) – thomas.andres@dot.state.fl.us

EVALUATION

Constructability:
Risk Value: -1

- Projecting bars need to be placed and aligned accurately.
- Difficult to align four column bars in mechanical couplers for multiple columns. Measurements as columns are placed and matching templates for column and cap beam are critical.
- Difficult to assure that grout pads uniformly support cap beam.
- Not clear if column vertical bars cross the match cast column segment interface at mid-height of column and how this joint is constructed.

Seismic Performance:
Value: -1

- Column and cap beam shape is poor for seismic regions.
- Not recommended for moderate to high seismic regions.
- Poor energy dissipation device.
- Connection configuration could experience loss of cover and local buckling at bars connecting to couplers.
- Recommend testing for cyclic lateral loads.

Inspectability:
Value: 0

- Inspectability post-earthquake is the same as for CIP construction.

Durability:
Value: 0

- Durability is similar to that of CIP concrete.

Time Saving Potential:
Value: +2

- Precast cap beam and precast column save considerable time over CIP elements.

TRL Comments:

-

Additional Comments:

-

Location:	Column to foundation and cap beam	**Type:**	Bar Coupler: Grouted splice sleeves to connect p/c column to footing or p/c column to p/c cap beam, ED
Title:	Connection BC-5 Alabama Splice Sleeve	**TRL:**	Maximum TRL: 1 TRL Gaps: None
Source:	University of Alabama		

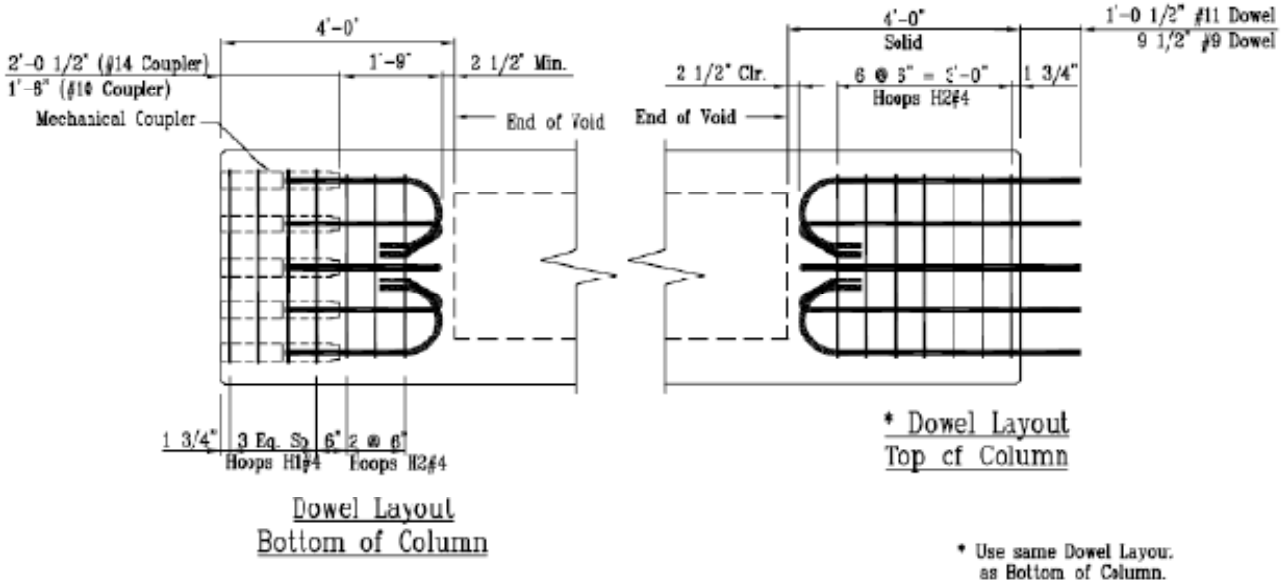

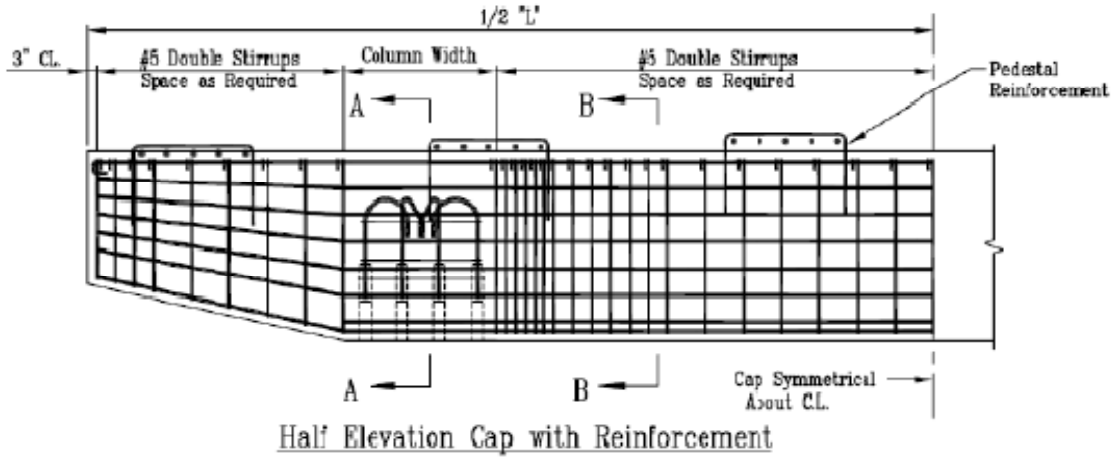

Half Elevation Cap with Reinforcement

BACKGROUND

Title: **Connection BC-5** (Alabama Grouted Splice Sleeve)

History / Description:

- Reinforcing bars extending from the footing are grouted into splice sleeves embedded in the bottom of the column. The top end of the column has column bars extending and grouted into splice sleeves embedded in the cap beam.
- The connection design was the result of a study and report by the University of Alabama aimed at developing a precast concrete bridge system for the State of Alabama.

References:

- Fouad et al. (2006)
- Splice Sleeve Japan Ltd. (Undated)
- Paulson (1991)

Contact Information:

-

EVALUATION

Constructability:
Risk Value: -1

- Projecting bars need to be placed and aligned accurately.
- Difficult to align column bars in grouted splice sleeves, especially for two or more columns. Measurements as precast columns are placed on footings, and matching templates for column and cap beam are critical.
- Difficult to assure that grout pads are uniformly supporting cap beam.

Seismic Performance:
Value: -1

- Need to determine if the bar splice in the plastic hinge zone performs adequately, cyclic testing required. Recommend use in low seismic region.
- Hollow column section not adequate for load transfer in seismic lateral load condition.

Inspectability:
Value: -1

- Damage assessment post-earthquake may require dismantling a portion of the connection.

Durability:
Value: 0

- Durability is similar to that of CIP concrete.

Time Saving Potential:
Value: +2

- Precast cap beam and precast column save considerable time over CIP elements.

TRL Comments:

-

Additional Comments:

-

Location:	Foundation to foundation	**Type:**	Bar Couplers: Mechanical splice to connect precast footing to cast-in-place footing, CP
Title:	Connection BC-6 Partial Precast Spread Footing	**TRL:**	Maximum TRL: 8 TRL Gaps: 4, 5, 6
Source:	Utah DOT		

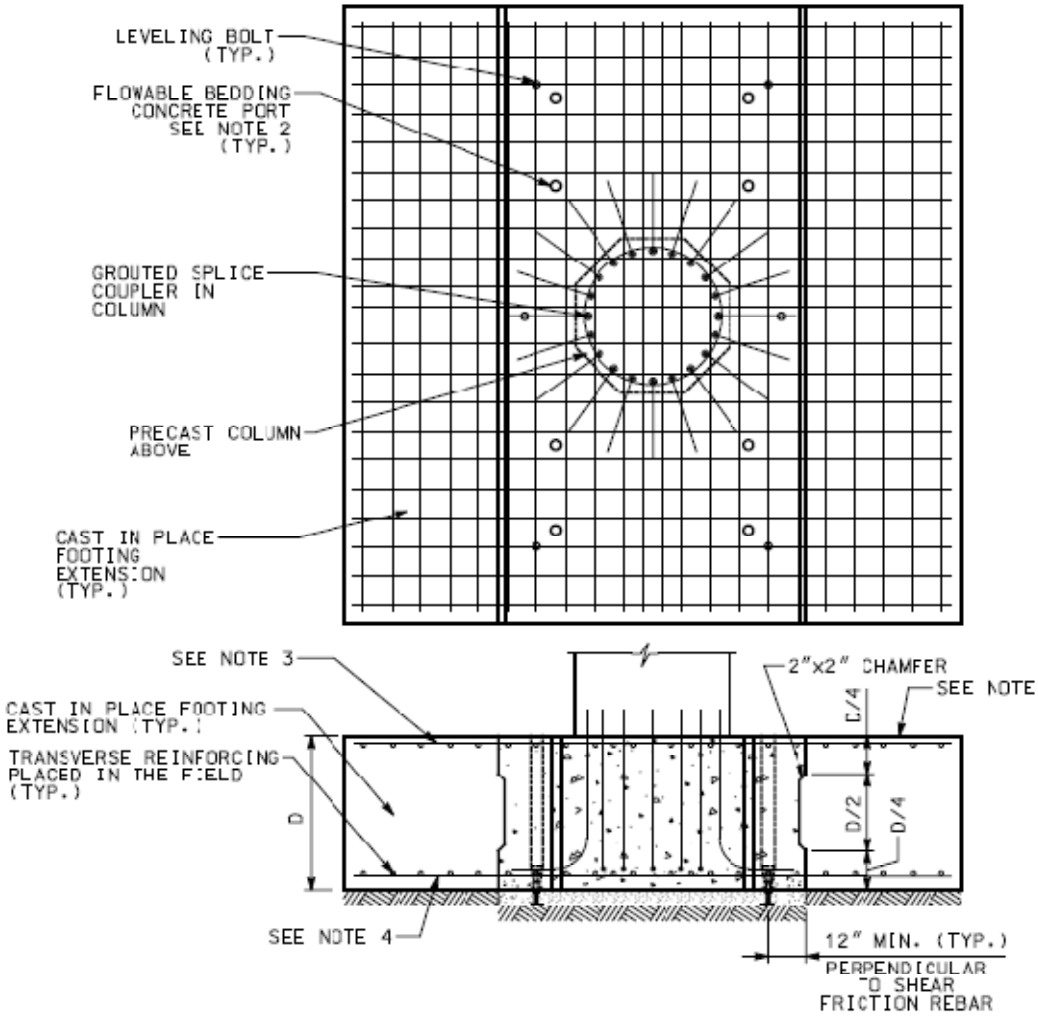

PARTIAL PRECAST SPREAD FOOTING

BACKGROUND

Title: **Connection BC-6** (Partial Precast Spread Footing)

History / Description:

- Central portion of footing is precast and side wings are CIP. Bar continuity provided by three options: bars extending from the precast footing to the edge of CIP footing; bars extending from the precast footing lap spliced with bars in CIP footing; and mechanical couplers embedded in precast to connect with CIP footing bars.
- Precast footings use leveling devices resting on soil and fill void between soil and footing with flowable bedding concrete.
- The connection has been built in Utah as part of Utah DOT standard precast substructure details.

References:

- Utah DOT Precast Substructure Elements Manual (2010)
- Utah DOT Precast Piers and Footings (2009)

Contact Information:

- Utah DOT

EVALUATION

Constructability:
Risk Value: 0

- Allows for smaller portion of footing to be transported thereby reducing the weight for lifting
-
- CIP footing portions could be poured concurrent with column erection, assuming soil beneath precast portion supports full weight of column.
-

Seismic Performance:
Value: 0

- Should behave similarly to CIP connection.
- Shows promise for seismic use. Needs to be tested for cyclic lateral loading.
-

Inspectability:
Value: 0

- Inspectability post-earthquake is the same as for CIP construction.

Durability:
Value: 0

- Similar to CIP footing.

Time Saving Potential:
Value: +1

- Precast footing can be set, leveled, and supported on a bedding layer, within the time required to form a CIP footing for a small footing. Columns can be immediately attached once the bed layer reaches adequate strength.

TRL Comments:

- Cyclic testing required to confirm use of connection during lateral loading.

Additional Comments:

- Okay for small footings, but heavy for big ones.

Location:	Foundation to column	**Type:**	BC-7: Precast column to footing with replaceable fuse bar ED
Title:	Connection S-2 Caltrans Replaceable Bar	**TRL:**	Maximum TRL: 4 TRL Gaps: Level 3
Source:	California DOT		

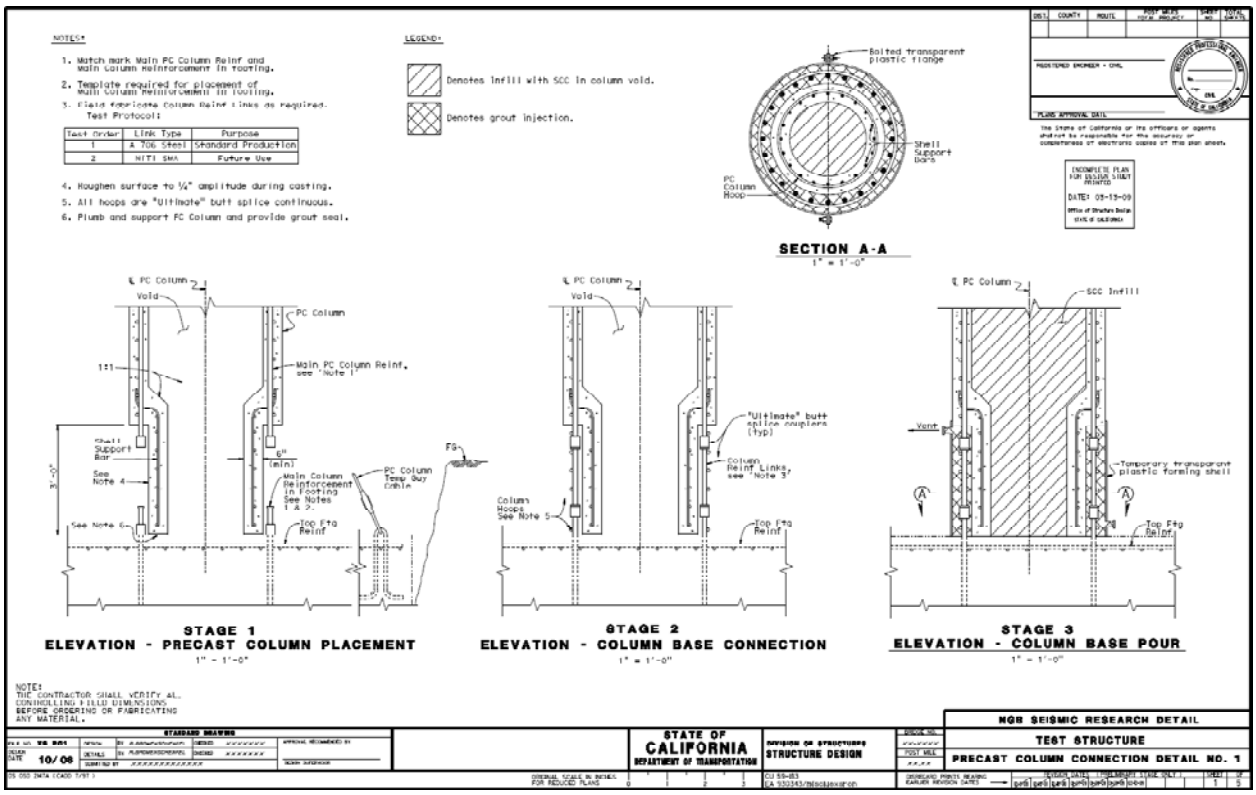

Example of Bar Connection Hardware

BACKGROUND

Title: **Connection BC-7** (Caltrans Replaceable Bar)

History / Description:

- A template is used to place vertical column reinforcement in the footing. Vertical reinforcement projects from footing and precast column. Column is placed and shimmed on footing. Reinforcement link bars are connected by splice couplers to the bars projecting from the column and footing. Spiral reinforcing is spliced together around the link bars. Concrete is cast around the splice region at the column base. Self-consolidating concrete is poured in the void of the column.
- Connection to be tested at University of Nevada - Reno in Spring of 2011.

References:

- Bromenschenkel (2010)

Contact Information:

- Ron Bromenschenkel (Caltrans) – ron_bromenschenkel@dot.ca.gov

EVALUATION

Constructability:
Risk Value: -2

- Projecting bars need to be placed and aligned accurately. Requires a template.
- Lateral tolerances are tight since bars must align with mechanical couplers.
- Couplers need to provide length tolerance. Otherwise, there is no vertical adjustability to ensure threads are fully tightened.
- Use of hollow precast column reduces erection weight, but will require infill in the plastic hinging zones.
- The column cross-section varies at the base. It is difficult to make a pipe with a non-prismatic form.
- Need to splice spiral reinforcing around link bars.
- Aligning replacement fuses might be difficult if the main bars have been distorted by earthquake motions.

Seismic Performance:
Value: 0

- (Estimated) Yielding of the fuse bars requires fuse bars no stronger than the main bars. Couplers are on the market that permit splicing of different size bars and permit limited gaps to be made up with shims. Such couplers are required for this connection. The couplers must also be capable of developing the full tensile strength of the smaller bar.
- Seismic behavior is intended to be emulative of CIP construction.

Inspectability:
Value: 0

- About equal to CIP

Durability:
Value: -1

- The threaded couplers are likely more prone to corrosion than other regions. The integrity of the concrete shell is critical in preventing such corrosion.

Time Saving Potential:
Value: -1

- Aligning and connecting the fuse bars, then casting the external and internal concrete constitute additional steps.

TRL Comments:

-

Additional Comments:

-