APPENDIX B SUMMARY SHEETS OF GROUTED DUCT CONNECTIONS

APPENDIX B SUMMARY SHEETS OF GROUTED DUCT CONNECTIONS

Location:	Column to cap beam	**Type:**	Grouted Ducts: Column to precast Cap, ED
Title:	Connection GD-1 FHWA Connection Manual – 3.1.1.1.B	**TRL:**	Maximum TRL: 3 TRL Gaps: None
Source:	Texas DOT		

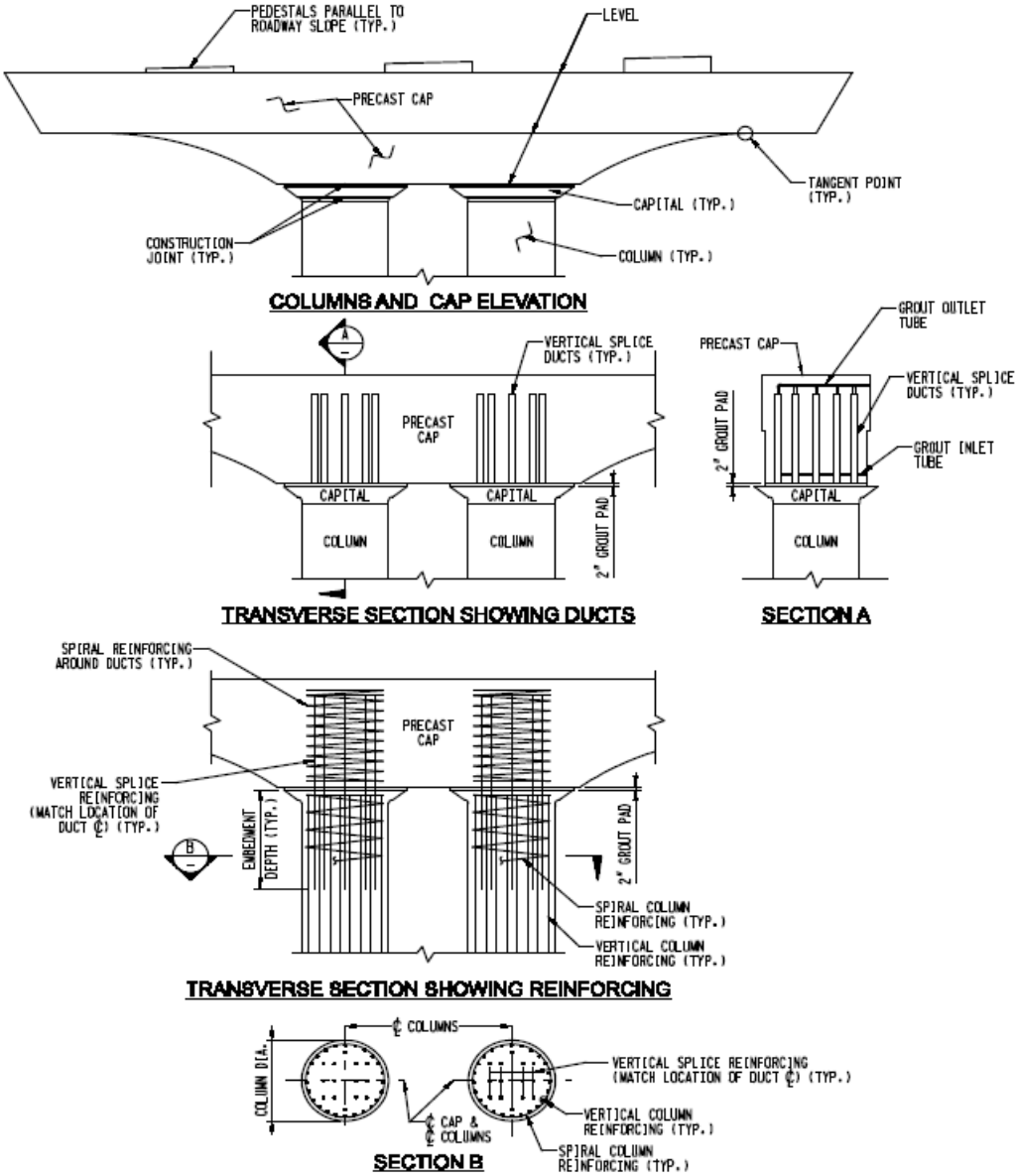

BACKGROUND

Title: **Connection GD-1** (FHWA Connection Manual – 3.1.1.1.B)

History / Description:

- Vertical bars project from the columns. A pier cap with corrugated metal ducts aligned with the column bars is lowered over the columns. The ducts are grouted using cementitious grout. The ducts stop short of the top reinforcing steel in the bent cap.
- Connection built many times since 2003.
- A similar, but not identical, grouted duct connection was tested monotonically to failure under eccentric axial and small lateral load by Matsumoto et al. (2001).

References:

- FHWA Connection Manual – 3.1.1.1.B (Culmo 2009)
- Matsumoto et al. (2001) ; Brenes et al (2006)

Contact Information:

- Lloyd M. Wolf, PE (Texas DOT) – lwolf@dot.state.tx.us

EVALUATION

Constructability:
Risk Value: -1

- Projecting bars need to be placed and aligned accurately. Here they are in the interior of the column, not tied to the spiral and need an alignment device.
- Difficult to align a large number of rebar in ducts, especially for multiple columns.
- Column capital requires separate concrete pour with joints above and below.
- Difficult to form and pressure grout the bedding layer above column.
- Effectiveness of the grouting vent system and bedding layer is questionable.

Seismic Performance:
Value: 0

- Needs spirals around internal bars and ducts. Short load path. Critical joint shear issue. Deformation is concentrated at beam-column interface.
- Shows promise for low seismic zone use. Needs to be tested for cyclic lateral loading.
- Need to determine whether the bar splice in the plastic hinge zone performs adequately.
- Capital flare at top of column could spall off.

Inspectability:
Value: -1

- Damage assessment post-earthquake will require dismantling a portion of the connection.

Durability:
Value: 0

- With good quality grouting, durability is similar to that of CIP concrete.

Time Saving Potential:
Value: +2

- Precast cap beam saves considerable time over CIP cap beam.

TRL Comments:

-

Additional Comments:

-

Location:	Column to cap beam	**Type:**	Grouted Ducts: Precast column to precast cap, ED
Title:	Connection GD-2 Large Bars in Large Ducts	**TRL:**	Maximum TRL: 8 TRL Gaps: None
Source:	University of Washington		

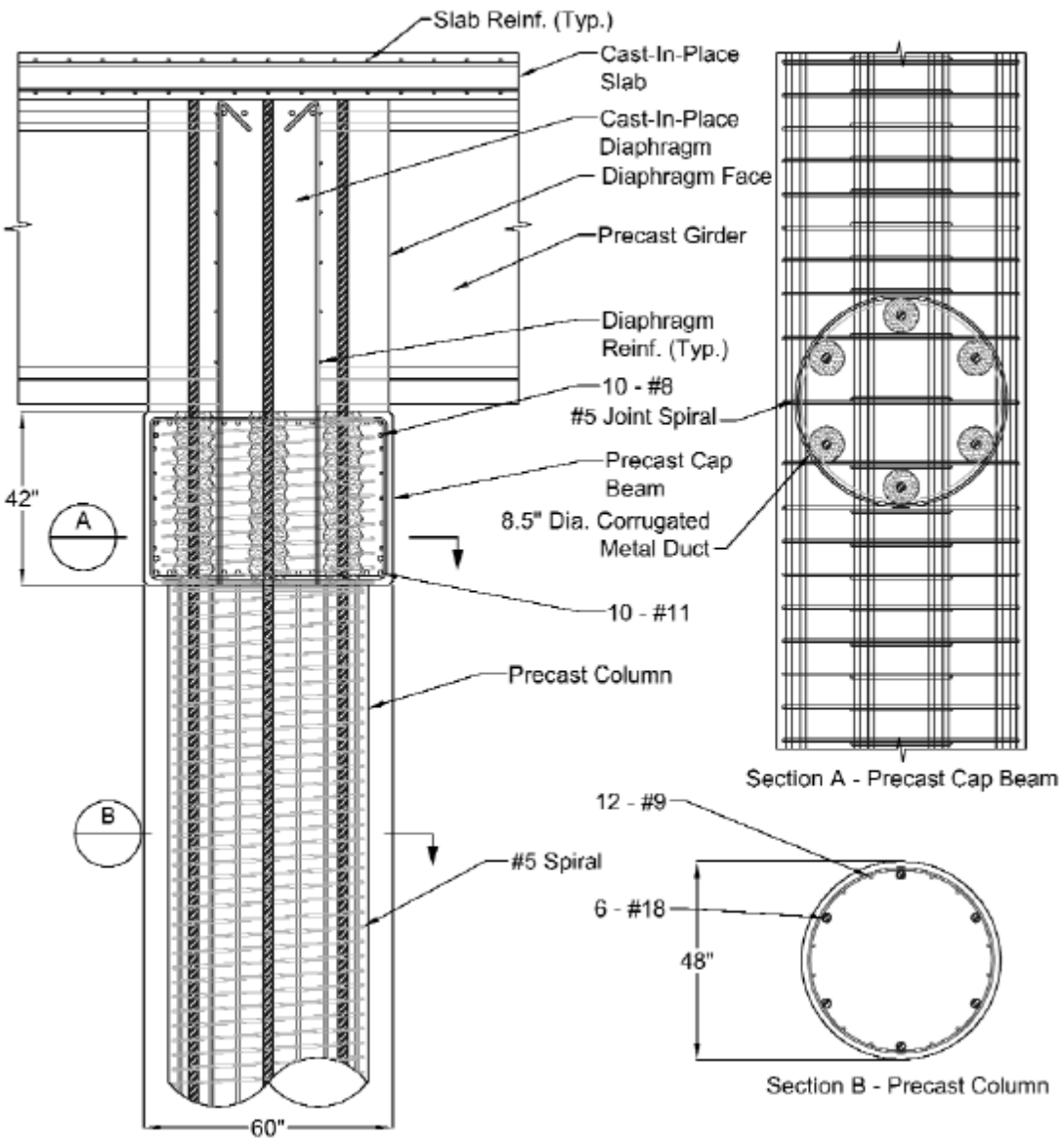

BACKGROUND

Title: **Connection GD-2** (Large Bars in Large Ducts)

History / Description:

- A small number of large diameter bars project from the column. The precast pier cap beam contains corrugated metal ducts that align with the column bars as it is lowered onto shim stacks in the bedding layer. The bedding layer and ducts are then grouted using cementitious grout poured from above the cap beam. The ducts extend through the full depth of the bent cap and the column bars extend into the CIP diaphragm above.
- The connection was developed in cooperation with the WSDOT, which used it to construct a freeway overpass in the autumn of 2010.
- Seismic performance tested at University of Washington.

References:

- Pang et al.(2008,2010)

Contact Information:

- Prof. John Stanton (University of Washington) – stanton@u.washington.edu

EVALUATION

Constructability:
Risk Value: 0

- Small number of large bars in large ducts allows for easier alignment and generous tolerances, and facilitates erection and inspection of the grouting process.

Seismic Performance:
Value: 0

- Anchorage of large bars in a short length demonstrated by Steuck et al. (2009).
- Deformations were concentrated at a single crack at the column-beam interface promoted by the additional column bars that stopped at the interface. The CIP reference specimen exhibited more distributed cracking over the column height.
- Design procedures should be developed to aid designers.
- Seismic response from tests emulative of CIP construction and performance.

Inspectability:
Value: 0

- Inspectability post-earthquake is the same as for CIP construction.

Durability:
Value: 0

- With good quality grouting, durability is similar to that of CIP concrete.
- Add a drip detail under the cap beam to provide protection against water ingress.

Time Saving Potential:
Value: +2

- Precast cap beam saves considerable time over CIP cap beam.

TRL Comments:

-

Additional Comments:

- Steel congestion in the diaphragm, as shown in the San Mateo-Hayward Bridge Widening Project photograph, prevents the use of T-heads or hooks on the column bars. However, J bars could be lap spliced to column bars after the cap beam is placed.

Location:	Column to column	**Type:**	Grouted Ducts: Precast column to precast column, CP
Title:	Connection GD-3 Large Bars in Large Ducts	**TRL:**	Maximum TRL: 8 TRL Gaps: None
Source:	University of Washington		

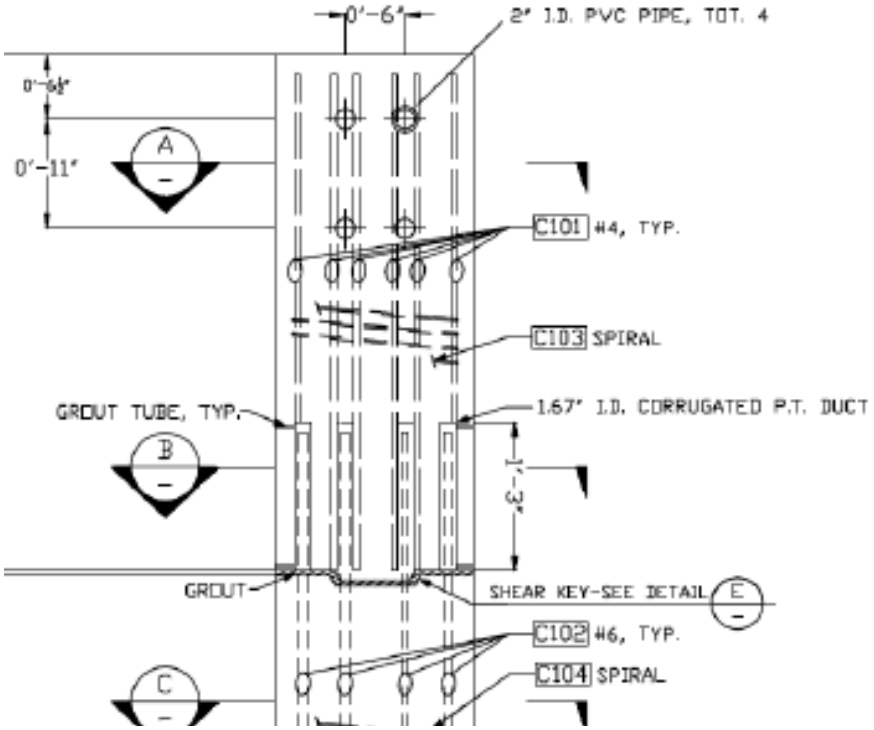

BACKGROUND

Title: **Connection GD-3** (Large Bars in Large Ducts)

History / Description:

- Large diameter bars in the lower portion of the column are anchored into grouted ducts in the upper portion of the column. The upper column contains a larger number of smaller diameter bars, which overlap with the grouted ducts.
- Seismic performance tested at University of Washington.
- First bridge is contracted to be constructed by the WSDOT in 2011, as a Highways for Life project.

References:

- Haraldsson et al. (2010 Draft)

Contact Information:

- Prof. John Stanton (University of Washington) – stanton@u.washington.edu

EVALUATION

Constructability:
Risk Value: 0

- Small splice bars can be tied to ducts and spiral during fabrication.
- Interface and ducts were grouted separately in the lab. Experience with flowable grout suggested that they could be grouted in one operation.
- Complete grouting of grout layer and ducts is essential. Bleed holes allow inspection.

Seismic Performance:
Value: 0

- Intended for use in capacity protected locations, not plastic hinge regions.
- Splice designed to transmit the yield strength of the column. Depends on lap splice of bars to ducts. Proprietary splice sleeves use butt-splice inside sleeve.
- Seismic response from tests emulative of CIP construction and performance.

Inspectability:
Value: 0

- Inspectability post-earthquake is the same as for CIP construction.

Durability:
Value: 0

- With good quality grouting, durability is similar to that of CIP concrete.

Time Saving Potential:
Value: 0

- Time to construct precast column segments and connect with grouted splice is similar to forming, pouring and curing CIP column.

TRL Comments:

-

Additional Comments:

- Inspectability and durability similar to those of proprietary splice sleeves.
- Grout key in center of column may be unnecessary.

Location:	Column to cap beam	**Type:**	Grouted Ducts: Column to precast Cap, ED
Title:	Connection GD-4 FHWA Connection Manual – 3.1.1.1.C	**TRL:**	Maximum TRL: 3 TRL Gaps: None
Source:	Texas DOT		

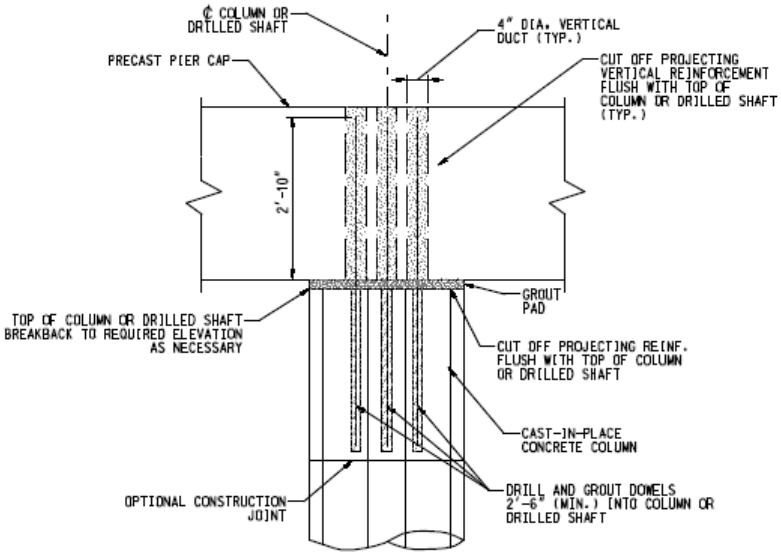

SECTION THROUGH PIER CAP AND COLUMN

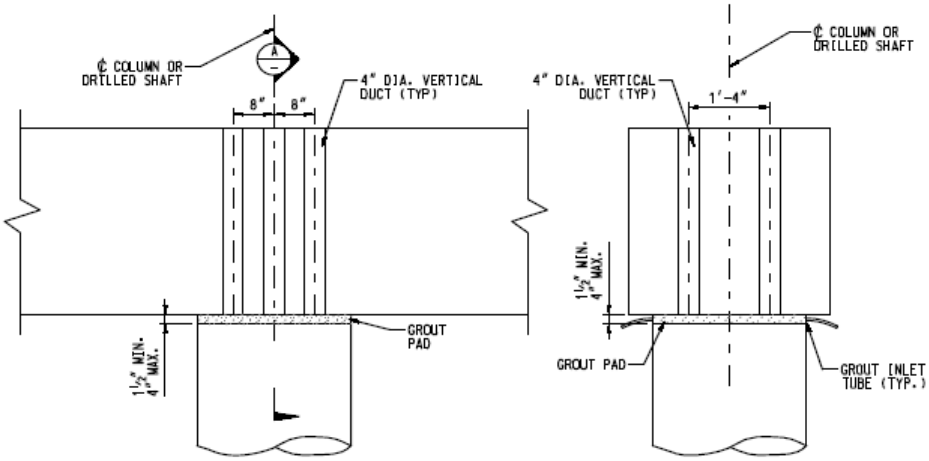

SECTION SHOWING VERTICAL DUCTS **SECTION A**

BACKGROUND

Title: **Connection GD-4** (FHWA Connection Manual – 3.1.1.1.C)

History / Description:

- Holes are drilled into the columns. Vertical bars are grouted into the holes and project upwards. Pier cap with ducts is lowered over the column. The ducts are grouted. Note that the ducts extend the full height of the bent cap.
- Lake Ray Hubbard Bridge article was written in 2002
- A similar, but not identical, grouted duct connection was tested monotonically to failure under eccentric axial and small lateral load by Matsumoto, et al. (2001)

References:

- FHWA Connection Manual – 3.1.1.1.C (Culmo 2009)
- Matsumoto et al. (2001) ; Brenes et al. (2006)

Contact Information:

- Lloyd M. Wolf, PE (Texas DOT) – lwolf@dot.state.tx.us

EVALUATION

Constructability:
Risk Value: -1

- Drilling holes for embedding steel in columns allows bars to be aligned with ducts in cap beam and facilitates Inspectability, but adds an additional step on site.
- Need to roughen and clean out holes in column prior to grouting dowels.
- Need to form and pour or pressure grout the bedding layer grout pad.
- Grouting of dowels in the pier cap beam can be performed from the top.

Seismic Performance:
Value: 0

- Shows promise for seismic use. Needs to be tested for large cyclic lateral loading.
- Need to determine if the bar splice in the plastic hinge zone performs adequately.
- Deformation is concentrated in plastic hinge zone.

Inspectability:
Value: -1

- Damage assessment post-earthquake will require dismantling a portion of the connection.

Durability:
Value: 0

- With good quality grouting and site drilling, durability is similar to that of CIP concrete, assuming that tops of ducts are protected from water infiltration.

Time Saving Potential:
Value: +2

- Precast cap beam saves considerable time over CIP cap beam.

TRL Comments:

-

Additional Comments:

-

Location:	Column to foundation	**Type:**	Grouted Ducts: Aluminum PT ducts in precast column to connect bars in footing, ED
Title:	Connection GD-5 Ducts in Column	**TRL:**	Maximum TRL: 6 TRL Gaps: None
Source:	University of Bergamo		

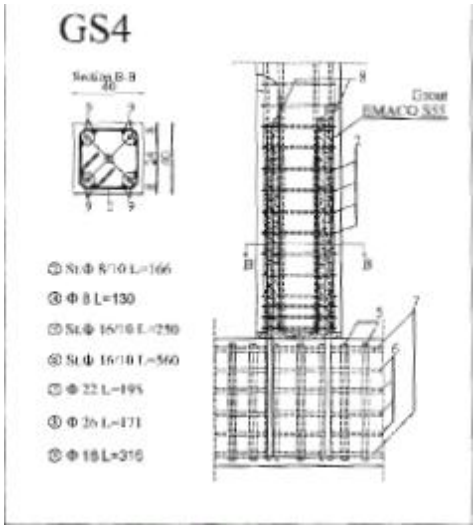

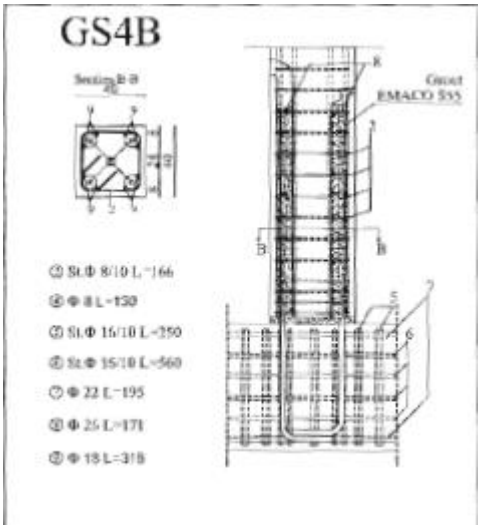

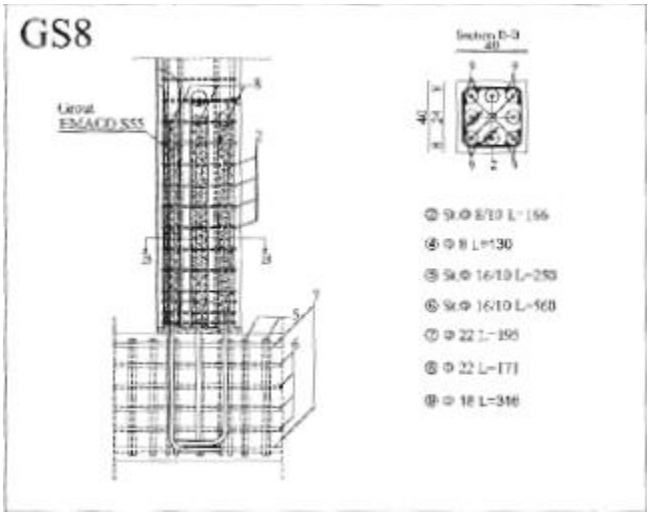

BACKGROUND

Title: **Connection GD-5** (Ducts in Column)

History / Description:

- Corrugated aluminum PT ducts are cast into the column. Reinforcing bars with hooked or straight anchorage are cast into the foundation and project from the top face. The column is placed onto the projecting bars. The bedding layer is formed and the ducts are filled with grout.
- This type of connection has been used in Italy to connect building columns to mat foundations.
- Seismic performance was tested at the University of Brescia, Italy.

References:

- Riva (2006)

Contact Information:

- Paolo Riva – paolo.riva@unibg.it

EVALUATION

Constructability:
Risk Value: -1

- Foundation projecting bars need to be aligned accurately.
- Complete grouting of grout layer and ducts is essential. Bleed holes allow inspection.
- Difficult to assure that the grout layer is fully filled.
- Use of aluminum PT ducts is questionable due to corrosion in contact with concrete.

Seismic Performance:
Value: 0

- Not clear if connection has been constructed in moderate to high seismic regions.

Inspectability:
Value: 0

- Inspectability post-earthquake is the same as for CIP construction.

Durability:
Value: 0

- Durability is similar to that of CIP concrete.

Time Saving Potential:
Value: +1

- Time to form the bedding layer, set the column, and grout the ducts with cure time is similar to forming, pouring and curing CIP column.

TRL Comments:

-

Additional Comments:

- Research related to buildings with smaller scale columns, tested approximately 16” square columns with 7/8” or 1” diameter bars

Location:	Column to cap beam	**Type:**	Grouted Ducts: Corrugated steel ducts in cap beam anchoring bars from column, ED
Title:	Connection GD-6 All Column Bars in Ducts	**TRL:**	Maximum TRL: 7 TRL Gaps: None
Source:	NCHRP 12-74		

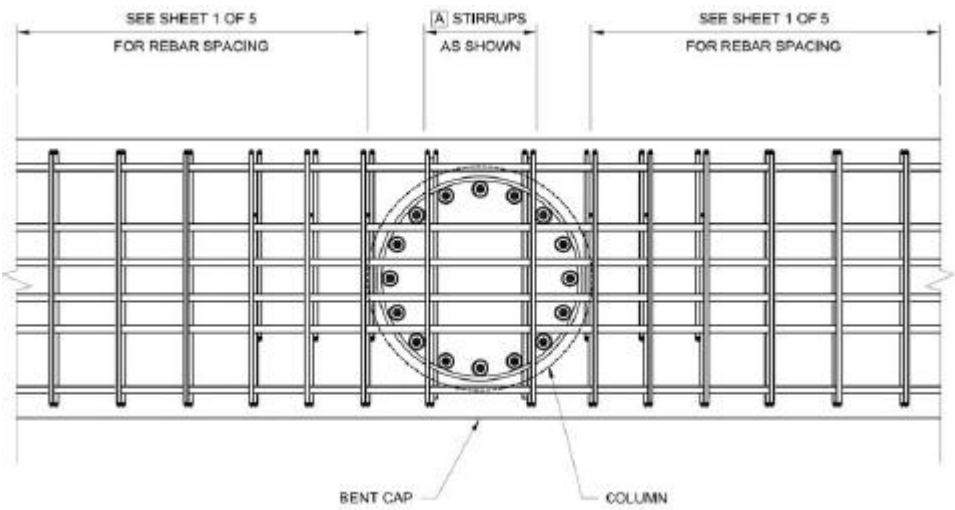

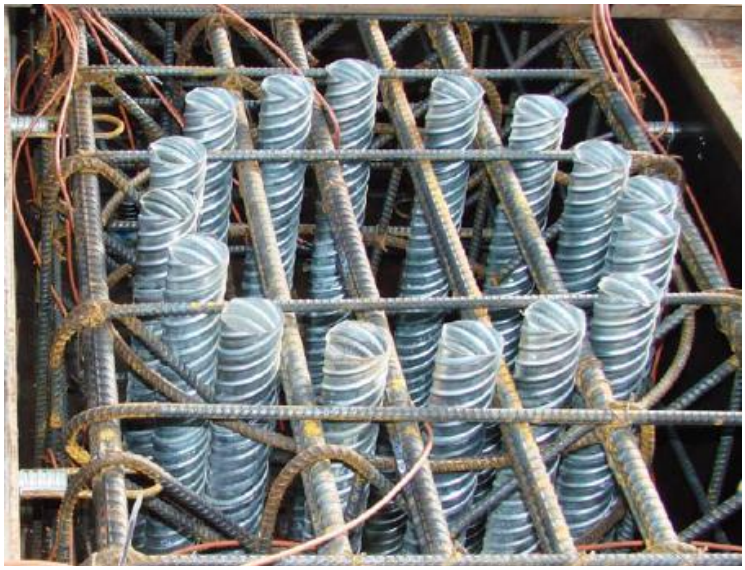

BACKGROUND

Title: **Connection GD-6** (All Column Bars in Ducts)

History / Description:

- The cap beam is cast with 1.75" diameter corrugated galvanized steel ducts. All of the vertical column reinforcing bars extend from the top of the column and are inserted into the ducts. A grout bed form is attached and the grout is pumped in from the bottom of the bedding layer, flowing upwards to fill the ducts. An air vent system in the top of the bedding layer assisted with prevention of air entrapment.
- Seismic performance was tested at CSU-Sacramento as part of NCHRP 12-74.

References:

- Matsumoto (GD 2009), Restrepo et al. (2010 Draft)

Contact Information:

- ematsumoto@csus.edu

EVALUATION

Constructability:
Risk Value: -1

- The large number of bars extending from the column into moderately sized ducts could be difficult to locate correctly and simultaneously align. A template is likely necessary.
- Need to form and pressure grout the bedding layer and ducts from the bottom.
- Inspection of grouting can be performed from the top of ducts.

Seismic Performance:
Value: 0

- Seismic response from tests emulative of CIP construction and performance.

Inspectability:
Value: 0

- Inspectability post-earthquake is the same as for CIP construction.

Durability:
Value: 0

- Durability is similar to that of CIP concrete, assuming that tops of ducts are protected from water infiltration.

Time Saving Potential:
Value: +2

- Precast cap beam saves considerable time over CIP cap beam.

TRL Comments:

-

Additional Comments:

- Spiral bars are required in the bedding layer to eliminate buckling of vertical bars.
- A similar connection was used in the SR 520 / SR 202 Bridge in Redmond, WA.

Location:	Pile to pile cap	**Type:**	Grouted Ducts: Precast pile cap connected to pile with adhesive anchored bars in drilled holes, ED
Title:	Connection GD-7 FHWA Connection Manual – 3.1.1.4.D	**TRL:**	Maximum TRL: 3 TRL Gaps: None
Source:	South Carolina DOT		

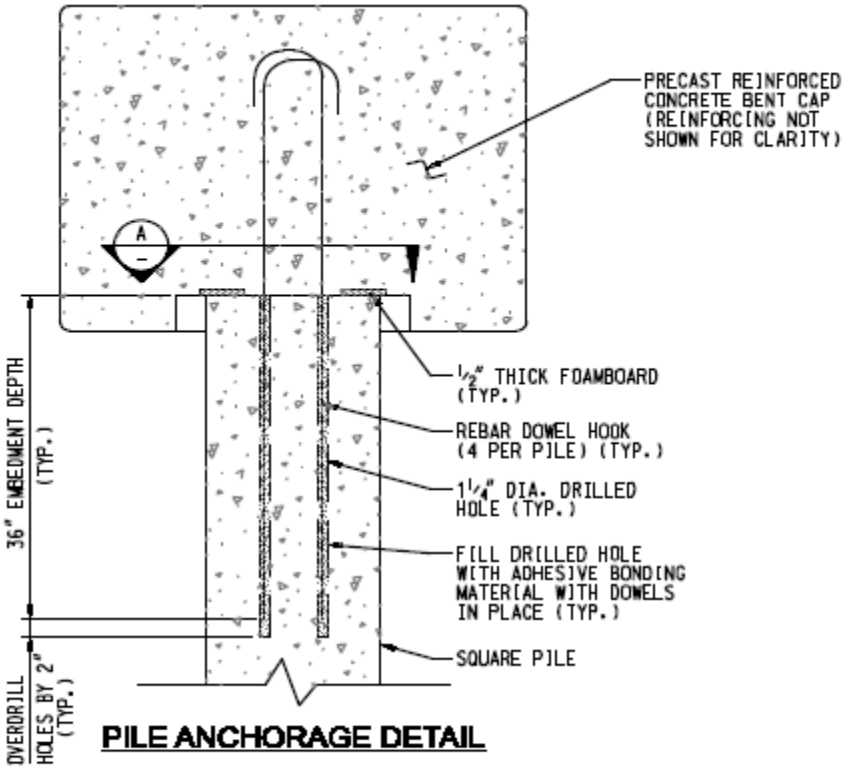

PILE ANCHORAGE DETAIL

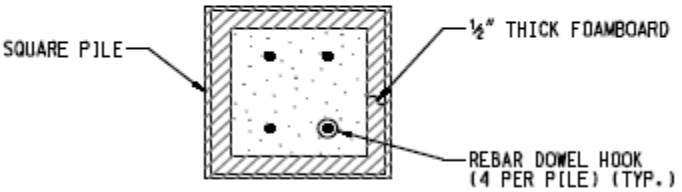

VIEW A: TOP OF PILE DETAIL

BACKGROUND

Title: **Connection GD-7** (FHWA Connection Manual – 3.1.1.4.D)

History / Description:

- After pile driving, holes are drilled in a precast pile to align with bars projecting from a precast pile cap. The holes are filled with adhesive and the dowels are inserted. Foam board is provided around the perimeter of the recess in the pile cap.

References:

- Culmo (2009)

Contact Information:

- Barry Bowers (SCDOT) – bowersbw@scdot.org

EVALUATION

Constructability:
Risk Value: -1

- Pile cap projecting bars need to be aligned accurately.
- Difficult to align multiple pile tops to match alignment of pile cap projecting bars.
- Difficult to inspect the adhesive bonding effectiveness.

Seismic Performance:
Value: -1

- The unpredictability of final pile locations might require the holes for connection bars to be drilled eccentrically in the cross-section. This could adversely affect connection performance by non-uniformly loading the pile or having little cover over the drilled holes.
- Spirals should be present as close as possible to the drilled holes with inserted bars. A rotohammer should be used so that internal bars are not damaged.
- Determine if the bar splice in the plastic hinge zone performs adequately.
- Potential for use may be limited to low seismic regions.

Inspectability:
Value: -1

- Damage assessment post-earthquake will require dismantling a portion of the connection.

Durability:
Value: 0

- Durability is similar to that of CIP concrete.

Time Saving Potential:
Value: +1

- Precast pile cap saves considerable time over CIP pile cap, assuming that very few adjustments in alignment of piles to pile cap bar projections are required.

TRL Comments:

-

Additional Comments:

-