APPENDIX F SUMMARY SHEETS OF INTEGRAL CONNECTIONS

APPENDIX F SUMMARY SHEETS OF INTEGRAL CONNECTIONS

Location:	Substructure to superstructure	**Type:**	Integral: Precast inverted tee bent cap to column ED but contains many CP elements
Title:	Connection IC-1 Caltrans Integral System	**TRL:**	Maximum TRL: 4 TRL Gaps: None
Source:	California DOT		

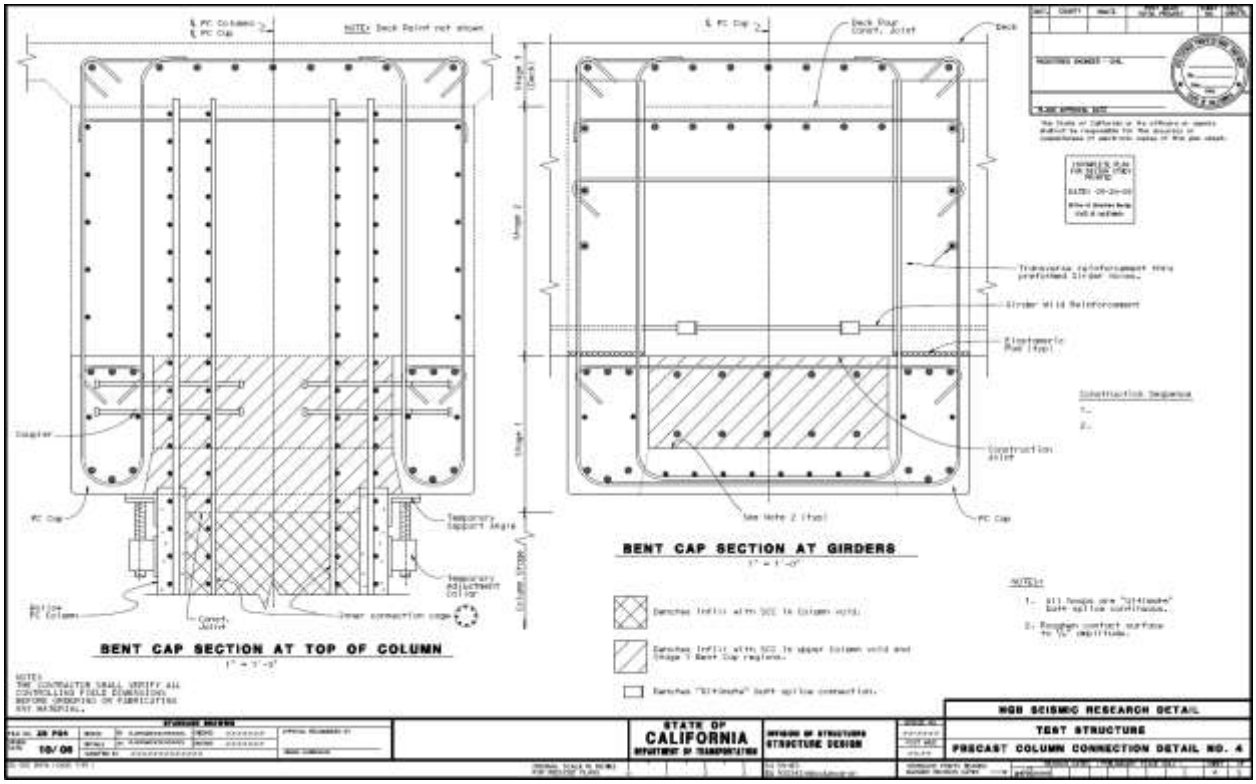

BACKGROUND

Title: **Connection IC-1** (Caltrans Integral System)

History / Description:

- Integral bent cap achieves moment connection between precast girders and inverted tee cap beam. A first or lower stage cap with side forms extending upward is supported off the column. Precast girders may then be placed in slots provided, connections between girders are made, then the upper portion of the cap can be poured.
- This system contains several capacity protected elements – e.g. girder to cap, lower stage to upper stage, and cap to cap connections. The primary plastic hinge in the overall system occurs in the pile just below the cap. For that reason the overall concept is designated ED.

References:

- Bromenschenkel (2010) *Caltrans Next Generation Bridge*, 26th US-Japan Bridge Engineering Workshop.

Contact Information:

- Ron Bromenschenkel and Mike Keever, Caltrans

EVALUATION

Constructability:
Risk Value: -1

- Requires multiple steps for casting concrete, but is similar to approaches used for marine construction.
- Good tolerances for cap beam placement.
- Girder reinforcement extensions must align.

Seismic Performance:
Value: 0

- Behavior similar to that of CIP connection provided that all the internal connections are appropriately capacity protected.

Inspectability:
Value:-1

- Inspectability should generally be similar to CIP, except the precast side elements at the lower stage could occlude post-EQ inspection of damage.

Durability:
Value: 0

- Durability should be similar or better than CIP due to the use of precast elements.

Time Saving Potential:
Value:+2

- The use of precast elements for cap beams significantly shortens construction time due to concrete curing of the cap beam before setting girders being removed from the critical path.

TRL Comments:

- Although this has not been tested, with sufficient sizing of elements the concept should be workable and adequate.

Additional Comments:

- Similar to San Mateo system described later in this section.

Location:	Substructure to superstructure	**Type:**	Integral: Column to steel box bent cap with integral steel girders ED but contains many CP elements
Title:	Connection IC-2 Steel Cap Beam to Concrete Column	**TRL:**	Maximum TRL: 6 TRL Gaps: None
Source:	Iowa State University / NCHRP 12-54		

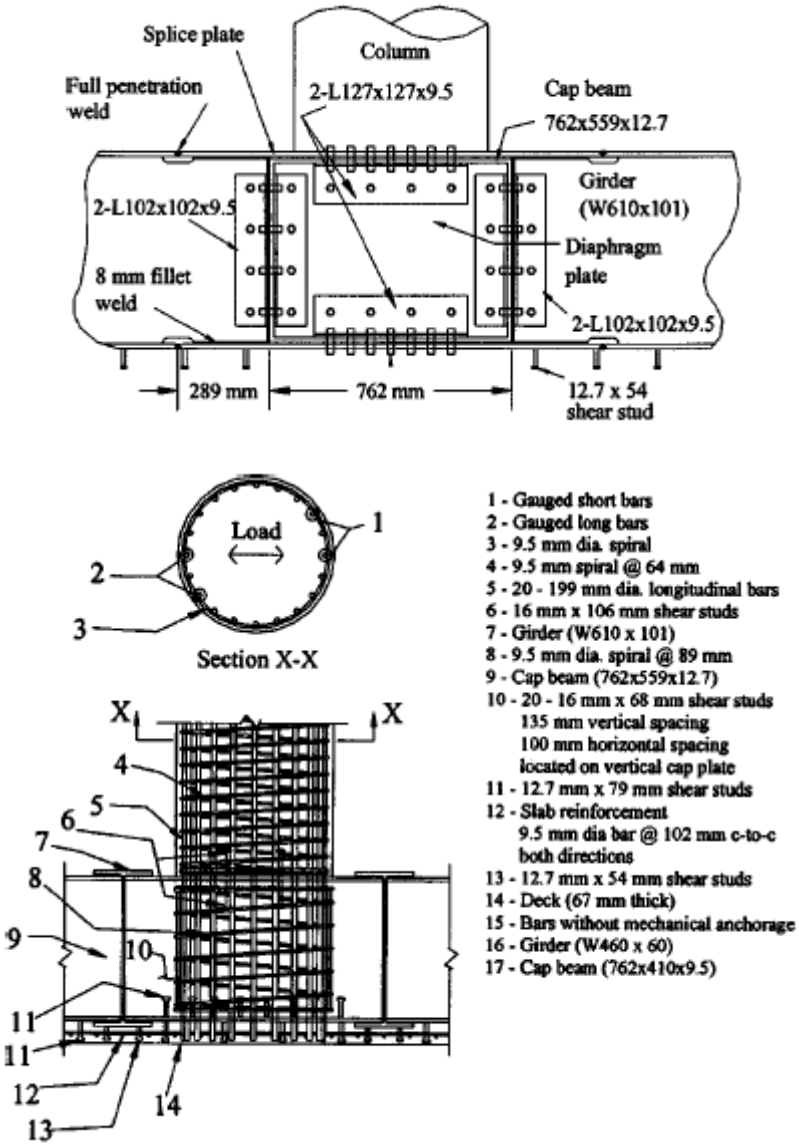

BACKGROUND

Title: **Connection IC-2** (Steel Cap Beam to Concrete Column)

History / Description:

- Prefabricated steel box bent cap is set over the steel reinforcing extending from the top of the column. Concrete is poured in the joint between the column and bent cap to integrate the two. Steel girders are moment connected to the bent cap to create an integral system.
- This system contains several capacity protected elements – e.g. all the steel girder connections and the integration of the concrete of the cap with the steel superstructure. The primary plastic hinge in the overall system occurs in the column just below the cap. For that reason the overall concept is designated ED.

References:

- Sritharan (2005)
- Connection tested at Iowa State University as part of NCHRP 12-54.

Contact Information:

- Prof. Sri Sritharan (Iowa State University) – sri@iastate.edu

EVALUATION

Constructability:
Risk Value:-1

- Use of steel bent cap and girders permits quick connections.
- Slotted holes and slip critical connections might be necessary for constructability.
- Field welds, potentially CJP welds requiring NDT, are required.
- Shear studs are provided to enhance the shear transfer between the steel and concrete. This could prove difficult at the top of the column.

Seismic Performance:
Value: 0

- Plastic hinging occurred in column; thus the system achieved its capacity protection goal with the cap beam and girders remaining elastic.
- It is not clear whether additional reinforcing was used in the joint region, but the structural steel alone must act as a single system of large strut and ties to provide force distribution. Distributed reinforcement could improve this, but would detract from constructability.

Inspectability:
Value: -1

- Steel stay-in-place formwork is occluding post-earthquake inspection.

Durability:
Value: 0

- Durability will be similar to other steel superstructure applications with a concrete deck.

Time Saving Potential:
Value: +2

- The use of prefabricated elements for cap beams significantly shortens construction time due to concrete curing of the cap beam before setting girders being removed from the critical path, provided that the steel can support the superstructure permanent loads alone.

TRL Comments:

- A demonstration project would be helpful for implementing this idea.

Additional Comments:

-

Location:	Substructure to superstructure	**Type:**	Integral: Column to precast concrete U-girders – spliced girder bridge ED but contains many CP elements
Title:	Connection IC-3 US 95 Widening	**TRL:**	Maximum TRL: 8 TRL Gaps: None
Source:	Nevada DOT		

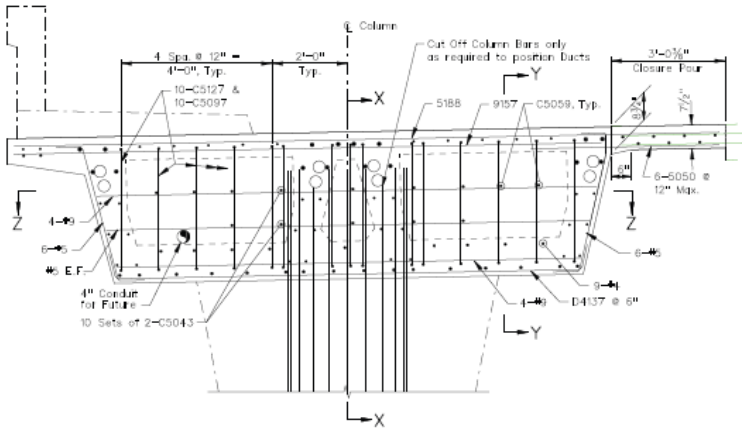

ELEVATION

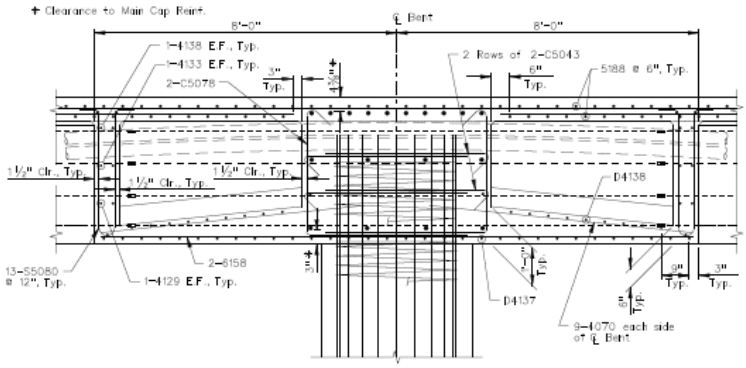

SECTION X–X

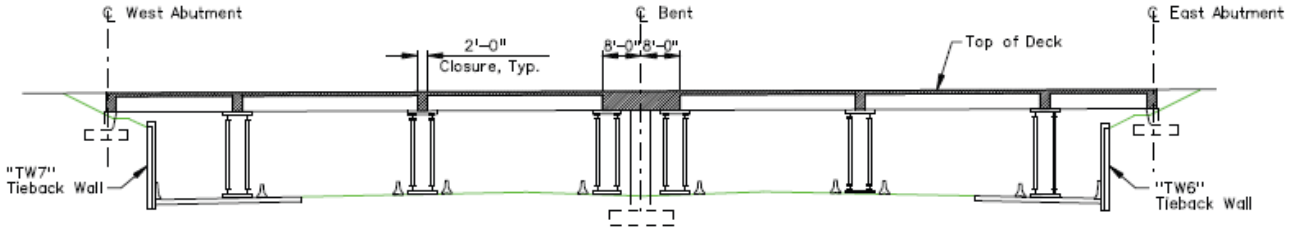

STAGE 5

BACKGROUND

Title: **Connection IC-3** (US 95 Widening)

History / Description:

- This integral connection is part of a spliced-U girder bridge in a moderate seismic zone, Las Vegas, NV. The connection over the pier is of CIP construction and the entire bridge is post tensioned longitudinally, which will benefit the integral connection force transfer mechanism. This connection is similar to IC-6.

References:

- Nevada DOT

Contact Information:

- Nevada DOT

EVALUATION

Constructability:
Risk Value: 0

- Construction of the center segment over the pier requires falsework and time for the CIP segment to gain sufficient strength.
- Risk is the same as CIP.

Seismic Performance:
Value: +1

- Seismic performance with the addition of PT should be slightly better than CIP alone.
- The connection should be able to transfer forces in a smooth fashion since all the cap beam is monolithic.
-

Inspectability:
Value: 0

- Inspectability is the same as CIP

Durability:
Value: +1

- Durability is the slightly better than CIP, alone, because the PT reduces crack opening in the negative moment region.
- PT durability will be a function of the quality of the tendon grouting, as with any bonded PT.

Time Saving Potential:
Value: 0

- Overall the bridge see time savings due to the use of precast superstructure elements, but the time savings for the center pier alone is neutral since it is actually of CIP construction.

TRL Comments:

- Readiness gaps represent the fact that this connection is very similar to that tested by Holombo, et al. for IC-6.

Additional Comments:

-

Location:	Substructure to superstructure	**Type:**	Integral: Precast lower stage cap ED but contains many CP elements
Title:	Connection IC-4 San Mateo Bridge widening	**TRL:**	Maximum TRL: 8 TRL Gaps: 6
Source:	PCI Seismic Report		

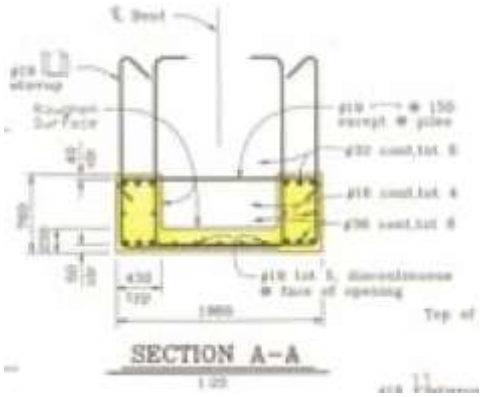

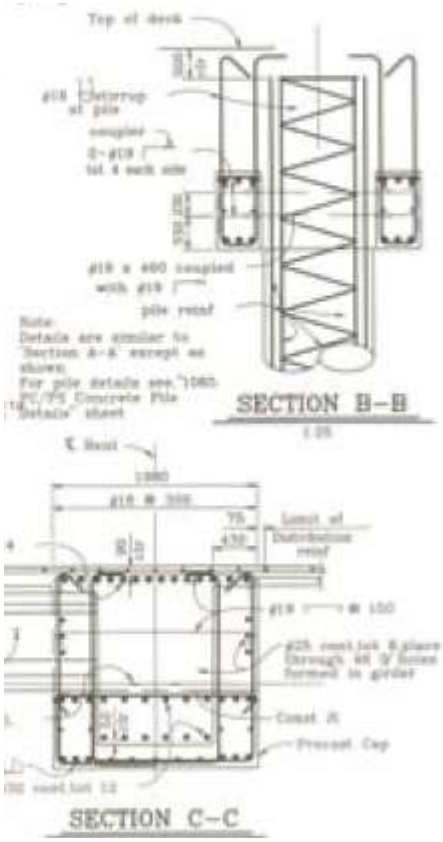

BACKGROUND

Title: **Connection IC-4 (Cap beam to column and superstructure connection)**

History / Description:

- The concept uses precast lower stage cap that has block outs for the column/pile to pass through. Note that the pile is demolished back such that only the reinforcing extends into the cap region. Girders are set on the lower stage then forms fill in between girders and the cap and deck are then poured.
- This system contains several capacity protected elements – e.g. girder to cap, lower stage to upper stage, and cap to cap connections. The primary plastic hinge in the overall system occurs in the pile just below the cap. For that reason the overall concept is designated ED.

References:

- PCI Seismic Report

Contact Information:

-

EVALUATION

Constructability:
Risk Value: 0

- Construction is based on a precast lower stage cap to support superstructure elements until all is integrated. The driven piles may be used as supports with collars or other devices attached to support the lower cap. The construction techniques are similar to marine construction that has been used previously.

Seismic Performance:
Value: 0

- Seismic performance would be expected to be adequate in all the elements above the connection interface (soffit of the lower stage cap) provided those elements are designed for the pile overstrength flexural effects.

Inspectability:
Value: -1

- Inspectability should generally be similar to CIP concrete since all elements are built with conventional concrete.
- Post-EQ inspection behind lower cap is a slight negative feature.

Durability:
Value: 0

- Durability should be similar to CIP provided adequate mix designs are used for each piece. Care should be taken with the connection around the pile connection, although the connection is similar to that widely used in marine applications.
- The lower stage precast element should have better durability than CIP.

Time Saving Potential:
Value:+2

- The precast lower stage greatly adds to time savings.

TRL Comments:

- No testing has been completed for this connection under seismic loadings.

Additional Comments:

-

Location:	Substructure to superstructure	**Type:**	Integral: Precast girder to cap beam connection CP
Title:	Connection IC-5	**TRL:**	Maximum TRL: 8 TRL Gaps: 6
Source:	WSDOT BDM		

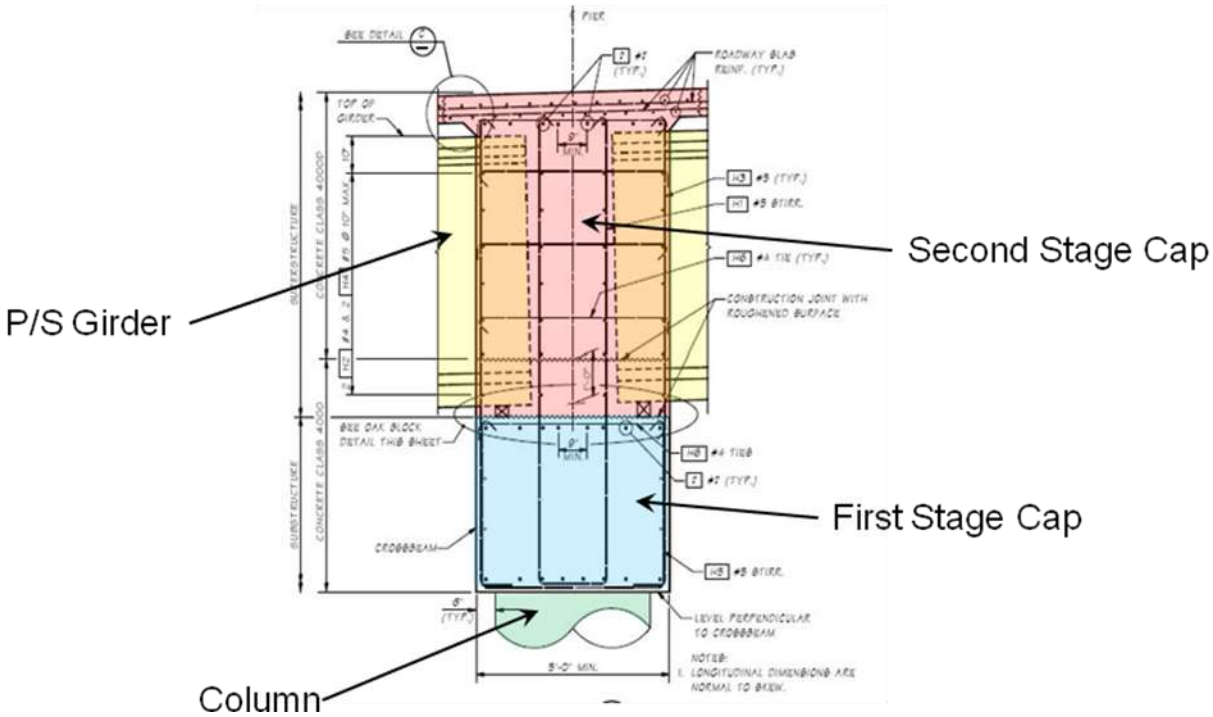

BACKGROUND

Title: **Connection** IC-5 (Precast Girder to Cap Beam Connection)

History / Description:

- Prestressed concrete girders are set on either side of a lower (first) stage cap beam. After all girders are placed the deck and upper (second) stage of the cap beam are poured integrating the girders and cap beam into a single unit. Prestressing strand is extended from the lower flange of the girders into the cap. Anchorage is achieved by using strand chucks. Strands from opposing girders overlap in the joint. Reinforcement in the deck concrete provides negative moment capacity over the pier.
- This system has been used for many years in the State of Washington. Both high seismic and low seismic versions are used. The lower seismic version has a hinged diaphragm above the lower or first stage cap. The higher seismic full-width version is shown in this evaluation sheet.

References:

- WSDOT Bridge Design Manual

Contact Information:

- Bijan Khaleghi, State Bridge Design Engineer, Washington DOT

EVALUATION

Constructability:
Risk Value: +2

- The system has excellent constructability, and numerous examples have been constructed in Washington State

Seismic Performance:
Value: 0

- Structures using this method of connecting the girders to the cap beam experienced the 2001 Nisqually earthquake with little or no damage.
- There have been no laboratory or full-scale tests of the connection efficacy for seismic loading.
- Joint shear calculations have been used for some years in the design of such connections.

Inspectability:
Value: 0

- Inspection is essentially the same as with CIP construction

Durability:
Value: 0

- Durability is the same as CIP construction

Time Saving Potential:
Value: 0

- This is a CIP connection so time savings is neutral.

TRL Comments:

- Large-scale testing of this connection should be undertaken.

Additional Comments:

-

Location:	Superstructure to substructure	**Type:**	Integral: Precast tub beam connection to CIP cap beam CP
Title:	Connection IC-6	**TRL:**	Maximum TRL: 6 TRL Gaps: None
Source:	Holombo et. al. 2000 / UCSD		

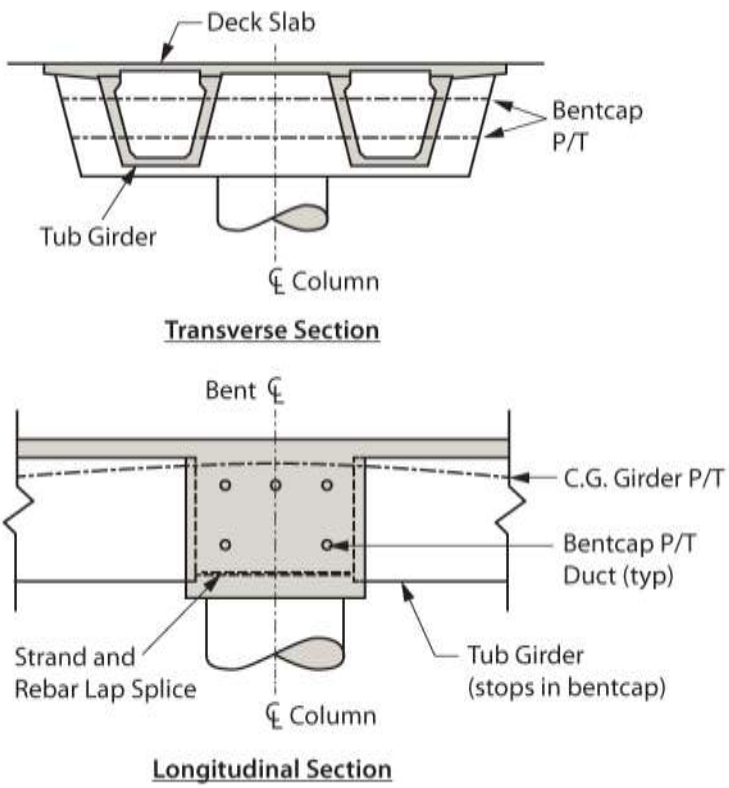

BACKGROUND

Title: **Connection IC-6** (Precast tub beam connection to CIP cap beam)

History / Description:

- Precast tub beams are integrated with a CIP cap. The arrangement is a flush-soffit connection, thus requiring falsework support for the construction of the cap. The girders also must be supported during this operation. PT of the cap beam is also included, but it passes through the CIP portions of the construction.

References:

- Holombo, Priestley, and Seible (2000) Continuity of Precast Prestressed Spliced-Girder Bridges Under Seismic Loads, PCI Journal, March-April.

Contact Information:

- Holombo, Priestley, Seible

EVALUATION

Constructability:
Risk Value: 0

- Constructability is similar to other CIP cap beam types. The only aspect of ABC construction is the use of precast superstructures and potentially precast columns.

Seismic Performance:
Value: 0

- Seismic performance was acceptable, in that capacity protection relative to the column plastic hinging zone was achieved. Minor cracking occurred in the cap, but the cracks closed with removal of the lateral load. The diaphragm action of the tub girder soffit helped distribute the torsional moments along the cap beam. The researchers developed a design methodology using strut and ties, to rationally design the cap torsional load path.

Inspectability:
Value: 0

- Inspectability is similar to CIP, and precast plant QC is used for the girders.

Durability:
Value: 0

- Durability should be similar to CIP. The CIP deck will block water intrusion into the girder to CIP cap joints.

Time Saving Potential:
Value: 0

- This concept is basically a CIP integral connection.

TRL Comments:

- Large-scale seismic testing has been completed.

Additional Comments:

- This connection is similar to that of IC-3 used for US 95 in Nevada.

Location:	Superstructure to substructure	**Type:**	Integral: Precast girder to precast cap connection CP
Title:	Connection IC-7	**TRL:**	Maximum TRL: 7 TRL Gaps: None
Source:	Restrepo, et. al. 2010 NCHRP 12-74		

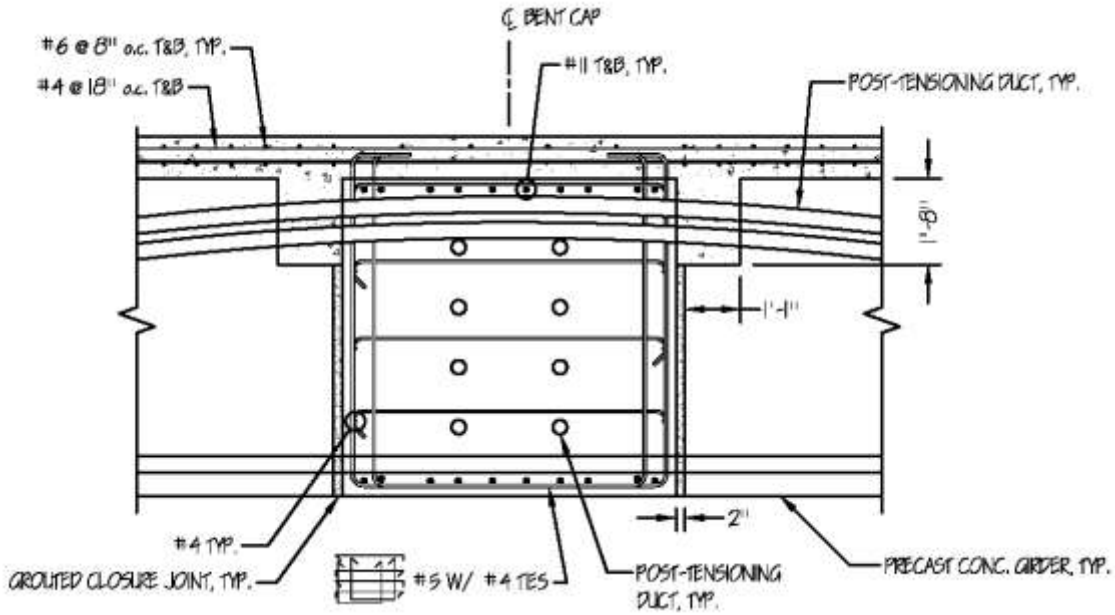

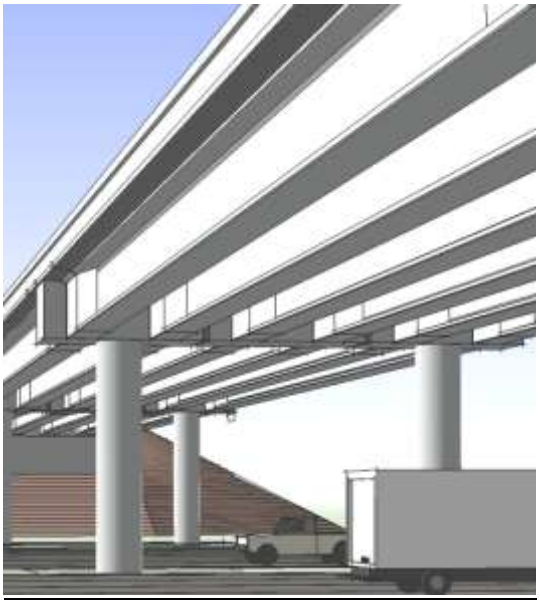

BACKGROUND

Title: **Connection IC-7** (Precast girder connection to precast cap beam)

History / Description: Girders are erected flush with the side faces of a precast cap. The soffit of the cap and girders are flush. PT tendons extend through the cap from the girders at the top and bottom. The bottom tendons are not stressed. A grouted closure joint is used to mate the girders to the cap.

References:

- NCHRP 12-74 Draft Final Report

Contact Information:

- Jose Restrepo, UCSD

EVALUATION

Constructability:
Risk Value: -1

- Construction of this system would require shoring to support the girders while the closure was made and the first phase of PT was applied. Additionally, PT duct connection requires block outs at the top of the web of the girders. Additionally, transverse PT is used. These features require some sort of shoring or strong-back bracket support system and require several additional operations and specialty subcontractors.

Seismic Performance:
Value: -1

- The seismic performance of this system was shown to be acceptable, and the system essentially achieved its capacity protection goals. Plastic hinging was forced to occur in the columns below the cap beam. The interface joint between cap and girders was designed to permit limited opening of cracks for positive moment provided the response was essentially elastic and the cracks closed upon removal of the load. Inelastic response was tested under negative moment, significant shear slip occurred underscoring the need for carefully detailed/anchored shear reinforcement in the deck slab.

Inspectability:
Value: 0

- Inspectability is generally good and indicative of segmental construction.

Durability:
Value: 0

- Durability should be similar to convention segmental construction provided that inelastic actions due to seismic loading and/or settlement have not opened cracks in the deck. Such cracks could be repaired if detected upon post-event inspection.

Time Saving Potential:
Value:+1

- This concept could improve construction time over CIP, although the PT activity in conjunction with having to support the girders drops this from +2.

TRL Comments:

- Large-scale testing has been completed and design provisions have been drafted.

Additional Comments:

-

Location:	Superstructure to substructure	**Type:**	Integral: Precast I-girder to CIP cap Capacity Protected Connection CP
Title:	Connection IC-8	**TRL:**	Maximum TRL: 6 TRL Gaps: None
Source:	Sritharan, Iowa State 2010		

BACKGROUND

Title: **Connection IC-8** (Precast I-girder to CIP cap with single column pier)

History / Description:

- Precast I-girders supported on inverted CIP tee beams were tested under longitudinal load. The connections included improved positive moment details on one side and conventional Caltrans practice details on the other side. The top of the single column was designed with confinement for plastic hinging.

References:

- Snyder and Srithanan, 2010 Caltrans Project 05-0160 Summary

Contact Information:

- Sri Srithanan, Iowa State University

EVALUATION

Constructability:
Risk Value: 0

- The system requires shored construction of the cap beam and as such is ABC by virtue of the precast I girder superstructure. The constructability is conventional and such bridges have been constructed in CA.

Seismic Performance:
Value: 0

- Seismic performance of both details, improved and conventional, was acceptable and sufficient to produced plastic hinging at the top of the columns without significant deterioration of the girder connection.

Inspectability:
Value: 0

- Inspectability is typical of CIP construction techniques.

Durability:
Value: 0

- Durability is typical of CIP construction techniques.

Time Saving Potential:
Value: 0

- Time savings in neutral.

TRL Comments:

- Large-scale testing has been completed.

Additional Comments:

-

Location:	Superstructure to substructure	**Type:**	Integral: Precast bulb tee connection to CIP cap beam CP
Title:	Connection IC-9	**TRL:**	Maximum TRL: 6 TRL Gaps: None
Source:	Holombo et. al. 2000 / UCSD		

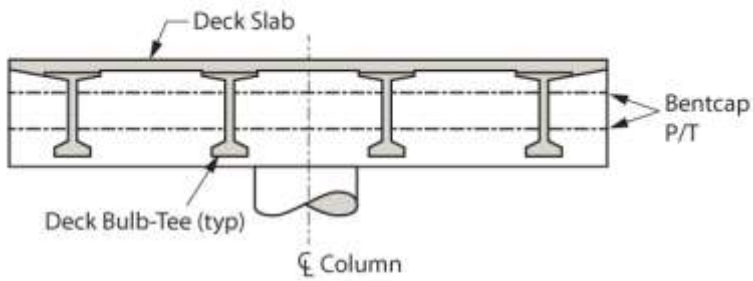

Transverse Section

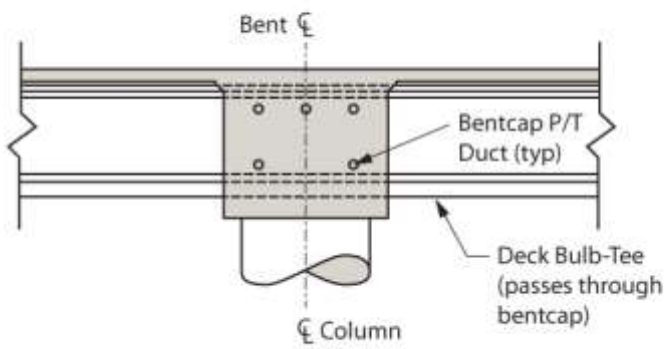

Longitudinal Section

BACKGROUND

Title: **Connection IC-9** (Precast bulb-tee beam connection to CIP cap beam)

History / Description:

- The bulb tees are extended through the cap beam before the cap beam is cast. This concept is for use with spliced girder bridges where other girders can be spliced to the pier segment using PT.
- Holombo, Priestley, and Seible (2000) Continuity of Precast Prestressed Spliced-Girder Bridges Under Seismic Loads, PCI Journal, March-April.

References:

- Holombo, Priestley, Seible

Contact Information:

-

EVALUATION

Constructability:
Risk Value: 0

- Constructability in the flush-soffit concept used requires falsework to support the pier segment girders until the CIIP cap is placed and gained sufficient strength. The concept also requires reinforcement, in this case PT tendons, to pass through the girders in the cap region to clamp the girders and cap together. The concept also requires columns to be located between girder lines.

Seismic Performance:
Value: 0

- Seismic performance was acceptable, in that capacity protection relative to the column plastic hinging zone was achieved. Minor cracking occurred in the cap, but the cracks closed with removal of the lateral load. The researchers developed a design methodology using strut and ties, plus interface shear, to rationally design the cap torsional load path.

Inspectability:
Value: 0

- Inspectability is similar to CIP, and precast plant QC is used for the girders.

Durability:
Value: 0

- Durability should be similar to CIP. The CIP deck will block water intrusion into the girder to CIP cap joints; plus the PT will provide continual stress to keep cracks closed.

Time Saving Potential:
Value:+1

- The use of precast superstructure pier segments provides enhancement of the construction time. However this application used a CIP pier segment; so time savings is modest at best.

TRL Comments:

- Officially the TRL is 6 for the tested configuration. However, similar configurations have been deployed; see below.

Additional Comments:

- The concept tested is similar to a spliced-girder bridge designed by BergerABAM for the City of Kent, WA in the late 1990s, the 277th Green River Bridge.

Location:	Superstructure to substructure	**Type:**	Integral: Welded connection of precast cap to steel H-pile bent foundation ED
Title:	Connection IC-10	**TRL:**	Maximum TRL: 8 TRL Gaps: 4-7
Source:	Wyoming DOT		

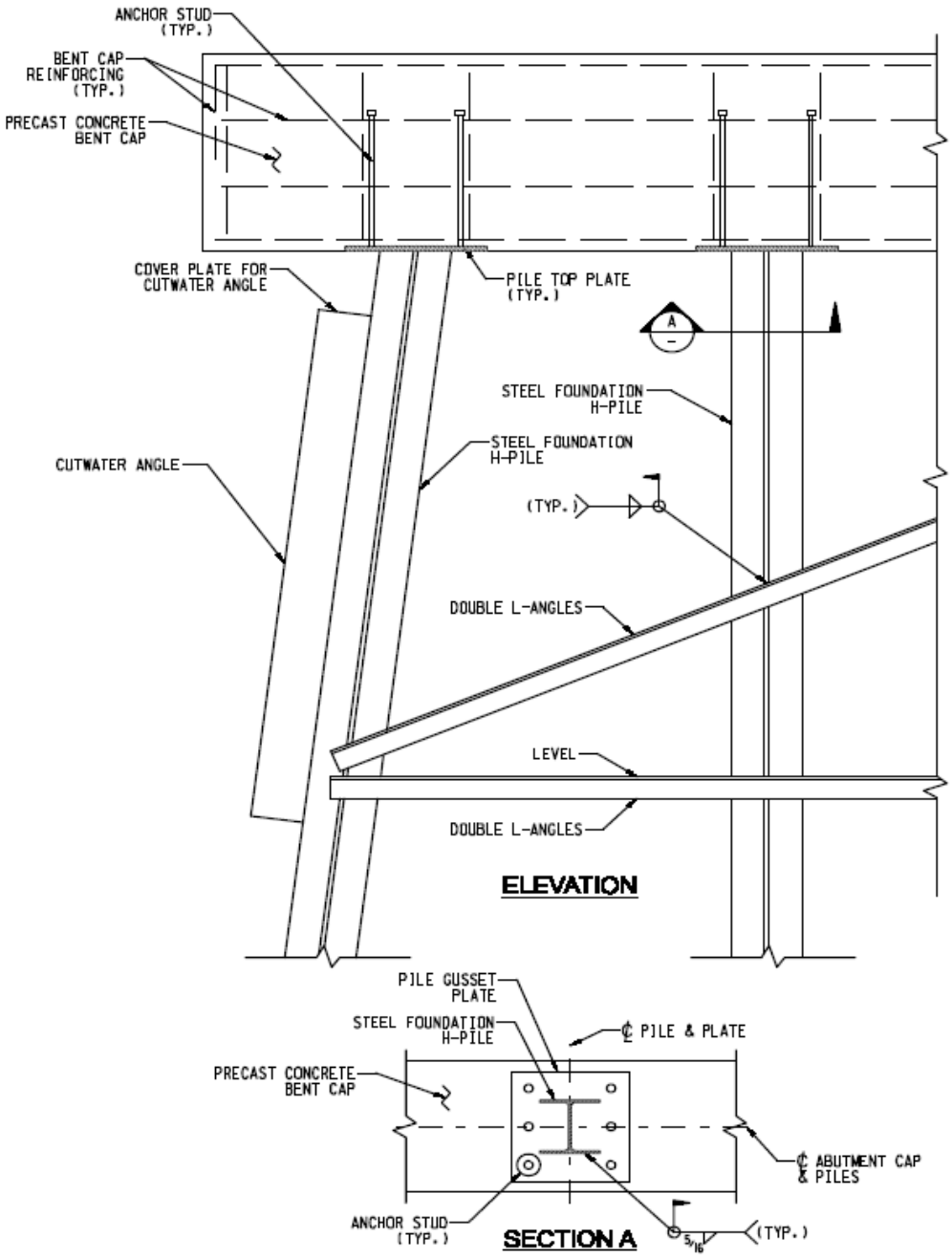

BACKGROUND

Title: **Connection IC-10 (Precast cap to H-pile connection)**

History / Description:

- A precast cap beam is constructed with embedded steel plates for connection in the field to steel piles extending above ground to the cap beam soffit. The steel piles must be cut off and the weld interface prepped. Connection is made via an overhead weld to embedded plates.

References:

- Wyoming DOT

Contact Information:

-

EVALUATION

Constructability:
Risk Value: -1

- Constructability of the cap beam is similar to other precast elements that have been used for many years. The welded connection is somewhat difficult to execute, but can and has been done. The connection is simpler to construct when welds are fillets and are small. Constructing CJP welds for this type connection is difficult.

Seismic Performance:
Value: -2

- The seismic performance of the connection when using light duty embedded anchors and fillet welds at the interface is suitable only for the lowest seismic regions.

Inspectability:
Value: 0

- Inspectability is conventional and the potentially brittle elements are easily seen during a post EQ inspection.

Durability:
Value:-1

- Durability is typical of conventional construction, but larger thermal forces or seismic loading could potentially damage the connection.

Time Saving Potential:
Value:+2

- This concept benefits from the use of precast cap elements.

TRL Comments:

- Although the connection has been used, it is not suitable for the highest seismic regions. Also testing has not been conducted to prove seismic efficacy.

Additional Comments:

- Such connections have been used in seismic regions in the past, but little or no testing has been done, design guidelines are not available, and the connections are highly vulnerable to local failures.

Location:	Column to cap beam	**Type:**	Integral: Precast cap beam segments are post-tensioned to precast Column CP with adjacent ED
Title:	Connection IC-11 Post-tensioned cap beam	**TRL:**	Maximum TRL: 4 TRL Gaps: Level 3
Source:	University of California – San Diego		

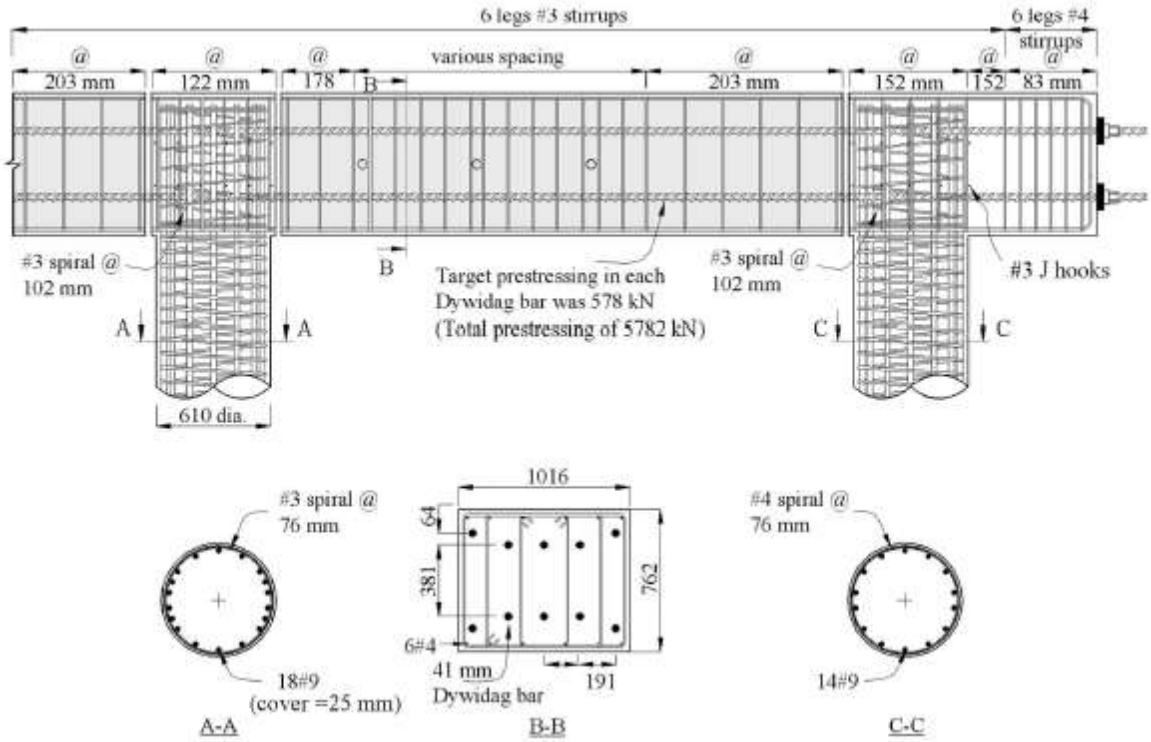

BACKGROUND

Title: **Connection IC-11** (Post-tensioned cap beam)

History / Description:
- Precast cap beam segments are connected to precast columns with post-tensioning bars. A thin layer of epoxy is used in the joints. The goal is to improve the joint behavior. The system does not work as hybrid.

References:
- Sritharan et al. (1999, 2001)

Contact Information:
- Prof. Sri Sritharan (Iowa State University) – sri@iastate.edu

EVALUATION

Constructability:
Risk Value: -1
- Column fabrication requires formwork that transitions between a circular and rectangular cross-sections.
- Need shoring to support the beam before PT.
- Need a lot of PT to carry the vertical load on the beam by shear friction.
- Beam and column segments must be aligned carefully so the PT bars fit.

Seismic Performance:
Value: 0
- Plastic hinging occurs in the column.
- Joint performance is improved over cast-in-place.
- Post-tensioning allowed joint reinforcement to be reduced.

Inspectability:
Value: 0
- Damage will be in the column. As cip.

Durability:
Value: 0
- Need corrosion protection details for PT bar and anchorages. Anchorages on the ends of the cap beam should be easier to protect than on top of the cap beam.
- Otherwise similar to, or slightly better than, cip, because concrete in cap beam is under compression, which inhibits ingress of moisture.

Time Saving Potential:
Value: 0
- Precasting the cap will save time, but the shoring, grouting and PT will add time.

TRL Comments:
- TRL 3 (non-seismic deployment) is classed as a gap, but temporary PT bars are used in many places for clamping p/c components while epoxy sets in the joint.

Additional Comments:
-