APPENDIX H DETAILED EVALUATION OF CONNECTION TYPES

TABLE OF CONTENTS

LIST OF FIGURES

LIST OF TABLES

APPENDIX H – EVALUATION OF CONNECTION TYPES

General

The description of the findings and the evaluation of connection types in this appendix are organized by force-transfer mechanism. The subsections of this appendix are

- Bar Couplers
- Grouted Ducts
- Pocket Connections
- Member Socket Connections
- Hybrid Connections
- Integral Connections
- Emerging Technologies

Descriptions of individual connections or systems are contained in Appendices A through G, and those descriptions are then used in the more general discussions and evaluations of the connection types, as listed above. This appendix provides the detailed evaluations of the connection types, and Chapter 3 summarizes the information shown here. As described in Chapter 2, each connection type is evaluated on the basis of the following.

- Technology readiness
- Performance potential, which is a composite of construction risk, seismic performance, durability, and post-earthquake inspectability
- Time savings potential

This appendix provides information on material requirements, construction techniques and detailed evaluation of laboratory testing of representative specimens of the connection type.

Materials

Materials common to many connection types are discussed below. For specialized material discussions, refer to the related connection type section. For example, a discussion of steel grouted sleeves is contained in the Bar Couplers section.

Reinforcing Steel. Reinforcing bars should, as a default, be specified as ASTM A706 steel to control the material's ultimate strength and maximize ductility. ASTM A615 bars are likely to be acceptable only in capacity-protected connections. Controlling the ultimate strength is important because, if a bar is stronger than anticipated, its failure mode could change from tension yield to pullout, and its behavior would then be brittle rather than ductile.

Prestressing Steel. Prestressing steel should satisfy ASTM A416 for strand or A722 for bars. Anchorages should be protected against corrosion, especially if they are relatively inaccessible after construction is complete. Strand wedge anchors cause stress concentrations, which, when combined with cyclic load, have been shown (Walsh and Kurama 2010) to cause failure at a strain significantly lower than that of the bare strand.

Precast Concrete. Precasting in a plant generally leads to better quality control, with respect to both materials and geometry. Heated forms permit higher early concrete strengths and pretensioning is possible.

An important consideration with precast columns is whether to cast the member vertically or horizontally.

Casting vertically:

- allows the production of uniform smooth surfaces for round columns.
- makes pretensioning difficult.
- requires the concrete to be lifted or pumped up to the top of the column.
- reduces worker safety (they need to work high above ground).

Casting horizontally:

- simplifies pretensioning.
- allows all work to be done close to the ground.
- requires one face of the column to be left open for depositing concrete, in which case it will have a finish that is different than on the other sides. Round columns are difficult to form.
- reduces the difficulty of depositing the concrete if the steel is congested.
- reduces the probability of segregation during casting.

Specialty Concretes. Fabrication of precast elements and placement of site-cast concrete for connecting the elements may be made easier by the use of self-consolidating concrete (SCC). This material is relatively new and offers the possibility of reducing or eliminating the vibration that would otherwise be needed for proper consolidation. However, characteristics other than its flow properties are still under investigation and it would be prudent to ensure that its shrinkage, creep, bond and other properties are suitable before adopting it.

Other materials, such as engineered cementitious composites or (ECCs), (Kesner and Billington 2003) are also under development and have promising properties. Similar caveats to those listed above apply to these materials.

Grout. The grout should be chosen to provide sufficient workability, and short- and long-term strength.

Epoxy versus Cement-based Grouts. A wide range of epoxy grouts is available. The services of a specialist subcontractor are recommended for choosing the appropriate combination of material properties (e.g., viscosity, strength, water resistance, etc.) and for installing the epoxy grout. For cement-based grouts, specialty prepackaged grouts are recommended because they typically provide higher strength and lower variability than site-mixed sand-cement grouts.

Fiber Grout. Fibers in the grout help prevent its falling out of vertical joints between elements under cyclic load if the joints open and close (National Institute of Standards and Technology [NIST]). However, in tests fibers were found to lower the cube strength and anchorage properties of the grout (Steuck et al. 2009).

Interface grout may be selected to be stronger or weaker than the adjoining concrete, depending on which is selected to be the sacrificial element during inelastic action. If the grout pad is thin compared with its lateral dimensions, confinement due to friction at the interface with the concrete will increase the grout's compressive strength significantly beyond the value obtained from standard test cubes. For the grout to be the sacrificial element, its cube strength will have to be significantly lower than the concrete cylinder strength.

The set-up time and viscosity, or flowability, of the grout should be chosen to ensure complete filling of all voids prior to initial set. A trial with a mock-up connection is recommended. The grout mixture should have low shrinkage properties to prevent separation from the adjacent precast concrete or other material.

Construction Risk

For the purpose of this report, construction risk considerations encompass fabrication, transportation, on-site erection issues, as well as risks for the construction schedule and cost.

Fabrication. If the precast element fabrication is subcontracted, the contract must be executed in time for the precast fabricator to plan and execute his or her work so that the elements are delivered on schedule. Additionally, if the precast element fabrication is subcontracted, then the general contractor must institute a quality assurance program to ensure that tolerance-sensitive elements—such as individual projecting bars, ducts, or complete match-cast elements—fit together in the field. A mock-up test before shipping could demonstrate that elements fit before they are delivered to the site, but these precautions would add cost and schedule time.

Transportation. Transportation of the elements to the site must be planned to account for element size, weight, permitting, and available time windows on highways.

On-site Erection. The members must be plumbed, leveled, and braced. Many methods are possible (e.g., shims, tension bracing, compression bracing). If match-cast elements are used, they must be properly aligned so that the overall geometry of the finished element is correct.

The on-site construction time depends on the following.

- The difficulty in aligning the elements. For example, a single cap-beam resting on three columns is harder to align than is a hammerhead cap-beam supported on a single column.
- Access for cranes and personnel.
- The number of sequential processes needed to erect the bridge. For example, in a grouted duct connection, grouting both the interface and the ducts simultaneously is faster than grouting them separately.
- The number of subcontractors involved. For example, post-tensioning, epoxy grouting, etc. usually require a specialist subcontractor.
- The curing time for materials, such as site-cast concrete and grout.

Schedule and Cost Risks. Prefabricated elements that are schedule-critical need special attention as they need to be delivered to the site on time and to fit without time-consuming

adjustments. Such components need to be subjected to a risk and risk-mitigation analysis that includes quality assurance and contingency planning for repair or replacement of the component in the event of damage or poor fit.

The fabrication of stay-in-place formwork typically needs a subcontracting fabricator; hence, the supply chain, logistics, and quality assurance have to be carefully planned.

The connections can be designed and planned to have minimum schedule risks if all construction tolerances are considered in the design and the connection assembly procedure is planned to be insensitive to variations in the curing time needed for the concrete or grout.

Seismic Performance

Capacity-protected Connections. A connection is considered capacity-protected by ensuring that the demand/capacity under the action of overstrength level forces ratio is always less than 1.0. For example, if a column connection transfers primarily moment, the connection can be capacity-protected by placing it at mid-height where the moment demand is low compared with the value at other locations. If this placement is not possible, significant strength capacity might be needed in the connection. For example, if the connection is at the top or bottom of the column, where the moment is usually the maximum, its strength would have to be very high to force the yielding into an adjacent region where the demand was lower.

Provided that the cyclic strength of the connection is sufficient, no ductility is needed, so a wide variety of connections may be used in a capacity-protected location. However, it should be noted that cyclic strength capacity may be less than static strength capacity.

Energy-dissipating Connections. The design of energy-dissipating connections is function-dependent, so details are discussed in each group summary. Inelastic deformation is necessary for the dissipation of energy, but it is likely to occur primarily in one degree of freedom (DOF), such as rotation. In that DOF, sufficient strength and ductility must be provided to dissipate the desired energy. However, the requirements in the other DOFs at the same location may be different. These other DOFs should be designed as capacity-protected if failure in them is undesirable. For example, a connection may be required to dissipate energy in flexure, but to have sufficient strength in shear to undergo only elastic shear deformations. Thus, the characteristics of energy-dissipation, capacity protection, and deformability should be applied to each degree of freedom individually rather than to an entire connection. In concrete structures, the provision of ductility usually entails confinement reinforcement, such as spiral or closed ties.

Deformability Elements. Deformable element connections offer little or no resistance in at least one DOF, but may be strong and rigid in others. The rotation of a beam end on a rubber or elastomeric pad, with no loss of vertical resistance, illustrates the principle. Some resistance may be developed, such as in a Mesnager hinge (Moreell 1935), where the member cross section is reduced sufficiently to concentrate all of the deformation there. In such a hinge, the reinforcing bars cross diagonally in the plane of the reduced section, and this detail further ensures minimum flexural resistance. Because such a connection dissipates a small amount of energy, it shows that the boundary between deformable and energy-dissipating connections is not distinct. As with

energy-dissipating connections, DOFs other than the primary one in which the deformation is intended must be protected against damage, possibly by capacity protection.

Miscellaneous. Internal shear keys: The interface between two members generally has to transmit some shear in addition to axial force and moment. Some shear can be carried by shear-friction. For higher shear/moment ratios, a shear key may be considered between contact faces of two members. However, shear keys make grout installation more difficult and may also create stress concentrations and promote cracking at their edges.

Bar Couplers

Description

A bar coupler is used to splice two bars together, end-to-end. It allows axial force to be transferred from one bar to the other and performs the same function as a welded butt splice. In most cases compression can be resisted by end bearing, and the transfer of tension is the more critical matter. A typical arrangement is shown in Figure 1.

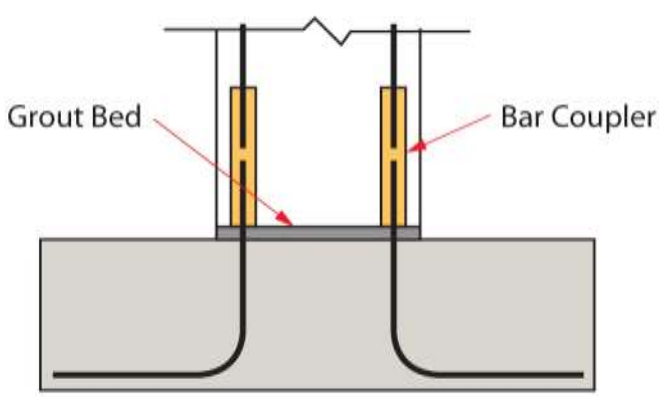

Figure 1 Bar coupler – typical application

Several styles of coupler (described below and illustrated in Figure 2) are commercially available, and each depends on a different mechanical principle.

- *Threaded sleeve.* The bars are equipped with male thread, and they screw into a sleeve with female threads. The threads may be tapered in order to reduce the number of turns necessary for full engagement. Such couplers permit little alignment tolerance.

- *Headed bars with separate sleeves.* A head is formed on the end of each bar and a threaded coupling piece draws the two together. To ensure contact for transferring compression, a shim may be placed between the bar ends.

- *External clamping screws.* A steel sleeve fits over the bar ends. Set screws are driven radially through the sleeve into the bar. The tension force is transferred from bar to sleeve to bar through shear in the screws.

- *Grouted sleeves.* A steel sleeve fits over the bar ends and is filled with grout. Tension is transferred by bond from bar to grout, and grout to sleeve. A variant of the grouted sleeve uses a screw thread to connect one bar to the sleeve and grout to connect the other. This adaptation allows the sleeve to be shorter.

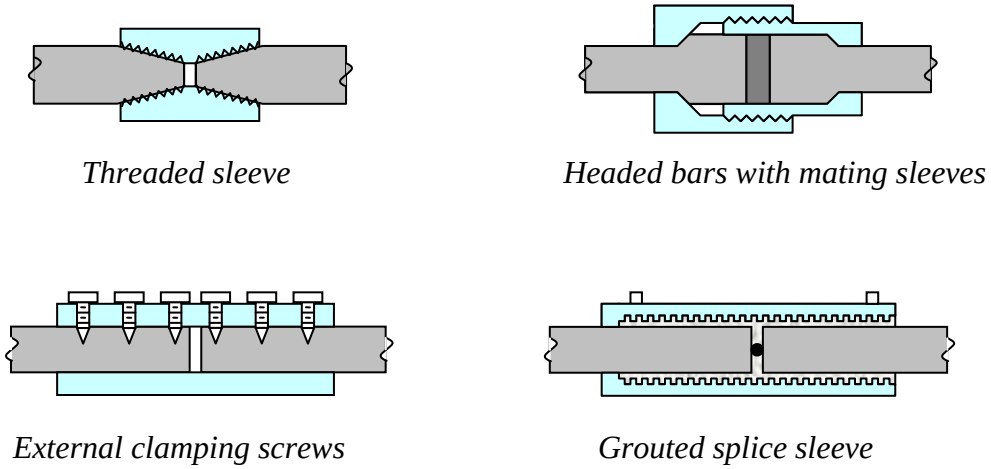

Figure 2 Bar coupler types

Of these coupler types, the most commonly used is the grouted sleeve, either in its original form with two grouted ends or in the combination form of one threaded and one grouted bar. The sleeve is larger than the bar, thereby allowing more generous tolerances on location and alignment than are possible with the systems based on mechanical connection.

The sleeve is typically made of cast steel, and has lugs on the inside to increase the bond between grout and sleeve. The connection can be configured and made in many different ways, examples of which are shown in Appendix A. An example is shown in Figure 3 and the critical components are indicated. Reinforcing bars extending from the face of one precast member are inserted into steel sleeves that are cast into another. Grout is pumped into the sleeve through the lower inlet port until it emerges out of the upper vent. By this means the operator can be sure that the void is completely full of grout. The commercially available sleeves require the use of proprietary, high-strength grout to achieve the necessary bond strength.

A restriction, such as a pin, at mid-height of the sleeve ensures that the embedded bar is correctly located longitudinally in the sleeve. The length of the bar projecting from the member to be connected is critical. If the projection is too short, the connection will not be able to transfer the full tension strength of the bar. If it is too long the elements will not fit.

Often, a grout pad is also needed between the two connected members. This may be provided either by buttering one face with an appropriate mortar prior to bringing the two concrete faces together, or by setting the member on shims and pumping grout into the gap between the members. The interface may be grouted at the same time as the sleeve, or in a separate operation prior to filling the sleeves. The latter approach provides greater certainty that leaks at the interface will not occur when grouting the sleeve itself, but also leads to the

possibility of some grout entering the sleeve prematurely and blocking the inlet port. Sealing washers are available that fit around the bar to block access to the sleeve for that purpose. Their success in doing so is operator-dependent. Grouting the interface bed and the sleeves at the same time saves an additional operation but carries the risk that one sleeve may become blocked, in which case the entire connection would have to be cleaned out and re-grouted.

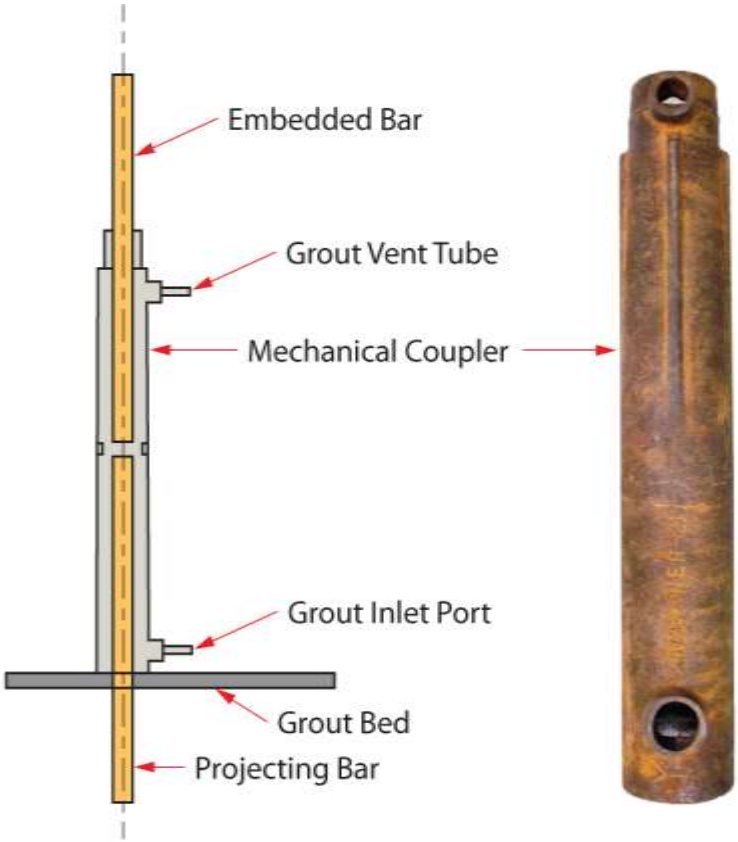

Figure 3 Typical grouted sleeve and example coupler

The bar coupler connection type can be used in the following locations.

- Footing to column
- Splices for column segments or cap beam segments
- Column to cap beam

Material Requirements

Material requirements that are common to several connection systems are given in the general section. Those specific to bar coupler systems are discussed below.

Bar Coupler Hardware. Most bar couplers are proprietary products. Each manufacturer supplies documentation and detailed requirements specific to their product.

Grout. The grout used in grouted splice sleeves is proprietary and specific to each manufacturer. For additional discussion of grout, see the materials requirements in the general section.

Construction Risk

Bar coupler connections offer moderate construction risk in most circumstances, and are assigned a risk value of -1, implying a slightly higher risk than CIP construction. The performance potential in all categories is shown in Table 1.

The major variables to consider for constructability of a connection are as follows.

- Number of bars
- Number of precast elements to be joined simultaneously
- Location of the connectors within the cross section

Precast Fabrication. Projecting bars must be located correctly so that the bars projecting from one member align with the ducts in the other member. This alignment is made easier by using the same template (or two matching templates) for placing the bars in one element and the couplers in the other.

When connection bars are located in the interior of the column rather than around the perimeter, accurate placement is more difficult because the bars cannot be wired to the spiral or hoops. In these situations, special measures, such as a bar grid acting as an internal template, may be needed.

To provide the required cover around bar couplers, the reinforcing bars must be located farther within the cross section than would be the case in CIP construction. Additionally, the dimensions of the transverse reinforcement need to be different in the coupler versus bar zones. This becomes necessary when the bar couplers are located in the column. The problem is exacerbated when oversized sleeves are used, for example, to provide greater placement tolerance on site.

Site Erection. Use of fewer bars simplifies fit-up on site, but may mean using larger bars. The bar size may be limited by anchorage considerations.

Grouted sleeves typically have a lateral tolerance of approximately +/- 0.5 inch, depending slightly on bar size. Oversize sleeves increase the site tolerances, but the space between reinforcing bars in the precast element may limit sleeve size.

When connecting a bent cap to multiple columns, aligning the bars and sleeves, is more difficult than for a single column.

The grouting procedures should be planned as an integral part of the erection procedure. Because visual inspection of the sleeve or interface to be grouted is generally not possible, methods for ensuring complete filling are necessary.

Connections made using the screw coupler type need to be placed very accurately to align screw threads. They are not widely used at present, but the California Department of Transportation (Caltrans) is considering the use of such connections. A short "fuse bar" is connected to the main bars above and below it, using threaded sleeves. The detail is shown in Appendix A. It was developed in response to difficulties in inspecting the grouting of the more widely used grouted sleeves.

Seismic Performance

Bar coupler connections may be designed to provide energy-dissipating or deformable connections, although test data supporting these uses has not been developed in the United States. This type of design would typically be used between the footing and column or column and cap beam. When used to splice precast column segments or precast cap beam segments, the connection will typically function as capacity-protected.

On account of the strengths and weaknesses described in the following discussion, bar coupler connections are assigned a seismic performance potential value of -1 (slightly worse than CIP construction).

Test Results. Some grouted splice sleeves have been experimentally tested under seismic conditions in Japan (Splice Sleeve Japan, Ltd., Undated). A range of sleeve types were tested under high-cycle fatigue in NCHRP 10-35 (Paulson and Hanson 1991). Test results and future research needs are discussed below.

In an undated Japanese report (believed to be from the 1970s), tests were conducted to explore the ductility of grouted splice sleeve connections when used in beam and column systems (Splice Sleeve Japan, Ltd. Undated). The majority of the tested specimens used grouted splice sleeves at mid-height of the column, which is an area of low demand for both strength and ductility. Only two specimens examined the performance of grouted splice sleeves located in or adjacent to the column plastic hinge zone. One specimen placed the sleeves in the end of the column, and the other placed them in the cap beam. The specimen with the sleeves in the plastic hinge zone retained 80% of its maximum strength at approximately 3 to 4% drift. The displacement ductility was between 4 and 5. The performance of the connection with sleeves in the cap beam was slightly better, with 80% strength at 4 to 5% drift and displacement ductility between 5 and 6. These values are comparable to what might be expected in a CIP system. No subassemblage tests under cyclic loading are known to have been performed in the United States.

NCHRP 10-35 (Paulson and Hanson 1991) tested in air (with no surrounding concrete or reinforcement), a variety of welded and mechanical bar splices, including grouted splice sleeves, to determine their high cycle fatigue limits under constant amplitude cyclic loading. The grouted splice sleeves demonstrated the best fatigue performance, with a higher fatigue stress limit than the other coupler types.

At least one study had tests performed on these bar couplers in air under monotonic high-strain-rate conditions indicative of blast design conditions (Rowell et al. 2009). The strain rates were only moderately higher than those expected for seismic conditions and several of the couplers failed in the cast-steel connector itself. While the test conditions were not identical to those expected in a typical seismic application, the need for more extensive testing is clear.

Energy Dissipation. Bar coupler connections have been used in plastic hinge zones where they are expected to dissipate energy if the structure is designed to provide energy dissipation (Utah DOT 2009a). However, no evidence, apart from the Japanese tests described above, is known to support their use in such energy-dissipating applications.

Strain Concentrations. Cast steel sleeves are very stiff axially, and typically remain elastic and provide an excellent bond. Thus, little inelastic deformation of the bar-coupler system will occur within the coupler itself, and almost all of it must take place in the bar outside the coupler. The distribution of bar strains is likely to influence the performance of the connection. To illustrate the issue, consider a column to footing connection in which the sleeve is cast into the column. The moment decreases with distance up the column, so the bar stress does as well. Consequently, the stress at the upper end of the sleeve is likely to be low enough that little yielding will occur in the bar at that location. This is especially true if the plastic hinge length of the column is short compared with the sleeve length. The majority of the inelastic deformation must then take place in the bar in the footing, and the reinforcing details must be adequate to prevent fracture. No studies that investigated this issue were found. It needs further study, particularly for elements that are large compared with the bar size, because even a modest angular rotation at the interface leads to a relatively large axial deformation in the bar.

Post-Earthquake Inspectability

The post-earthquake inspectability of bar coupler connections is similar to that of CIP connections, so a value of 0 is assigned. In both cases, an investigation for fractured bars (or couplers) would probably require removal of some concrete to permit visual inspection. In that case, the procedure would be less invasive if the bars were located near the surface of the element than if they were in the middle of the cross section.

Post-Earthquake Reparability

The ease of post-earthquake repair is also likely to depend on the coupler type. Repair of a grouted sleeve would be very difficult. Some of the mechanical couplers that depend on threaded parts would be easier, though still difficult, to repair. For example, in the Caltrans design shown in Appendix A, the damaged fuse bar could be removed and a new one installed. The threads would have to be cleaned, a new fuse bar machined to the exact length required, and the embedded bars, if bent, would have to be realigned so the threads would match. While it is possible to envisage a method of repair, installing it might be sufficiently difficult and time-consuming that rebuilding might be preferable.

Durability

The durability of a bar coupler connection is likely to depend on the coupler type and the concrete or grout that protects it from moisture sources. If moisture penetrates to the coupler, types that depend on threads or metal-to-metal contact are likely to suffer more extensive corrosion than grouted sleeves.

At the connection between a column and a footing or between a column and a bent cap, there is a grout pad at the precast member interface instead of a cold joint between CIP concrete pours. The susceptibility to water infiltration, and consequent corrosion, of these two joint types is generally similar. Depending on how the interface in the precast system is grouted, local voids are possible, in which case the durability of the precast system may be somewhat inferior to that of the CIP system. However, the precast columns themselves are likely to be constructed as well as or better than their CIP counterparts. Thus, a durability value of 0 (equal to CIP construction) is assigned.

Performance and Time Savings Evaluation

Performance scores were assigned based on the comments outlined above regarding construction risk, seismic performance, inspectability, and durability (see Table 1). In the table, the shaded cells indicate the composite performance expected as a group. Additionally, the numbers indicate the scores of individual connections, and the number corresponds to the identifying number for the connection in the corresponding appendix. For instance, the bar coupler type of connections include seven examples evaluated in Appendix A. In the appendix, the connections are denoted by BC-1 through BC-7, but in Table 1 only the connection number appears. The numbers are provided in the table simply to indicate the range of scores for the connection type. The numbers also indicate how a particular connection scored relative to other connections evaluated for the group. The construction risk for bar coupler connections is less favorable than CIP construction because of the possibility of the coupler not being correctly or fully engaged. This would occur, for example, if a grouted splice sleeve was not filled properly. The seismic performance is rated lower than CIP construction because the test data for bar coupler connections is incomplete.

Table 1 Performance Potential of Bar Coupler Connections

Performance Potential	**Definition Relative to CIP**	**Construction Risk Value**	**Seismic Performance Value**	**Durability Value**	**Inspectability Value**
+2	Much better				
+1	Slightly better				
0	Equal	6	6 7	1 2 3 4 5 6	1 2 3 4 6 7
-1	Slightly worse	1 2 3 4 5	1 2 3 4 5	7	5
-2	Much worse	7			

The time savings for bar coupler connections was rated as +2 (much better than CIP) (see Table 2). The estimated savings is approximately 11 days for a bent in which the columns and cap beam are precast. The majority of that savings comes from the cap beam.

Table 2 Time Savings Potential of Bar Coupler Connections

Time Savings Potential	Definition Relative to CIP	Value
+2	Much better	1 2 4 5
+1	Slightly better	3 6
0	Equal	
-1	Slightly worse	7
-2	Much worse	

Technology Readiness

Use in Practice. Grouted sleeve connections are widely used for bridges in Utah, which contains moderate-to-high seismic regions. They are also widely used in the building industry throughout the country. They are part of the standard Utah DOT precast substructure details and their use is discussed in the *UDOT Precast Substructure Elements Manual* (Appendix A, Utah DOT 2009a and 2010).

The Florida DOT used grouted splice sleeves on the Edison Bridge near Fort Myers (Appendix A, Culmo 2009).

A recent study by the University of Alabama (with input from the Alabama DOT) selected grouted splice sleeves to connect precast bridge substructure elements and developed details utilizing them (Fouad et al. 2006, Appendix A). The researchers determined that grouted splice sleeves offered the most flexibility for ease of prefabrication and site erection compared to grouted pockets, grouted ducts, and bolted connections.

Despite the widespread deployment of grouted splice sleeves, test data for them under inelastic cyclic loading is very sparse. Furthermore, detailed investigations of the distribution of deformations in the region surrounding the coupler and the consequent effects on strain demands were not found. Test data was also not found for threaded coupling systems under inelastic cyclic loading.

Design Guidance. The AASHTO LRFD Design Specifications require that a mechanical coupler develop 125% of the specified yield strength of the connected bar. However, it does not specifically address the use of couplers in plastic hinge regions. Therefore, the Utah DOT references the American Concrete Institute (ACI) 318 requirements for mechanical splices in special moment frames (ACI 318-08 Section 21.1.6). ACI 318 classifies connectors in plastic hinge zones as “Type 2” and requires that they be designed to develop the specified tensile strength of the bar. The ACI 318 commentary states that “if use of mechanical splices in regions of potential yielding cannot be avoided, there should be documentation… on the ability of the Type 2 splice to be used to meet the specified performance requirements.” The Japanese tests on grouted splice sleeves suggest that they can meet performance requirements of cyclic strength and ductility (Splice Sleeve, Japan, Ltd). However, the Utah DOT acknowledges that the behavior of couplers located in plastic hinge zones needs to be verified and AASHTO code provisions for their use should be developed.

The wording of the coupler strength requirements leaves room for undesirable behavior, such as brittle failure of the coupler rather than ductile yielding of the bar. The specified strength of the bar is normally taken to mean the value from the relevant American Society for Testing and Materials (ASTM) specification, such as A706. However, that value is a lower bound (80 ksi for A706), with no upper bound. In practice, A706 bars often have a tensile strength of 100 ksi. Thus, the coupler may satisfy the formal strength requirements by being stronger than a bar with f_u = 80 ksi, but because the bar may legally have a yield strength of 78 ksi, it is possible for the coupler to fracture at a load that is only 2.5% above the bar yield, and well below the bar fracture load. Such coupler failure is likely to be quite brittle. The brittle coupler failures found in the high strain rate tests by Rowell et al. (2009) emphasize the need for testing to ensure this desired behavior.

It should be noted that ACI specifies that, for ASTM A706 reinforcement, the actual tensile strength must be no less than 1.25 times the actual yield strength. That code also allows the yield strength of the bar to be up to 18 ksi greater than the specified value, or 78 ksi for grade 60 bars. The implication is that a tensile strength of 1.25*78 = 97.5 ksi is permissible. This is greater than the 80 ksi minimum tensile strength specified explicitly in ASTM A706.Logically, this high permissible strength should be used in evaluating the strength of any Type 2 bar coupler to ensure that the coupler is stronger than the bar, such that ductile yielding in the bar occurs prior to failure of the coupler for all legally usable bars. The brittle coupler failures found in the high strain rate tests by Rowell et al. emphasize the need for testing to ensure this desired behavior.

ACI Committee 550 (Precast Concrete) also has a report on emulative construction, for which grouted splice sleeves are a valuable tool (ACI Committee 550 2009).

Technology Readiness Level Evaluation. Table 3 provides a summary of the TRL levels and of the estimated percentage of development that has been accomplished to date for the connection group. Because this rating applies to the entire group, it is a composite of the status of the individual couplers.

Table 3 Technology Readiness Level Evaluation of Bar Coupler Connections

Technology Readiness Level (TRL)		**% of Development Complete**			
TRL	**Description**	**0-25**	**25-50**	**50-75**	**75-100**
1	Concept exists				
2	Static strength predictable				
3	Non-seismic deployment				
4	Analyzed for seismic loading				
5	Seismic testing of components				
6	Seismic testing of subassemblies				
7	Design and construction guidelines				
8	Deployment in seismic area				
9	Adequate performance in earthquake				

Summary

Bar coupler connections are being widely used in practice; however, their ability to sustain cyclic inelastic deformations is not well documented. Therefore, the connection type is considered constructible and promising for seismic use, but further experimental testing is strongly recommended to verify its performance.

Areas in which additional research is needed include the following.

- Inelastic cyclic performance – drift capacity
- Influence of coupler on bar strain distribution
- Influence of coupler location and orientation on inelastic performance

Grouted Ducts

Description

In grouted duct connections, reinforcing bars extending from one precast member are inserted into ducts cast into the second, and the ducts are then grouted. The hardened grout anchors the bar in the duct. The force from the bar is transferred into the surrounding concrete, and, possibly, to one or more bars lap-spliced to the outside of the duct. That load transfer mechanism contrasts with the one found in bar couplers, in which the load is transferred from one bar to another bar that is collinear with the first. A grouted duct connection can be configured in many different ways, examples of which are shown in Appendix B. Application of column to cap beam connections using grouted ducts are provided in Figure 4 and Figure 5, and a sample connection is shown in Figure 6.

Figure 4 Grouted duct cap construction and cap placement (Matsumoto 2009b)

Figure 5 Grouted duct lower stage cap erection (Washington State DOT SR 520/SR 202)

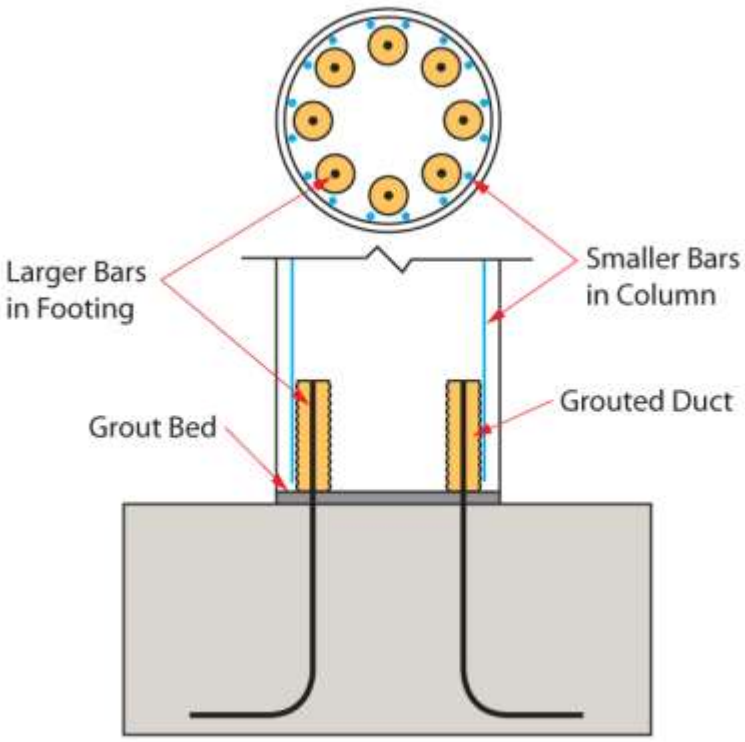

Figure 6 Typical Grouted Duct

This connection type can be used in the following locations.

- Pile to pile cap
- Spread footing or pile cap to column
- Column to cap beam
- Splice between column segments or cap beam segments

Pile to Pile Cap. Grouted ducts are also used to connect piles to pile caps. The construction procedure and detailing is similar to a column to cap beam connection. One drawback of using grouted ducts in this application is that the uncertainty of the pile location might require tolerances larger than what the duct can provide. These connections are typically designed as capacity-protected.

Footing to Column/Column to Cap Beam. Grouted duct connections in these locations can be designed to provide energy dissipation and deformability with either the full section cyclic moment capacity or partial moment capacity depending on the location and number of connection bars. The implications of locating the ducts in the column versus the cap beam or footing are discussed in the Construction Risk section below.

Splice between Column Segments or Cap Beam Segments. Splices can be used to connect column or cap beam segments, thereby reducing the size and weight of individual precast elements. These connections are designed as capacity-protected.

Material Requirements

See the materials requirements in the general section. Materials specific to grouted duct systems are discussed below.

Ducts. The most common ducts used for this connection type are made of galvanized steel. Several different wall surfaces are available.

- *Corrugated* – These are available in diameters larger than 6 inches, have relatively thick walls, and aggressive corrugations.
- *Post-tensioning* – These are generally available in diameters less than 6 inches, have thinner walls, and lower profile ribs.
- *Smooth* – These are not recommended due to the low level of bond.

In tests using steel post-tensioning ducts (Raynor et al. 2002) and steel corrugated ducts (Steuck et al. 2009), the failure surface was located at the bar-grout interface, not the grout-duct interface. This suggests that, in both duct types, the bond to the duct was better than to the bar, so it was adequate.

Plastic ducts are widely used for post-tensioned tendons, and have been studied for use in grouted bar connections as an alternative to steel because they are less susceptible to corrosion. However, pullout tests of polyethylene and polypropylene ducts show that those materials provide anchorage that is inferior to that of steel ducts (Brenes et al. 2006). They recommend an embedment length increase of 30% when using plastic instead of steel ducts. It should be noted that those tests were conducted using a single duct diameter and bar diameter; therefore, the recommended embedment length equation does not account for the effect, if any, of the relative size of the bar and duct.

Construction Risk

Grouted duct connections offer moderate construction risk in most circumstances and are assigned a risk value of -1, implying a slightly higher risk than CIP construction. The major variables to consider are as follows.

- The number of bars
- The size of the ducts relative to the bars
- The number of precast elements to be joined simultaneously
- The location of the connectors within the cross section.

Precast Fabrication. Projecting bars and embedded ducts must both be located correctly, so that the bars projecting from one member align with the ducts in the other member. This alignment is made easier by using the same template (or two matching templates) for placing the bars in one element and the ducts in the other.

When connection bars are located in the interior of the column rather than around the perimeter, accurate placement is more difficult because the bars cannot be wired to the spiral or hoops. In these situations, special measures may be needed, such as a bar grid acting as an internal template.

To provide the required cover around ducts, the reinforcing bars must be located farther within the cross section than would be the case in CIP construction. Additionally, when the ducts are located in the column, the diameter of the spiral needs to vary between the duct versus bar zones. This problem is exacerbated when oversized ducts are used. The same constraint is true of the grouted-sleeve type of bar couplers, in particular, and true to some extent of all bar couplers.

Additionally, splices of internal bars to the ducts must be placed so they have the correct length, and grout ports and vent tubes must be correctly placed and clear of all blockages.

Site Erection. Use of fewer bars simplifies fit-up on site, but may mean using larger bars. The bar size may be limited by anchorage considerations. However, large ducts are desirable for site erection, but the space between reinforcing bars in the precast element may limit duct size.

For piles that are cut off after being driven to refusal, holes for installing projecting bars must be formed by on-site drilling rather than by casting a duct into the precast member. However, if sufficient geotechnical data is known about likely pile tip elevations, then ducts can be cast into the pile for grouting dowels. This would avoid an additional operation and, possibly, a specialist subcontractor.

Aligning the bars projecting from the column with ducts in the bent cap is more difficult for a system with many columns than for a single column. The grouting procedures should be planned as an integral part of the erection procedure. Because visual inspection of the duct or interface to be grouted is generally not possible, methods for ensuring compete filling (e.g., a good venting system) are necessary.

Grouting and Duct Location. In a footing to column connection, the duct may be located in either member. However, the construction risk is likely lower if the duct is placed in the column. Placement in the footing requires that either grout tubes must be embedded in the footing to permit subsequent pressure-grouting from the bottom of the duct, or the duct must be filled with grout prior to placement of the column. It also carries the risk that the duct will fill with water during wet weather and need to be dried out prior to installation of the column. The former requires additional work (and introduces the risk that the tubes will be damaged while casting the footing), while the latter would create the need to clean out the ducts and start the operation again if something did not fit. Thus, placement of the duct in the column is likely to incur less risk, but it places the splice in the plastic hinge zone, which may affect the seismic performance.

In a column to cap beam connection, the constraints are different, and placement of the duct in the cap beam is likely to prove the better choice. Placement in the column would require stub bars to be cast into the cap beam, which would complicate handling and cause the need for an additional splice to the main column bars, and location of the vent tubes would be difficult. By contrast, locating the duct in the cap beam means that the column bars can be continued without splicing and the grout can either be pumped in through grout tubes at the bottom of the duct (preferable for ensuring complete filling) or poured into the open top of the duct. The open top of the duct serves as a large vent tube.

Similar evaluations should be made for grouted duct connections at other locations. In all cases, the solution adopted will depend to some extent on the contractor's capabilities, but these guidelines provide a basis for the decision. Furthermore, because complete grouting is critical, the grout tubes should be placed in locations where it is possible to verify that they are clear prior to erecting the precast elements.

Seismic Performance

Grouted duct connections may be designed to provide energy dissipation and deformability with either the full section or partial section cyclic moment capacity, depending on the location and number of connection bars. Such a design, with significant inelastic deformation capacity, would typically be used between the footing and column or column and cap beam. Grouted duct connections used to splice precast column segments or precast cap beam segments are typically located where they act as capacity-protected elements, with no need for inelastic deformation capacity.

Grouted ducts are also used to connect piles to pile caps and these connections are also typically designed as capacity-protected when columns are supported on the caps. The inelastic response is forced into the column and the foundation remains elastic.

Grouted duct connections receive a seismic performance value of 0, implying a similar performance to CIP construction.

Energy Dissipation. When grouted duct connections are designed to provide energy dissipation and ductility capacity, spiral reinforcing or ties should be provided in order to mitigate bar buckling and concrete spalling in the plastic hinge region.

Grouted duct connections have been experimentally tested in several configurations and locations. Tests in which the connection strength is nominally equal to that of the adjacent members have been performed at California State University, Sacramento (Matsumoto 2009b), the University of Washington (Pang et al. 2010), and the University of Bergamo, Italy (Riva 2006). Key results from these tests are reported below.

Matsumoto 2009b. The testing conducted as part of NCHRP 12-74 showed emulative connection performance with more distributed cracking and yielding in the column than Pang's large-bar precast connection. All of the column reinforcing bars crossed the beam-column interface and were anchored into grouted ducts, as shown in Figure 7. Therefore, the flexural strength did not vary between the joint interface and the column, promoting more distributed cracking than the large-bar precast connection described above. The resistance of each specimen dropped to 80% of its peak value at a drift ratio between 5 and 6%.

In the NCHRP 12-74 study, the researchers noted a problem with early deterioration of the grout bedding layer and suggested providing reinforcement in it to improve ductility. (Restrepo et al. 2010). In research conducted at NIST (Stone et al. 1995), fibers were used to reinforce the joint, and were successful in preventing the grout from deteriorating.

Pang et al. (2010). Experimental testing of connections with large bars grouted in large ducts has shown that their seismic performance is globally similar to that of CIP connections , in that similar drift levels can be achieved with both systems if other details (e.g., bar size, spiral spacing, etc.) are the same. The test specimen is shown in Figure 8. The resistance of each specimen dropped to 80% of its peak value at a drift ratio between 6 and 7%.

The flexural cracking in CIP connections is typically distributed over the plastic hinge length. In the large-bar precast connection, cracking and connection rotations were more concentrated at the member interface. However, in those tests, the columns contained supplementary longitudinal bars that stopped at the interface in addition to the main column bars. They were supplied to satisfy AASHTO bar spacing requirements and stopped at the interface to avoid adding flexural strength to the connection. Therefore, the presence of these additional bars, rather than the fact that the system was precast, might have promoted the concentration of cracks at the interface.

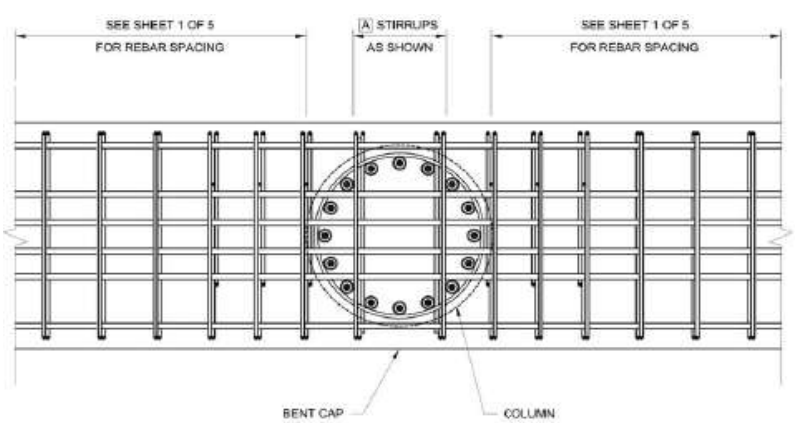

Figure 7 Column vertical reinforcement in ducts (Matsumoto 2009b)

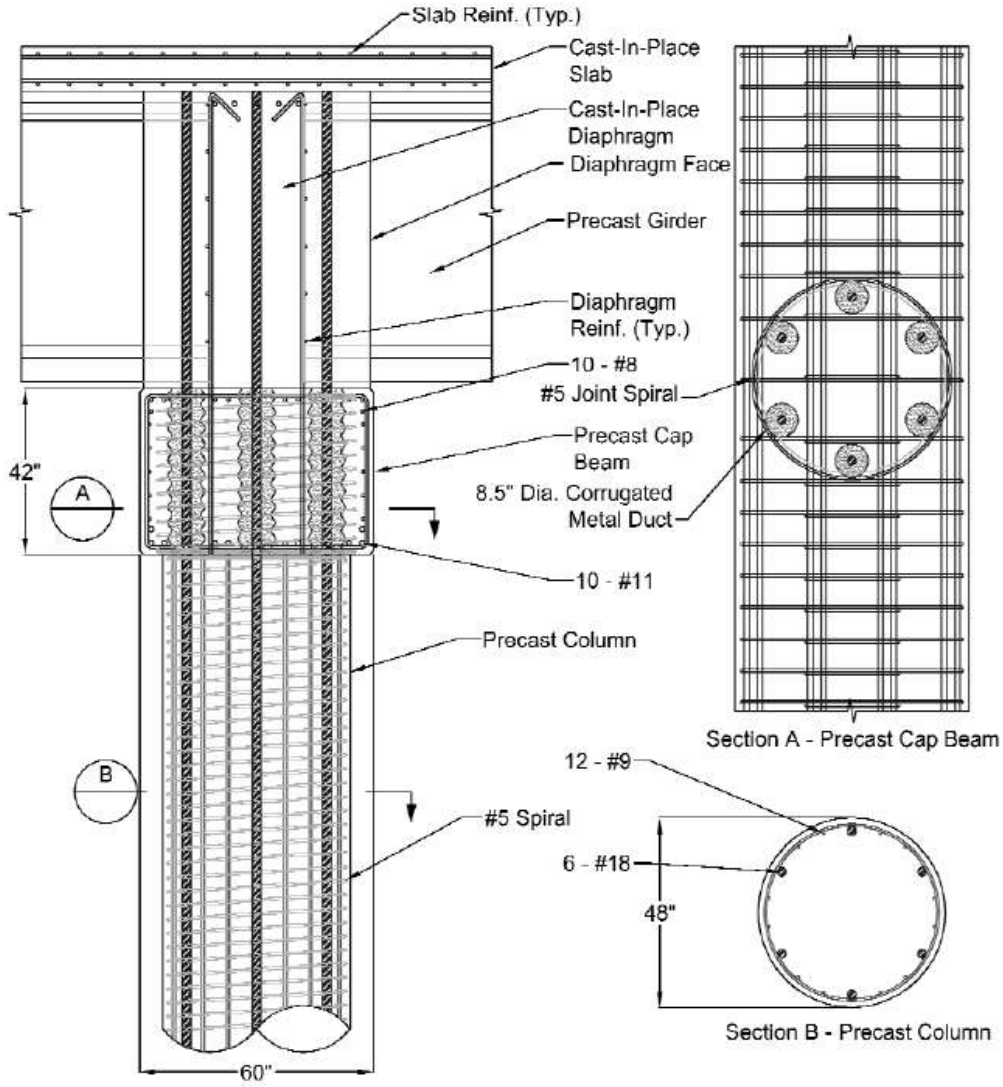

Figure 8 Large bars in large ducts (Pang et al. 2008)

Riva 2006. Riva tested the cyclic performance of column to foundation connections using three grouted duct specimens. For comparison, one CIP control specimen and one member socket specimen were also tested. The ducts were made of corrugated aluminum and located in the column. The strength of the grouted sleeve connection specimens degraded considerably due to progressive damage to the 3/4-inch-thick interface grout layer. As the grout deteriorated, the compressive forces from the bending couple could be resisted only by the vertical bars and the grout confined in the aluminum ducts. This damage led to more pinched hysteresis loops and slightly less energy dissipation than the CIP and member socket specimens. The reduced strength due to grout damage led to the concentration of rotational deformation at the column base and an absence of damage and distributed curvatures along the length of the column.

The additional strength provided by the column bars lapped with the grouted ducts might have also contributed to this concentration of damage.

The strength at 2.5% drift was 90% of the maximum. At 5% drift, the strength was two-thirds of the maximum. The grouted duct specimens had a higher displacement capacity than the CIP or member socket specimens, reaching 6.5% drift before bar failure, compared to 5 to 5.5% for the other specimens. This was attributed to the confinement provided by the aluminum ducts surrounding the grout, which prevented the buckling of the reinforcing bars (see the Member Socket Connections section for additional discussion.)

In all of these tests, the deformations were concentrated near the interface. This occurred because the moment demand decreased with distance from the interface, so the demand/capacity ratio, which controls the distribution of deformation, was greatest at the interface. It is evident that even when the connection strength is equal to the column flexural strength, as was the case in the NCHRP 12-74 testing, deformation will be concentrated at the interface because the demand is highest at this location.

Bars grouted in ducts located in the interior of the column cross section have been used by the Texas DOT and other designers (Appendix B) and tested by Matsumoto et al. (2001). Those connections had lower flexural strength and stiffness than did the adjacent members because the total area of the bars crossing the interface was less than that of the main column bars. Consequently, the deformations were concentrated at the interface, where the section was weakest and the demand was highest. The connection was tested monotonically, but not cyclically, and displayed modest rotational ductility with connection bars achieving strains in excess of 1 percent.

The detail could be adapted for use in seismic regions, but several questions would need to be addressed.

- For what flexural strength should the connection be designed? Use of only partial section flexural capacity reduces the lateral capacity of the bent.
- Does placement of the connecting bars in the interior of the cross section reduce the rotational ductility? The surrounding concrete improves confinement and may reduce the development length. Also, if the connection strength is less than that of the column, the bar strains will likely be further concentrated at the interface.
- Some longitudinal steel would be needed around the perimeter of the column, but not crossing the interface, in order to support the spiral and to protect the concrete there from premature crushing. How much is needed and how should it be detailed?

Strain Concentrations. In precast systems, rotations and strains may be concentrated at the connection interface. Ensuring an adequate plastic hinge length, including strain penetration effects, is important for achieving ductile behavior. A plastic hinge length that is too short can lead to strain concentrations and premature bar fracture under cyclic loading.

Ducts confine the grout that they contain; the confinement shortens the development length of the bar, concentrating the bar strain at the interface. The effect is more important for small bars, which have a shorter development length. For a given connection rotation, a deeper

member will be associated with a larger crack width. Because a large crack width and a short debonded length lead to large strains, the combination of small bars in large connections should be avoided.

The strain concentration may be relieved by debonding the bar locally (e.g., wrapping it with tape or encasing it in a plastic pipe), but the need for deliberate debonding remains open to debate. While the decrease in development length due to confinement has been well documented (Matsumoto et al. 2001, Concrete Technology Associates 1974, PCI Design Handbook 2004, Raynor et al. 2002, Steuck et al. 2009), there is also evidence that, under most circumstances, cyclic axial stressing of the bar causes sufficient "natural" debonding to overcome the strain concentration and prevent bar fracture. One contributor to the overall debonding effect is the pullout cone of grout that forms at the attack end of the bonded region, illustrated in Figure 9. The depth of the cone is related to the diameter of the duct, so the consequent relief of strain concentration may be greater in larger ducts.

Recent work by Gurbuz and Ilki (2011) on bars anchored with epoxy in holes drilled in low-strength concrete, shows that the bars have higher pullout strength and are more ductile if they are debonded for a short distance near the interface. It is possible that this behavior would also be found in bars anchored using grout rather than epoxy and in other concrete strengths.

Figure 9 Cone pullout of bar with shallow embedment in grouted duct

Some evidence exists to suggest that strain concentration is also affected by the amount of concrete surrounding the duct, because that concrete further confines the bar-grout system. Thus, a duct embedded in a spread footing is likely to provide better confinement and a shorter development length for a bar grouted into it than a duct embedded in a column. The logic behind this behavior is that a mass of concrete provides stiffer confinement than conventional transverse steel in a smaller cross section element. The transverse steel is not as stiff because the concrete must crack to permit the transverse steel to elongate and develop a significant confining effect. If this behavior were certain, it might affect the decision to place the duct in the column or footing.

However, no quantitative data are available on the effect, in which case the duct placement should be selected on the basis of constructability constraints (see the Construction Risk section).

Transfer of Forces in the Duct Region. Some bars are likely not to be centered in their ducts. Tests by Brenes et al. (2006) determined an average reduction in bond strength of 17% for eccentric bars. Raynor et al. (2002) tested one specimen with a bar deliberately set off-center, and found little difference in strength.

Brenes et al. (2006) also observed a group pullout effect when adjacent connectors were simultaneously loaded in tension. The strength of individual connections was reduced by between 30 and 40%. Brenes et al. also reported that spiral transverse reinforcement around duct groups, which is included to provide a confining force on the concrete, does not alter connection performance.

Post-Earthquake Inspectability

After a potentially damaging seismic event, the inspectability of grouted duct connections is similar to that of CIP connections and so is assigned an inspectability value of 0. For example, an investigation for fractured bars in the adjacent member is the same as for CIP and would probably require removal of some concrete for the member with ducts. In that case, the procedure would be less invasive if the bars are located near the surface of the element than if they are in the middle of the cross section.

Post-Earthquake Reparability

The reparability of grouted duct connections is similar to that of CIP connections. Grouted ducts provide no special repair access to damaged reinforcing steel. The surrounding concrete must be removed to access reinforcing bars. However, Riva (2006) concluded that grouted duct connections are more easily reparable than member socket or CIP connections because damage is localized at the grout layer with relatively minor damage along the length of the column.

The localization of the damage is deemed to be a relatively minor issue, compared with the costs of mobilization to undertake a repair at all, so the grouted ducts are, therefore, assigned a reparability value of 0.

Durability

The durability of grouted duct connections is about the same as that of CIP construction and depends largely on the quality of the grouting. At the connection between a column and a footing or between a column and a bent cap, there is a grout pad at the precast member interface instead of a cold joint between CIP concrete pours. The susceptibility to water infiltration and consequent corrosion of these two joint types is generally similar. Depending on how the interface in the precast system is grouted, local voids are possible, in which case the durability of the precast system may be somewhat inferior to that of the CIP system.

To improve durability, Brenes et al. (2006) encouraged consideration of the following measures: "Use of epoxy-coated connectors, use of plastic ducts, terminate the vertical ducts before reaching the top of the cap, embedding the top of the column (or pile) in the cap, use an external sealant."

Performance and Time Savings Evaluation

Performance grades were assigned based on the comments stated above regarding construction risk, seismic performance, inspectability, and durability. The construction risk was rated as less favorable than CIP construction because of the possibility of difficulties with grouting the ducts. They are shown in Table 4.

Table 4 Performance Potential Evaluation for Grouted Duct Connections

Performance Potential	Definition Relative to CIP	Construction Risk Value	Seismic Performance Value	Durability Value	Inspectability Value
+2	Much better				
+1	Slightly better				
0	Equal	2 3	1 2 3 4 5 6	1 2 3 4 5 6 7	2 3 5 6
-1	Slightly worse	1 4 5 6 7	7		1 4 7
-2	Much worse				

The time savings potential was evaluated as much better than CIP concrete, especially if the cap beam is precast (see Table 5). The corresponding score was +2.

Table 5 Time Saving Potential Evaluation for Grouted Duct Connections

Time Savings Potential	Definition Relative to CIP	Value
+2	Much better	1 2 4 6
+1	Slightly better	5 7
0	Equal	3
-1	Slightly worse	
-2	Much worse	

Technology Readiness

Grouted duct connections have been tested in several different configurations. They have generally been found to perform well, both when designed for a non-seismic region and tested under monotonic load (Brenes et al. 2006, Matsumoto et al. 2008) and when designed for a seismic region and tested under cyclic load (Matsumoto 2009b, Pang et al. 2010).

Use in Practice. Grouted duct connections have been used primarily in non-seismic regions (e.g., Lake Belton, Texas; Lake Ray Hubbard, Texas – Appendix B). Because many of the construction procedures for the connection are the same for both seismic and non-seismic regions, the field experience in non-seismic regions provides a proving ground for the

constructability of the system in seismic regions, and advances the TRL. Individual TRL values are given in Appendix B for different versions of the connection.

In seismic regions, a small number of implementations are known. In the Getty Center tram guideway located in Los Angeles, California, a precast cap beam was connected to one or two CIP columns (Josten et al. 1995). Limited road access on a steep construction site prompted the guideway contractor to change the cap beams from CIP to precast concrete. Because the 1.5-inch-diameter ducts were only slightly larger than the #11 bars extending from the column, a template was used in the field and shop to ensure the correct placement and alignment of bars and ducts. The structure was completed shortly before the Northridge Earthquake of 1994. Horizontal accelerations between 0.24 and 1.82 g were measured at sites within 20 miles of the epicenter. The guideway, located 10 miles from the epicenter, was undamaged by the event (Guarre and Hjorteset 1999). While the structure was undamaged, it should be noted that the moment demand on the grouted duct connection at the top of the column was likely significantly smaller than the demand at the CIP connection at the base.

At the Washington State Route 520/State Route 202 (SR 520/SR 202) interchange (Figure 5), the contractor proposed a similar value engineering change from CIP to precast cap beams. The system finally adopted consisted of two CIP columns and a precast cap beam. Overall cost savings were achieved, despite the need for a large (500 ton) crane on site. The number of longitudinal bars remained the same as in the original CIP design, so insufficient space was available for large ducts.

The large-bar connection system is in the process of being implemented in the new US-12 bridge over I-5 in Thurston County, Washington, for the FHWA's Highways for LIFE program. The contract was awarded in December 2010. The columns are 4-foot square precast, reinforced concrete with eight #14 vertical bars mating with 4-inch-diameter post-tensioning ducts in the precast cap beam. The columns also contain capacity-protected splices made with grouted ducts. These were not necessary for functional reasons, but were included to verify proof-of-concept.

Design Guidance. Design guidance can be found in Brenes et al. (2006), Matsumoto et al. (2001), Matsumoto et al. (2008), and Restrepo et al. (2010).

Technology Readiness Level Evaluation. Grouted ducts have been tested extensively under static loading, and a few tests have been conducted under cyclic loading (Matsumoto 2009b, Pang et al. 2010). Preliminary design guidelines have been formulated for seismic use (Restrepo et al. 2010; Matsumoto et al. 2001, 2008; PCI Design Handbook 2004) and are in the process of refinement. The connection type has been deployed in non-seismic regions and a few times in seismic regions (SR 520, Highways for LIFE). Thus, a TRL of 8 is assigned (see Table 6).

Table 6 Technology Readiness Level Evaluation for Grouted Duct Connections

Technology Readiness Level (TRL)		**% of Development Complete**			
TRL	**Description**	**0-25**	**25-50**	**50-75**	**75-100**
1	Concept exists				
2	Static strength predictable				
3	Non-seismic deployment				
4	Analyzed for seismic loading				
5	Seismic testing of components				
6	Seismic testing of subassemblies				
7	Design and construction guidelines				
8	Deployment in seismic area				
9	Adequate performance in earthquake				

Summary

Grouted duct connections have been used on projects in both non-seismic and seismic regions. Additionally, significantly more research has been conducted on grouted ducts than on other connection types.

As noted in the seismic performance section, the use of fibers to reinforce the grout bedding layer needs to be confirmed. The question of strain distribution, which is affected by the relatively rigid ducts, is similar to the one raised in the grouted splice sleeve evaluation and also merits further investigation.

Areas in which additional research is needed include

- Effect of duct size on anchorage length
- Influence of duct location on cyclic performance (e.g., in plastic hinge zone versus adjacent)
- Implications of lap splicing column bars to connection bars
- Impact of additional bars on plastic hinge region cyclic performance
- More on influence of duct material, off-center bar, group pull-out effects, bedding layer reinforcement

Pocket Connections

Description

Pocket connections are constructed by extending reinforcing from the end of one precast structural member, typically a column or pile, and inserting it into a single preformed pocket inside another member. The connection is secured by using a grout or concrete closure pour in the pocket (Figure 10). A grout/concrete bedding joint can be used to provide adjustability. This connection differs from the member socket connection, in which the whole end of a member is embedded in the other. Pocket connection examples can be found in Appendix C.

Special consideration must be given to the detailing of the pocket and how it will be formed. The transfer of forces between the embedded member and the surrounding member occurs at the pocket perimeter. A steel duct can be used as a stay-in-place formwork that provides joint reinforcement and confinement to the pocket concrete. This duct should be placed between the cap beam top and bottom reinforcing bars. An additional piece of formwork, such as a cardboard concrete form tube, must be adhered to the top and bottom of the steel duct to extend the pocket form to the surface of the cap beam. The cardboard concrete form tube can be notched to fit over the reinforcing bars that cross through the pocket (Matsumoto 2009c).

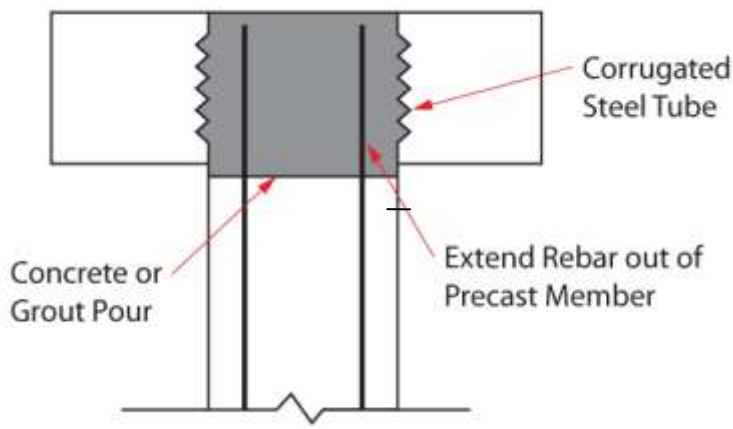

Figure 10 Pocket connection concept

This connection type can be used in the following locations.

- Column to cap beam
- Footing to column
- Pile to pile cap

Column to Cap Beam. The most useful location for the pocket is the column to cap beam connection. Because cap beams that are CIP cannot be rapidly constructed, precast cap beams are considered for the discussion of the column to cap beam pocket connection. The precast cap beam must be formed with a pocket in which to embed the column vertical reinforcement. The cap beam width does not necessarily need to change because the column longitudinal steel can pass through the cap beam rebar. Formwork will have to be built around the base of the pocket to retain the concrete pour and form the bedding layer. The top of the cap beam is easily accessed to perform the closure pour. The cap beam can rest on the column, can be shored until the closure pour is complete, or collars can be used to support the beam while the pocket concrete cures.

Footing to Column. For a pocket connection between the footing and column, the footing is cast with a hole in the center. The column is supported with its projecting bars extending down into the hole, which is then concreted to join the footing and column into a monolithic unit. If the system were configured like the cap beam pocket connection, but upside

down, no space would be available for placing the concrete into the pocket. Special provisions would therefore be necessary.

Pile to Pile Cap. Piles are typically embedded in pile caps, but often only for a short distance (approximately 3 to 6 inches) and projecting reinforcement provides the main connection between the two members. The pile cap reinforcing steel is typically built around the in-situ piles and their extended reinforcement and then the pile cap concrete is CIP. However, over water and in other adverse circumstances, where forming the pile cap might be time-consuming and costly, the pile cap can be precast with a pocket. Such precast caps are typically very heavy and alignment tolerances might be more difficult to achieve given the location uncertainty associated with driving piles.

Material Requirements

See the general section for common material requirements, including grout and reinforcing steel. Materials requirements specific to pocket systems are discussed below.

Concrete/Grout. The pocket must be filled with flowable concrete or grout to complete the connection. Self-consolidating concrete is a viable option.

Reinforcing Steel. A corrugated steel duct can be used for the pocket form. The duct confines the pocket concrete or grout and transfers the bond forces to the surrounding concrete. It also provides joint shear reinforcement.

Construction Risk

Pocket connections offer moderate construction risk in most circumstances and are assigned a risk value of -1, implying a slightly higher risk than CIP construction. The performance potential in all categories is shown in Table 7. Specific risk issues are discussed below.

Precast Fabrication. Column fabrication, handling, and transportation are simplified by having only straight protruding elements. The main bars in precast concrete columns are straight and are developed using straight bar embedment lengths or headed anchors (if tolerances permit) instead of outward facing hooks. These bars cannot have hooks because of potential conflicts with bars passing through the pocket.

The placement of horizontal beam reinforcement that passes through the pocket must be coordinated with the location of the anchorage bars extending from the column to prevent conflicts during site erection. Templates can help coordinate this effort.

The strength of the beam should be checked for temporary handling conditions, during which the pocket would be open.

Site Erection. The construction tolerances provided by pocket connections depend on the size and spacing of the beam and column steel. The vertical bars extending from the column must be aligned to avoid any reinforcement that crosses through the pocket.

A cap beam with a pocket connection will, in general, have to be temporarily supported by a friction collar on the column, column shoring bracket, or other means during the pocket concreting. This could be avoided if the projecting column steel was concentrated near the center and the pocket diameter was less than that of the column.

The gap between the column and cap beam must be sealed prior to casting the pocket. If the cap beam is supported on the rim of the column, provision must be made for either grouting the gap or ensuring that the pocket concrete flows into it.

Seismic Performance

Pocket connections can be designed to provide energy dissipation and deformability in the column. The preferred mode of response is to force the inelastic action into the column and to ensure essentially elastic response in the joint and cap beam, thereby emulating CIP behavior. This energy-dissipating design would typically be used between the footing and column or column and cap beam. Pocket connections used to connect piles to pile caps are typically designed as capacity-protected by forcing the inelastic response into the column above the cap.

Site erection would be facilitated by using a smaller number of larger bars in the column. However, the seismic response of such a system and, in particular, the anchorage of the bars, would first have to be proven. This has been done for grouted ducts with #18 bars, but is not known to have been done for the pocket detail.

Pocket connections receive a seismic performance value of 0, implying a similar performance to CIP construction.

Energy Dissipation. Pocket connections have been experimentally tested when used to connect a column to a cap beam (Matsumoto 2009c, 2009d; Matsumoto et al. 2001, 2008). Some of the conclusions of these tests are included in the seismic performance discussion below.

Matsumoto Cap Pocket Full Ductility (CPFD). Experimental testing at California State University, Sacramento (Matsumoto 2009c, Restrepo et al. 2010) examined a pocket connection that was detailed to have a high level of ductility (Figure 11 and Appendix C). A corrugated steel duct was used to form the pocket, and stirrups were provided in the joint region outside the steel duct. Additional steel hoops were provided around the top and bottom of the duct. All of the column bars extended directly into the pocket.

Cyclic testing demonstrated connection performance that emulated that of CIP concrete, with damage concentrated in the column plastic hinge zone. Although the researchers concluded emulative performance, some differences in behavior between the precast and CIP specimens were observed. Little joint damage occurred in both specimens, but rebar strain distributions and joint crack patterns differed. More analysis and testing are recommended to better understand the behavior of the joint region.

Bar slip was only slightly higher in the CPFD specimen compared to the CIP specimen; thus, the bars were well anchored in the joint.

Connection failure occurred due to column bar buckling followed by bar fracture. The connection achieved a drift of 4.2% at failure compared to 5.9% for the reference CIP specimen. The reduced ductility was attributed to a fabrication error that placed the first column spiral two inches lower than intended. This increased the unbraced length of the vertical reinforcement and led to bar buckling earlier than in the CIP specimen. The maximum load resisted by the connection was not affected.

Figure 11 Column to cap beam pocket connection (Matsumoto 2009c)

Matsumoto Cap Pocket Limited Ductility (CPLD) 2009. As part of the same research program, a limited ductility pocket connection was tested (Appendix C, Matsumoto 2009d, Restrepo et al. 2010). The researchers intended to create a connection with simpler joint reinforcement that would be suitable for use in low to moderate seismic regions because of its lower ductility capacity. A corrugated steel duct was used to form the pocket, but no stirrups or hoops were provided in the joint region outside of the steel duct.

Surprisingly, the CPLD specimen achieved a drift ratio of 5.1% with little strength degradation. Connection failure occurred due to column bar buckling followed by bar fracture. The drift ratio was higher than the CPFD specimen. The difference was attributed to the CPFD construction error mentioned above.

Compared to the CPFD specimen, joint damage was greater, with larger crack widths and minor joint concrete spalling. The component of system displacement due to joint shear deformation was an order of magnitude larger. Bar slip was also greater, although bar anchorage was still sufficient.

Matsumoto et al. 2001, 2008. In this study, the authors conducted extensive tests of the monotonic anchorage strength of bars grouted into pockets in a beam. Single bars and group effects were both studied.

Post-Earthquake Inspectability

The post-earthquake inspectability of the connection is similar to that of CIP connections.

Post-Earthquake Reparability

The reparability of pocket connections is similar to that of CIP connections. Pockets provide no special repair access to damaged reinforcing steel. The surrounding concrete, and possibly the corrugated tube, must be removed to access reinforcing bars.

Durability

The durability of pocket connections is similar to CIP concrete, provided that the top of the pocket in a cap beam is protected by a diaphragm pour. Otherwise, the cold joint around the perimeter of the pocket could be a location for the ingress of water and corrosive agents. Depending on how the interface in the precast system is grouted, local voids are possible, in which case the durability of the precast system may be somewhat inferior to that of the CIP system.

Performance and Time Savings Evaluation

Performance grades were assigned based on the comments stated above regarding construction risk, seismic performance, inspectability, and durability.

Table 7 Performance Potential Evaluation for Pocket Connections

Performance Potential	Definition Relative to CIP	Construction Risk Value	Seismic Performance Value	Durability Value	Inspectability Value
+2	Much better				
+1	Slightly better				
0	Equal		1 2 5		1 2 3 4 5
-1	Slightly worse	1 2 3 4 5		1 2 3 4 5	
-2	Much worse		3 4		

The use of precast columns and cap beams connected with pockets is estimated to save 5.5 days, relative to CIP bridge bent construction (see Table 23 in the Time Savings section). This is an approximately 25% reduction in construction time. The majority of the savings was due to precasting the cap beam. Little, if any, time is saved by using a pocket at the column to footing connection.

Out of all of the precast connection types, the time savings associated with the pocket connection was the smallest (Table 8). Due to the large volume of material required to fill the pocket, concrete would typically be used instead of grout. This choice reduces speed of the pocket connection because concrete typically requires more time to gain strength than grout.

Table 8 Time Savings Potential for Pocket Connections

Time Savings Potential	Definition Relative to CIP	Value
+2	Much better	
+1	Slightly better	1 2 3 4 5
0	Equal	
-1	Slightly worse	
-2	Much worse	

Technology Readiness

Use in Practice. At the Port of Khalifa in Abu Dhabi, three recently constructed bridges, each over 1 km long, used a version of the pocket connection (Karapiperis et al. 2010, Appendix C). A rebar cage protruding from the bottom of each end of the cap beam is embedded in a void at the top of a pier (Figure 12). The connection is completed by pumping self-consolidating concrete through a tube from the top of the cap beam down into the pocket. No details were given that describe the measures taken to ensure complete filling of the voids. The seismic risk at the site is moderate (LRFD Seismic Zone 2). The seismic performance of the connection is not discussed in the article. However, the constructability of the connection is supported by the fact that it was used on a highly repetitive and rapidly constructed bridge structure built over water.

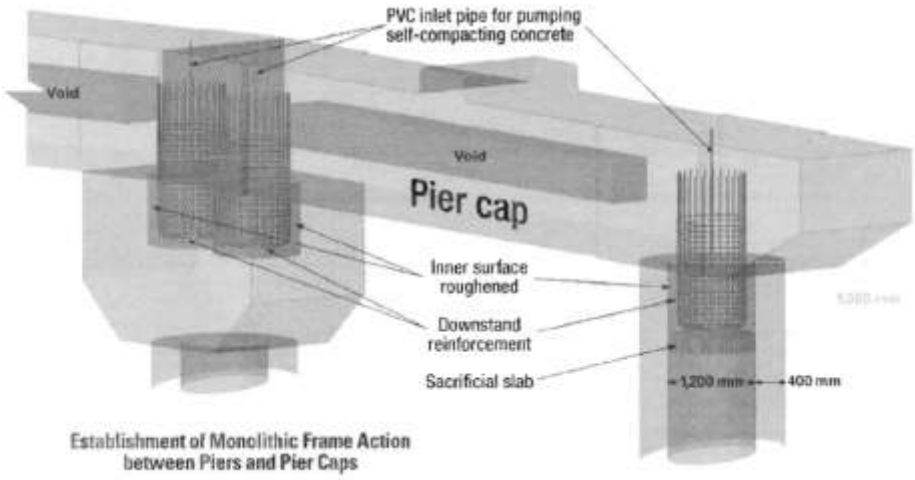

Figure 12 Pocket connection in Abu Dhabi (Karapiperis et al. 2010)

A bridge substructure in Boone County, Iowa, was constructed with concrete filled steel piles and a precast pile cap (see Figure 13 and Wipf et al. 2009). Reinforcement embedded in the piles was concreted into pockets in the pile cap. While not built in a high seismic region, this bridge provides another example of the constructability of pocket connections.

Figure 13 Pocket connection of pile cap to piles in Iowa (Wipf et al. 2009)

Design Guidance. Design guidance can be found in Matsumoto et al. 2001; Matsumoto et al. 2008; and Restrepo et al. 2010.

Technology Readiness Level Evaluation. Based on the level of seismic research, available design guidance, and use in practice, the evaluated pocket connections achieved TRL scores as shown in Table 9. The absence of testing of seismic components (Level 5) is not regarded as negative because there are essentially no components to test. Individual TRL values are given in Appendix C for different versions of the connection.

Table 9 Technology Readiness Level Evaluation for Pocket Connections

Technology Readiness Level (TRL)		**% of Development Complete**			
TRL	**Description**	**0-25**	**25-50**	**50-75**	**75-100**
1	Concept exists				
2	Static strength predictable				
3	Non-seismic deployment				
4	Analyzed for seismic loading				
5	Seismic testing of components				
6	Seismic testing of subassemblies				
7	Design and construction guidelines				
8	Deployment in seismic area				
9	Adequate performance in earthquake				

Summary

Given their good performance potential, pocket connections are promising for use in high seismic regions, provided that sufficient joint reinforcement is provided. However, the additional curing time of concrete relative to grouted connections makes the pocket less attractive for accelerated construction. This shortcoming could be mitigated by using grout or concrete with high early strength. To avoid the material's shrinking away from the corrugated steel tube, grout with non-shrink properties would be the better choice.

Additional experimental and analytical efforts are necessary to develop design equations for pocket connections. Other areas that need to be further explored are the joint behavior and joint performance limit states.

Member Socket Connections

Description

Member socket connections are constructed by embedding one precast structural member inside another. The connection is secured by either casting the second member around the first or using a grout or concrete closure pour in a preformed socket, as shown in Figure 14. The major types discussed below are connections involving precast concrete columns and concrete filled steel tubes (CFST). Additional discussion is provided on concrete filled fiber-reinforced plastic tubes (CFFT) and on topics for which information was available. Socket connections have been used occasionally in the building industry (*fib* Bulletin 27), but few examples of their use in bridges were found. Connection examples are provided in Appendix D.

This connection type can be used in the following locations.

- Footing to column
- Column to cap beam
- Pile to pile cap

Footing to Column. The most constructible location for the socket connection is between the footing and column (see Figure 14). The reinforcement for the footing is constructed and the column is set in an opening in the reinforcing cage. The footing concrete is cast around the column to create the connection between the column and footing. This procedure is quick, simple, and differs little from the standard practice of casting footings in place. Alternatively, the footing can be cast with a hole in the center before the column is set in place. The column is placed in the hole, which is then grouted to bond the footing and column.

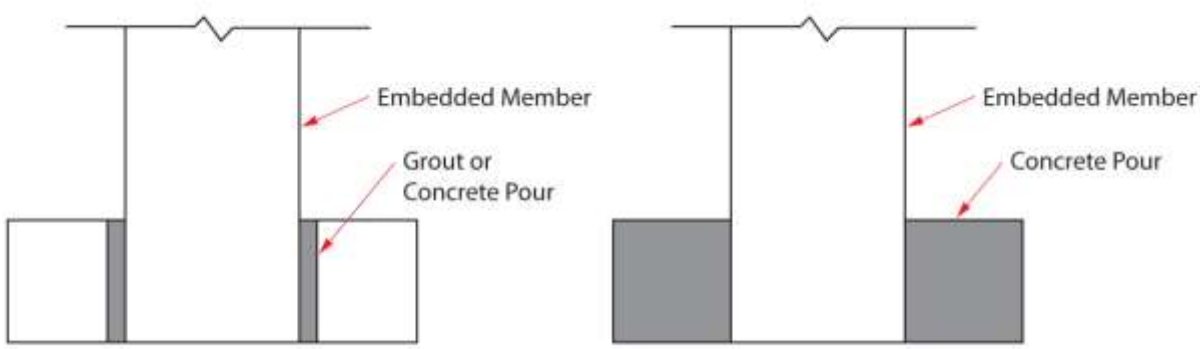

Figure 14 Member socket connection concepts

Column to Cap Beam. Because cap beams that are cast-in-place cannot be rapidly constructed, precast cap beams are considered for the discussion of the column to cap beam

socket connection. The precast cap beam must be formed with an oversized hole in which to embed and grout the column. These spatial demands will likely require the cap beam to be wider than it would normally need to be to provide enough continuous beam cross section on either side of the socket. Also, grout dams will have to be built around the base of the socket to allow the grouting of the socket. The grouting should be performed from below with grout vent ports at the top to ensure the entire socket has been filled. If the socket is open at the top, it may also serve as a vent. Depending on the size of the cap beam, depth of the socket, and detailing of the cap beam concrete above the socket, the cap beam might have to be shored until the grouting is complete.

Pile to Pile Cap. Piles are typically embedded in pile caps, but often only for a short distance (approximately 3 to 6 inches) and the main connection between the two members is provided with reinforcing steel. A socket connection would differ from the standard pile to pile cap connection by embedding the pile deeper into the pile cap, thereby removing the need to provide reinforcing steel between the two elements.

Precast prestressed concrete piles often have to be cut off to the correct elevation after driving, and that generally requires them to be drilled to accommodate dowels at the top for connection to the pile cap. Use of a socket connection would eliminate the need for such drilling by making use of bond between the pile and pile cap.

Precast pile caps are advantageous in marine construction because they avoid the need to erect formwork over water. However, in construction over land a CIP pile cap is more likely to be used because it avoids the need for heavy lifting. There, the reinforcing steel is built around the in-situ piles and then the pile cap concrete is cast.

Material Requirements

See the general section for common material requirements, including grout and reinforcing steel. Materials requirements specific to socket systems are discussed below.

Grout. If a socket is precast into another member, the interface between the embedded member and the socket must be filled with grout or flowable concrete.

Steel Tube. A socket form is required if the footing is to be constructed before the column arrives on site or for column insertion into precast cap beams. A corrugated steel tube provides the formwork, confinement reinforcement for the joint region and surface roughness for shear transfer of shear forces to the surrounding concrete. The tube must have sufficient strength to provide the required confinement.

Construction Risk

Member socket connections offer low construction risk in most circumstances, and are assigned a risk value of +1, implying a slightly lower risk than CIP construction. There are few constraints on the tolerances and there is no steel projecting from the column to interfere with other steel in the footing or cap beam. The performance potential in all categories is shown in Table 10. Specific risk issues are discussed below.

Precast Fabrication. Column fabrication, handling, and transportation are simplified by the lack of protruding elements. The main bars in the precast concrete columns are straight and have internal headed anchors rather than outward facing hooks. CFSTs have only an annular ring welded to the base. For CFSTs, the welds for the tube fabrication and annular ring attachment need to be inspected.

Site Erection. Member socket connections provide good tolerances during site erection. The member can be shifted laterally inside the socket to the correct alignment, and the size of the socket can be chosen to provide adequate adjustability. If a preformed socket is used, the grouted joint around the embedded member needs to be inspected. A cap beam with a socket connection may need to be temporarily supported by a friction collar on the column, column shoring bracket, or other means during the socket grouting. Lifting induced stresses must be considered more carefully for an element with large preformed voids.

Seismic Performance

Member socket connections are designed to develop the full section cyclic capacity of the embedded member. Therefore, seismic performance depends on ductile behavior of the embedded member, elastic behavior of the surrounding member and good transfer of moment and axial force in the joint region. The joint transfer requirements distinguish the socket connection from a comparable CIP system. Member socket connections receive a seismic performance value of 0, implying a similar performance to CIP construction.

There are two main connection types: one for precast concrete and one for steel. Both types have been tested for column to footing connections. Neither connection has been tested for use in column to cap beam connections, but similar performance would be expected. A third, less developed connection detail embeds a CFFT in a surrounding concrete member. At this stage in its development, the detail also requires steel reinforcing to connect to the footing. Therefore, the primary function of the fiberglass-reinforced polyester (FRP) tube is for concrete confinement. The experimental testing of all three connection designs is reported below.

Precast Concrete Column. Experimental testing at the University of Washington has shown emulative performance of the connection (Figure 15 and Appendix D). The footing remained uncracked and all inelastic deformation occurred in the column plastic hinge region. The drift levels were comparable to CIP construction. The vertical reinforcement in this column used heads to anchor the bars at the base of the column, which provided a more direct load path than the conventional bent-out hooked bars. The embedded portion of the column had a roughened surface to increase the bond between the column and footing (Haraldsson et al. 2010 Draft). Stirrups normally required in a footing by the Caltrans procedure were installed but proved unnecessary because the stress in them never exceeded 3 ksi.

The footing exhibited no signs of punching failure, even after the column was loaded to 3.5 times the design axial load. Future tests with a thinner footing are planned to determine the limiting depth for a punching shear failure under combined moment and axial load.

Riva (2006) tested the cyclic performance of a column to foundation connection using one member socket specimen (see Appendix D). It was tested for comparison with three grouted

duct specimens and one CIP control specimen. The member socket connection exhibited distributed cracking up the column for a length approximately equal to the column depth. The cracking was more distributed than both the CIP and grouted duct specimens. The CIP specimen had a large crack and some spalling at the base of the column, but only minor cracks up the length of the column. The grouted duct specimens had significant damage to the base grout layer, but no damage up the length of the column. Due to its more distributed damage zone, the member socket connection had less base rotation than the CIP or grouted duct connections. The member socket connection exhibited good drift capacity; at 5% drift, the strength was 82% of the maximum. The specimen failed at 5.5% drift due to bar buckling. See the Grouted Duct section for additional discussion.

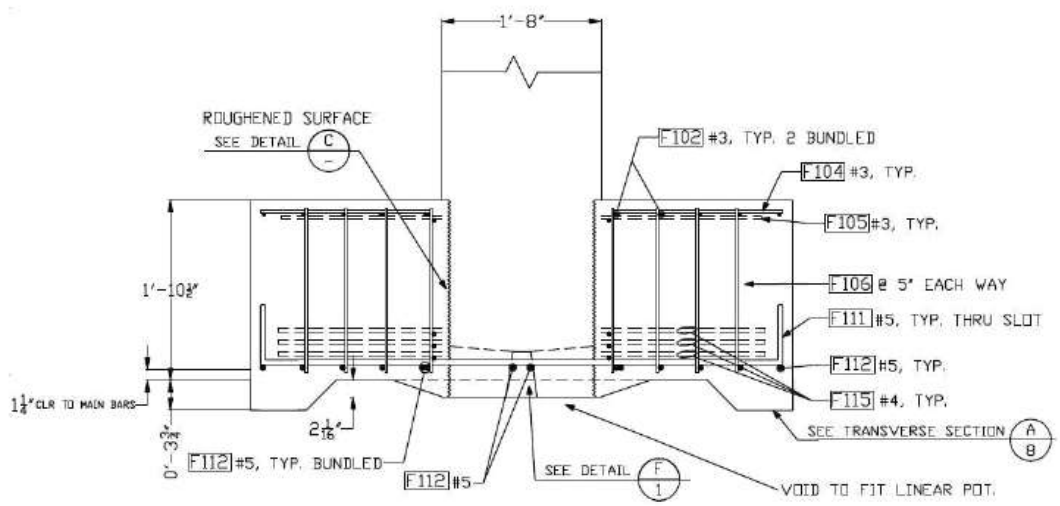

Figure 15 Precast concrete column socket connection (Haraldsson et al. 2010 Draft)

Concrete Filled Steel Tubes. Experimental testing of CFST column to footing connections at the University of Washington has shown ductile performance with no footing damage (Figure 16 and Appendix sheet D). The plastic capacity of the composite column is developed with the appropriate tube embedment depth and an annular ring welded at the base of the tube. The annular ring increases the area of concrete that is engaged to anchor the tube and prevents column pull-out. As the column deflects to drifts of 3 or 4%, local buckling develops in the tube wall (Figure 17). The cycling between large tensile and compressive strains in this location eventually leads to column failure by ductile tearing of the tube wall between 6% and 8% drift. Strength decreases were insignificant until approximately 6% drift (Roeder and Lehman).

- Comparisons of CFST seismic performance to reinforced concrete columns with the same diameter revealed larger inelastic deformation capacity, reduced damage at a given drift, and less deterioration in resistance. The steel tube confines the concrete to delay spalling, while the concrete braces the steel to delay tube wall buckling.

- Because the space between the column and the corrugated steel tube contains no reinforcement, the shear force transfer in that region depends on the shear strength of the concrete.
- Continuing research is exploring the limit on the *D/t* ratio to allow for more slender tubes. The majority of the tested specimens had a *D/t* ratio of 80, which is larger than what is permitted by AASHTO and the American Institute of Steel Construction (AISC). The relationship between *D/t*, F_y, and the embedment depth ratio l_e/D are being studied. (Roeder and Lehman 2008).

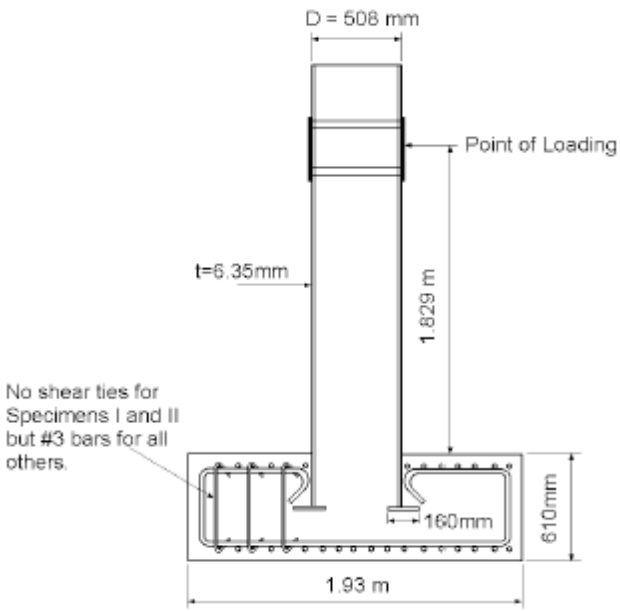

Figure 16 Concrete filled steel tube (Roeder and Lehman 2008)

Figure 17 Local buckling of CFST (Kingsley 2005)

Marson and Bruneau (2004) tested the connection of a CFST welded to an assemblage of steel plates and channels and embedded in a concrete footing (Figure 18). The column was subjected to axial and cyclic loading and the specimens had *D/t* ratios between 34 and 64. The CFST exhibited ductile behavior, reaching 7% drift before fracture. The researchers suggested that the foundation connection detail could be optimized, as stresses were very low in the steel plates and channels.

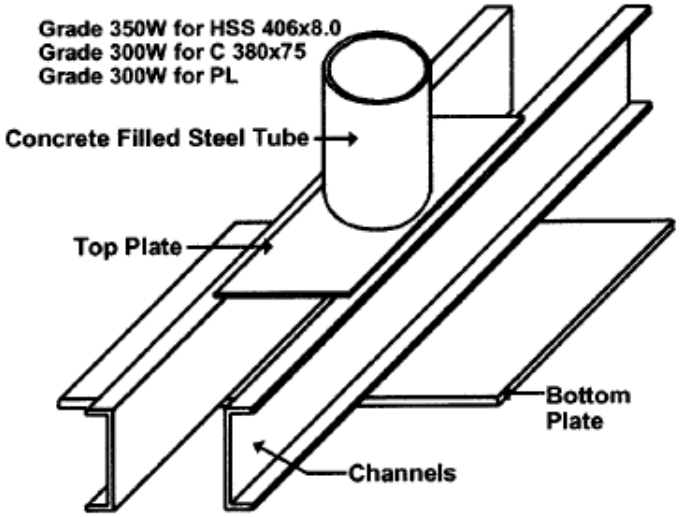

Figure 18 CFST connection to steel assembly embedded in footing (Marson and Bruneau 2004)

Concrete Filled FRP Tube. Nelson et al. (2008) at Queen's University, Ontario, tested the push-through and moment capacity of CFFT column to footing connections made through direct embedment of the tube without the use of steel reinforcement. From the monotonic push-through tests, the researchers obtained bond stress versus slip plots and estimated an average ultimate bond strength of 110 psi between the glass fiber reinforced plastic (GFRP) tube and the concrete. During the monotonic cantilever bending tests, CFFT specimens with sufficient embedment (>0.73D) exhibited good pseudo-ductility and could develop the full flexural strength of the section. The pseudo-ductility is provided by the gradual slip of the FRP relative to the footing, allowing the lateral resistance to remain constant through a large bending deflection. The values for ultimate bond strength and required embedment depth may vary depending on the FRP tube characteristics, *D/t* ratio, concrete modulus of rupture, and amount of confining steel reinforcement in the footing. Additional research is necessary to determine the cyclic performance of embedded FRP connections.

Zhu et al. (2006) at Florida International University, Miami, tested the seismic performance of three CFFT connections using steel reinforcement dowels with and without FRP tube embedment in the footing, or post-tensioning (see Appendix D). The post-tensioned specimen was tested and is discussed in the hybrid connection section. This connection is not solely a member socket, as significant resistance is provided by the direct connection of reinforcing steel to the footing and column. The researchers reported improved strength, ductility, and energy dissipation relative to conventional reinforced concrete columns with the same diameter and mild steel reinforcement ratio. Performance gains were attributed to the concrete confinement provided by the FRP tube and composite action of the tube and concrete. The FRP tube consisted of a filament winding with glass fibers and epoxy resin.

Miscellaneous. Provided the member socket connection can develop the tension capacity of a given pile, it could be used for pile to pile cap connections. For a precast concrete pile or CFFT pile, the capacity would be provided by bond between the pile surface and the concrete. Tests by Haraldsson et al. and Nelson et al. discussed above provide some information about the bond capacity of precast concrete and CFFT member socket connections. For a CFST pile, the anchorage of the annular ring and bond of the steel and concrete would provide the required capacity.

Post-Earthquake Inspectability

The post-earthquake inspectability of the connection type is approximately equal to CIP concrete. Therefore, it is assigned an inspectability rating of 0. Specific inspectability comments related to materials are stated below.

- *Precast Concrete* – The damage inspectability is similar to that of CIP connections.
- *CFST* – Damage to the steel tube is readily observed. Damage to the confined concrete inside the tube is not.
- *CFFT* – Damage to the FRP tube is readily observed. Damage to the confined concrete inside the tube is not.

Post-Earthquake Reparability

All three member socket connection types are as reparable as their respective steel column and CIP concrete column counterparts. The ability to repair the FRP tube needs to be determined and considered.

Durability

The overall durability of the connection type is equal to or slightly better than CIP concrete. A durability value of 0 is assigned.

- *Precast Concrete* – The durability is similar to or better than CIP concrete. There is no steel crossing the cold joint, which is an improvement over CIP.
- *CFST* – The durability is similar to a typical steel substructure. The steel tube is recommended to be hot-dip galvanized to provide corrosion protection. Soil should not be in contact with the column where it attaches to the footing to reduce corrosion potential. A non-structural barrier can be constructed to protect this region.
- *CFFT* – The durability is similar to or better than CIP concrete. The FRP tube protects the concrete from corrosive agents. The susceptibility of the FRP tube to damage from impact loads needs to be determined and considered.

Performance and Time Savings Evaluation

Performance grades were assigned based on the comments as listed in Appendix D regarding construction risk, seismic performance, inspectability, and durability and are given in Table 10. Note that the range of evaluations is particularly wide for this connection owing to complexity of the connection detailing and whether the connection design considered seismic loading.

Table 10 Performance Potential Evaluation for Socket Connections

Performance Potential	**Definition Relative to CIP**	**Construction Risk Value**	**Seismic Performance Value**	**Durability Value**	**Inspectability Value**
+2	Much better	2	4		
+1	Slightly better	1		1 2 4	4
0	Equal	4	1 2 3	3 5 6	1 2 3 5 6
-1	Slightly worse	3 5 6			
-2	Much worse		5 6		

Table 11 provides the time saving potential for socket connections. The use of precast columns and cap beams connected with sockets is estimated to save 10.5 days, relative to CIP bridge bent construction (see Table 23 in the Time Savings section). This is an approximately 50% reduction in construction time. The majority of the savings was due to precasting the cap beam. For a column with a footing cast around it, time savings is limited by the required strength of the concrete before construction may proceed.

Table 11 Time Savings Potential for Socket Connections

Time Savings Potential	Definition Relative to CIP	Value
+2	Much better	1 2 4 5 6
+1	Slightly better	3
0	Equal	
-1	Slightly worse	
-2	Much worse	

Technology Readiness

Use in Practice. A version of the University of Washington column to footing connection was built in 2010 with threaded-in bars across the precast-to-CIP interface (Figure 19).

Figure 19 Erecting a socket connection prior to casting the footing

After the 1995 Kobe earthquake, CFSTs were used in Japan to rapidly rebuild infrastructure, particularly railway bridges and overpasses. After only 1 year of reconstruction efforts, the railway system was functioning again. CFSTs were also used for some railway columns before the earthquake. These structures survived the event without collapse, but did exhibit wall local buckling, also called “elephant’s foot buckling.” It should be noted that these CFST applications used connections other than the socket connection. (Roeder 2010)

CFSTs have also been used for tall buildings, especially for the purpose of providing stiffness in the columns. The steel columns are erected for several floors and then high-modulus

concrete is cast inside them. For example, the technique was used in the 2 Union Square building in Seattle and achieved high stiffness more economically than with structural steel alone.

CFFT were used for precast composite FRP and concrete driven piles on the Route 40 Bridge in Virginia (Fam 2003). The CFFT piles were proposed as a more durable pile for use in corrosive environments. It should be noted that the piles were connected to the CIP pile cap with steel dowels and minimal pile embedment, not a member socket connection. However, it would be feasible to create a member socket connection by embedding the FRP tube deeper and removing the steel dowels.

Design Guidance. For precast concrete columns in buildings, limited guidance is provided by (fib Bulletin 27 (2003) and Osanai et al. (1996). Guidelines that are less stringent and more realistic for bridges are currently under development at the University of Washington.

The *AASHTO Guide Specifications for LRFD Seismic Bridge Design* (2009) provides guidance for CFST column design. However, no specific guidance is provided for connection design.

AASHTO LRFD Bridge Design Specifications (2007), Section 6.9.5.2, limits the *D/t* ratio for CFST columns to prevent tube wall buckling. Current testing has used *D/t* ratios that are much higher than AASHTO limits (and closer to AISC limits), while still obtaining good cyclic ductility.

Technology Readiness Level Evaluation. Based on the level of seismic research, available design guidance, and use in practice, the evaluated socket connections achieved TRL scores as shown in Table 12. Individual TRL values are given in Appendix D for different versions of the connection.

Table 12 Technology Readiness Level Evaluation for Socket Connections

Technology Readiness Level (TRL)		**% of Development Complete**			
TRL	**Description**	**0-25**	**25-50**	**50-75**	**75-100**
1	Concept exists				
2	Static strength predictable				
3	Non-seismic deployment				
4	Analyzed for seismic loading				
5	Seismic testing of components				
6	Seismic testing of subassemblies				
7	Design and construction guidelines				
8	Deployment in seismic area				
9	Adequate performance in earthquake				

Summary

Given their good performance potential and time savings, member socket connections are promising for use in ABC in high seismic regions.

For precast concrete column member sockets, the connection needs to be tested for use with precast cap beams. A cap beam is much narrower than a footing, and the effect of the reduced strength and stiffness on the connection has not been determined. The effect of different member surface roughnesses on required embedment, bond, and connection performance should be explored. Also, models and design equations for transfer of forces in the joint region are needed, including the required embedment of column and required footing depth.

Additional experimental and analytical efforts are necessary to develop design equations for CFST columns and foundation connections. Areas that need to be addressed are tube *D/t* ratio, steel strength, and models for the transfer of forces in the joint.

The monotonic loading tests of embedded CFFT connections are a good start to understanding the connection behavior. Additional research is necessary to determine the cyclic performance of embedded FRP connections. Relative to CFSTs, they are not considered a good candidate for seismic zones because the cost is higher than steel and FRP tubes are more susceptible to impact damage, more difficult to repair, and non-ductile. CFFTs are most beneficial for corrosive environments, where steel tubes could suffer from corrosion.

Hybrid Connections

Description

Hybrid systems and connections contain an unbonded prestressing tendon and mild steel reinforcement or other energy dissipating material in the plastic hinge region. The term “hybrid” denotes the use of two reinforcing materials, prestressing, and mild steel, where each provides a benefit for seismic performance, as described below. The joints open when the seismic moment becomes large enough, and essentially all of the member displacement is accommodated by the concentrated rotation at the joint. The body of the member undergoes no plastic deformation and damage to it is thus minimized. Furthermore, because the tendon is unbonded, joint opening causes only a small increase in strain in the tendon, which therefore remains elastic. Consequently, the tendon provides an elastic restoring force to the system that minimizes residual drift after a seismic event. The resulting hysteresis loop is “flag-shaped,” as shown in Figure 20. Ideally, the hysteresis loop passes through the origin at each cycle because there is no displacement when the load is removed.

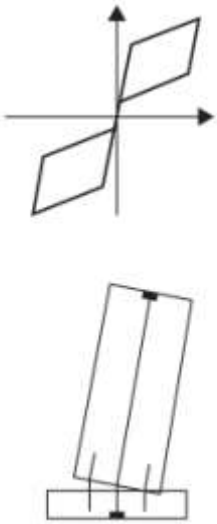

Figure 20 Hybrid connection – diagram and generalized hysteresis (Restrepo et al. 2010)

The concept was first developed for building frames, where the beams are prestressed with unbonded tendons that run the length of the frame. During an earthquake, the beams rock against the columns in rigid body motion rather than deforming. Consequently, they suffer less damage, particularly in shear, than is the case for CIP construction. Figure 21 shows a hybrid beam in the Precast Seismic Structural Systems (PRESSS) building (Nakaki et al. 1999) with essentially no damage after being loaded to 4% drift. Figure 22 shows a building under construction (Englekirk 2002). The large central duct for the post-tensioning tendon and the smaller upper and lower ducts for the grouted reinforcing bars can be seen.

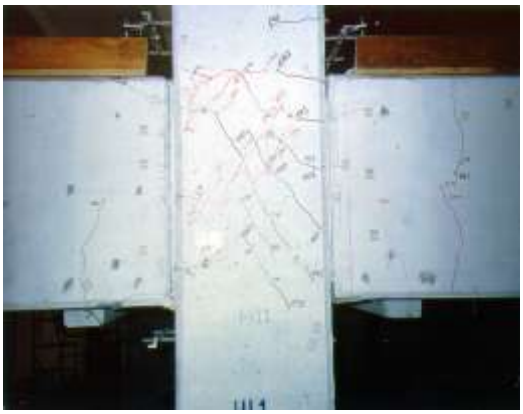

Figure 21 Hybrid beam-column joint - 4% drift

Figure 22 Hybrid moment frame under construction

Most designs for hybrid systems use precast components, although that is not necessary to achieve the goal of minimizing residual drift. It is unlikely that a purely CIP hybrid system could be constructed fast enough to be of interest for the present purpose.

No hybrid bridge systems have yet been built. Examples of proposed systems and laboratory tests are given in Appendix E. In most cases the column is post-tensioned.

This connection type can be used in the following locations.

- Footing to column
- Splices for column segments or cap beam segments
- Column to cap beam

Because the moment diagram in a column or cap beam under seismic load is linear, with maximum moments at the ends, any interior joints in the member experience moments that are lower than those at the ends. These joints are unlikely to open if the same post-tensioning force exists along the member length. Therefore, a hybrid connection in the interior of the member is likely to behave elastically and to be designed as capacity-protected.

Material Requirements

Post-tensioning Strands and Bars. In a hybrid system, elastic strain capacity of the tendon is important in ensuring re-centering. Strand has a higher yield strain than bar, and so in general may be preferable. The span/depth ratio of the member also influences the choice; for a given design drift ratio, higher strain capacity is needed for stocky members.

Epoxy-coated strand is available and may offer advantages for corrosion protection. However, the coating often contains grit to improve bond, which also increases friction during stressing. Those properties should be considered when selecting the tendon.

The tendon must be anchored in such a way that it can withstand cyclic loading. Recent work by Walsh and Kurama (2010) on strand tendons has shown that conventional wedge

anchors create stress concentrations that reduce the tendon's strain capacity significantly below the value for the strand material.

Specialty Concretes. Special purpose concretes, such as fiber-reinforced concrete, engineered cementitious composites, and high-performance concrete, are available. They offer a variety of properties that exceed those available in conventional concrete, such as superior strength, compression strain capacity, tension strength, and ductility. These characteristics improve the performance of concrete in plastic hinge regions. While they may be used for any connection system, they are particularly useful for hybrid systems because of the extra axial force caused by the prestressing.

Other Energy-dissipating Materials. Energy dissipation in the hybrid connection can be provided by a variety of materials. While mild steel reinforcing bars are the most common and economical, others, such as SMAs, high-damping rubber or lead-core bearings, or external dissipaters using friction or yielding steel components have all been considered. These materials are discussed in the Emerging Technologies section. External dissipaters are likely to be easier to replace after an earthquake, but slower to install during initial construction.

Stainless steel has high ductility and toughness and may be useful for the energy-dissipating material. It was used in building frame tests at NIST (Stone et al. 1995) and in the structural wall in the PRESSS building (Nakaki et al. 1999). Stainless steel bars were also used as energy dissipating connectors in the NCHRP 12-74 hybrid specimen tests. They were chosen over mild steel because of long-term durability concerns. Galvanized steel or epoxy-coated bars are expected to lose their protective coating after reaching yield strains, possibly exposing them to corrosion after a seismic event. Additionally, the joint opening and localized concrete damage at the joint of hybrid connections is expected to expose the connection bars to corrosive agents. Limited testing by Restrepo et al. (2010) compared the uniaxial and cyclic stress-strain behavior of 316LN stainless steel to A706 mild steel. The stainless steel specimens achieved slightly higher strength and an ultimate strain of 30%, compared to 10% for A706 steel. The cyclic behavior of the two materials was comparable for strains between 1 and 3%.

Construction Risk

Hybrid connections carry higher construction risk than non-prestressed construction in most circumstances, and are assigned a risk value of -1. This assessment is largely due to the need for post-tensioning, which causes the need for an extra task in the schedule and an additional specialist subcontractor. Note that research on a pretensioned system now being developed and tested at the University of Washington (Stanton et al. 2010) could mitigate this problem. The performance potential in all categories is shown in Table 13.

Precast Fabrication. Post-tensioning ducts must be cast into the precast concrete elements in addition to any reinforcing steel that crosses the interface.

Site Erection. The problems associated with site erection vary significantly with different implementations of the basic principle. For example, hollow columns provide greater access to the tendon during construction, but might present greater challenges with corrosion protection. The use of a bar tendon allows it to be coupled at each segment joint, thereby

avoiding the need to thread segments over a long length of tendon, but the strain capacity at yield is much lower for bars than for strand.

If the tendon is post-tensioned on site, that operation is likely to be conducted from the top of the column or cap beam.

Anchoring the tendon at the footing presents one of the greater challenges, because of the very limited access beneath the footing. Possible approaches include the following.

- Cast a duct in the footing that is bent into a U-shape and feed a strand tendon through the column and duct after installation of the column. Grout the duct in the footing to provide bond. Leave the region in the column unbonded (Figure 23). This approach allows the tendon to be installed in one operation after the column is placed. Its feasibility depends on, among other criteria, the width of the column and the permissible bend radius of the strand.
- Cast a straight strand tendon into the footing and thread the column segments over it. This would require accurate placement of the tendon in the footing.
- Cast an anchorage into the footing and couple a straight tendon (bars or strands) at the top of the footing. If the column can be lifted in one piece, the tendon could be charged into the column ducts prior to lifting and coupled before final lowering and placement.
- Leave vertical ducts in the footing, install the tendon after placing the column, and anchor it beneath the footing. Limited access below the footing would generally make this approach difficult. Corrosion protection would also require stringent prevention measures.

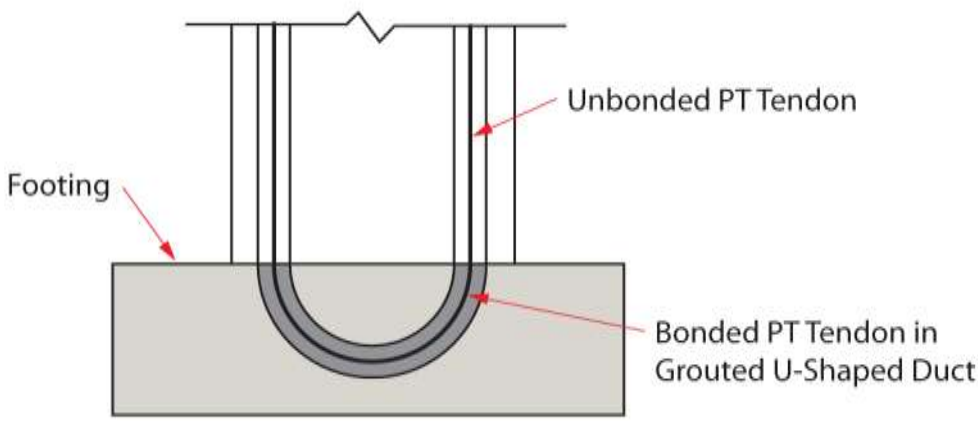

Figure 23 Post-tensioned tendon in grouted U-shaped duct

Anchorage at the top of the column or cap beam is open to a wider variety of options. However, in a post-tensioned system, corrosion protection is likely to require careful planning because the anchorage is likely to be embedded beneath the slab. Cracking, with the attendant possibility of moisture ingress, is likely at the anchorage location because the pier represents a support where the deck will experience tension due to the negative live load moments.

For spliced segmental columns, the tendon force provides the primary moment resistance. If additional capacity is required, it can be achieved using bars in grouted sleeves or ducts. Once the post-tensioning is installed, grouting of these components is not on the critical path.

A pretensioned system now being developed and tested at the University of Washington (Stanton et al. 2010) has the potential for alleviating both the erection problems and the corrosion-protection problems associated with post-tensioning.

Seismic Performance

In hybrid systems and connections, the unbonded tendon is designed to remain elastic and provide a restoring force to the system to minimize residual displacements. This is combined with energy dissipating elements, which provide hysteretic damping to reduce the peak structural response and help to control concrete crack widths. The tendon must be unbonded to distribute the rotation-induced deformations over the entire length of strand. This reduces the change in strain in the post-tensioning steel for a given drift and allows it to remain elastic until a high drift level. Hybrid connections receive a seismic performance value of +2 because combination of energy dissipation with low residual displacements constitutes a significant improvement over CIP construction.

Post-tensioned Solid Precast Concrete Columns. Hybrid systems were investigated analytically by Kwan et al. (2003a and 2003b). The research noted that hybrid columns provide less hysteretic damping than a comparable column with fully bonded reinforcing. Thus, the hybrid system is expected to have a larger maximum displacement in a seismic event. The amount of unbonded and mild reinforcement can be proportioned to balance performance goals for maximum and residual displacement. The higher compressive stresses in the concrete due to the post-tensioning force can lead to premature crushing of the concrete at lower drift levels than in columns with bonded reinforcing. High performance concrete could be used in regions of high stress/strain demands to mitigate this issue.

The NCHRP 12-74 research project tested three hybrid column specimens: one conventional solid concrete, one concrete-filled steel pipe, and one dual shell assembly with outer and inner steel pipes (Restrepo et al. 2010, Tobolski and Restrepo 2010). The dual shell column is technically not “solid,” but it is included here because the inner shell prevents inward spalling, so the column behavior is similar to that of a solid one. All of the specimens used stainless steel bars for the energy dissipation reinforcement. The hybrid specimens showed reduced damage and residual displacement when compared with CIP and emulative specimens. An ultimate deformation capacity of 6% drift ratio was achieved. However, in two of the specimens, damage to the grout bedding layer after 2% drift ratio led to continuous strength reduction until column bar fracture. The researchers recommend the use of fiber-reinforced grout to reduce grout bed damage at the compression toe, thereby improving lateral strength capacity and self-centering performance. Fiber-reinforced grout has been used successfully in the past in building applications (Stone et al. 1995).

Roh and Reinhorn (2010) investigated analytically the use of SMA bars with hybrid systems instead of mild steel as the energy dissipating element. The intent was to further mitigate the problem of residual displacements by exploiting the superelastic properties of SMA, which

can recover large inelastic strains after unloading. Details are given in the Emerging Technologies section.

Tests by Motaref et al. (2010) used a combination of a post-tensioned bar tendon, mild steel, and an elastomeric bearing. The researchers explored this design to provide energy dissipation while reducing damage in the plastic hinge region. Details are given in the Emerging Technologies section.

Post-tensioned Hollow Box Precast Concrete Column. Hollow box precast columns are typically used on large-scale bridges and viaducts with tall columns. The benefit lies in the reduction in weight and quantity of material used compared with a solid column of similar external dimensions. Given the scale of these columns, they are usually constructed segmentally. In high seismic zones, attention must be paid to confinement of the column walls because of the possibility of spalling both inwards and outwards. The problem may be addressed by filling the internal void with concrete in the plastic hinge region, by using through-thickness ties in the walls, or by other means, such as high-ductility concrete.

Ou et al. (2010) performed cyclic tests on large-scale square hollow box segmental columns with varying ratios of post-tensioned and energy-dissipating steel. The tendon was placed in the interior void and the energy dissipating mild steel bars were centered in the walls. The energy dissipating bars were debonded for a certain length in the footing to reduce strain concentrations. A higher ratio of energy dissipating steel to post-tensioning steel increased system energy dissipation but also increased residual drift.

Tiara et al. (2009) proposed a hollow box segmental reinforced concrete column with a steel plate on the interior surface, replaceable steel fuse bars at segment joints, and unbonded post-tensioning strands at the perimeter of the interior void (see Appendix E). The design concentrates damage in the fuse bars so they can be replaced after an earthquake, restoring the system to its original strength.

Other Hybrid Systems. A pretensioned column system is being developed at the University of Washington (Stanton 2010). By eliminating the post-tensioning, potential corrosion problems at the anchors and the additional site activity of post-tensioning are both removed. The column is pretensioned and the footing and cap beam connections are made using the socket connection. The pretensioned tendons are bonded at the ends of the column, but unbonded in the center using plastic sleeves. Epoxy-coated strand is used to improve both the bond and the corrosion resistance. Mild steel reinforcing bars are also placed in the column to provide energy dissipation.

Zhu et al. (2006) performed a test on a post-tensioned column wrapped in an FRP tube and embedded in the footing. The research is also discussed in the seismic performance discussion of the section on member socket connections. The FRP tube slipped relative to the concrete in the post-tensioned specimen, which resulted in a load drop during that cycle. The specimen had smaller residual deflections and less energy dissipation compared to the control CIP mild steel reinforced concrete specimen. The confinement provided by the FRP tube reduced concrete damage and increased strength relative to the control specimen.

Post-Earthquake Inspectability

The primary difficulty lies in inspecting the tendon. In post-tensioned systems, the anchorages are the places most likely to sustain damage, and the bottom anchorage (if one exists) will be the most difficult to access. A U-shaped tendon, with two top anchorages, offers advantages in this regard. Inspection of the body of the tendon may be easier in a hollow column rather than a solid one, provided that access to the interior void is available.

Pretensioned tendons are less likely to sustain damage because they require no wedge anchors, and with a socket this works well. However, access to the end of the strands is necessary if they are to be checked for possible bond failure and slip.

Post-Earthquake Reparability

Repair of post-tensioning steel in the interior of a hybrid column would be more difficult than a mild steel reinforced CIP column because more concrete has to be removed to access the post-tensioning steel. Additionally, more precautions have to be taken when dealing with tensioned elements. Access to the top anchorage may be possible, depending on how the anchorage and cap beam are detailed.

A damaged post-tensioned bar can be cut and repaired by splicing a new bar onto the remaining undamaged bar. Post-tensioning strands can also be repaired by splicing, but this is more difficult if the strands form a multi-strand tendon because the space needed for the splices may not be available.

There is a higher possibility of repair for a hollow box pier column than a solid one, if the post-tensioning ducts are accessible from the interior.

Durability

The main durability concern beyond those found in CIP reinforced concrete systems is the potential for corrosion of any unbonded post-tensioning. Special protective methods have been proposed, but no examples of implementation were found. Strands are more susceptible to corrosion than bars because of their higher surface-to-volume ratio.

Stainless steel strand is manufactured, but may not be readily available. Epoxy-coated strand is available.

Protection for the tendon could be achieved by placing it inside two concentric ducts. Grout in the inner one would provide corrosion protection, while sliding between the concentric duct walls would prevent bond to the surrounding concrete.

The anchorages may pose the greatest challenge in corrosion protection.

Performance and Time Savings Evaluation

Performance scores were assigned based on the foregoing discussion regarding construction risk, seismic performance, inspectability, and durability (Table 13). The values

should be taken as indicative rather than definitive because of the many possible ways to implement a hybrid system. The construction risk is rated as less favorable than for a CIP system largely because of the additional site activities needed for post-tensioning and grouting. However, those are not necessary in a pretensioned system. The seismic performance is rated as potentially much better because of the reduced residual drift, and the consequently high probability of being able to use the structure directly after an earthquake.

Table 13 Performance Potential of Hybrid Connections

Performance Potential	Definition Relative to CIP	Construction Risk Value	Seismic Performance Value	Durability Value	Inspectability Value
+2	Much better		5		
+1	Slightly better	4	1 2 3 6 7 8	8	
0	Equal	8		4	4 8
-1	Slightly worse	1 3 5 6 7	4	1 2 3 5 6 7	1 2 3 5 6 7
-2	Much worse	2			

The time savings for hybrid connections was rated as 0 (equal to CIP) due to the range of time savings estimated during the evaluations (see Table 14). As with the performance estimates, the expected time savings depend heavily on the details of the implementation. Use of precasting will reduce the time required, but post-tensioning will add to it, most likely resulting in a modest net gain. A pretensioned system, connected to the foundation and cap beam using socket connections, would be expected to offer the same time savings as a non-prestressed socket system, which represents the greatest gain in time of all the systems considered.

Table 14 Time Savings Potential of Hybrid Connections

Time Savings Potential	Definition Relative to CIP	Value
+2	Much better	8
+1	Slightly better	3 4
0	Equal	1 5
-1	Slightly worse	6 7
-2	Much worse	2

Technology Readiness

Most hybrid systems and connections for bridges are in the experimental testing phase of their development, although buildings have been constructed in the United States and elsewhere. Building systems using the hybrid principle, but constructed using structural steel (Christopoulos and Folz 2002) and timber (Buchanan et al. 2008), are also under development.

Analytical and experimental results have shown that the hybrid concept can provide re-centering after a major earthquake, which offers a performance characteristic that cannot be guaranteed with non-prestressed construction. However, the added complexity of the design, the lack of guidance in design codes, and concerns about the long-term durability and corrosion protection of unbonded post-tensioning elements have inhibited bridge practitioners from adopting hybrid systems.

Use in Practice. Hollow box precast segmental columns with bonded post-tensioning were used by the New York State DOT (See Appendix E). They contained no supplementary mild steel.

Hollow box columns have been used for many years in large-scale bridge construction.

Examples of segmental columns are provided by Texas DOT's precast/match cast columns, Colorado River Bridge (Hoover Bypass), and Victory Bridge (New Jersey).

Design Guidance. The NCHRP 12-74 report states that design examples are provided; however, at the time of writing they were not available for review. A forthcoming document by ACI Committee 550, *Hybrid Precast Frames*, will provide additional guidance. This reference will be based on the report by the ACI Innovation Task Group 1, *Special Hybrid Moment Frames Composed of Discretely Jointed Precast and Post-Tensioned Concrete Members* (ACI T1.2). It refers specifically to building frames in which the beams, rather than the columns, are typically the prestressed elements, and it addresses the same hybrid concept.

Technology Readiness Level Evaluation. The TRL evaluation is given in Table 15. Non-seismic field deployment is unlikely to occur because the unbonded tendon system offers no advantage there. The analysis for seismic loading, seismic testing of components and subassemblies, and the design guidelines all take into account the extensive work that has been conducted on the system for buildings, much of which concerns the basic hybrid concept, rather than the implementation in a particular structural type (bridges). This has not been done for the "deployment in seismic area" category because that depends on particular details of construction. However, it should be noted that a number of buildings, including the 39-story Paramount Building in San Francisco, California, (Englekirk 2002), have been constructed using the hybrid system.

Table 15 Technology Readiness Level Evaluation of Hybrid Connections

Technology Readiness Level (TRL)		**% of Development Complete**			
TRL	**Description**	**0-25**	**25-50**	**50-75**	**75-100**
1	Concept exists				
2	Static strength predictable				
3	Non-seismic deployment				
4	Analyzed for seismic loading				
5	Seismic testing of components				
6	Seismic testing of subassemblies				
7	Design and construction guidelines				
8	Deployment in seismic area				
9	Adequate performance in earthquake				

Summary

Hybrid systems have been shown to have seismic performance that is potentially better than that of conventional construction because of their re-centering properties. They have been used in buildings in high seismic zones in California, but have not yet been used for bridges. One hybrid building in Santiago went through the recent earthquake in Chile with no damage

(Stanton personal communication with Patricio Bonelli, the building's designer, October 26, 2010).

Use of the technology in bridges differs from that in buildings because the columns, rather than the beams, are prestressed. This is an advantage because, in building frames, the "beam elongation" associated with rocking of the beams against the columns creates detailing problems in the floor system. In a bridge, the column elongates slightly as it rocks, but it may do so freely without concern about its attachment to adjacent members.

While the seismic performance benefits are not in doubt, connection details for bridges that allow good constructability and durability are still being developed. The primary concerns expressed by bridge engineers include the potential for higher cost to be weighed against the benefits of re-centering; the additional time on site needed for post-tensioning; corrosion of post-tensioning tendons; anchorage details; and ease of inspection and repair.

Further research is needed on connection detailing that will address the concerns of practicing bridge engineers. Engaging practitioners and contractors in such work would lead to benefits. The pretensioned system presently under development appears to hold particular promise because it effectively addresses many of the major practical concerns.

Integral Connections

Description

Integral connections form joints between bridge elements that provide no articulation and transfer moment across the connection interface. The most typical application of integral connections is the integral cap beam/diaphragm to girder connection for a steel/concrete composite bridge. Such connections have historically been constructed with CIP methods, but with ABC, these may use a steel or precast concrete stay-in-place formwork that is filled with reinforced concrete to integrate the bridge components in the joint area.

An example of a CIP integral cap beam that supports concrete girders with a lower stage cap beam is illustrated in Figure 24. The lower stage is constructed first then infilled to create the integral connection after the superstructure is erected. This provides longitudinal positive and negative moment continuity for seismic and other lateral loads. With ABC, the lower stage of the cap beam may be precast and set on the column using any of several connections described in previous sections. The erection of the girders and completion of the integral connection would proceed as with CIP techniques. The girders can be built with stay-in-place forms attached for the upper stage of the cap beam, or forms could be built on site. An example of a precast lower stage cap is shown in Figure 25 for the San Mateo (California) bridge project. This application used upper-stage forms that were built on site.

Figure 24 Two-stage cap beam with prestressed girders

Integrating the columns directly into a combined cap beam/diaphragm, whose soffit is flush with the superstructure, allows for a shallower construction height of the assembly and provides for both positive and negative moment resistance in the longitudinal direction, with potential benefits to seismic performance. The stay-in-place formwork can be part of the load-carrying system and can be equipped with dowels to integrate the structural formwork with the CIP concrete. A structural formwork can be designed robust enough to allow carrying construction loads to enable the erection of the superstructure to continue before the CIP concrete is cured. Typically, the stay-in-place formwork is already fully reinforced before erection. Alternatively, the stay-in-place formwork could be filled with fiber-reinforced concrete as the formwork provides confinement.

Figure 25 Integral precast lower stage cap with precast girders (NCHRP 12-74)

Integral connections must develop the joint shear force transfer mechanism that is required to "turn" the longitudinal girder moments into the column moments. In the confined space between girders and the column, adequate force transfer can be difficult to achieve.

Development of both the positive and negative longitudinal bending capacities of the girders must be provided. Development of negative bending is usually simple because the deck slab provides space for reinforcement. Positive (tension on bottom) bending capacity is more difficult to provide. Strand may be extended from the bottoms of the girders and may be terminated with strand chucks or other positive anchorage devices. Older methods include bending the strand up into the cap beam, but this detail provides questionable anchorage. Alternatively, deformed bars may be extended from the girders and spliced, as shown in Figure 25. However, this requires that sufficient room in the girder lower flange exists for the bars. Often, this is not the case where straight strands have been used.

Longitudinal post-tensioning can be used to improve the transfer of forces, and the post-tensioning force can potentially be used to compress vertical shear interfaces, simplifying the fit-up of the girders to the cap for a flush-soffit arrangement. Restrepo et.al. (2010) have investigated one such configuration for ABC methods as part of the NCHRP 12-74 project.

In the case of a composite steel and concrete bridge, the stay-in-place formwork may be steel and can provide flanges to which the steel girders can be bolted, as in Figure 26. Similarly, a stay-in-place formwork for concrete girders provides cut-outs through which the girders can be inserted and monolithically connected within the CIP concrete. The concrete column is integrated by either inserting the entire concrete column with exposed connection reinforcement into a bottom opening of the steel form or by only extending connection steel through the bottom steel form and providing dowels for shear transfer. This principle is illustrated in Figure 25, although the form there is precast concrete rather than steel. Examples of integral connections can be found in Appendix F.

This connection type can also be used in the following locations.

- Pile to pile cap
- Spread footing or pile cap to column

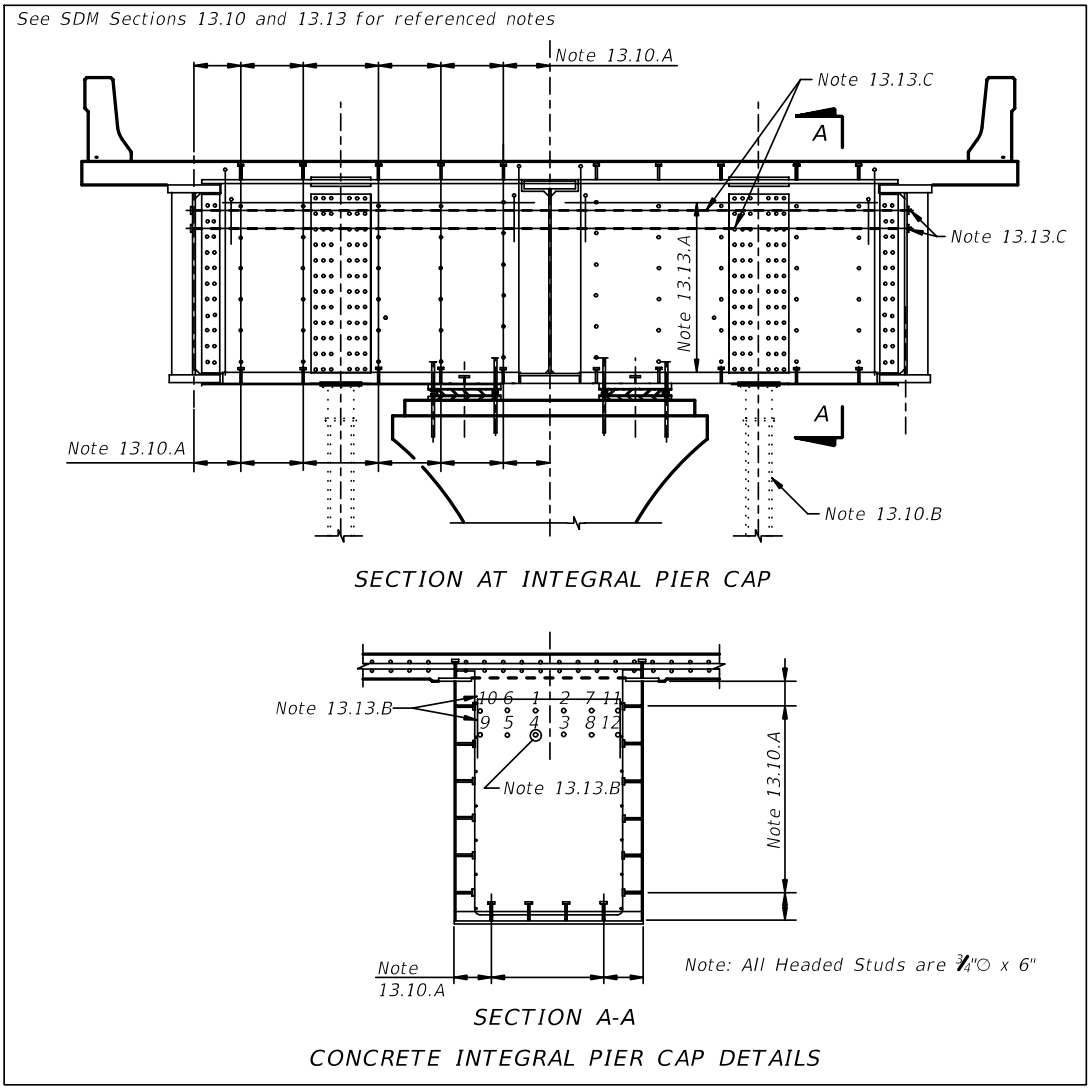

Figure 26 Example for an integral connection, a pier cap on bearings made as a steel/concrete composite (Florida DOT)

Material Requirements

If precast elements are used, then concrete and reinforcing steel similar to that used for other precast elements are required. Depending on schedule requirements, strength gain should be considered, although precast elements will be on hand for some time before use making strength at erection less of an issue. If multiple pieces will be used to form a longer cap and girders will be set before connecting the cap beams with a closure pour, then the effects of such staged construction, including deflections, must be considered.

If the superstructure is steel, then the stay-in-place formwork can be made of steel. However, the formwork could be made of precast concrete or advanced composite materials. As the stay-in-place formwork is exposed to the elements, steel elements will require proper corrosion protection. For a cap beam that is protected by the deck, weathered steel is typically sufficient.

After erection of the necessary elements, the formwork is filled with reinforced concrete. The structural formwork must contain dowels or lugs to allow for composite action between the concrete and the formwork, similar to welded studs in steel forms. A well-designed structural formwork may not require much additional reinforcement. Concrete with fiber reinforcement could be substituted for normal concrete with reinforcement.

The concrete must be a superplasticized or self-consolidating mix that can be pumped into the forms. Adequate consolidation may be difficult to ensure around congested steel or beneath steel plates.

Construction Risk

Grouted duct or socket connections used with integral connections of cap beams to columns are easily constructible in most circumstances as they are very similar to CIP construction and can allow for ample construction tolerances to integrate concrete components. Above the connection with the column in an integral connection, the major variables to consider are

- The complexity of the stay-in-place formwork, in particular dowels for composite construction, can make the connection expensive
- In the case of composite construction, bolted connections can require small tolerances

Precast Elements and Fabrication of Stay-in-place Formwork. A lower stage cap can serve as the lower portion of stay-in-place formwork. Reinforcement for continuity of the upper stage would be part of the precast beam. Stay-in-place forms for the upper stage of concrete construction can be added to girders, but tolerances of girder placement must be considered. This approach also requires a second casting operation in the fabrication plant, with non-standard formwork.

A typical steel stay-in-place formwork is made by a steel fabricator and includes metal cutting, welding, machining, and bolting. The steel fabricator would probably need to be certified for bridge work and the fabrication of stay-in-place formwork would be standard practice.

Ideally, the reinforcement would be installed into the stay-in-place formwork at the fabrication shop before it is brought to the bridge site. The stay-in-place formwork might be quite complex, with shear studs and openings for connection to individual bridge components. The stay-in-place formwork must allow for construction tolerances and be adjustable in the field.

Site Erection. Erection of lower stage cap beams can be accomplished with connections that permit the beams to rest on top of columns, or collars could be used to temporarily support beams. Coordination of girder placement, cap stirrup locations, continuity connections from the lower flanges of girders, and joint reinforcement is required and must consider appropriate tolerances. With skewed bents, coordination becomes more tedious.

The stay-in-place formwork is much lighter than the same size structural component, which simplifies transportation and installation significantly. Very little reinforcement has to be

added in the field if the stay-in-place formwork has been reinforced in the fabrication shop. Alternatively, the stay-in-place formwork could be reinforced with fiber reinforced concrete. The formwork needs a substantial concrete pour. However, if this is a pumped self-consolidated concrete mix, it can be done very efficiently. Oversized holes will require sealing to prevent concrete from leaking out of the form. The formwork has to be designed with sufficient openings to achieve a well-consolidated concrete that can be inspected. Inspection is not difficult for a typical cap beam application.

Substantial shoring might be required if the stay-in-place formwork has not been designed to support itself and the connecting bridge members. The stay-in-place formwork has to be designed to allow adjustments for construction tolerances in the field, such as adjustments for column heights and locations and geometry of connecting bridge members.

Ideally, connecting bridge members are bolted directly to the formwork (if steel members), inserted entirely into formwork and cast monolithically (in the case of concrete members), or connected by inserting individual connection bars. The latter connection requires shear lugs or studs on both sides of the formwork for secure shear transfer. Field welding should be avoided.

Schedule and Cost Risks. The fabrication of precast elements or stay-in-place formwork typically needs a subcontracting fabricator; hence, the supply chain, logistics, and quality assurance must be carefully planned, as required, for all pre-manufactured components.

The integral connection can be designed and planned to have minimum schedule risks on site if all construction tolerances and supplier coordination points are considered in the design and the connection procedure is planned to be insensitive in terms of concrete or grout curing times.

Stay-in-place formwork is much lighter than a precast structural member and can be installed with smaller equipment. This can present a significant cost and schedule advantage as well as reduce the risk of finding available equipment.

Seismic Performance

Integral connections are typically designed to remain elastic as a capacity-protected element, and any structural formwork is designed to provide force transfer and confinement of the encased concrete. Any deformation or energy dissipation elements that penetrate into the integral connection must be designed so their energy-dissipating or deformation elements interface is outside the perimeter of the integral connection. Damage within integral connections remains difficult to inspect and repair.

Energy dissipation of integral column/pier cap connections can be provided at full capacity of the column section within a plastic hinge length in the column, as long as the column longitudinal reinforcement is well anchored into the adjacent integral connection. For this reason, the size of the integral connection can be governed by the length needed to fully develop the column reinforcement, in addition to those dimensions required for adequate joint shear performance.

Testing of an integral cap beam connection of a concrete column with steel girder composite deck has been conducted under NCHRP Project 12-54 at Iowa State University (Wassef and Davis, 2004). The testing found that the composite cap beam remained elastic throughout the seismic testing and plastic hinges formed in the concrete column similar to a column/footing connection. It was found that the large confinement provided by the steel form might allow reducing the confinement reinforcement within the form.

Post-Earthquake Inspectability

It is important that the integral connection is designed to remain elastic (capacity-protected type connection) and potential damage is kept to a minimum in the connection because any inspection and repair beyond epoxy injection would be very difficult. Any rupture of connection reinforcement within the formwork cannot be easily detected, particularly if it is shielded by a stay-in-place form.

Post-Earthquake Reparability

Minor cracking could be repaired by epoxy injection, but this technique would not apply to systems that use structural steel formwork. In general, repair would best be provided by external strengthening of the joint, but the details would be case-specific. Damage in adjacent energy dissipating members, such as a concrete column, can be inspected and repaired in the same way as regular CIP members.

Durability

The durability of an integral connection is high if the internal joints and any stay-in-place formwork are protected from water intrusion and corrosion. With precast concrete integral connections, the durability should be similar to the durability of prestressed girder bridges, because the integration of CIP closure pours and precast elements is of the same form. A long history of such construction shows acceptable durability. In the case of a cap beam with stay-in-place steel formwork, the durability would be the same as for steel/concrete composite bridges, provided that water is prevented from intruding behind the steel forms. Water intrusion is a significant risk, because deck joints are often placed over the pier and they have a long history of leaking. For more exposed connection locations, a more sophisticated corrosion protection scheme must be applied, such as coated or alloy steel, advanced composite materials, or a precast concrete formwork.

Performance and Time Savings Evaluation

The performance ratings of integral connections are provided in Table 16. The construction risk is seen generally as slightly lower than or equal to CIP connections because of the need to fit the girders to prefabricated cap beam elements. The seismic performance is seen as the same, because in both cases the connection should be designed as capacity protected and should respond elastically. Durability is, on average, the same, but is probably slightly better for precast concrete systems because of the higher quality control available in a plant and slightly worse for steel systems because of the risks of water intrusion. Inspectability can be slightly worse, but, in many cases, is equal to CIP. No damage should occur because of the expected

elastic response but, if it does, detection of interior problems in a steel system would be very difficult because the steel formwork masks the concrete inside.

Table 16 Performance Potential Evaluation for Integral Connections

Performance Potential	Definition Relative to CIP	Construction Risk Value	Seismic Performance Value	Durability Value	Inspectability Value
+2	Much better	5			
+1	Slightly better		3	3	
0	Equal	3 4 6 8 9	1 2 4 5 6 9 11	1 2 4 5 6 7 8 9 11	3 5 6 7 8 9 10 11
-1	Slightly worse	1 2 7 10 11	7	10	1 2 4
-2	Much worse		10		

The time savings potential for integral connections is shown in Table 17. The time savings potential is related to the use of precast cap beam elements or prefabricated steel sections. Both types can be filled with concrete after erection of the key components of the connection. The use of precast or prefabricated beam sections has the potential for excellent time savings because the construction of forms in the air and the time of curing for the cap beam concrete are removed from the schedule. However, depending on the scheme for erecting the cap beam, the time savings may be nil, particularly if shoring is required. For conventional girder bridge systems with either single- or multi-column bents, the use of ABC techniques for the cap beam is the single most effective item in producing time savings.

Table 17 Time Savings Potential for Integral Connections

Time Savings Potential	Definition Relative to CIP	Value
+2	Much better	1 2 4 10
+1	Slightly better	7 8 9
0	Equal	3 5 6 11
-1	Slightly worse	
-2	Much worse	

Technology Readiness

Use in Practice. In a survey that formed part of NCHRP Project 12-54, the researchers found that at least 11 states have built at least 59 bridges that included an integral connection between girders, diaphragms, cap beams, or columns (Wassef et al. 2004). In several states with high seismic regions, such as Washington, integral connections are the preferred method for producing moment continuity between the superstructure and columns. Many years of experience are available for the use of CIP integral connections. The use of precast elements in such connections has been on a project-specific basis, typically as the result of value engineering or contractor-proposed changes.

Much of the research performed on integral connections under seismic loading has been sponsored by Caltrans after the 1989 Loma Prieta (California) earthquake during which some concrete bridges with integral connections did not perform satisfactorily and suffered significant damage or collapse. Caltrans research focused on repair and retrofit methods of bridge types

used in California and design methodology improvements based on simple strut-and-tie models. The research has been extended to precast spliced-girder bridges with integral piers and has demonstrated by large-scale testing of a few specific connections that such connections can be satisfactorily designed for seismic loading. The NCHRP 12-54 project focused on the use of integral connections for bridges with a steel superstructure and demonstrated with a one-third-scale test that, using simple strut-and-tie models, allows design of an integral connection that yields a satisfactory seismic response. Overall, there are other types of integral connections that have not been tested, but which have been widely used, that still require attention. Furthermore, testing of SABC concepts for integral connections beyond the use of just precast girders, for instance the use of precast cap beams has not been sufficient to provide the necessary performance data.

Design Guidelines. In general, design guidelines for such a capacity-protected member follow the procedures required for reinforced concrete in the *AASHTO LRFD Bridge Design Specifications* and in the *AASHTO Guide Specifications for LRFD Seismic Bridge Design*. Research projects completed to date have added to the knowledge base for these connections. For instance, the distribution effects of column bending moments to adjacent girders have been proposed. To date, however, tests proving the static strengths and cyclic elastic resistances of this class of connection have not been a primary focus. Infill testing efforts are required. Additionally, some systems that have been deployed widely have not been tested adequately in large-scale laboratory tests.

Technology Readiness Level Evaluation. Based on the preceding discussion, the TRL, and the completeness of development for integral connections are judged to be as reported in Table 18.

Table 18 Technology Readiness Level Evaluation for Integral Connections

Technology Readiness Level (TRL)		**% of Development Complete**			
TRL	**Description**	**0-25**	**25-50**	**50-75**	**75-100**
1	Concept exists				
2	Static strength predictable				
3	Non-seismic deployment				
4	Analyzed for seismic loading				
5	Seismic testing of components				
6	Seismic testing of subassemblies				
7	Design and construction guidelines				
8	Deployment in seismic area				
9	Adequate performance in earthquake				

Summary

In conclusion, integral connections represent a promising detail that for connections of columns, cap beam, and bridge superstructure provide a high TRL for seismic applications and have a significant history of construction experience. Among the individual connections investigated, three have been tested under seismic loading at a large scale (at least one-third of full scale). Limited design information is also available for the following connections.

- Integral connection of a steel superstructure with a steel/concrete composite cap beam and concrete pier per NCHRP 12-54
- Precast spliced-girder bridge with integral concrete column (Holombo et al. 1998)
- Integral connection of a steel superstructure with a post-tensioned concrete cap beam and concrete pier (Patty et al. 2001).

These connections were not specifically designed for ABC and would have to be re-detailed in that regard. However, their testing conclusions and design examples are applicable to ABC because the philosophy for seismic design would be to avoid damage within the integral cap beam.

EVALUATION OF EMERGING TECHNOLOGIES

This section discusses connections that use emerging materials and technologies in combination with prefabricated bridge elements. The category is intended to contain connection types that are at an early stage of development but offer promise, on the basis of some novel feature, if they can be developed further. Two connection types are included.

- Rotational Elastomeric Bearing
- Special Energy-Dissipating Bar Systems

Both have been proposed for use in the context of a hybrid connection. However, they are not evaluated in the Hybrid section of the report because their behavior is expected to be characterized more by their special features than by the post-tensioning. Because they differ significantly, they are described and evaluated separately here.

Rotational Elastomeric Bearing

Description

An elastomeric bearing can be used to provide a region of concentrated deformability at a structural joint. A possible use for such a connection might be to reduce the moment entering the foundation for a given column drift. Caltrans already uses a moment-reducing detail that has the same goal, although it is achieved by forming a concrete hinge rather than an elastomeric one.

This connection type can be used in the following locations.

- Foundation to column
- Column to cap beam

An example is shown in Appendix G, where it is shown as a footing to column connection. It is illustrated here in Figure 27 and Figure 28. Figure 29 shows a photograph of the test specimen during construction.

A steel reinforced elastomeric bearing assembly is cast into both the top of a footing and a short segment of column above. Precast column segments complete the column above, with no mild steel reinforcement to connect the segments. Studs welded to the outer plates of the bearing

connect the assembly to the adjacent concrete. Longitudinal bars are cast into the footing and extend through holes in the bearing into the first cast-in-place column segment above the bearing. The whole column is post-tensioned vertically by an unbonded post-tensioned bar anchored at the footing and cap beam. Shear deformation of the bearing is restrained by a steel pipe around the post-tensioned bar at the center of the bearing.

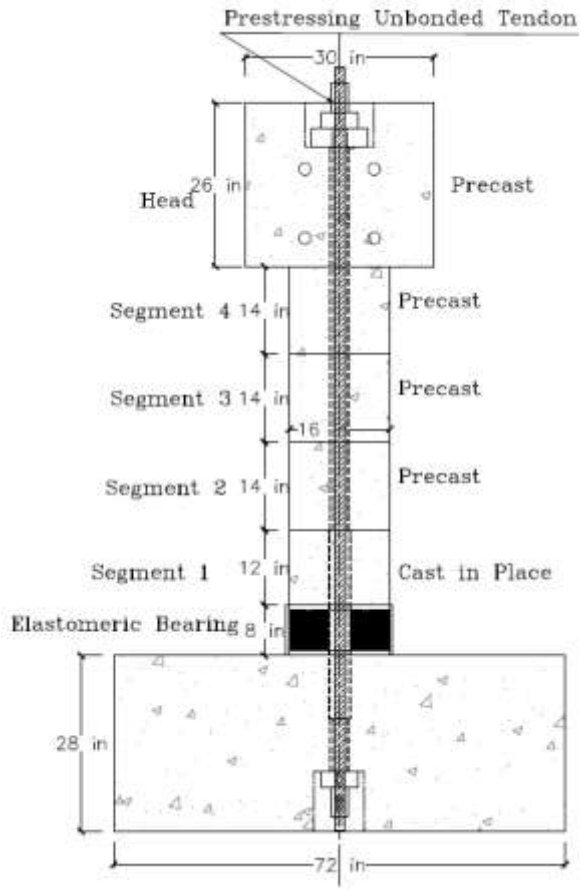

Figure 27 Rotational elastomeric bearing connection test specimen (Motaref et al. 2010)

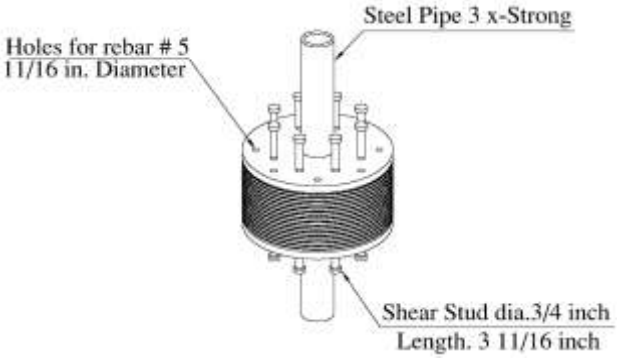

Figure 28 Rotational elastomeric bearing (Motaref et al.)

Figure 29 Elastomeric bearing energy-dissipating bars at column base (Motaref et al.)

Material Requirements

The laminated elastomeric bearing should be fabricated by a specialist supplier. Design guidance is available in the *AASHTO LRFD Bridge Design Specifications*, and material requirements are given in the AASHTO M251 specifications. It should be noted that the bearing design will be a compromise between axial and rotational characteristics. For good axial load carrying capacity, it should have a high shape factor, but for a large rotation capacity it should have a low shape factor. The shape factor is given by $D/(4t)$ where D is the diameter and t is the thickness of a rubber layer. Most seismic isolation bearings, which may be made of similar elastomeric materials, are expected to undergo large shear deformation but little rotation, whereas the devices used here undergo large rotation while shear deformations are prevented by the steel pipe. Thus, the design principles needed for the two cases are quite different.

Construction Risk

The connection is expected to have a high construction risk given its novelty and the number of components that need to be assembled. The construction details of the connections have not been fully developed.

Some construction risk issues to consider are as follows.

- The bearing, energy-dissipating bars and pipe assembly need to be positioned accurately relative to the post-tensioned tendon and supported rigidly during the footing pour.
- Proper consolidation and full contact of the concrete below the bearing assembly may be difficult to achieve and inspect.
- The first column segment above the bearing could be precast to the bearing assembly before being transported to site.
- Constructible post-tensioned anchorage details need to be developed. While a single bar was used in the test, a field installation would almost certainly need a multi-bar tendon.

Seismic Performance

The system has been tested by Motaref et al. (2010) and was compared with a reference column that was identical except that it contained no elastomeric bearing. The two systems were also modeled numerically. The key conclusions reached in that study were as follows.

- The elastomeric bearing connection and the reinforced concrete connection both have the potential to be used in high seismic zones. The bearing provides relatively large energy dissipation, small damage in the plastic hinge zone, and minimal residual displacement that was attributed to the restoring action of the post-tensioning.
- The initial stiffness of the bearing connection was significantly less than that of the companion reinforced concrete connection. In such a system, the moment connection at the other end of the column would have to be able to resist a higher moment than in a conventionally designed bent.
- The bearing connection was able to maintain a high flexural and axial capacity even at a drift ratio of 14%. Because there was no deterioration of strength or bar rupture, its ultimate drift capacity was not measured and the 14% drift should be viewed as the lower bound drift capacity of the column. This far exceeds the rotation capacity that is normally considered necessary for a lateral load -resisting system.
- Buckling of the energy-dissipating bars was effectively restrained by the surrounding rubber and internal steel plates, aided by the shear stiffness of the steel pipe.
- Because the bars were debonded over a relatively long length, the axial deformations could be spread over a relatively long gage length so no strain concentrations occurred and the bars did not fracture, despite the very large rotations achieved.
- The cumulative dissipated energy in the bearing connection was 15% more than that of the companion reinforced concrete connection. It should be noted that the amount of energy that can be dissipated in the rubber depends on the rubber material formulation and the bearing design.
- Energy dissipation in the bearing connection took place mostly through the rotation of the elastomeric bearing and yielding of the longitudinal bars in the base segment. The measured data showed that 56% of dissipated energy was due to rotation of elastomeric bearing and the rest was through the yielding of the bars within the bearing.

Post-Earthquake Inspectability

While the seismic performance of these connections is excellent, post-earthquake inspection of the elements may present some challenges beyond the condition of the exterior rubber. A precise evaluation is not possible without knowing more about the installation details. The following points would need to be considered.

- After a potentially damaging seismic event, rotational bearing connections have a moderate inspectability rating, similar to that of CIP concrete connections. The bearing itself is easy to inspect because the most probable damage would be to the rubber-steel bond at the outer edge of the shims. Bulging rubber would indicate damage due to loss of bond. Removal of the protective rubber on the outside of the bearing would be necessary to see such bond damage. However, this inspection is no different from that required for convention base isolated bridge applications.
- The bearing connection would have to be fire-proofed, so the fireproofing material would have to be removed to permit inspection.
- Inspecting the post-tensioned bars would be difficult because they are located near the center of the column section. If the tops of the anchorages were kept accessible, then the bars and anchors could be inspected. Post-tensioned bar anchors at the base of the footing are blind, so cannot be inspected.
- Rebar passing through the elastomeric bearing could fracture and would be difficult to inspect visually. It is possible that an imaging technique could be used to detect such a fracture, but such a procedure is likely to be time-consuming and expensive.
- An investigation for fractured bars outside the bearing would probably require removal of some concrete. In that case, the procedure would be less invasive if the bars are located near the surface of the element than if they are in the middle of the cross section.

Post-Earthquake Reparability

The reparability of an elastomeric bearing connection is probably worse than that of a CIP connection, but it is also less likely to need repair if the two systems are subjected to the same deformation levels. Because the elastomeric bearing system is more flexible than the concrete one, it is possible that it will undergo larger deformations. Despite this, the expected rotation capacity/demand ratio is likely to be larger in the bearing system, which is, therefore, less likely to need repair. This is fortunate, because replacing the bearing assembly would be very difficult.

Durability

The durability of the bearing itself is likely to be good. Elastomeric bearings have been used in bridges to accommodate expansion for about 60 years and heavily loaded seismic isolation bearings have a history of about 25 years. Both have demonstrated good durability. By contrast, the steel components (pipe, energy-dissipating bars, and post-tensioned tendon) are relatively vulnerable to deterioration through corrosion, depending on their protection details. Design of joints and drainage features of the bridge should account for the presence of the post-tensioning, which needs protection from the environment.

Performance and Time Savings Evaluation

This connection is given a -2 for construction risk due to the complexity of embedding a prefabricated element in the footing and for the additional complexity of the construction of the bearing element and assembly (see Table 19). Of course, with any emerging technology similar concerns would be the case. It is likely that the construction risk would be lowered if such construction were to become commonplace. The seismic performance is given a +2, because the displacement capacity of this connection type is outstanding relative to other considered connections. The durability of the connection is given a -1 due to the incorporated joints between the concrete and the elastomeric bearing. Such a joint can permit deleterious materials to intrude, leading to corrosion problems

Table 19 Performance Potential Evaluation for Emerging Technology Connections

Performance Potential	**Definition Relative to CIP**	**Construction Risk Value**	**Seismic Performance Value**	**Durability Value**	**Inspectability Value**
+2	Much better		1		
+1	Slightly better		2		
0	Equal				
-1	Slightly worse			1 2	1 2
-2	Much worse	1 2			

The times savings rating for elastomeric bearing connections is given a -2 due to the complexity of construction and the fact that the assembly must be cast into the foundation (see Table 20). This could cause alignment problems if the placement of the lower segment is not controlled very carefully.

Table 20 Time Savings Potential for Elastomeric Bearing Connections

Time Savings Potential	**Definition Relative to CIP**	**Value**
+2	Much better	
+1	Slightly better	
0	Equal	
-1	Slightly worse	
-2	Much worse	1 2

Technology Readiness

The technology readiness level and the completeness of development for elastomeric bearing connections are shown in Table 21.The concept of installing an elastomeric bearing to provide local rotational flexibility has been developed and initial, proof-of-concept, testing has been conducted. The system has not been deployed in the field, for either non-seismic or seismic applications. Many details require further development, particularly with regard to constructability. It is also important to consider the system aspects of such a connection. For example, it is unlikely that it would be a suitable choice for a single-column bent or other statically determinate structure.

Table 21 Technology Readiness Level Evaluation for Elastomeric Bearing Connections

Technology Readiness Level (TRL)		% of Development Complete			
TRL	**Description**	**0-25**	**25-50**	**50-75**	**75-100**
1	Concept exists				
2	Static strength predictable				
3	Non-seismic deployment				
4	Analyzed for seismic loading				
5	Seismic testing of components				
6	Seismic testing of subassemblies				
7	Design and construction guidelines				
8	Deployment in seismic area				
9	Adequate performance in earthquake				

Special Energy-Dissipating Bar Systems.

Description

Nickel-titanium alloy bars have been explored for use in earthquake engineering applications. This and other shape memory alloys (SMAs) have the unusual properties of superelasticity (stress-related) and shape memory (temperature-related). Both of these behaviors are related to phase transformations of the material between austenite and martensite. A superelastic material can undergo very large inelastic strains and recover them after the removal of the applied stress. The superelastic behavior shown in Figure 30 is described in Youssef et al. (2008). Structural engineering researchers are interested in leveraging the superelastic properties of SMA bars to create low residual drift lateral systems.

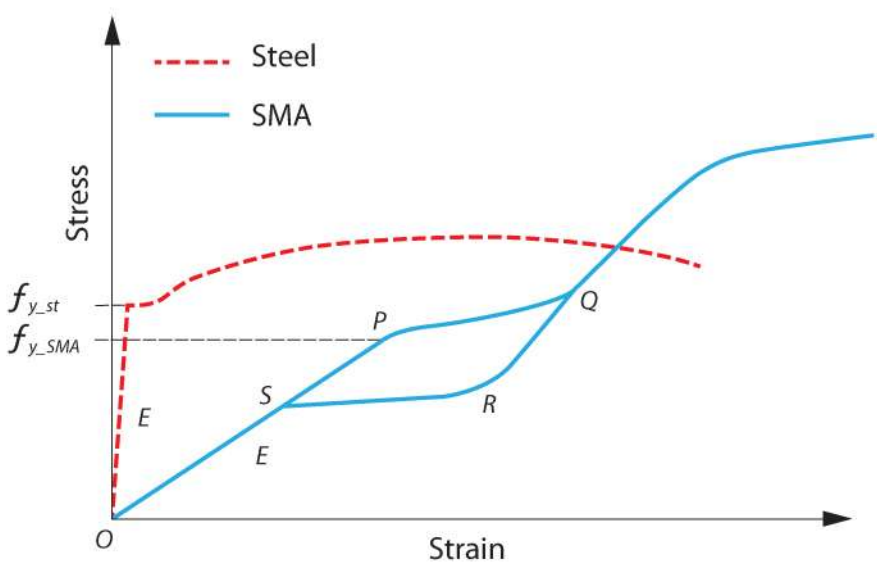

Figure 30 Stress-strain behavior of SMA and steel

One example of these connections is shown in Appendix G and in Figure 31. The details are not fully represented and the construction procedure is not described by the researchers, but an attempt has been made to describe a possible method of assembly. The connection is part of a hybrid system that uses unbonded SMA bars for energy dissipation and unbonded post-tensioning strands for re-centering. The column is composed of precast concrete segments with clamped steel plates at the joint to prevent joint opening. Threaded studs and a post-tensioned tendon anchorage are cast into a concrete footing. Unbonded SMA bars are screwed into the threaded studs and extend to the height of the first column segment. The first column segment is placed over the SMA bars. The top of each SMA bar is secured to the top of the first concrete segment or clamped to steel plates with a nut.

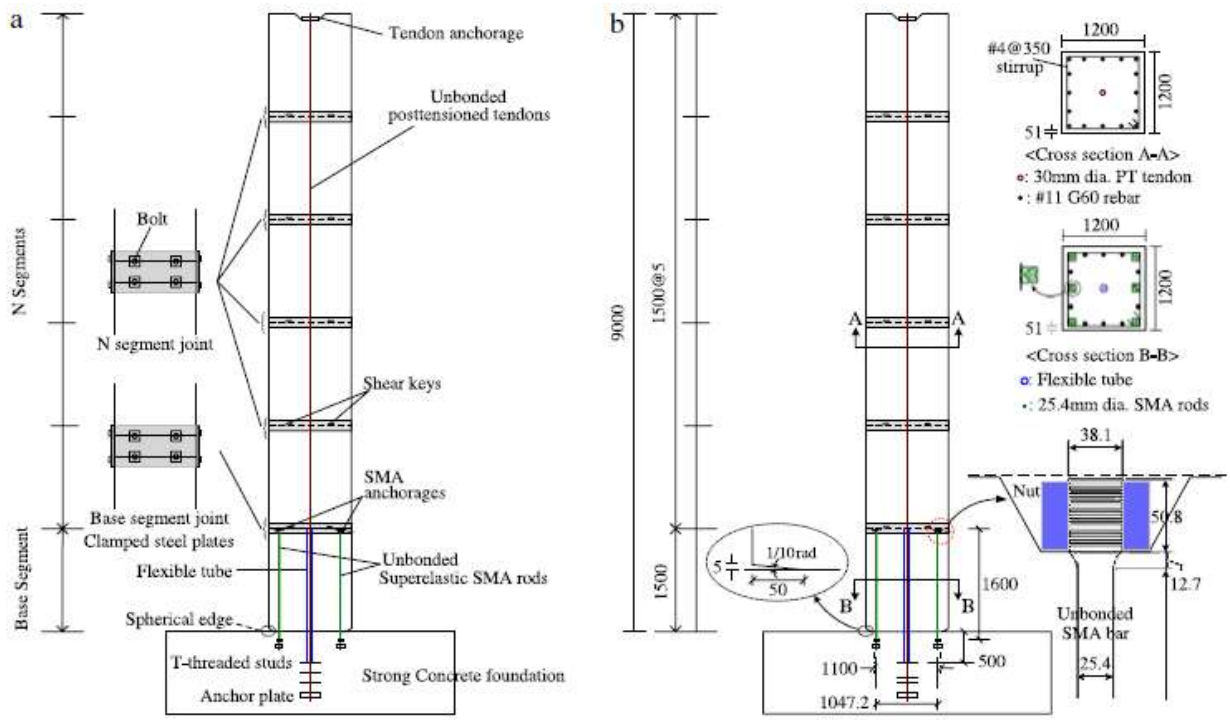

Figure 31 Precast segmental column with shape memory alloy bars (Roh and Reinhorn 2010)

Material Requirements

SMA bars can be manufactured with various metal combinations and proportions. One alloy used in earthquake engineering research is 55% nickel and 45% titanium.

Construction Risk

The novelty of materials such as the SMA bars leads to a high construction risk. The construction details of the connections have not been fully developed. Some construction risk issues to consider are as follows.

- Connecting SMA bars to other materials is difficult. It is difficult to machine them or weld to them. Mechanical screw-lock couplers have been proposed to splice SMA bars to mild steel (Youssef et al. 2008).
- Couplers used to splice SMA bars must be accurately positioned and vertically aligned. Screw-lock or threaded couplers have small lateral and rotational tolerances.
- SMA is not a standard construction material; therefore, the cost is high and knowledge of its proper use and installation is limited.

Seismic Performance

Analytical studies by Roh and Reinhorn (2010) explored the seismic performance of unbonded SMA bars used to connect a segmental, unbounded, post-tensioned column to a footing. The analysis showed that the system could dissipate energy, attain high drifts with little structural damage, and re-center after a seismic event. However, these characteristics can also be obtained by a hybrid system that uses an unbonded post-tensioning tendon in parallel with bonded mild steel ED bars.

Youssef et al. (2008) performed experimental tests on building beam-column joints reinforced with SMA bars (see Figure 32). The SMA bars were placed only in the beam plastic hinge zone and were spliced on either end to mild steel reinforcement. The SMA specimen was compared to a mild steel specimen. SMA bars have a lower modulus of elasticity than mild steel, resulting in a larger story drift. Energy dissipation is less than a conventionally reinforced concrete column.

Experimental testing by Saiidi et al. (2009) demonstrated that SMA bars can be combined with engineered cementitious composites (ECC) in bridge columns to further mitigate residual displacements and damage after cyclic loading. Residual displacement of the SMA and ECC specimen was 1/6 of the mild steel reinforced concrete column.

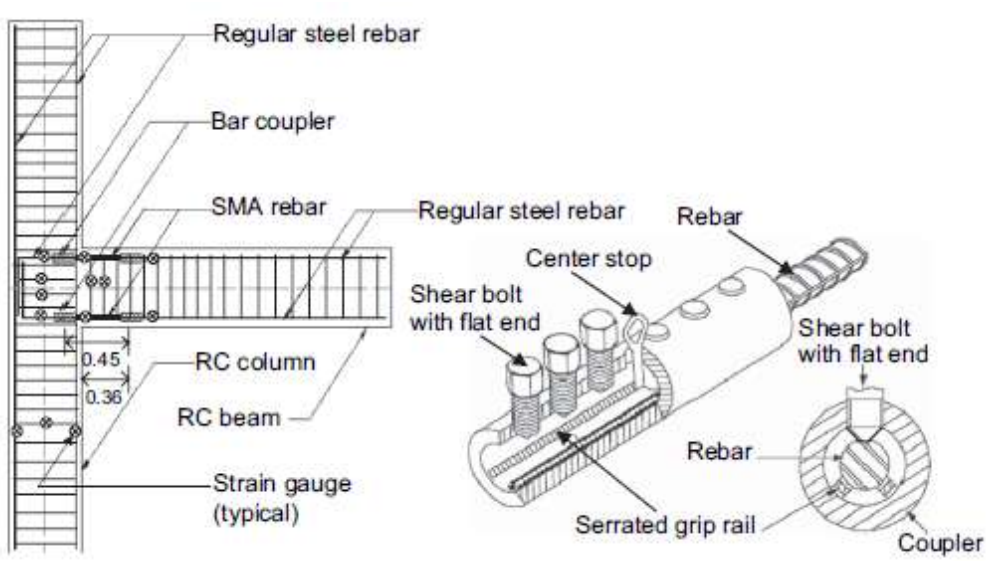

Figure 32 Beam-column joint with coupled SMA bars (Youssef et al. 2008)

Post-Earthquake Inspectability

The inspectability of SMA bars is similar to mild steel reinforcement. The connections between the SMA material and the body of the connected element (e.g., the coupler shown in Figure 32) may be more susceptible to damage than the bar itself.

Post-Earthquake Reparability

SMA bars can undergo large strains and have good low and high cycle fatigue performance. Thus, damage is less likely than in a steel-reinforced system if the drifts of the two systems are the same. If damage occurred, it would be more difficult to replace an SMA bar than a mild steel bar. The threaded ends would likely be difficult to align and reconnect.

Durability

SMA bars have high corrosion resistance, so their durability is better than the mild steel used in standard CIP construction.

Performance and Time Savings Evaluation

At this point in their development, SMA bars have worse performance and take more construction time than conventional CIP construction with mild steel. From the seismic performance perspective, the material behavior is very attractive: energy dissipation with minimal residual strains, high strain capacity, high corrosion resistance, and good low and high cycle fatigue properties. However, the difficulties with constructability, the high material cost, and the additional time required to splice SMA bars suggest that the technology is not ready for use in ABC. The scores for this connection type are shown in Table 19 and Table 20 as connection 2.

Technology Readiness

SMA bars are a relatively new technology in structural engineering. Only a handful of studies and tests have examined the material's advantages and disadvantages for use in lateral force resisting systems. SMA bars have not been experimentally tested for use in precast bridge elements. Experimental testing of a constructible SMA connection detail with prefabricated bridge substructure elements needs to be completed before considering SMA technology for use in ABC. TRL values are given in Table 22.

Table 22 Technology Readiness Level Evaluation for Emerging Technologies

Technology Readiness Level (TRL)		**% of Development Complete**			
TRL	**Description**	**0-25**	**25-50**	**50-75**	**75-100**
1	Concept exists				
2	Static strength predictable				
3	Non-seismic deployment				
4	Analyzed for seismic loading				
5	Seismic testing of components				
6	Seismic testing of subassemblies				
7	Design and construction guidelines				
8	Deployment in seismic area				
9	Adequate performance in earthquake				

TIME SAVINGS

The distinguishing characteristic of the bridge bent systems considered in this study is speed of construction, so some way of measuring it was necessary in order to evaluate the systems. Because of the wide variety of systems reviewed, a sophisticated method for evaluating the required construction time was deemed impractical. The method chosen is described in Chapter 2, and consisted of comparing the construction time of the precast system with that needed for a conventional CIP system. A mini-workshop was arranged to obtain estimates of construction time from professional design and construction personnel.

As the project developed, it became clear that most of the connection technologies could be applied in several locations within the bridge. Thus, the decision was made to base the evaluations of performance, TRL, etc., on connection technology rather than on connection location.

A test bed structure was needed to make comparisons between the connection technologies. For that purpose, a bridge bent was selected that had dimensions typical of a freeway overpass in Washington State. It is shown in Figure 33. The results of the time savings workshop are presented in Table 23.

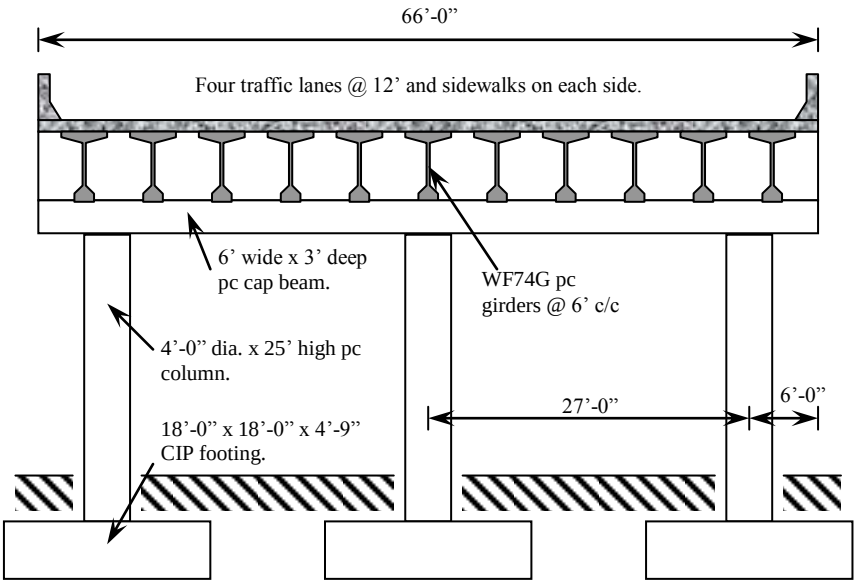

Figure 33 Bridge bent considered for time savings evaluation

Table 23 Construction Time Savings for Typical Bent

Summary of Construction Time Savings (in days) for Each Connection Type						
	Construction Steps	**Cast-in-place**	**Bar Couplers**	**Grouted Ducts**	**Pocket**	**Socket**
Column to Footing	Excavate footing	1	1	1	1	1
	Build footing formwork	2	2	2	2	2
	Set footing rebar	1	1	1	1	1
	Set column steel	1				
	Pour footing concrete	1	1	1	1	0.5
	Grout bedding layer		0.25			
	Set/level column		0.25	0.25	0.5	0.5
	Grout couplers		0.5			
	Grout bedding and ducts			0.25		
	Pour pocket concrete				0.5	
	Build column formwork	1.5				
	Pour column concrete	1				
	Concrete curing to 1,500 psi	--			2	2
	Grout curing time		1	1		
	Footing to column time	8.5	7	6.5	8	7
	Column Savings		***1.5***	***2***	***0.5***	***1.5***

Summary of Construction Time Savings (in days) for Each Connection Type						
	Construction Steps	**Cast-in-place**	**Bar Couplers**	**Grouted Ducts**	**Pocket**	**Socket**
Cap beam to Column	Build shoring/soffit	4				
	Set cap beam rebar	2				
	Finish formwork/pour concrete	1				
	Set shims/shoring and survey		1	1	1	1
	Set/level cap beam		0.25	0.25	0.5	0.5
	Grout bedding layer		0.25			
	Grout couplers		0.5			
	Grout bedding and ducts			0.25		
	Pour pocket concrete				0.5	
	Grout interface of column/cap					0.5
	Grout cure time		1	1		1
	Cure time to 80% (5 days min)	5			5	
	Column to cap beam time	12	3	2.5	7	3
	Cap Beam Savings		***9***	***9.5***	***5***	***9***
Total	Total time	20.5	10	9	15	10
	Total savings		**10.5**	**11.5**	**5.5**	**10.5**

The time estimate for casting the bent in place, starting with excavation of the footing and ending with completion of the cap beam to a stage at which it was ready to accept girders, is given in the first numerical column of the table. Time estimates are given for each step in the process. One of the major time expenditures is waiting for the concrete to cure sufficiently to permit the next operation to be undertaken. It should be noted that, with a CIP cap beam system, no time was allowed for curing the column because it was assumed that other critical path operations, such as preparing shoring for the cap beam, could be undertaken during that time. By contrast, curing time for the cap beam is included because the next critical path item after that is setting the girders. The total construction time for the CIP system is 20.5 days. The curing time for concrete was taken as 5 days, because that is the minimum permitted by the Washington State DOT when significant load must be carried by the element.

Time estimated was also prepared for four precast technologies: bar couplers, grouted ducts, pockets, and member sockets. The results are shown in numerical columns 2 through 5 of the table. Two versions of the socket connection were considered, but, because they gave identical total times, they are reported here as one. (In one case, the footing was CIP around a precast column, while in the other the footing was CIP with a central void, formed with a corrugated steel tube, and the precast column was then grouted into that void).

The major conclusions from the time savings study are as follows.

- The required curing time before construction may progress has an important influence on the total construction time.

- In the precast systems, the majority of the time savings arises from precasting the cap beam.
- Precast columns provide significant time savings only under special circumstances, such as a bridge with a large number of columns.
- Most precast connection types reduced bridge bent construction time by 50% relative to CIP.

The table shows that three of the precast technologies provide almost identical time savings of approximately 11 days. Because the times were necessarily estimates, the differences between them of 0.5 days should be ignored. The fourth system (the Pocket Connection) led to a longer construction time and, hence, reduced time savings, almost entirely because of the need to wait 5 days for the concrete in the pocket to cure. This was judged to be necessary because the bars in the pocket may need to resist tension if all the girders are set on one side of the cap beam before any are set on the other side, thereby inducing torsion in the cap beam and a moment in the connection between column and cap beam. In fact, this is the way that the girders are likely to be set. In the other three connections, the cap beam is secured by grouted bars and the curing time for the grout is typically based on achieving a specified strength rather than on a minimum cure time. If different assumptions were made about curing times, the Pocket Connection might result in time savings similar to those of the other precast technologies.

The discussion at the workshop on time requirements showed that the potential time savings were more closely related to the characteristics of the bridge bent system as a whole rather than to any particular connection technology. In particular, the choice of precasting the cap beam rather than casting it in place made the dominant contribution to time savings.

Precast columns typically provide smaller time savings and are often less attractive to contractors. Precasting requires either subcontracting with a precast fabricator, which involves the administrative effort of preparing a request for bids and contract documents or setting up a precasting facility on or near the site. In both cases, these costs are likely to be undertaken by the contractor only if the number of columns is sufficiently large or if some other special condition justifies it. This is unlikely to be the case in a typical freeway overpass. The contractor might, therefore, choose to cast the columns in place but to precast the cap beam. That said, at least two examples were found (in different parts of the country) in which the original design called for CIP columns, but the contractor submitted a Cost Reduction Incentive Proposal to change them to precast. These example suggests that, while general trends may exist in ways to reduce construction time, the choices made by contractors to achieve that goal will encompass a wide variety of methods.