APPENDIX B. LOAD FRAME

This Appendix will describe the philosophy in the design and operation of the loading system.

LOAD FRAME

The large-scale gusset plate testing required a unique loading fixture. A plan and elevation schematic of the load frame with the first specimen installed is shown in Figure B1. Each pair of gusset plate test specimens connected five members; a compression diagonal, a tension diagonal, two chord members, and a vertical. The roles of the four shear walls shown in the figure were to resist the axial loads in the two diagonals and one vertical member of the connection. The two abutments cast between the walls resisted axial loads in the chord members of the connection.

Six 1000-ton Enerpac jacks were acquired to apply loads to the members. The Enerpac systems are designed for a 10,000 psi hydraulic pressure. However, computerized, servovalve control of the jacks is not attainable at these pressures and instead a MTS 3,000 psi hydraulic supply was used for the gusset plate testing. Using this lower hydraulic pressure limited the force in each jack to approximately 670 kips. Therefore, for each diagonal and the east chord, two jacks will be paired to achieve a maximum applied load of 1340 kips in each of those members, though a maximum capacity of 1200 kips was assumed for the design of the experiments.

Four W18x192 steel sections were used to transfer the forces from the compression diagonal to the two shear walls shown on the left of Figure B1. The details of this arrangement, which will accommodate the mounting of the two Enerpac jacks, are shown in Section C-C of Figure B1. These four steel sections will be attached to each shear wall with eight DYWIDAG bars. These bars, in turn, are connected to DYWIDAG couplers embedded 42 inches deep into each shear wall. In the arrangement shown, only eight of couplers are being utilized to secure the steel sections to each wall. However, eighteen couplers were embedded in each shear wall along the diagonal edge so the steel sections and jacks can be repositioned to account for an entry angle of the diagonal into the gusset connection of 45° ± 7.75°. Though the load frame was constructed with the ability to vary the framing angle of the diagonals, only specimens with a 45 degree entry angle were tested. A custom built-up section spans between the two jacks and transfers both jack forces into a 12 inch fixed spherical bearing. The bearing sits atop the compression diagonal and allows for a rotation between the compression diagonal and the jacks, but no translation.

The two shear walls shown on the right of Figure B1 are used to apply the axial load to the tension diagonal. Each of the jacks sat directly upon the diagonal edge of the wall as shown in Section D-D. As for the compression diagonal, the shear wall could accommodate positioning the jacks for the tension diagonal at an angle of 45° ± 7.75°. To keep the Enerpac jacks that weigh approximately 3200 lbs each in place, they were attached to the shear wall through threaded inserts embedded along its diagonal edge. The two W18x192 shapes that make up the beam spanning between these two jacks were used to transfer the jack load to the tension

diagonal. As shown in the figure, this load transfer was made with two pull plates welded to the spanning beam and connected to the tension diagonal with high-strength bolts.

The vertical member of the connection was loaded with two double acting MTS jacks each capable of applying 220 kips of tension or compression. Each of these jacks is attached to W18x192 steel sections that spanned longitudinally between the east and west shear walls. The steel sections were post-tensioned to the walls with DYWIDAG bars connected to embedded couplers within the wall allowing the actuators to apply up to 440 kips of tension or compression to the vertical.

Each shear walls was post-tensioned to the strong floor in order to resist the loads being applied to the diagonal connection members. Seven post-tensioning ducts provided inside each wall accommodate 1.75 inch diameter DYWIDAG bars capable of developing approximately 850 kips of shear resistance between the base of each wall and the strong floor.

Two large abutment blocks cast in-between the two shear walls on each side of the load frame were for mounting and loading the chord members. As shown in Figure B1on the left side of the frame, the fixed chord was grouted and pretensioned to the abutment with six DYWIDAG bars to transfer tension and compression loads. The abutment on the right side of the frame resisted forces from the two Enerpac jacks that applied loads to the chord. In the scenario shown in Figure B1 the jacks can only apply compression to the chord. However, ducts cast into the east abutment also allow for the repositioning of the jacks to the opposite side of the abutment in order to apply a tension load in the chords. The alternate positioning of the chord jacks can be seen in Figure B2.

Shear Wall Design

The shear walls became an integral component to the functionality of the loading system as each pair was resisting the load from one of the diagonal members. This section will describe the many constraints that ultimately determined the shape the shear walls. These constraints were:

1. The height of the shear walls was constrained by the 23.5 feet of clearance between the strong floor and the crane hook of the Structures Lab.

2. The weight of each shear walls had to be under the lifting capacity of two 20-ton overhead cranes in the Structures Lab. Considering equal distribution to the two pick points, this would be 80 kips total for each wall.

3. The overall dimensions of the shear walls were constrained by a need to remove them from the lab through the large bay door for future disposal purposes.

4. The design of the shear walls needed to maintain as much symmetry as possible to facilitate fabrication.

The diagonal edge angle of the shear wall was selected so that the jacks could be easily mounted for diagonals framing into the gusset plate connection at 45°. The walls were cast lying on their side to eliminate any concern of poor consolidation along the diagonal edge that may have resulted had they been cast in the vertical position. Casting in this position limited the height of the wall to 20 feet because the DYWIDAG bars that will ultimately pass through the strong floor would have to be in the wall prior to the erection. These DYWIDAG bars are 24.5 feet long and as the wall was rotated into a vertical orientation, they would have to clear the bottom of the crane rails. Once the plan dimensions of the wall were determined, the thickness of 18 inches was determined from the capacity of the overhead cranes.

The walls were reinforced with as many multiple layers of horizontal, vertical, and diagonal grade 60 rebar as could fit within the 18 inch width. The shear walls were analyzed with finite element methods to ensure that cracking will not occur at the full capacity of the jacks. However, if cracking did occur, enough rebar was detailed across the potential failure planes to transmit the resulting tension neglecting any contribution from the concrete.

Work Point Bracing

The six experimental specimens in the Phase 2 testing matrix were all tested with an out-of-plane restraint bolted at the work point. A schematic of the brace is shown in Figure B3. The brace was comprised of three main components, a pedestal, two tubes, and two tee sections. The pedestal was a prefabricated element commonly used in the Structures Lab made from two S-shapes welded between thick plates. It was post-tensioned to the lab strong floor and provided the shear transfer of out-of-plane forces to the lab strong floor. The two steel tubes were the connection element between the pedestal and the gusset plated connection. Two tubes were used because it was the most convenient means of connecting to the two webs of the pedestal. At the gusset plated connection, each tube in turn bolted to tee sections that were directly bolted to the gusset plate. Spacer plates were added between the tee and gusset plate such that bolts that would interfere with the web of the tee could still be installed through the gusset and splice plates.

The connecting plates bolted to each end of the tubes were orthogonal to each other and bolted to the pedestal and tees with a single bolt. This allowed for the gusset plated connection to freely translate east-west and up-down, yet maintain a constant displacement in the north-south direction. In addition, four strain gauges were adhered to each tube and configured as a full-bridge in essence turning the tube into a load cell. The tube load cells were calibrated and monitored throughout test to better understand the loads that develop to restrain out-of-plane movement.

Member Design

The five members comprising the gusset plate connection were reused through the testing program. The desire to reuse the members for each test dictated certain constraints in the dimensioning on these components. In particular, some plate thicknesses were selected larger

than needed with regard to strength in order to prevent any deformation around the holes if/when the bolts go into bearing.

Members that will primarily carry compression were designed as welded box sections, and those primarily carrying tension were designed as built-up I-sections. Access holes are provided on the box members to facilitate bolt installation and met the AASHTO detailing guidelines for perforated plates (AASHTO LRFD 6.8.5.2).

To ensure the members would remain elastic up to peak jack capacity, the members were designed using the AISC 360-05 "Specification for Structural Steel Buildings" allowable stress design methodology (AISC, 2005) since that design philosophy lends itself better to designing lab specimens with known ultimate loads. The steel was A514 Grade 100 material to make the sections as small as possible. The two diagonals and two chords were designed to resist a maximum load of 1200 kips. The vertical member was design to resist 440 kips in tension or compression. The width of the connection was set to 11 inches. The box sections used for the chords and compression diagonal were 14.5 and 14.0 inches deep respectively to resist the design load. The tension diagonal and vertical were both welded I-shapes with flange widths of 14 inches and 8 inches respectively. The detailing of the individual members is shown in Figures B4 through B8. No attempts were made to chamfer the ends of the diagonals so they could fit very close to the chords and vertical. This was done to simplify the Whitmore stress checks and to maximize the area of unsupported gusset plate between a diagonal, chord, and vertical.

The box members were drilled with 15/16 inch diameter holes on a 2.5 inch gage and pitch. The built-up I-section also had 15/16 inch holes on a 2.5 inch pitch, but the gage was variable to accommodate interference with the web and to uniformly load the flange. More bolt holes were provided in the members than needed for strength to accommodate various gusset plate sizes and bolt patterns.

CONTROL OF LOADING SYSTEM

The Enerpac jacks were each fitted with an externally mounted servo valve, differential pressure cell, and an LVDT. A special manifold for mounting the MTS 660.23A deltaP cell was strapped to the side of the jack. The servo valve then bolted atop the manifold. This complete assemblage routed the hydraulic fluid to the jack as well as measuring the differential pressure on each side of the piston which could be calibrated to the overall load in the jack. An Omega LD300 linear-variable differential transformer (LVDT) with ±150mm range was also strapped to the side of jack to measure the stroke of the jack. The LVDT was spring loaded and reacted off a custom machined plate that cantilevered off the top of the cylinder. The 220 kip actuators have integral LVDTs and load cells for measuring the load and displacement of the cylinder.

Control over the eight jacks in the load frame was accomplished via a MTS FlexTest GT controller. The controller had enough servo valve drivers and universal conditioners so all eight jacks could be run in either load or displacement control. The controller also has 16 analog

outputs so the load and positions of each jack could be recorded via an external data collection system.

The controller was operated via the MTS Multi-Purpose Testware (MPT), which is a software package allowing users to create complex loading programs to control servo valve hydraulic actuators. The software has the capability to utilize calculated channels for controlling various command channels. Calculated channels allow mathematical functions to be applied to signals, and through use of virtual channels, servo valve(s) can be controlled via the calculated channel.

Figure B9 outlines a flow chart depicting how the eight actuators were controlled during the gusset plate tests. In all four locations where the actuators are paired together, one actuator is designated the master and the other the slave. The master actuator for the chord and two diagonal members were commanded in displacement control. The corresponding slave actuator in each pair was load slaved off the master's load (i.e. in load control to constantly match the master's load). To accomplish this within FlexTest, a combination of calculated and virtual channels were used to "drive" the difference in force between the master and slave actuators to be zero, thus matching the force in the slave to that of the master. For the vertical member, both actuators were run in load control. One of the primary reasons for the difference in control methodology for the Enerpac actuators is due to the use of the differential P-cells to monitor pressure in the actuators. Due to the amount of noise obtained in the electrical output signal of the Pcells, each master actuator of the Enerpac pairs will be commanded using displacement control, while the master of the two 220 kip vertical actuators (which have integral load cells) will be commanded in force control.

For the displacement controlled master actuators, a typical loading scenario has two logic components, a "ramp up" and "ramp down" component that determines the proper movement direction of the piston to approach the force limit. In the "ramp up" logic component, the master actuator is commanded in displacement control to increase displacement at a specified rate and once the combined force in a pair of Enerpac actuators reaches its force limit (within a given tolerance), that particular displacement ramp halts and the pair of actuators maintain a fixed displacement boundary. The problem is the program continues to run the remaining Enerpac actuators until they reach their force limit (and the vertical actuators if they also have not reached their force limit), so depending on stiffness distribution, the force in the actuators that have halted could either increase or decrease beyond their intended force limit. In the case where the force in one or more actuators at the end of a ramp up cycle is far above its targeted value, the "ramp down" logic component can be run. In the "ramp down" logic component, the master actuators of the Enerpac pairs are commanded in displacement control to decrease displacement (and hence force) at a specified rate. Once the combined force in a pair of Enerpac actuators reaches its force limit (within a given tolerance), that particular displacement ramp halts and the pair of actuators maintain a fixed displacement boundary. The same problem arises in a "ramp down" cycle that some actuators may still be loading while other actuator pairs may be held at a fixed displacement. In this manner the "ramp up" and "ramp down" logic components can be used iteratively until the target values of each pair are reached simultaneously. Each successive

ramp up/ramp down cycle is separately programmed for successive target force values. Note that Figure B9 shows only the ramp up cycle for clarity.

Horizontal equilibrium is enforced in the loading scheme by careful control of the loading rate of the vertical pair of actuators. Care must be taken to maintain vertical equilibrium with the force in the vertical actuators because it can only additionally be resisted by bending of the west chord. The elastic strains, and hence stresses in all members are monitored to detect any potential excessive bending of the chord member which would then require adjustment of the magnitude or rate of loading for the vertical actuators.

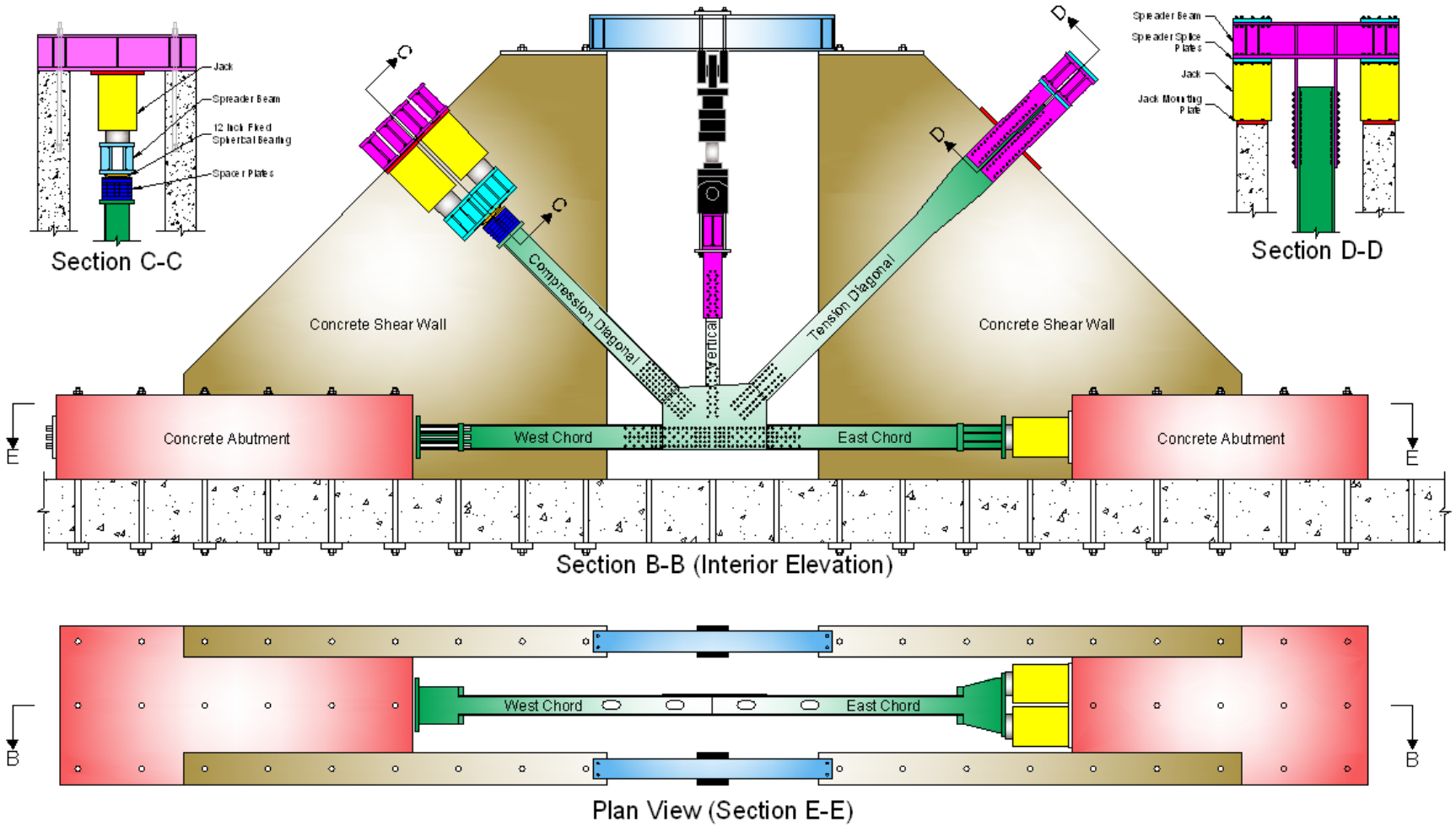

Figure B1. View of load frame.

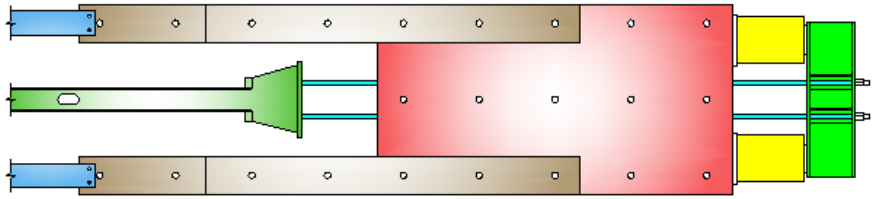

Plan View

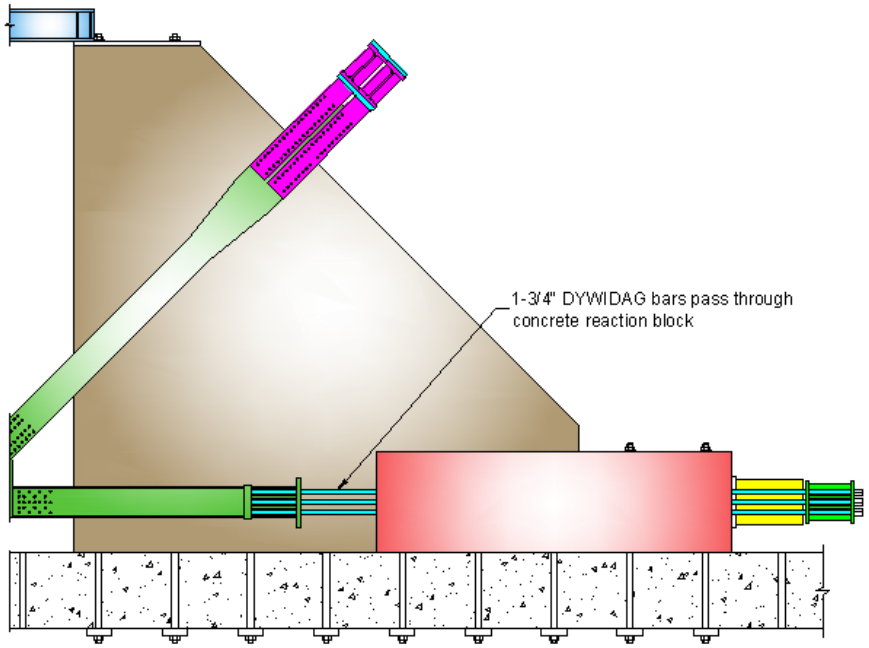

Elevation View

Figure B2. Alternate positioning of chord jacks for tensile loading.

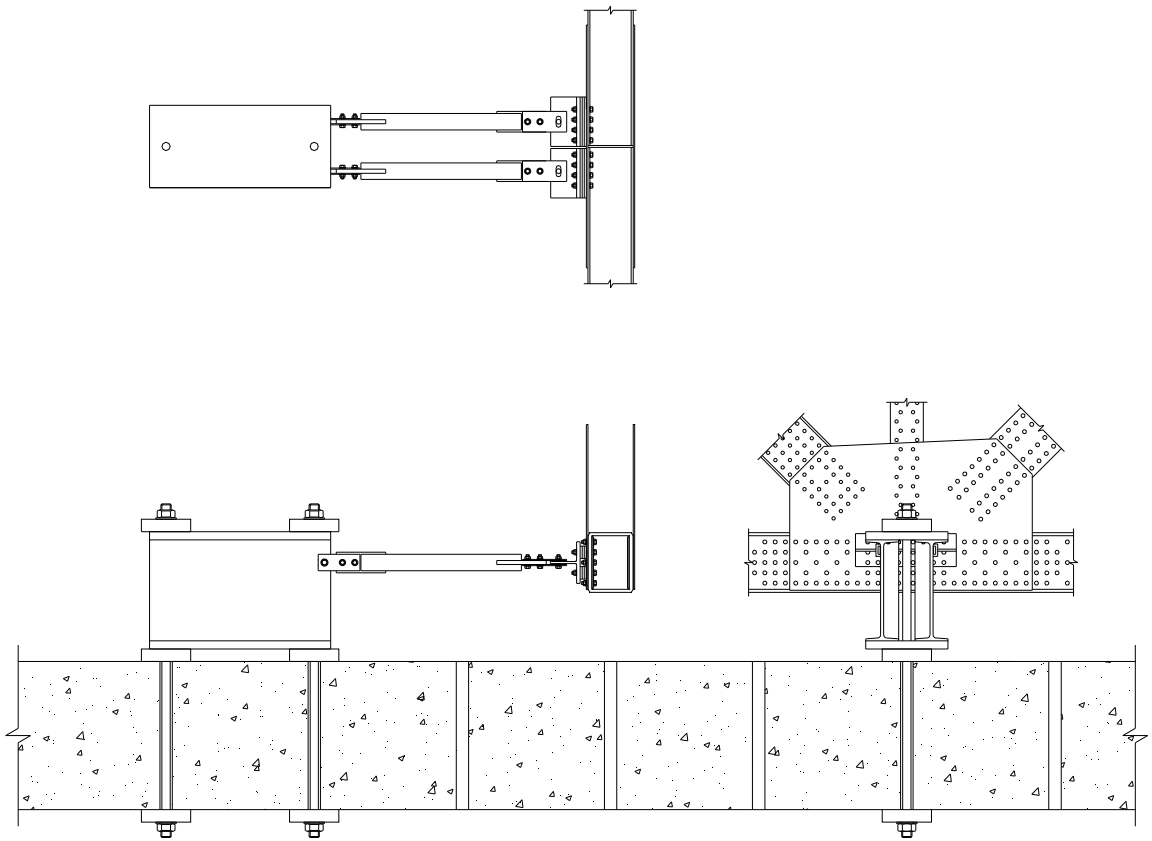

Figure B3. Three-view schematic of work point brace.

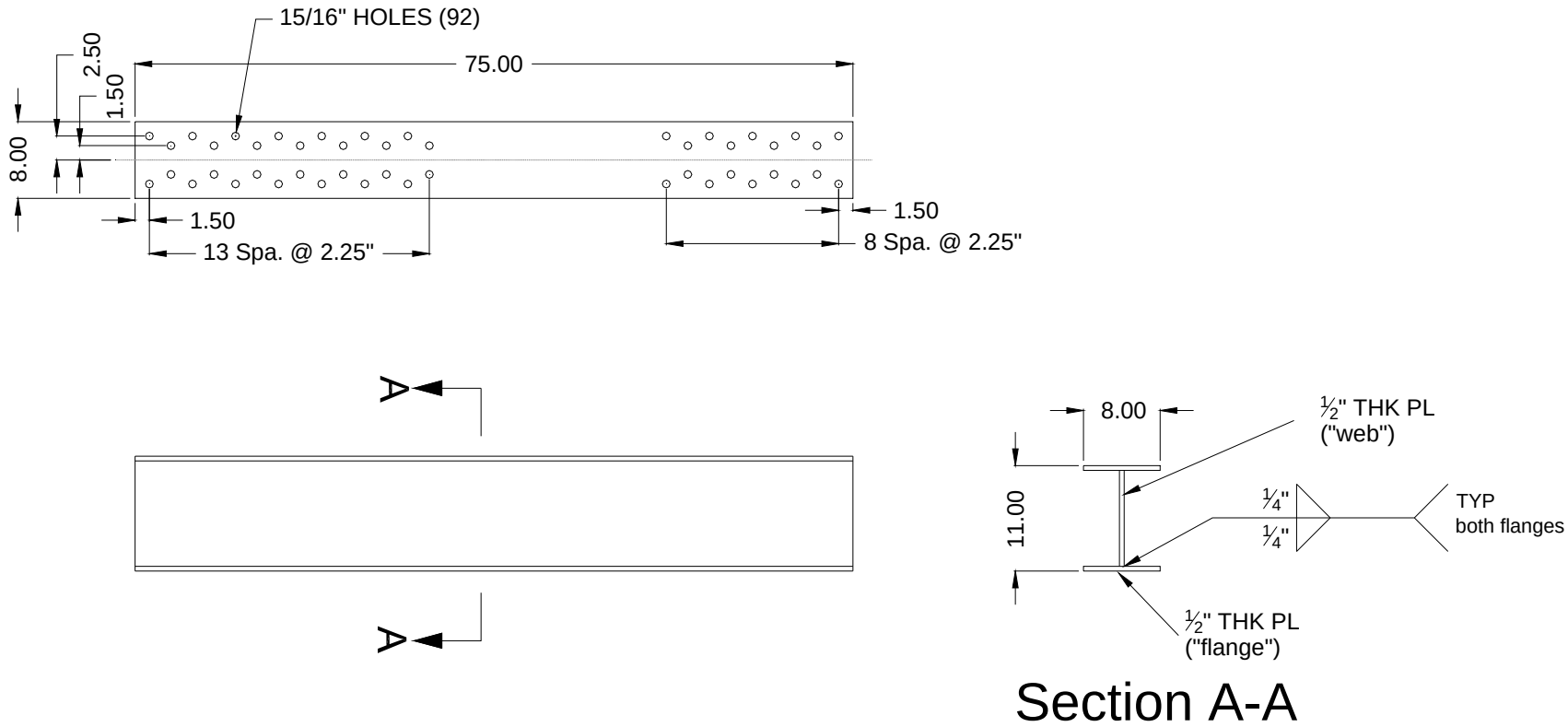

Figure B4. Vertical member dimensions.

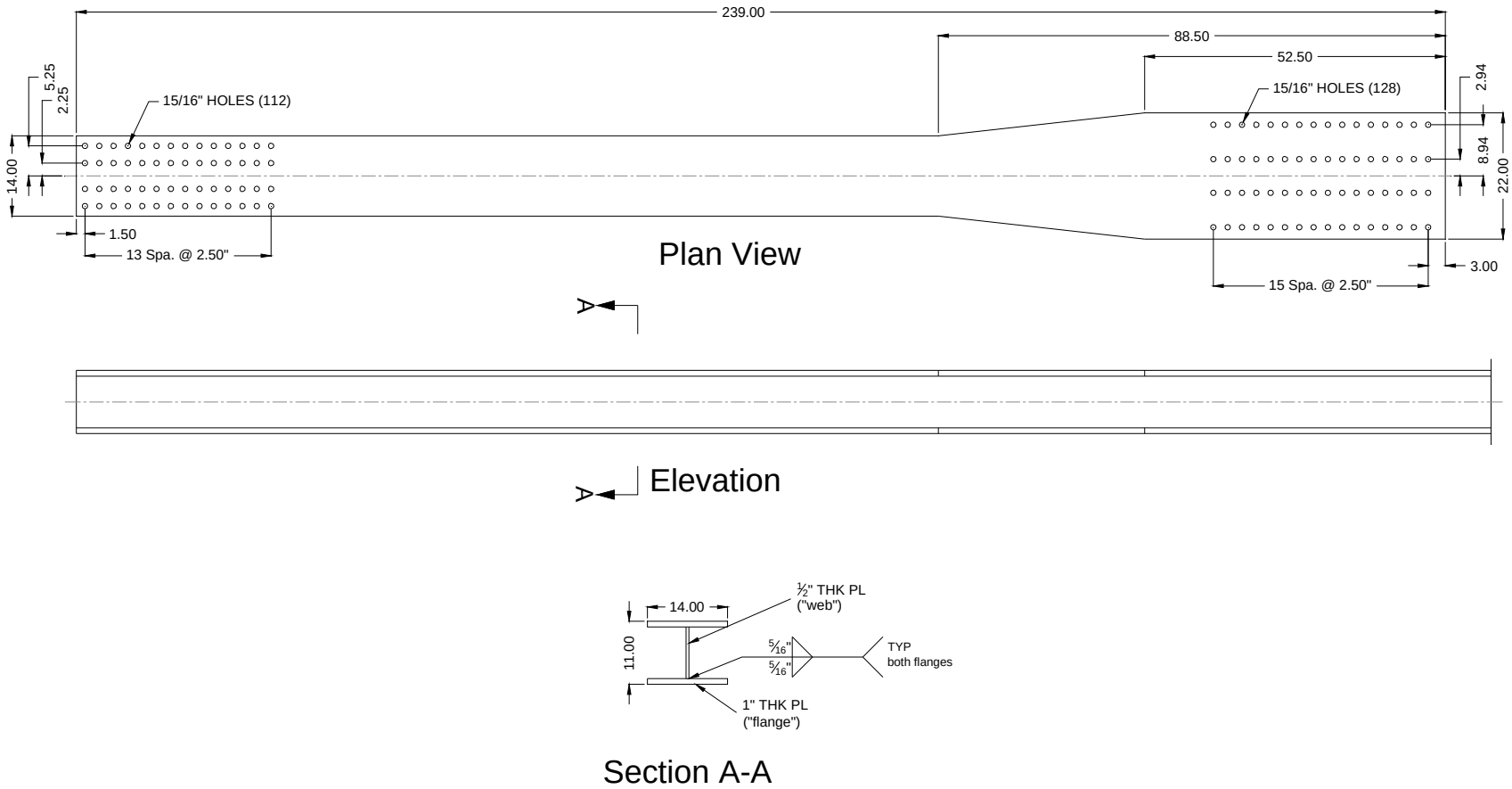

Figure B5. Tension diagonal dimensions.

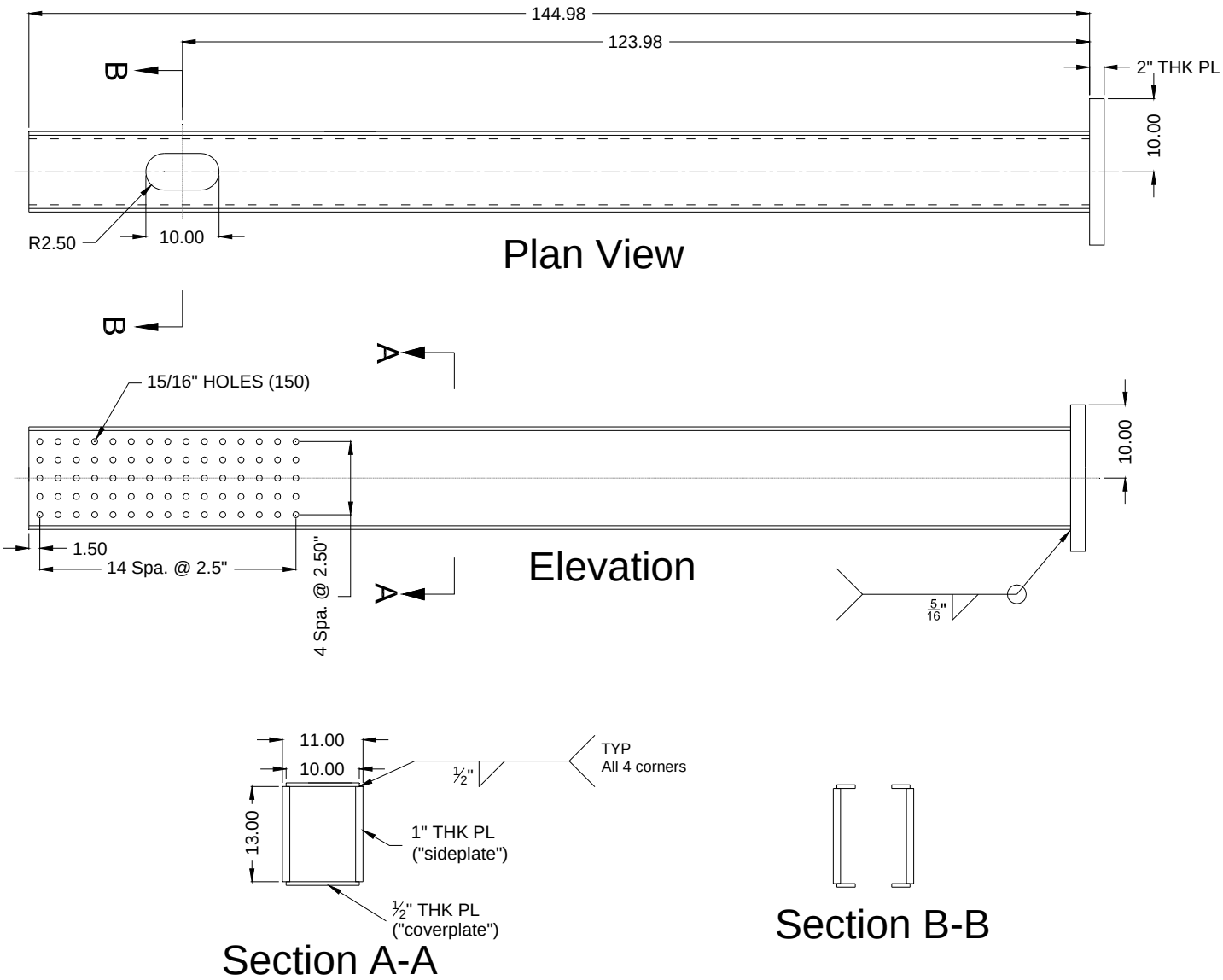

Figure B6. Compression diagonal dimensions.

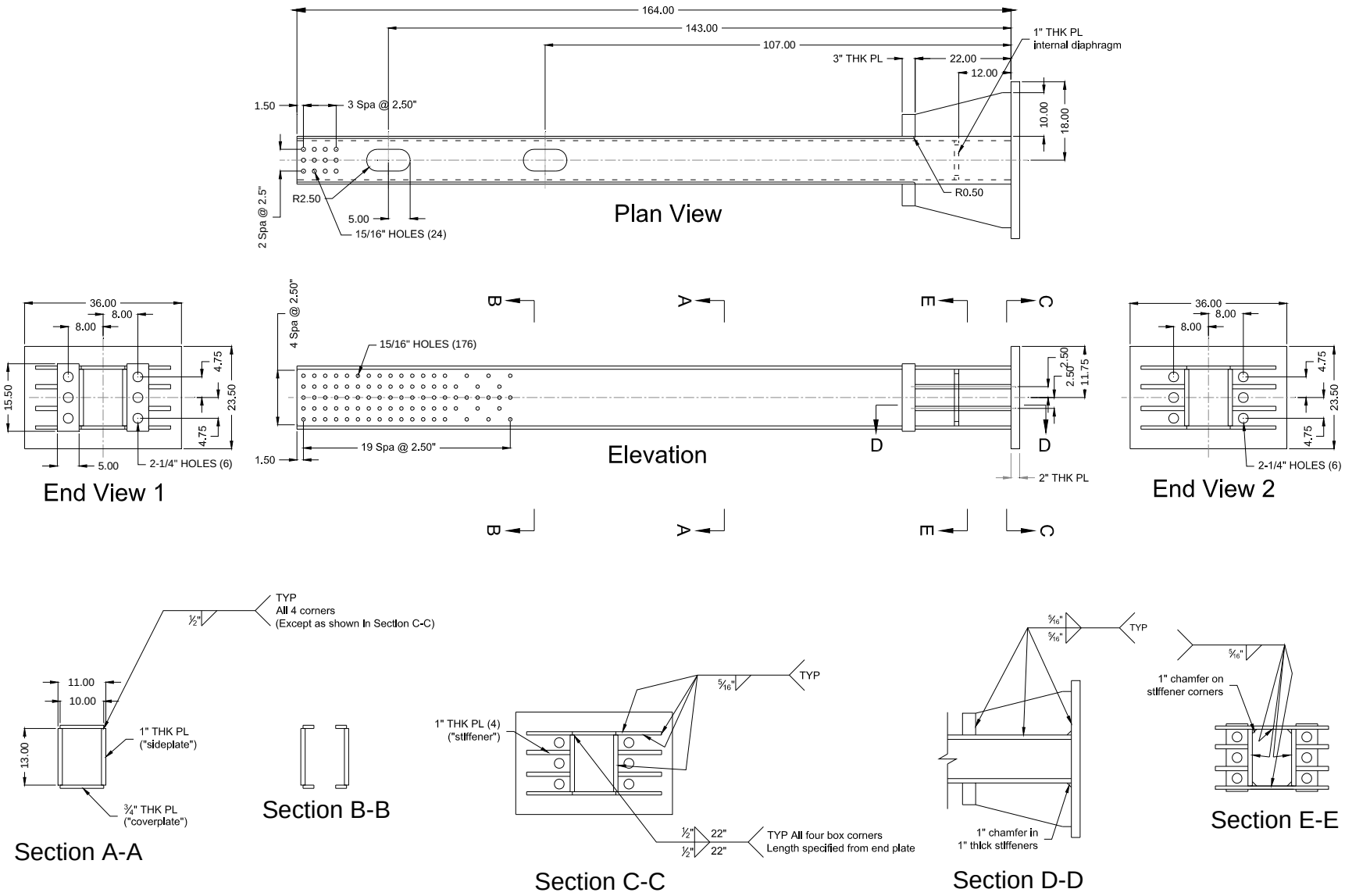

Figure B7. East chord dimensions.

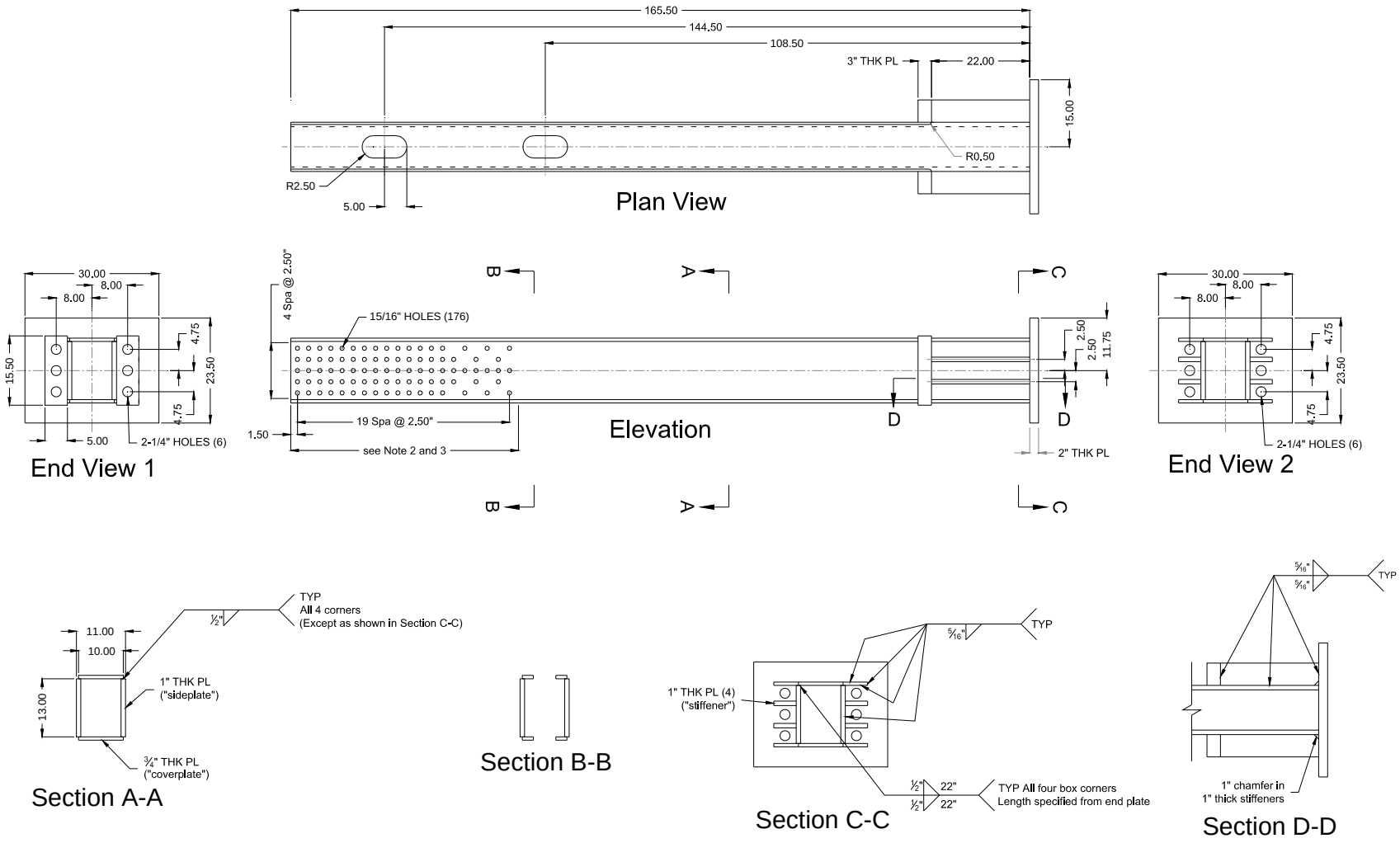

Figure B8. West chord dimensions.

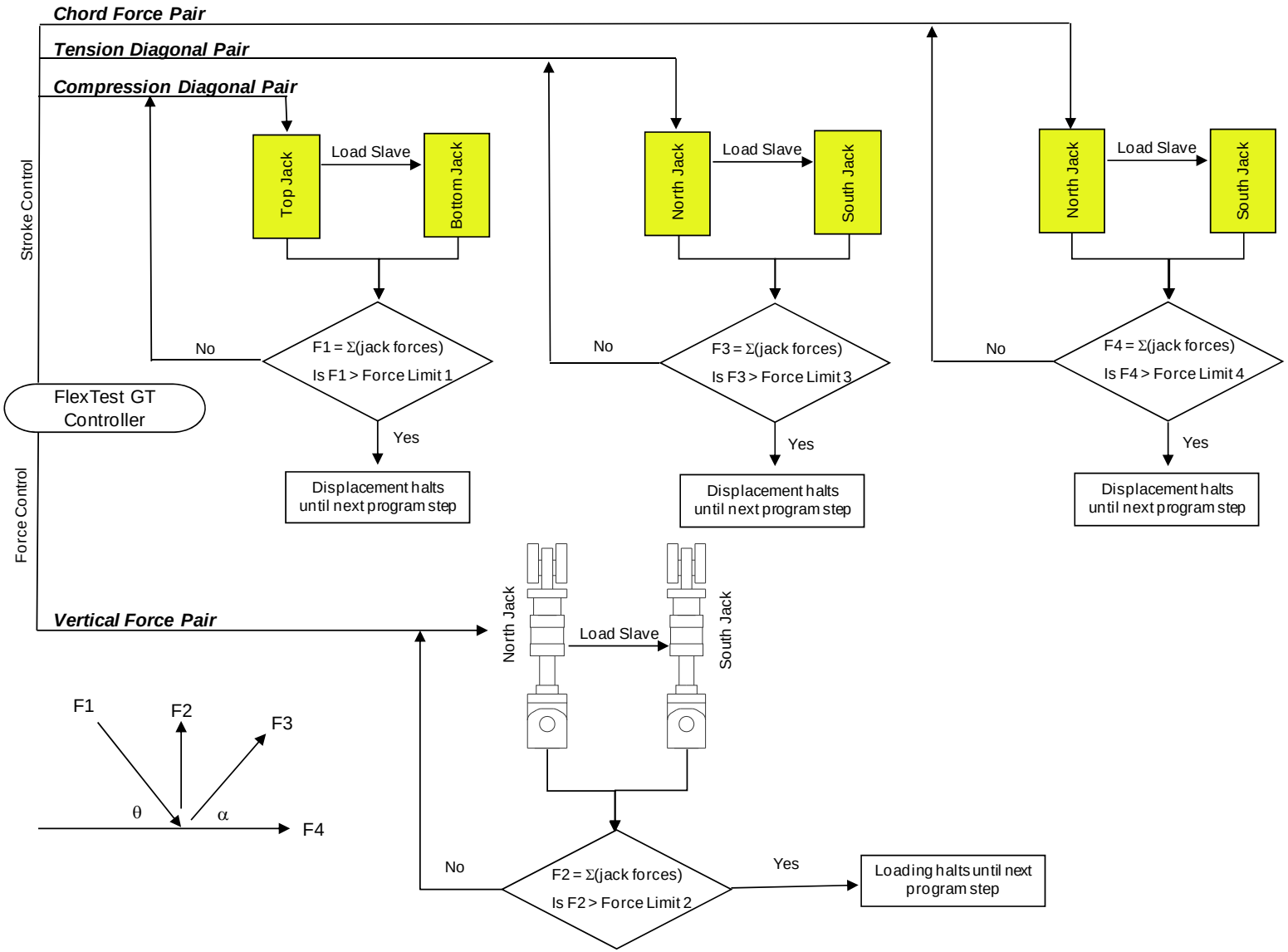

Figure B9. Flowchart of actuator loading program.