SHRP-C-345

Synthesis of Current and Projected Concrete Highway Technology

David Whiting, Alan Todres, Mohamad Nagi
Construction Technology Laboratories, Inc.
5420 Old Orchard Road
Skokie, IL 60077

Thomas Yu, David Peshkin, Michael Darter
ERES Consultants, Inc.
8 Dunlap Court
Savoy, IL 61874

Jens Holm, Mette Andersen, Mette Geiker
G.M. Idorn Consult A/S
Blokken 44
DK-3460 Birkerod, Denmark

Strategic Highway Research Program
National Research Council
Washington, DC 1993

SHRP-C-345
ISBN 0-309-05267-X
SHRP-89-C-206

Program Manager: *Don M. Harriott*
Project Manager: *Inam Jawed*
Program Area Secretary: *Carina Hreib*
Copy Editor: *Katharyn Bine Brosseau*

August 1993

key words:

admixtures
aggregates
fibers
portland cement concrete
curing of
finishing of
mixing of
overlays
placement of
recycling of
pavement
quality control
nondestructive testing

Strategic Highway Research Program
2101 Constitution Avenue N.W.
Washington, DC 20418

(202) 334-3774

2M/NAP/893

Acknowledgments

The research described herein was supported by the Strategic Highway Research Program (SHRP). SHRP is a unit of the National Research Council that was authorized by Section 128 of the Surface Transportation and Uniform Relocation Assistance Act of 1987.

Contents

List of Figures

List of Tables

Foreword

The goal of the concrete research of the Strategic Highway Research Program (SHRP) is to develop the knowledge, materials and methodology to produce and use concrete that will last longer in highway applications. Consequently, the SHRP projects were designed to address factors considered to be critically important to increasing the durability of concrete. Significant changes have occurred in concrete technology during the past few years. These changes have affected highway concrete, but the impact is probably not fully grasped. Highway engineers need to understand the effects of recent technological developments.

Project C-206, Optimization of Highway Concrete Technology, was designed to evaluate and synthesize the results of all SHRP concrete research activities, as well as recent developments in concrete technology elsewhere, into an implementation and training package for the use of highway engineers in their construction and maintenance activities.

The first task of this project dealt with a critical evaluation of current concrete technology and practice with specific reference to its application to highway concrete. This synthesis is a part of that assessment. It was prepared by Construction Technology Laboratories, Inc. with assistance from ERES Consulting Engineers and G.M. Idorn Consultants from Denmark. The last provided input on European experience in highway concrete technology and practice.

This synthesis describes trends anticipated in highway concrete construction, and contains some basic information on highway concrete technology with an emphasis on materials which the highway engineer will find helpful.

Inam Jawed
Project Manager

Abstract

This synthesis summarizes the results of an extensive search and review of available literature in the field of concrete materials, construction practices, and major application areas as applied to highway construction technology. The synthesis covers current and projected developments in materials systems, including cements, aggregates, admixtures, fibers, and sealers. General topic areas in the fields of concrete production and highway construction covered by this synthesis include mix proportioning, batching and transport, placement, finishing, and curing.

The synthesis includes information on specific applications areas in the highway industry. These applications focus on repair and reconstruction and include full-depth repairs, slab replacement, partial-depth repairs, overlays, and recycling. Quality control of concrete, including traditional approaches as well as new test methods and quality assurance schemes, is also discussed in detail.

The appendix describes the history of and new developments in concrete pavement construction on the European continent.

Executive Summary

The performance of portland cement concrete (PCC) pavement and structures is dependent on the design of the structure; the composition and quality of concrete materials; the care with which the concrete pavement is placed, consolidated, and finished; and the proper curing of the pavement. Because many of the earlier generation of highway engineers with great practical knowledge and experience in these areas have retired, there is a need for rapid education of the next generation in many aspects of concrete materials technology that are important to the production of quality concrete highways and structures. Although design aspects are covered in detail in most modern university curricula, materials properties and performance are often overlooked and left to "on-the-job" training. The objective of this synthesis is to afford the new engineer with a primer covering many aspects of portland cement concrete, its constituent materials, and their applications to important areas of concrete repair and rehabilitation.

Materials

Cements

Cements meeting ASTM C 150 (AASHTO M 85) are still the most widely used binder materials in PCC. Types I and II cement are most widely available and can be obtained in low-alkali versions when alkali-aggregate reactivity is a concern. The chemical composition and physical characteristics of cement can affect many important performance parameters, including placeability, strength gain, drying shrinkage, permeability, resistance to sulfates, and corrosion of reinforcing steel. Although tests are carried out on the finished cement in an attempt to control its production, the relationship between cement and concrete performance is still not wholly quantified. This is especially true when admixtures are used, making the preparation of trial batches an important prerequisite in starting up any new concrete project. The performance of admixtures is known to be influenced by the aluminate and alkali contents of the cement, its fineness, and the amount and type of sulfate compounds added to regulate set.

Cements other than Types I and II are also available, though utilized to a much smaller extent. Cement can be blended with mineral admixtures to produce portland pozzolan or portland blast-furnace slag cements. The use of these materials can reduce mix water requirements, improve workability, decrease permeability, inhibit alkali-aggregate reaction, and reduce heat generated in large sections or in hot weather. In the United States, however, concrete producers prefer to add these pozzolans at the batch plant in order to maintain control over the percentage of the material added to, or used as replacement for, the cement. This separate addition also allows for an increased economic advantage, as pozzolanic materials are generally less expensive than portland cement.

Cements to be used for more specialized purposes are also available. These include expansive cement (generally available as Type K cement or "shrinkage-compensating cement"), which contains hydraulic cement compounds that expand during hydration and can thus compensate for the volume shrinkage generally associated with portland cement. Expansive cement has been used with apparent success in both highway and airfield construction, although, as previously noted, to a very small extent.

Special cements also include those capable of very rapid strength gain. When placed and cured under ambient conditions, strengths of ordinary portland cement typically are not adequate for structural purposes within the first 24 hours. Cements such as high-alumina cements, magnesium-phosphate cements, regulated-set cements, gypsum-based cements, and proprietary products such as "Pyrament" and "Rapid-Set" cements are available and have been used in a variety of applications where it is necessary to open a pavement or structure within a very short period of time. More research and testing are needed on these cements, however—especially as regards the influence of early-age service on long-term durability and performance.

Aggregates

Often thought to be the "inert filler" in a concrete mixture, aggregates compose 70–80% of the volume of a typical concrete mix and are an important component of the overall material. Properties such as size, gradation, and shape of aggregates have an important influence on water demand, workability, strength, and durability of concrete. Gradation is one of the most important aggregate characteristics affecting its performance. Too many fines, or a shortage of material on one or more sieve sizes, can lead to a poor distribution, requiring excess water for placement, which may result in bleeding and segregation of the mix. By aggregate beneficiation, or by blending two or more separate gradings of aggregate, some of these deficiencies may be overcome. Tables developed by the Strategic Highway Research Program may aid in obtaining an optimal blend of aggregates, resulting in minimum void content and maximum workability.

Aggregates also contribute to a large extent to abrasion and skid resistance of concrete surfaces. The latter is especially important for pavement applications, and aggregates that consistently provide good skid resistance are preferred.

There is an increasing shortage, however, of high-quality, durable aggregates. This can be attributed to excessively stringent acceptance requirements, zoning restrictions on aggregate production operations, pollution control regulations, and shipping expense. Our aggregate resources can be conserved and extended through the use of marginal aggregates that still meet the desired performance requirements, beneficiation of low-quality aggregates, adjustment of specifications (so as to emphasize performance rather than prescription), use of waste materials, and production of aggregates from recycled concrete. Such materials as slags, tailings, and even municipal waste are under study as possible alternate sources of aggregate. Even with traditional naturally occurring aggregates, problems such as "d-cracking" and alkali-aggregate reactivity remain serious concerns, leading to a need for new tests designed to detect sources susceptible to these processes. When alternate sources cannot be located, methods for utilization of susceptible aggregates are being developed. These include the use of pozzolans and chemical inhibitors for avoidance of alkali-aggregate reactivity, and adjustment of maximum size and beneficiation of aggregates susceptible to d-cracking.

Admixtures

Admixtures are defined as any substances other than water, cement, aggregates, or fibers that are added to a concrete batch immediately before or during mixing. Admixtures can be used to accelerate or retard setting time, to reduce water content and improve strength, to increase slump, or to reduce cement content. Admixtures can enhance finishibility and make concrete easier to place under difficult conditions. Admixtures can increase resistance to freezing and thawing, inhibit alkali-aggregate reactivity, improve resistance to sulfates, increase resistance of reinforcing steel to corrosion, reduce heat generated during curing, and make possible the placement of concrete under very hot or cold conditions.

Chemical admixtures are widely used and may be present in more than 80% of the concrete placed today. If air-entraining agents are included in the total, it is likely that almost 100% of concrete in this country contains one or more admixtures. Air-entraining agents impart a system of tiny microscopic bubbles to the concrete, relieving pressures generated upon freezing. The amount and stability of the entrained air system is a function of the fineness and alkali content of the cement, the concrete mix design, and the presence of other types of admixtures in the mix. Other types of chemical admixtures include accelerators, retarders, water reducers, and superplasticizers (or high-range water reducers).

Mineral admixtures, though slow to be accepted by the highway industry, are now being increasingly used to meet energy and waste disposal requirements. The most common mineral admixtures are byproduct substances such as fly ash and ground granulated blast-

furnace slag (GGBFS). Fly ash can be and is used extensively as a partial replacement for cement in levels generally up to 25% of the cement content of the mix. In addition to its economic benefits, a high-quality fly ash can improve concrete workability, reduce bleeding, reduce heat generation and permeability, and contribute to long-term strength gain. GGBFS can be used at even higher replacement levels and offers similar benefits. Silica fume (SF), a third pozzolanic material, is being used increasingly in concrete, primarily for the production of very-high-strength (more than 10,000 psi) and very-low-permeability concretes.

Concrete Production

Even the best materials will fail if combined into a concrete mixture in an improper manner, or if not correctly batched, mixed, and transported. Rational mix design procedures—which rely on proportioning of concrete to meet the demands of placeability, strength, and durability—offer the best means of achieving desired performance. Prescription mix designs, which rely on fixed amounts of cement and other materials for various "classes" of concrete, are not flexible enough to meet many of today's changing demands. The ACI 211 mix proportioning procedures are accepted on a widespread basis, and—except for various refinements having to do with more exact definitions of aggregate gradation and relative proportions of fine and coarse materials—should serve the industry well into the future. Alternate cementitious materials are finding increasing use and are included in recent proportioning procedures. Computer-aided mix design procedures and expert systems in this area are expected to become widely available in the years ahead.

Accuracy of batching and mixing is necessary for achieving consistent concrete properties. Cement and aggregates should be batched by weight, and water and admixtures should be batched by weight or volume. Procedures and equipment leading to improved consistency in production include individual batching, pneumatic gate control, oscillatory gates, belt conveyor discharge into the hoppers, and pressurized admixture dispensers. Maintaining the integrity of separate storage facilities for all fine powders used in the batch (for instance, cement and fly ash) is also important if serious errors are to be avoided. Future trends include the use of automated controls and materials selection programs that automatically discharge the proper amount of material for the requested concrete mix. Although central mixing facilities are preferred for increased uniformity on large jobs, truck mixing can be used successfully, providing care is taken in loading the truck and proper mixing procedures are followed.

Highway Pavement Construction

Although some pavements are still placed by using standard forming procedures, the majority of projects now follow slipform paving practice. Concrete is centrally mixed and delivered by dump truck. The auger distributors meter out a proper head of concrete across

the entire width of pavement. As the paving machine advances, a battery of vibrators enters the metered material and consolidates it. Oscillating extrusion finishers pass over the consolidated concrete and extrude it at the proper shape. The Clary screed and pan float then follow for final finishing. This highly automated process leads to smoother and more consistent pavement production.

Dowel bars at joints are placed either by using preassemblies or by machine. These automatic dowel bar inserters (DBIs), which have been introduced in recent years, eliminate the labor and effort required by conventional assemblies. Such automated methods have also been applied to tie bars and to continuously reinforced concrete pavements. Other improvements in the paving process include the use of zero-clearance pavers, which allow the paver to be confined to a single lane while traffic flows freely in adjacent lanes. Final magnesium finishers also improve the quality of the surface by automatically closing the surface immediately behind the pan. Computer control is entering the paving industry in pavers designed to automatically control alignment and profile.

In order to provide the required skid resistance and braking distances, pavements must be textured. Texturing can be carried out on either fresh or hardened concrete. Transverse tining using spring steel tines is normally carried out on freshly placed concrete. This can be combined with longitudinal artificial turf texturing on high-speed roads. The drag precedes the tining operation. Texturing of hardened concrete can be carried out on new pavements but is more typically applied to existing pavement as a rehabilitative procedure. Texturing of hardened concrete can be carried out by diamond grinding, grooving, sandblasting, or waterblasting. Sawed transverse grooving appears to offer the best performance.

The final step, the curing of concrete, includes maintaining sufficient internal moisture to allow the cement to hydrate so as to reach its intended strength, as well as protecting concrete from either overheating or freezing. White pigmented curing compound is the best choice for long-line paving jobs, although other techniques—such as using soaked burlap or fogging—can be used on smaller placements such as bridge deck overlays and in pavement repairs. Thermal effects can be offset through careful control of concrete temperature at placement as well as consideration of the use of lower cement contents and cement replacement materials (such as fly ash) that lower the heat generated by concrete during curing. Under cold weather conditions, insulating blankets or heated concrete may be required to prevent freezing before the concrete has reached a safe strength (500 psi or more).

Applications of Concrete Highway Technology

As our nation's highway system ages, rehabilitation of existing highways becomes increasingly important. Maintenance of heavy traffic flow with minimal disruption is critical in many urban areas, creating a need for new early-opening technologies to allow

traffic back onto a repaired area in a short period of time. For badly deteriorated sections, total reconstruction may be required. To maintain traffic flow during reconstruction, so-called "Fast-Track" technology has been developed. Concretes can be placed, cured, and opened to traffic in as few as 6 hours. These mixtures utilize high-early strength cements, high cement contents, and low water-to-cement ratios (w/c's) to accelerate the setting process. Curing blankets can be used to maintain heat of hydration in the slabs and further contribute to early strength gain. This technology has been successfully applied to intersections, access roads, and airport runways, where it is difficult (or impossible) to detour traffic for only a very short period of time.

Where deterioration is confined to joints or other well-defined portions of the pavement, full-depth slab repair or replacement of selected individual slabs may be a viable option. In these cases, early opening may also be called for—especially on heavily trafficked roads on which only a few sections are being repaired and detours would lead to extreme congestion of the traffic flow.

Repairs with very early strength concrete mixes can be made in as few as 4 hours by using either accelerated versions of the such mixes or mixes using specialty cements capable of achieving complete cure in as few as 2 hours. The premium paid for such materials is often offset by the reduced traffic control costs as well as the reduced inconvenience to the driving public. By using similar rapid-set materials, partial-depth repairs can be carried out in even shorter periods of time.

When it is not necessary to remove the entire pavement, yet the riding surface is no longer serviceable, concrete overlays provide a cost-effective repair option. Conventional materials have been used most often in this application. However, early opening of overlays is being seriously considered in many cases, for both overlay of PCC and asphaltic concrete "whitetopping." Both bonded and unbonded overlays can be used. The bonded systems require more extensive pre-overlay repairs, but may be more applicable where clearances present a problem; they can also be completed more rapidly, especially where rapid substrate preparation methods such as cold-milling and shotblasting are employed.

The emphasis on the reuse of waste materials and the need to protect the environment has led to a renewed interest in concrete recycling. Concrete pavement can be recycled into subbases or bases, or used as aggregate in new concrete. Significant savings can be achieved through the use of recycled concrete, particularly in urban areas, where disposal costs may be high. By beneficiation of recycled aggregate, use of smaller top sizes, or blending with virgin natural aggregates, almost any pavement can be recycled into useable material. More work in this area is expected in the coming years.

Other Developments

This synthesis also addresses new developments in jobsite testing and quality control of concretes. These areas have been sorely neglected over the years, with only compressive and flexural strength normally emphasized as concrete control parameters. By using new technology, it is possible to measure water and cement content of concrete onsite, determine chloride content of materials, measure air-void systems in plastic concrete, and determine in-place density. Such methods as maturity monitoring and in-place strength testing can be used to monitor the rate of strength development by essentially nondestructive means. Voids and other defects in hardened concrete can be located by such methods as penetrating radar and impact-echo testing.

Finally, although implementation has so far been very slow, a gradual progression is occuring away from so-called "recipe" methods of specification and toward performance-related specifications coupled with application of statistical quality assurance (SQA) schemes. In SQA, acceptance plans that account for the variability in both materials and testing are developed. Agencies and contractors can reach agreement on the particular scheme to be used based on trade-offs between project cost and acceptable risks to both parties. The pay factors can be coupled to contractor performance, and bonuses may also be applied. The advantages of performance specifications and SQA are that they recognize that it is the final product that is important to the public, and that the variabilities that are inherent in materials and construction can be dealt with in a logical and equitable manner based on sound statistical principles rather than on rigid compliance to unrealistic prescriptions that are often idealized and cannot be implemented.

This synthesis concludes with an appendix summarizing developments in highway technology in European countries. During the past few years, we have come to realize (often by learning painful lessons) that we are indeed in a global economy and that we cannot isolate either our practices or our policies from other areas of the world. Although technical and social conditions are indeed different in other countries, there is much to be learned from the experiences of our counterparts abroad. This appendix should be of interest to all in the highway field.

1

Introduction

In recent years, significant developments have taken place in the availability of materials that can be utilized in the production of concrete. Concrete is no longer made from a simple mixture of cement, aggregate, and water. These days, concrete may include combinations of special cements, chemical admixtures, mineral admixtures, special aggregates, and fibers. Air-entraining agents are generally used to develop air-void systems appropriate for durability requirements. Chemical admixtures may be used to increase compressive strength, control rate of hardening, accelerate strength, improve workability, and improve durability. Mineral admixtures such as fly ash and silica fume have been used to produce higher-strength concretes and concretes with less permeability. New cements capable of very rapid strength gain and enhanced durability have recently been introduced. As a result, highway engineers are increasingly using these materials to enhance concrete properties for new construction, repair, and rehabilitation.

The continued development and evolution of the concrete technology discussed above will have an enormous impact on the concrete paving industry. Concrete pavements must be able to be rapidly constructed; be opened to traffic soon after construction; and be a reliable, long-lasting design alternative. With these advances, concrete will become a more attractive material for use not only in new design but also for rehabilitation. Because work on the Interstate and primary system has shifted from new construction to rehabilitation, the ability of concrete to be applied in the rehabilitation area is crucial. Specific areas of rehabilitation that would be positively influenced by the advancement of concrete technology include:

1) Reconstruction. For badly deteriorated pavement sections, total reconstruction is generally the preferred rehabilitation option. However, it is generally desirable to maintain traffic flow as much as possible in order to minimize disruptions, particularly in urban areas. New concrete technology is needed to

allow for rapid placement of the concrete and opening of roads to traffic soon after placement.

2) Full-depth repairs/slab replacements. If a concrete pavement is exhibiting relatively low amounts (less than 10–20%) of severe joint spalling or slab cracking, then the most cost-effective method of rehabilitation is full-depth repair or slab replacement. New technology has enabled these repairs to be placed and roads to be opened to traffic in as few as 3 or 4 hours, but even more rapid opening times are needed to enhance the attractiveness of this rehabilitation option.

3) Partial-depth repairs. Partial-depth concrete repairs are performed to address shallow joint spalls. Too often, however, these spalls are patched with asphaltic materials because they can be placed rapidly and because roads can be opened to traffic immediately. However, these materials commonly have limited durability and short service lives. Therefore, it is important that reliable and more durable cementitious materials and procedures for quick placement and speedy opening to traffic be developed.

4) Concrete overlays. Both bonded and unbonded concrete overlays are seeing more application as a rehabilitation alternative. Bonded concrete overlays are intended to provide additional pavement structure to concrete pavements with little structural deterioration; unbonded concrete overlays are constructed on deteriorated concrete pavements, but use a separation layer (bondbreaker) to prevent the underlying distressed pavement from reflecting through the new pavement. Concrete overlays are also an important method for rehabilitation of deteriorated bridge decks, where durable and impermeable materials are a necessity.

5) Concrete recycling. One of the most noticeable new developments in concrete pavement reconstruction is concrete recycling. Two of the factors that favor recycling over other alternatives are environmental advantages and savings in hauling time and costs. Recycling is particularly advantageous for reconstruction in urban areas, where disposal may be difficult and costly. Recent advances in pavement removal and processing equipment make it possible to produce recycled aggregates from deteriorated pavements. Recycled aggregate is now being used in many instances where normal aggregate would have been used in pavement reconstruction projects.

Concrete pavements have always held the promise of long service lives and low long-term life cycle cost. They have typically been synonymous with high-quality pavements. However, in the past, long service lives have not always been obtained. This can be attributed to a number of factors, including the use of nondurable aggregates (in Illinois, for example, d-cracking on concrete pavements has reduced the service life anywhere from 20 to 70%), poor designs (inadequate thickness, no consideration of drainage, etc.), disintegration at joints, and increased allowable traffic loads (many concrete pavements carry much more traffic than that for which they were originally designed). With the many

lessons learned from the construction of the Interstate system and with the advancements to be made in Strategic Highway Research Program (SHRP) and other concrete research studies, it is believed that longer service lives for concrete pavements can now be achieved.

Although service life has traditionally been tied to load-related factors, many engineers now feel that structural design considerations alone should not govern the requirements for concrete quality. Thus, it is felt that high-performance concretes and novel concrete processes need to be considered to improve the long-term performance of pavements and bridges. High-performance concretes will not only aid in optimizing the structural design of highways and bridges but will also improve the long-term performance of concrete against adverse exposure conditions and inherent material deficiencies. Selected high-performance concretes will also allow rapid repair and rehabilitation of pavement and bridge components.

Not only must these new concretes be capable of achieving rapid strengths and long-term durability, and be easily placeable in a wide variety of conditions, but agencies must also be assured that minor defects in concrete production or work quality will not compromise the ultimate potential of these new technologies. Toward this end, a comprehensive quality assurance system is needed, going beyond today's simple onsite measurements of slump and air content, and including rapid measurements of w/c, in-place density and air-void systems, early-age strength predictions, and nondestructive detection of potential durability problems.

In the summary of research plans published by SHRP, the primary goal of the proposed concrete research program was "to develop a sufficient increase in the understanding of the chemistry of cement hydration, of the properties of concrete, and of the performance of concrete in the highway environment, which will result in the means necessary to increase service life." The focus of this synthesis is to convey the current state of knowledge of properties and performance of concrete to highway engineers not directly involved in or even familiar with ongoing research activities. Highway engineers can then use this increased knowledge of new activities to implement improvements in materials utilization and application of concrete materials technologies to a variety of construction activities. It is hoped that this will aid those who are interested in overcoming much of the resistance that exists in many highway agencies toward applications of new materials and new ways of doing things.

2

Current and Projected Concrete Materials Technology

Cements

The properties of concrete depend on the quantities and qualities of its components. Because cement is the most active component of concrete and usually has the greatest unit cost, its selection and proper use are important in obtaining most economically the balance of properties desired for any particular concrete mixture.

Type I/II portland cements, which can provide adequate levels of strength and durability, are the most popular cements used by concrete producers. However, some applications require the use of other cements to provide higher levels of properties. The need for high-early strength cements in pavement repairs and the use of blended cements with aggregates susceptible to alkali-aggregate reactions are examples of such applications.

It is essential that highway engineers select the type of cement that will obtain the best performance from the concrete. This choice involves the correct knowledge of the relationship between cement and performance and, in particular, between type of cement and durability of concrete.

Summary of Current Technology

Portland Cement (ASTM Types)

ASTM C 150 defines portland cement as "a hydraulic cement (cement that not only hardens by reacting with water but also forms a water-resistant product) produced by pulverizing clinkers consisting essentially of hydraulic calcium silicates, usually containing one or more of the forms of calcium sulfate as an interground addition." Clinkers are nodules (diameters, 0.2–1.0 inch [5–25 mm]) of a sintered material that is produced when a raw mixture of predetermined composition is heated to high temperature. The low cost and widespread availability of the limestone, shales, and other naturally occurring materials make portland cement one of the lowest-cost materials widely used over the last century throughout the world. Concrete becomes one of the most versatile construction materials available in the world.

The manufacture and composition of portland cements, hydration processes, and chemical and physical properties have been repeatedly studied and researched, with innumerable reports and papers written on all aspects of these properties. A brief summary of the current technology is presented in the following sections of this report.

Types of Portland Cement. Different types of portland cement are manufactured to meet different physical and chemical requirements for specific purposes, such as durability and high-early strength. Eight types of cement are covered in ASTM C 150 and AASHTO M 85 (Standard spec. ASTM 1990; Standard spec. AASHTO 1986). These types and brief descriptions of their uses are listed in Table 2.1.

More than 92% of portland cement produced in the United States is Type I and II (or Type I/II); Type III accounts for about 3.5% of cement production (U.S. Dept. Int. 1989). Type IV cement is only available on special request, and Type V may also be difficult to obtain (less than 0.5% of production).

Although IA, IIA, and IIIA (air-entraining cements) are available as options, concrete producers prefer to use an air-entraining admixture during concrete manufacture, where they can get better control in obtaining the desired air content. However, these kinds of cements can be useful under conditions in which quality control is poor, particularly when no means of measuring the air content of fresh concrete is available (ACI Comm. 225R 1985; Nat. Mat. Ad. Board 1987).

If a given type of cement is not available, comparable results can frequently be obtained by using modifications of available types. High-early strength concrete, for example, can be made by using a higher content of Type I when Type III cement is not available (Nat. Mat. Ad. Board 1987), or by using admixtures such as chemical accelerators or high-range water reducers (HRWR). The availability of portland cements will be affected for years to come by energy and pollution requirements. In fact, the increased attention to pollution

abatement and energy conservation has already greatly influenced the cement industry, especially in the production of low-alkali cements. Using high-alkali raw materials in the manufacture of low-alkali cement requires bypass systems to avoid concentrating alkali in the clinkers, which consumes more energy (Energetics, Inc. 1988). It is estimated that 4% of energy used by the cement industry could be saved by relaxing alkali specifications. Limiting use of low-alkali cement to cases in which alkali-reactive aggregates are used could lead to significant improvement in energy efficiency (Energetics, Inc. 1988). Research being carried out by SHRP may allow for the use of higher-alkali cements while still avoiding the deleterious effects of alkali-silica reactivity (ASR).

Table 2.1. Portland cement types and their uses.

Cement type	Use
I[a/]	General purpose cement, when there are no extenuating conditions
II[b/]	Aids in providing moderate resistance to sulfate attack
III	When high-early strength is required
IV[c/]	When a low heat of hydration is desired (in massive structures)
V[d/]	When high sulfate resistance is required
IA[d/]	A type I cement containing an integral air-entraining agent
IIA[d/]	A type II cement containing an integral air-entraining agent
IIIA[d/]	A type III cement containing an integral air-entraining agent

a/ Cements that simultaneously meet requirements of Type I and Type II are also widely available.

b/ Type II low alkali (total alkali as $Na_2O < 0.6\%$) is often specified in regions where aggregates susceptible to alkali-silica reactivity are employed.

c/ Type IV cements are only available on special request.

d/ These cements are in limited production and not widely available.

Cement Composition. The composition of portland cements is what distinguishes one type of cement from another. ASTM C 150 and AASHTO M 85 present the standard chemical requirements for each type. The main compounds in portland cement are denoted by ASTM as tricalcium silicate (C_3S), dicalcium silicate (C_2S), tricalcium aluminate (C_3A), and tetracalcium aluminoferrite (C_4AF). However, it should be noted that these compositions would occur at a phase equilibrium of all components in the mix and do not reflect effects

of burn temperatures, quenching, oxygen availability, and other real-world kiln conditions. The actual components are often complex chemical crystalline and amorphous structures, denoted by cement chemists as "alite" (C_3S), "belite" (C_2S), and various forms of aluminates. The behavior of each type of cement depends on the content of these components. Characterization of these compounds, their hydration, and their influence on the behavior of cements are presented in full detail in many texts. Some of the most complete references dealing with the chemistry of cement include those written by Bogue (1955), Taylor (1964), and Lea (1970). Different analytical techniques such as x-ray diffraction and analytical electron microscopy are used by researchers in order to understand fully the reaction of cement with water (hydration process) and to improve its properties.

In simplest terms, results of these studies have shown that early hydration of cement is principally controlled by the amount and activity of C_3A, balanced by the amount and type of sulfate interground with the cement. C_3A hydrates very rapidly and will influence early bonding characteristics. Abnormal hydration of (C_3A) and poor control of this hydration by sulfate can lead to such problems as flash set, false set, slump loss, and cement-admixture incompatibility (Previte 1977; Whiting 1981; Meyer and Perenchio 1979).

Development of the internal structure of hydrated cement (referred to by many researchers as the microstructure) occurs after the concrete has set and continues for months (and even years) after placement. The microstructure of the cement hydrates will determine the mechanical behavior and durability of the concrete. In terms of cement composition, the C_3S and C_2S will have the primary influence on long term development of structure, although aluminates may contribute to formation of compounds such as ettringite (sulfoaluminate hydrate), which can cause expansive disruption of concrete. Cements high in C_3S (especially those that are finely ground) will hydrate more rapidly and lead to higher early strength. However, the hydration products formed will, in effect, make it more difficult for hydration to proceed at later ages, leading to an ultimate strength lower than desired in some cases. Cements high in C_2S will hydrate much more slowly, leading to a denser ultimate structure and a higher long-term strength. The relative ratio of C_3S to C_2S, and the overall fineness of cements, has been steadily increasing over the past few decades. Indeed, Pomeroy (1989) notes that early strengths achievable today in concrete could not have been achieved in the past except at very low water-to-cement ratios (w/c's), which would have rendered concretes unworkable in the absence of HRWR. This ability to achieve desired strengths at a higher workability (and hence a higher w/c) may account for many durability problems, as it is now established that higher w/c invariably leads to higher permeability in the concrete (Ruettgers, Vidal, and Wing 1935; Whiting, 1988).

One of the major aspects of cement chemistry that concern cement users is the influence of chemical admixtures on portland cement. Since the early 1960s most states have permitted or required the use of water-reducing and other admixtures in highway pavements and structures (Mielenz 1984). A wide variety of chemical admixtures has been introduced to the concrete industry over the last three decades, and engineers are increasingly concerned about the positive and negative effects of these admixtures on cement and concrete performance.

Considerable research dealing with admixtures has been conducted in the United States. Characterization of admixtures and their application will be covered later in this chapter. Here the effect of chemical admixtures on the performance of cement is briefly discussed. Air-entraining agents are widely used in the highway industry in North America, where concrete will be subjected to repeated freeze-thaw cycles. Air-entraining agents have no appreciable effect on the rate of hydration of cement or on the chemical composition of hydration products (Ramachandran and Feldman 1984). However, an increase in cement fineness or a decrease in cement alkali content generally increases the amount of admixture required for a given air content (ACI Comm. 225R 1985). Water reducers or retarders influence cement compounds and their hydration. Lignosulfonate-based admixtures affect the hydration of C_3A, which controls the setting and early hydration of cement. C_3S and C_4AF hydration is also influenced by water reducers (Ramachandran and Feldman 1984).

Test results presented by Polivka and Klein (1960) showed that alkali and C_3A contents influence the required admixtures to achieve the desired mix. It appears that set retarders, for example, are more effective with cement of low alkali and low C_3A content, and that water reducers seem to improve the compressive strength of concrete containing cements of low alkali content more than that of concrete containing cements of high alkali content.

Physical Properties of Portland Cements. ASTM C 150 and AASHTO M 85 have specified certain physical requirements for each type of cement. These properties include 1) fineness, 2) soundness, 3) consistency, 4) setting time, 5) compressive strength, 6) heat of hydration, 7) specific gravity, and 8) loss of ignition. Each one of these properties has an influence on the performance of cement in concrete. The fineness of the cement, for example, affects the rate of hydration. Greater fineness increases the surface available for hydration, causing greater early strength and more rapid generation of heat (the fineness of Type III is higher than that of Type I cement) (U.S. Dept. Trans. 1990).

ASTM C 150 and AASHTO M 85 specifications are similar except with regard to fineness of cement. AASHTO M 85 requires coarser cement, which will result in higher ultimate strengths and lower early-strength gain (Standard spec. ASTM 1990; Standard spec. AASHTO 1986; U.S. Dept. Trans. 1990). The Wagner Turbidimeter and the Blaine air permeability test for measuring cement fineness are both required by the American Society for Testing Materials (ASTM) and the American Association for State Highway Transportation Officials (AASHTO). Average Blaine fineness of modern cement ranges from 3,000 to 5,000 cm^2/g (300 to 500 m^2/kg).

Soundness, which is the ability of hardened cement paste to retain its volume after setting, can be characterized by measuring the expansion of mortar bars in an autoclave (ASTM C 191, AASHTO T 130) or by Gilmore tests (ASTM 266, AASHTO 154). The compressive strength of 2-inch (50-mm) mortar cubes after 7 days (as measured by ASTM C 109) should not be less than 2,800 psi (19.3 MPa) for Type I cement. Other physical properties included in both ASTM C 150 and AASHTO M 95 are specific gravity and false set, which is a significant loss of plasticity shortly after mixing. In many cases, false set can be eliminated by remixing concrete before it is cast.

Influence of Portland Cement on Concrete Properties. Effects of cement on the most important concrete properties are presented in Table 2.2.

Cement composition and fineness play a major role in controlling concrete properties. Fineness of cement affects the placeability, workability, and water content of a concrete mixture much like the amount of cement used in concrete does. However, the overall importance of cement fineness is only modest relative to the effect of the amount of cement used.

Table 2.2. Effects of cements on concrete properties.

Concrete property	Cement effects
Placeability	Cement amount, fineness, setting characteristics
Strength	Cement composition (C_3S, C_2S and C_3A), loss on ignition, fineness
Drying shrinkage, creep	SO_3 content, cement composition
Permeability	Cement composition, fineness
Resistance to sulfate	C_3A content
Alkali silica reactivity	Alkali content
Corrosion of embedded steel	Cement composition (esp. C_3A content)

Current portland cement types are distinguished by their content of cement compounds (C_3S, C_2S, C_3A, C_4AF). For instance, the early concrete strength at 3, 7, and 28 days will be high if the cement contains relatively large amounts of C_3S and C_3A; the early strength will be low if the cement contains a large portion of C_2S (Mehta 1986).

Cement composition affects the permeability of concrete by controlling the rate of hydration. However, the ultimate porosity and permeability are unaffected (ACI Comm. 225R 1985; Powers et al. 1954). The coarse cement tends to produce pastes with higher porosity than that produced by finer cement (Powers et al. 1954). Cement composition has only a minor effect on freeze-thaw resistance. Corrosion of embedded steel has been related to C_3A content (Verbeck 1968). The higher the C_3A. the more chloride can be tied into chloroaluminate complexes—and thereby be unavailable for catalysis of the corrosion process.

Storage of Cement. Portland cement is a moisture-sensitive material; if kept dry, it will retain its quality indefinitely. When stored in contact with damp air or moisture, portland cement will set more slowly and has less strength than portland cement that is kept dry. When storing bagged cement, a shaded area or warehouse is preferred. Cracks and openings in storehouses should be closed. When storing bagged cement outdoors, it should be stacked on pallets and covered with a waterproof covering.

Storage of bulk cement should be in a watertight bin or silo. Transportation should be in vehicles with watertight, properly sealed lids. Cement stored for long periods of time should be tested for strength and loss on ignition.

Cement Certification. The current trend in state transportation departments is to accept certification by the cement producer that the cement complies with specifications. The cement producer has a variety of information available from production records and quality control records that may permit certification of conformance without much, if any, additional testing of the product as it is shipped (ACI Comm. 225R 1985).

Blended Portland Cements

Blended cement, as defined in ASTM C 595, is a mixture of portland cement and blast-furnace slag (BFS) or a "mixture of portland cement and a pozzolan (most commonly fly ash)."

Blended cement types and blended ratios are presented in Table 2.3.

Table 2.3. Blended cement types and blended ratios.

Type	Blended ingredients
IP	15–40% by weight of pozzolan (fly ash)
I(PM)	0–15% by weight of pozzolan (fly ash) (modified)
P	15–40% by weight of pozzolan (fly ash)
IS	25–70% by weight of blast-furnace slag
I(SM)	0–25% by weight of blast-furnace slag (modified)
S	70–100% by weight of blast-furnace slag

The use of blended cements in concrete reduces mixing water and bleeding, improves finishability and workability, enhances sulfate resistance, inhibits the alkali-aggregate reaction, and lessens heat evolution during hydration, thus moderating the chances for thermal cracking on cooling. Blended cements are not popular in the United States, composing only 0.7% of the total cement shipped from plants (1988) (U.S. Dept. Int. 1989). The reason for this is that most engineers and concrete producers in the United States prefer using fly ash, GGBFS, and silica fume (SF) as mineral admixtures at the batch plants.

There are several advantages to using mineral admixtures added at the batch plant (Popoff 1991; Massazza 1987).

- Mineral admixture replacement levels can be modified on a day-to-day and job-to-job basis to suit project specifications and needs.
- Cost can be decreased substantially while performance is increased (taking into consideration the fact that the price of blended cement is at least 10% higher than that of Type I/II cement [U.S. Dept Int. 1989]).
- GGBFS can be ground to its optimum fineness.
- Concrete producers can provide specialty concretes in the concrete product markets.

At the same time, several precautions must be considered when mineral admixtures are added at the batch plant.

- Separate silos are required to store the different hydraulic materials (cements, pozzolans, slags). This might slightly increase the initial capital cost of the plant.
- There is a need to monitor variability in the properties of the cementitious materials, often enough to enable operators to adjust mixtures or obtain alternate materials if problems arise.
- Possibilities of cross-contamination or batching errors are increased as the number of materials that must be stocked and controlled is increased.

The current technology of using mineral admixtures in concrete will be covered later in this chapter.

Modified Portland Cement (Expansive Cement)

Expansive cement, as well as expansive components, is a cement containing hydraulic calcium silicates (such as those characteristic of portland cement) that, upon being mixed with water, forms a paste that—during the early hydrating period occurring after

setting—increases in volume significantly more than does portland cement paste. Expansive cement is used to compensate for volume decrease due to shrinkage and to induce tensile stress in reinforcement.

An expansive cement concrete used to minimize cracking caused by drying shrinkage in concrete slabs, pavements, and structures is termed *shrinkage-compensating concrete.*

Self-stressing concrete is another expansive cement concrete in which the expansion, if restrained, will induce a compressive stress high enough to result in a significant residual compression in the concrete after drying shrinkage has occurred.

Types of Expansive Cements. Three kinds of expansive cements are defined in ASTM C 845.

- Type K: Contains anhydrous calcium aluminate
- Type M: Contains calcium aluminate and calcium sulfate
- Type S: Contains tricalcium aluminate and calcium sulfate

Only Type K is used in any significant amount in the United States.

Concrete placed in an environment where it begins to dry and lose moisture will begin to shrink. The amount of drying shrinkage that occurs in concrete depends on the characteristics of the materials, mixture proportions, and placing methods. When pavements or other structural members are restrained by subgrade friction, reinforcement, or other portions of the structure, drying shrinkage will induce tensile stresses. These drying shrinkage stresses usually exceed the concrete tensile strengths, causing cracking. The advantage of using expansive cements is to induce stresses large enough to compensate for drying shrinkage stresses and minimize cracking (ACI Comm. 223 1983; Hoff et al. 1977).

Physical and mechanical properties of shrinkage compensating concrete are similar to those of portland cement concrete (PCC). Tensile, flexural, and compressive strengths are comparable to those in PCC. Air-entraining admixtures are as effective with shrinkage-compensating concrete as with portland cement in improving freeze-thaw durability.

Some water-reducing admixtures may be incompatible with expansive cement. Type A water-reducing admixture, for example, may increase the slump loss of shrinkage-compensating concrete (Call 1979). Fly ash and other pozzolans may affect expansion and may also influence strength development and other physical properties.

Structural design considerations and mix proportioning and construction procedures are available in ACI 223-83 (ACI Comm. 223 1983). This report contains several examples of using expansive cements in pavements.

A Type K expansive cement concrete continuously reinforced pavement was placed in Ohio. Two bridge decks were also built in Ohio in 1966, one with PCC and the other with expansive cement concrete. Both were opened to traffic in 1968. A 1975 inspection of

both decks indicated that the bridge deck built with expansive cement was in very good condition (only one crack had appeared), whereas the conventional deck had developed many cracks. The largest paving job to date using expansive cement is at the Love Field Airport at Dallas-Fort Worth, where more than 150,000 yd^3 (115,000 m^3) of shrinkage-compensating cement concrete was used in taxiways (Mindess and Young 1981).

In Japan, admixtures containing expansive compounds are used instead of expansive cements. Tsuji and Miyake (1988) described using expansive admixtures in building chemically prestressed precast concrete box culverts. Bending characteristics of chemically prestressed concrete box culverts were identical to those of reinforced concrete units of greater thickness (Tsuji and Miyake 1988).

Expansive compounds are also available in the United States. They can be added to the mix in a way similar to how fly ash is added to concrete mixes.

The cost of expansive cement is higher than that of Type I/II cement; however, this additional cost can be justified by the savings in construction costs. Larger joint spacings will be considered in shrinkage-compensating concrete pavements, which leads to less jointing materials and joint preparation. The economic justification for using expansive cement concrete must be developed by costing the entire concreting operation and not just the materials (Hoff et al. 1977).

Rapid Set Cements

High-alumina Cements. High-alumina cements (HACs), also known as calcium-aluminate cements or aluminous cements, are hydraulic cements obtained by pulverizing a solidified melt or clinker that consists predominantly of hydraulic calcium aluminates formed from proportioned mixtures of aluminous and calcareous material. (No standard specifications for HAC exist in the United States.)

Some of the purposes for which HAC concretes may be specified include the following:

- Cold weather work
- Resistance to high temperature
- Rapid hardening
- Resistance to mild acid and alkalies
- Resistance to sulfates, seawater, and pure water (Mehta 1986; Massazza 1987; Fishwick 1982)

HAC concretes are not rapid setting; they are, however, rapid hardening—that is, they will develop as much strength in 24 hours as PCC will achieve in 28 days. Long-term properties of HAC concrete were studied in England by Collins and Gutt (1988). Concrete specimens were cured for 20 years in water at different temperatures. This study showed that curing conditions (temperature, humidity) have an important effect on strength development of HAC. Another comprehensive research study conducted in South Africa

(Van Aardt, Nemeth, and Visser 1982) indicated that HAC behaved normally and that concrete made with it was of very high quantity.

A major disadvantage of HAC is the conversion phenomenon, which causes a reduction of HAC concrete strength with time. This phenomenon occurs when the initial hydration products (mono- and dicalcium aluminates) are exposed to moist conditions. A more porous, lower-strength cubic tricalcium aluminate is then formed. The process can occur within a few months at temperatures slightly over 100° F (40° C). However, this will not be a major problem for repair or structural applications if the mixture is designed on the basis of converted rather than unconverted strength (Fishwick 1982). The w/c should generally not exceed 0.4. It is also not advisable to mix HAC with portland cement because the mixture has poor strength and durability (Mindess and Young 1981). Finally, the rapid-strength-gain characteristics of HAC make it an alternative material for patching and repair, particularly at low temperatures.

Magnesium-phosphate Cement. Use of magnesium-phosphate cement (MPC) as a repair material for concrete in the United States started in the early 1970s. The early technology for using this material was to mix two components—a phosphate liquid and magnesia/filler powder—before its application. This technique was used in the 1950s for building moldable articles; it has also been used to repair concrete structures.

Another development in this field was the introduction of a single-component MPC patching product in a powder form, which required only the addition of gauging water before being used (Popoff 1991). This material is available in the United States under different brand names (such as Set-45, Neco-Crete, and Horn 240).

A laboratory and field evaluation program for rapid-set materials used for repairing concrete pavements, including MPC, was conducted at the Center for Transportation Research (CTR) at the University of Texas at Austin. In a comprehensive report on this program (Smith, Fowler, and Meyer 1984) and in a technical paper (Macadam et al. 1984), researchers described comparison analysis performed for different rapid-set materials using standard tests (compressive strength, drying shrinkage, freeze-thaw durability, etc.) at temperatures of 40, 70, and 110° F (4, 22, and 43° C). MPCs (Set-45, Neco-Crete, Horn 240, and Hot Set-45) achieved the highest 3-hour compressive strengths at all temperatures considered.

In a 40° F (4° C) environment, the compressive strength of magnesia phosphates will exceed 3,500 psi (24.1 MPa) in 3 hours if the mix ingredients are warmed to 72° F (22° C). Set-45 and Neco-Crete achieved initial set in 3 minutes at 110° F (43° C), whereas Set-45 initial set time in hot weather was 9 minutes. Freeze-thaw durability tests showed that MPC failed at fewer than 100 freeze-thaw cycles.

Fiber reinforcements (steel and polypropylene fibers) were also studied (Temple, Meyer, and Fowler 1984). Test results showed that the addition of fibers can improve some properties of these rapid-set materials, such as flexural strength, drying shrinkage, and freeze-thaw durability.

MPC was introduced to the United Kingdom in the early 1980s. Test data presented by El-Jazairi (1982) showed the satisfactory results of using one such product (FEB Set-45) in several field applications. Acceptable results were obtained by conducting freeze-thaw tests (ASTM C 666) on specimens made of MPC (BEB Set-45). Relative dynamic modulus was 92% after 144 cycles and 80% after 300 freeze-thaw cycles.

Popovics, Rajendran, and Penko (1987) indicated that MPC can gain very high strength (1,000 psi [6.9 MPa]) within an hour. However, durability characteristics were not discussed in this paper.

Effects of cold weather on repair materials were described in a report prepared for the New Jersey Department of Transportation (DOT). The authors presented the results of a laboratory investigation of five repair materials (Kudlapur et al. 1987). In this report and in another paper (Kudlapur et al. 1989), the authors indicated that water-based magnesium phosphate performs well generally but that freeze-thaw durability was a concern. They recommended that the subfreezing application of this material be for short-term patching (5 years or less) or when the patch is protected from water penetration (e.g., by an overlay).

Calcium Sulfate. Many available patching cements are basically composed of calcium sulfate (Duracal, Mari-crete, etc), with portland cement in varying amounts, as well as small amounts of chloride and sulfates. These cements gain strength very rapidly and can be used in any temperature above freezing, but they have not in all cases been found to be very durable when exposed to moisture and freezing weather (Rapid-setting materials 1977). In the report cited above (Smith, Fowler, and Meyer 1984), the authors compared Duracal with other patching materials. Their test results showed that Duracal performed well at 70° F (21° C). Final set time was about 50 minutes, and compressive strength after 24 hours exceeded 3,500 psi (24 MPa). In a 110° F (43° C) environment, the Duracal initial set time was 19 minutes. Resistance to freeze-thaw cycles was fair, with failure after 170 cycles.

The manufacturer recommends that to use this material, 1) the temperature must be above 32° F (0° C); 2) the patch area must be moistened before it is placed, to minimize water withdrawal from the patching cement; and 3) the materials should be mixed until lump free, but for not more than 5 minutes. Calcium sulfates cost two to three times less than magnesium phosphates—e.g., Duracal mix costs about \$240/yd^3 (\$314/m^3), whereas Set-45 mix costs \$986/yd^3 (\$1,290/m^3) (Smith, Fowler, and Meyer 1984).

Type III Cement with Admixture. Adding an accelerator to Type III portland cement, which is high-early strength in itself, makes it an alternative to the other rapid-set cements. Temple et al. (1984) introduced a PCC called Class K concrete, which is basically Type III cement concrete with accelerators and air-entraining agents. In this study, five different accelerators were used—one calcium chloride based and four nonchloride types. The minimum initial set for this concrete at 75° F (24° C) was about 2 hours; whereas for the slower Type III control (no accelerator), initial set was about 5 1/2 hours. The 4-hour flexural strength was within a range of 150 to 200 psi (1–1.4 MPa) at 75° F (24° C), the 4-hour compressive strength was approximately 700 psi (4.8 MPa), and the average compressive strength at 24 hours was 4,000 psi (27.5 MPa).

The most impressive application of Type III cement is the development of Fast-Track concrete pavements. Fast-Track concrete is produced from a high-cement-factor mix incorporating a special Type III portland cement (1,300 psi [8.9 MPa] at 12 hours by ASTM C 109). The specification developed by the Iowa DOT recommended either 710 pounds of Type III cement or 640 pounds of Type III cement and 70 pounds/yd^3 of Class C fly ash (419 kg of Type III or 377 kg of Type III and 41 kg/m^3 of fly ash) (Knutson and Riley 1987). Higher cement contents were also used (Fast-Track II), where 822 pounds of special Type III cement per cubic yard were used (485 kg/m^3) and 300 psi (2.0 MPa) flexural strength was achieved after 6 hours (Grave et al. 1990). It should be noted that all other materials used in the mix (aggregates, sand, admixtures) are the same ones used in conventional concrete.

Further details about Fast-Track concrete technology (materials, mixing and construction procedures, and application) are presented in an American Concrete Pavement Association (ACPA) (1989) technical bulletin and in Chapter 5 of this synthesis.

New Developments

Modern microscopies and analytical equipment applied to portland cement have led to more knowledge of the structure and behavior of cement compounds. This knowledge has been applied to the control of cement manufacture and the prediction of properties of the finished cement. One example of such development is the use of an electrical technique as an alternative to conduction calorimetry to investigate the effect of commercially available admixtures in the early stages of cement hydration (McCarter and Gravis 1989).

McCarter and Gravin indicated that this method is more sensitive than conduction calorimetry techniques and can detect chemical activity that goes undetected in calorimetry work. This technique showed, for example, that some air-entraining plasticizers have a moderate retarding effect that is increased by increasing the admixture proportion.

A research program sponsored by the Federal Highway Administration (FHWA) on developing cement strength was conducted in Yugoslavia by Matkovich et al. (1990). Part of this program included an investigation aimed at regulating the setting time of belite cement containing C_3A and C_4AF. Findings in this respect would have considerable economic impact because less energy is required for the production of portland cement containing more belite and less alite.

Recycled concrete was recently used in Japan to produce a new cement by crushing PCC with a high cement content and intergrinding it with granulated BFS and gypsum (Hansen 1990). Similar techniques have been used in Europe by replacing the GGBFS with fly ash (Hansen 1990).

An interesting cement innovation that can be considered a breakthrough in the cement industry is the development of "macrodefect-free" (MDF) cement by scientists at Imperial Chemical Industries (ICI) in England. An essential feature of the MDF materials is the

incorporation of a fairly significant amount of water-soluble polymer(s) in a mix with the cement and a limited amount of water. High-shear mixing used with such a system produces a "cement dough." The crumbly MDF dough is squeezed between two rollers to remove the air and produce a dense, flexible plastic sheet that can be extruded into virtually any shape (Diamond 1985). ICI researchers have reported a 40,000-psi (276-MPa) compressive strength and a 20,000-psi (134-MPa) flexural strength, and the numbers can be doubled with some refinement in MDF processing (Weisburd 1988).

Current applications of such products include relatively flexible pipes and fittings, window and door frames, and even springs that can be made out of MDF cement. MDF cement might not have a direct application in pavements and highway structures, but its application may be extended by adding different kinds of fibers and fillers. These composite materials may eventually be used as an alternative to steel in steel bridges and for the manufacture of box culverts or other highway structural applications.

Other work has been done toward developing very-high-strength cementitious products by using SF. At the laboratories of Alaborg Portland in Denmark, a product called "densified system containing homogeneously arranged ultrafine particles" (DSP) was developed. This system is basically portland cement with a large dosage of microsilica added to it and an effective superplasticizer with enough dosage to ensure deflocculation of portland cement and microsilica (Diamond 1985). Fillers and fibers can be incorporated in this product; a very dense silicon carbide aggregate has also been used.

New developments in the cement industry that may have more direct application to pavements and highways include the production of new rapid-set cements. Regulated-set cement and Pyrament-blended cement were recently introduced to the U.S. market. Stratlingite-hydrogarnet (SHG) cement is currently being developed under the SHRP IDEA program (IDOO1). Because of the importance of these three types of cement, the properties of each as regards highway applications will be briefly presented.

Regulated-set Cement

This cement was patented and developed by the Portland Cement Association (PCA) in 1971. A modified clinker containing mainly alite (C_3S) and a calcium fluoroaluminate (CaF_2) is produced. A suitable portion of the fluoroaluminate clinker is then blended with ordinary portland cement clinker and calcium sulfate so that the final cement contains 20–25% calcium sulfate. The set of this cement can be regulated at 2–30 minutes by using a set retarder such as citric acid (Mehta 1986; Osborne and Smith 1974).

Data available from the manufacturer of regulated-set portland cement (RSCP) in the United States showed that the compressive strength of concrete made of 709 pounds (418 kg) of RSPC, 1,408 pounds (830 kg) of fine aggregate, 1,397 pounds (824 kg) of coarse aggregate, and 255 pounds (150 kg) of water yields approximately 1,000 psi (6.9 MPa) flexural strength 20 hours after casting. Initial and final setting times are 15 and 28 minutes, respectively.

The freeze-thaw durability of such concrete is very good. The durability factor of the mix described above was 99% at 300 cycles of freezing and thawing in water.

An evaluation study for RSPC performed by Iowa DOT (Jones 1988) showed that for a mix of 610 pounds (360 kg) of cement, the flexural strength of concrete made with RSPC exceeded 300 psi (2.1 MPa) at 4 hours after mixing. The durability factor was about 90%. The use of 10% replacement of cement with fly ash did not significantly reduce the strength gain of this cement.

Manufacture and application of regulated-set cement ("Jet" cement) has become widespread in Japan. Uchikawa and Kohno (1983) presented a comprehensive review of the production properties and applications of Jet cement in Japan. The final setting time of Jet cement is 15 minutes, compared to 190 minutes for ordinary portland cement (OPC), so a set retarder should be used for better handling of Jet cement concrete. Initial setting time of gravel concrete made with Jet cement incorporating 0.3% retarder is about 40 minutes, versus the 5 hours needed for OPC concrete. Flexural and tensile strength of Jet cement concrete at the age of 1 day are 590 and 360 psi (4.1 and 2.5 MPa), respectively.

Drying shrinkage and creep of Jet cement concrete tends to be less than that of concrete made with OPC. Test results of freezing and thawing for air-entrained Jet cement concrete are similar to those for OPC concrete. Application of Jet cement concrete in Japan includes repair of bridge piers, pavements, and expansion joints and reconstruction of pavement.

As an example of the advantages of using Jet cement in the reconstruction of pavement, a schedule of reconstruction of pavement on earth subbase using Jet cement concrete (cement at 675 lb/yd^3 [400 kg/m^3], w/c of 0.35) is shown in Figure 2.1 (Uchikawa and Kohno 1983).

Pyrament Cement

Pyrament-blended cement (PBC) is another rapid-setting cement currently marketed in the United States.

Data available from the producer indicate that the compressive strength of a concrete made of PBC can gain up to 2,000 psi (13.4 MPa) within 24 hours, and that a 28-day compressive strength could reach 12,000 psi (82.7 MPa). Flexural strength after 4 hours of mixing is about 500 psi (3.4 MPa).

A test program was conducted at the University of Texas at Austin to study various strength and durability characteristics of three different concrete mixtures containing PBC (Carrasquillo 1990). A cement content of 752 pounds (444 kg) and w/c's of 0.25, 0.27, and 0.29 were considered. No chemical or mineral admixtures were used.

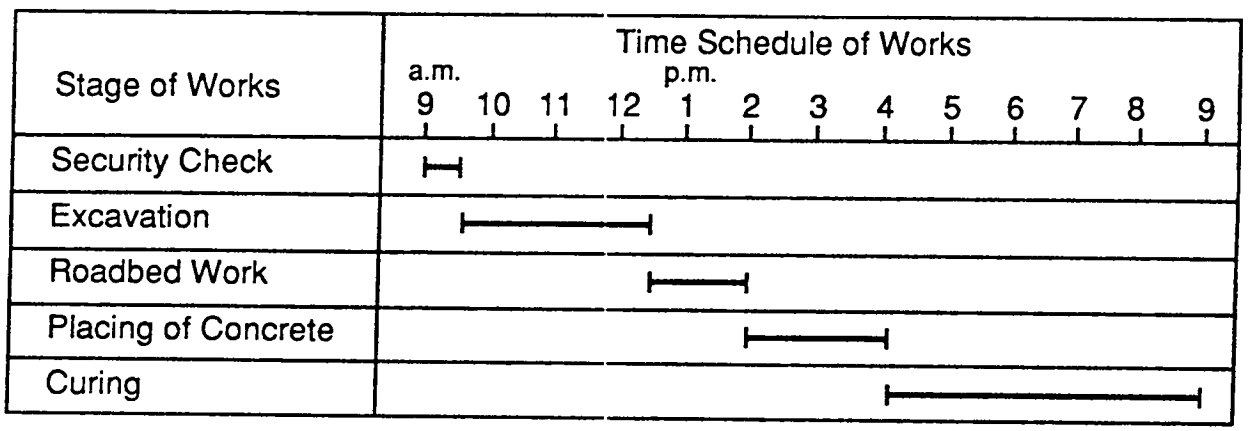

Figure 2.1. Schedule of repair works for paving concrete (Uchikawa and Kohno 1983).

Average modulus of rupture after 4 hours of mixing with a w/c of 0.25 was 365 psi (2.5 MPa); after 28 days, it was 1,280 psi (8.8 MPa). Freeze-thaw tests (ASTM C 666) started 21 days after casting showed that the relative dynamic modulus was 96% after 317 cycles. Permeability of PBC concrete was found to be similar to or lower than that of latex-modified concrete (LMC), and drying shrinkage was only a fraction of that of conventional concrete.

A mix of 610 lb/yd^3 of PBC (362 kg/m^3) was considered by Jones (1988) at Iowa DOT. He stated that this mix achieved significant flexural strength (300 psi [2.1 MPa]) and that it would be useful for a standard primary paving mixture. However, using 10% replacement of cement with fly ash reduced the flexural strength by about 180 psi at 12 hours. The durability factor was about 90% (ASTM C 666).

According to data sheets available from the producers, PBC has been used in several highway applications. A bridge joint repair in New York State was done within 12 hours by using PBC. A 25-by-60-foot (7.6-by-18.3-m) runway was reconstructed at Barkley Regional airport in Kentucky within 5 hours by using PBC in cold weather.

Stratlingite-hydrogarnet Glass Cements

Another fast-setting hydraulic cement was developed and patented by researchers at Corning Laboratories (MacDowell, Huang, and Chowdhury 1990). This is a new family of cement termed "stratlingite-hydrogarnet" (SHG) cements. These are calcium aluminosilicates lying in the compositional range of 12 to 26% SiO_2, 22 to 40% Al_2O_3, and 45 to 55% CaO. The lower silica hydrogarnets (C_3AH_6) are virtually flash setting, and the higher silica stratlingites (C_2ASH_8) are very slow setting; therefore, this research concentrated on composites lying between the two extremes. Those closer to ettringite had lower porosities and higher strength but slower setting times, whereas those close to hydrogarnet set in less than 30 minutes. Work done on mortar has indicated that strengths exceeding 8,000 psi could be reached in as few as 3 hours with some of the compositions. Bond strength and tensile strength were satisfactory; however, shrinkage was 30–50% greater than that for Type III cement.

Before these materials could be implemented, further work would need to be done on concrete mixtures, freeze-thaw resistance, workability, and possibly other physical properties.

Projected Future Trends

Production of general-purpose cement (Type I/II) in the coming years should continue at basically the same level. However, the availability of low-alkali cements will be affected in some states by pollution abatement and energy conservation regulations, and the use of low-alkali cement may be limited to areas in which alkali-reactive aggregates occur. Development of Fast-Track concrete and its increasing use will increase the demand for

Type III cement, forcing cement producers to increase the production and availability of such cement.

The need for early opening of repairs and pavement reconstruction will also bring more attention to other rapid-set cements currently being marketed in the United States. This will be increasingly true in high-traffic-volume areas, where downtime needs to be minimized. Expanded use of these cements could substantially reduce overall construction costs.

Aggregates

Aggregates generally occupy 70–80% of the volume of concrete and can therefore be expected to have an important influence on its properties. Aggregates are granular, usually inorganic, materials derived from natural rocks, crushed stone, or natural gravel and sand.

Natural mineral aggregates form the most important class of aggregates for making portland cement concrete. Approximately half of the total coarse aggregates consumed by the concrete industry in the United States consists of gravel. Most of the remainder is crushed rock, with some use of synthetic aggregates such as iron BFS (mostly used in the construction of concrete pavements). Natural silica sand predominates as fine aggregate, although some manufactured sand is also used. Even though aggregates are considered inert fillers they have a considerable influence on concrete properties. In addition to their role in determining cost and workability, aggregates also influence, to some extent, other properties of concrete such as strength, durability, and dimensional stability.

In order to obtain the desired concrete mix, engineers should consider various properties of aggregate available for use in concrete. Shape, size, texture, porosity, specific gravity, and—most importantly—gradation should be considered in the selection of aggregate.

Current Technology

Current Specifications

Aggregate specifications have been developed over the years. Current ASTM and AASHTO specifications cover most aspects of concrete aggregates regarding testing, properties, and the standard requirements for use in concrete. A summary of some important specifications related to pavement and highway constructions is presented below.

Classifications. Aggregates have been classified according to particle size and bulk density of source. Coarse aggregates are generally defined as particles larger than those retained on a No. 4 (4.75-mm) sieve, and fine aggregates are particles smaller than those retained on a No. 4 sieve.

Normal-weight, lightweight, and heavyweight are other classifications relating to aggregate density. Most aggregates used in concrete are natural normal-weight aggregates (derived from natural sources). Aggregates made of industrial byproducts such as BFS, called synthetic aggregates (Mehta 1986), are also used, but to a limited extent.

Grading. The particle size distribution of aggregates as determined by separation with standard sieves is known as gradation. Gradation is the most important concrete aggregate property, and it has been extensively discussed in the technical literature during the past 140 years (Price 1978).

Gradation plays an important role in controlling workability and cost of concrete. Concrete mixes that contain very coarse sand, for example, are harsh and unworkable and become difficult to finish, whereas mixes with very fine sand are uneconomical because they require more cement and water to achieve good workability (Mindess and Young 1981).

As defined in ASTM C 125, nominal maximum size is the smallest-size opening through which the entire sample is permitted to pass (though usually 5% of the sample weight may be retained on this sieve). Concrete properties are influenced by this maximum aggregate size: the higher the maximum aggregate size, the lower the paste requirement for the mix. An increase in maximum aggregate size reduces the w/c, thereby increasing the concrete strength. However, in mixes containing high amounts of cement, the larger size aggregate is accompanied by a reduction in bond area, which leads to lower strength.

ACPA recommends size 57 (maximum, 1 in) (AASHTO 43, ASTM C 33) as the optimum size of coarse aggregate to be used in concrete pavements (Amer. Concrete Pavement Assoc. 1972).

The results of the sieve analyses are sometimes plotted on gradation charts. A standard gradation curve is shown in Figure 2.2. The cumulative percentage passing is the ordinate (y-axis), and the successive standard sieve sizes are plotted linearly along the abcissa (x-axis). Generally, aggregates that do not have a large deficiency or excess of any size and that give smooth grading curves will give good quality concrete.

Effects of variations in coarse aggregate gradation on properties of highway concrete mixtures were studied by Baker and Scholer (1973). They indicated that variations in gradation of natural gravel, typically occurring in paving concrete, produced significant effects on workability and compressive strength. Relatively finer gradings resulted in significantly lower slump and compacting factor.

Another important parameter related to aggregate grading is fineness modulus (FM). FM is computed from screen analysis data by adding the cumulative percentage of aggregate retained on each of a specified series of sieves (ASTM C 33, AASHTO M6). FM is usually calculated only for fine aggregate and should lie between 2.3 and 3.1 (Mindess and Young 1981).

The FM of fine aggregate is important in mix proportioning because sand gradation has a large effect on workability. AASHTO M6 requires that fine aggregates be rejected if their

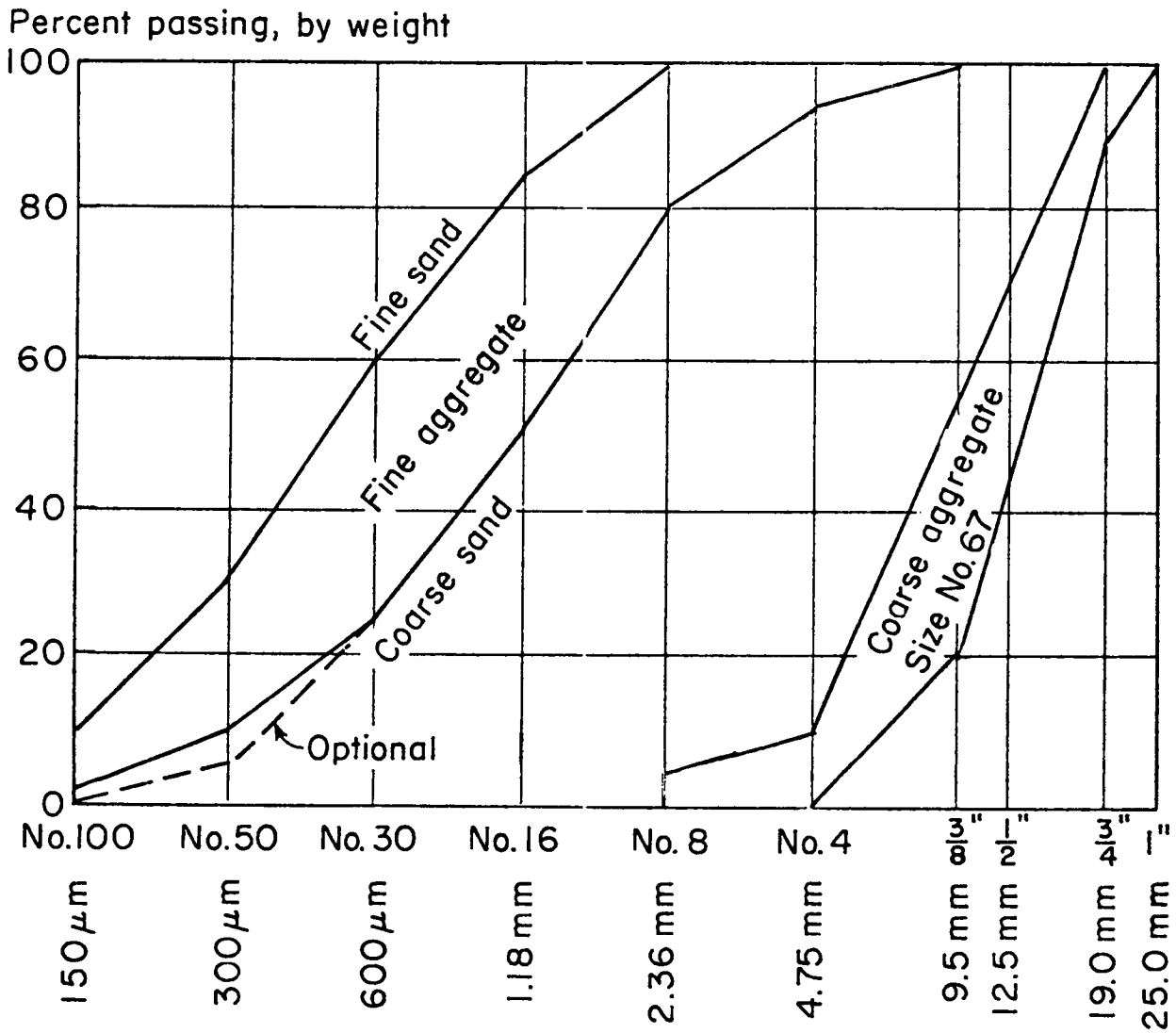

Figure 2.2. Curves indicate the limits specified in ASTM C 33 for fine aggregate and for one typically used size number (grading size) of coarse aggregate (Kosmatka and Panarese 1988).

FM varies more than ±0.2 units from the FM of the representative sample. It should be noted that FM should not be used to compare the gradings of aggregates from two different sources. Two aggregates with the same FM can have different grading curves.

The blending of two or more aggregates of different gradations to meet specification limits or, more importantly, for economic consideration is a common technique usually used on large jobs in which considerable quantities of concrete are to be used. Several blending methods were reviewed by Lee (1973). Trial and error methods; the triangular-chart, rectangular-chart, or straight-line method; and Ruthtuch's balanced area method are the most popular blending techniques used by concrete producers.

Easa (1985) presented a new blending method designed to minimize the mean deviation from midpoint specifications, minimize the cost, and yield a trade-off between mean deviation and cost.

It has been found that intermediate aggregate sizes play an important role in concrete mix design, especially for high-early strength "Fast-Track" concretes. Intermediate aggregates will fill voids typically filled by less dense cement paste, thus resulting in higher density concrete. This increase in density through the use of intermediate aggregates will result in reduction in mix water demand and, consequently, improved strength through a reduction in the mortar needed to fill void space (Amer. Concrete Pavement Assoc. 1989; Shilstone 1990). Tables for optimizing the packing density of aggregates have been developed by SHRP and allow determination of highest packing density for systems containing up to three separate coarse aggregates. ASTM Committee C9 is considering including an intermediate size aggregate in addition to the fine and coarse classifications currently specified in ASTM C 33. This action will add a third aggregate to the batching process and allow the producer of concrete to better control the total aggregate content in concrete (Bell 1991).

Abrasion Resistance. Abrasion resistance of aggregate plays an important role in pavement surface life. As the concrete's mortar surface is worn off, the pavement will rely upon the abrasion resistance of the aggregate to provide good skid resistance. Abrasion resistance of aggregate can be measured by the Los Angeles abrasion test (ASTM C 131, ASTM C 535, and AASHTO T96), which involves ball-milling the aggregate with steel balls for a given time and measuring the percentage of material worn away.

Abrasion testing of aggregate is not a reliable indication of the skid resistance of concrete made with the tested aggregate. Skid resistance of concrete is determined more accurately by abrasion tests of the concrete itself.

Experience has shown that surfaces containing crushed aggregate exhibit better initial skid resistance than do surfaces made from comparable but rounded aggregate. After a certain period of wear, however, the skid resistance of the two surfaces will become practically identical (Popovics 1979).

To provide good skid resistance on pavements, the siliceous particle content of the fine aggregate should be at least 25% (Kosmatka and Panarese 1988).

Shape and Surface Texture. The shape and surface texture of aggregate particles strongly influence the properties of fresh concrete. Compared to smooth and rounded particles, rough-textured, angular, and elongated particles require more cement paste to produce workable concrete mixtures, thus increasing the cost (Mehta 1986). Surface texture of an aggregate particle is the degree to which the surface may be defined as being rough or smooth. Surface texture depends on the hardness, grain size, and porosity of the parent rock and its subsequent exposure to forces of attrition.

Kummer and Meyer (1967) stated that sharply tipped, unpolished aggregate of adequate void width produces a high slip and skid resistance, whereas rounding of the tips due to traffic polish drastically reduces the frictional properties.

Specific Gravity and Absorption. Specific gravity is the ratio of the weight of aggregate to the weight of an equal volume of water. Bulk specific gravity, bulk specific gravity (saturated surface dry basis), and apparent specific gravity are defined in ASTM C 127 and ASTM C 128. Specific gravity is determined at a fixed moisture content. The four possible moisture conditions are damp or wet, air dried, oven dried, and saturated surface dry (SSD). Aggregate specific gravity and moisture conditions are important factors in concrete mix proportioning of aggregates. High absorption might damage the surrounding paste if the paste in concrete is subjected to freezing and thawing due to expelling absorbed water into concrete.

Summary of Aggregate Properties. The influence of aggregate characteristics on concrete properties is summarized in Table 2.4. The effects of some important aggregate properties on highway and pavement systems are shown in Table 2.5 (Marek et al. 1972).

Table 2.4 Influence of aggregate characteristics on concrete properties (Popovics 1979; Kummer and Meyer 1967; UCA 1974).

Characteristics of aggregate	Concrete properties
Size and grading	Workability of fresh concrete, economy, strength
Hardness, toughness, and wear resistance	Resistance to abrasion
Soundness	Durability, resistance to weathering
Porosity, permeability, and absorption	Resistance to freezing and thawing, durability, mix proportioning
Particle shape and surface texture	Workability, strength, abrasion resistance
Specific gravity and absorption	Mix proportioning, concrete density, durability

Availability of Aggregate Meeting Specifications

The availability and reserves of proven high-quality mineral aggregates have become matters of national concern.

The potential availability of aggregate within the contiguous 48 states was investigated by Witczak, Lovell, and Yoder (1971). Although the study is somewhat dated, it presents the basis for the distribution of quality aggregate in the country. The potential availability of aggregate for each physiographic section was estimated on a four-level rating scale: 1) abundant to adequate, 2) adequate to limited, 3) limited to problem, and 4) severe problem. This study showed that 26% of the total estimated aggregate available had a poor potential for aggregate resources (limited to problem) and that more than 5% had a very restricted potential aggregate supply (severe problem).

Shortage of aggregate, which is by definition a lack of locally available aggregate materials sufficient in quality and quantity to meet the normal requirements of a specific area for highway construction and maintenance purposes, is a result of several factors, which include 1) excessively high quality requirements, 2) zoning restrictions, 3) pollution control regulations, 4) expenses involved in hauling from distant production sites, and 5) seasonal fluctuations of highway constructions compared to more stabilized demand for aggregate from the building industry.

Table 2.5. Effects of aggregate properties on highway concrete (Marek et al. 1972).

Function	Aggregate property
1. Adequate internal strength and stability to distribute surface pressures to the subsurface grade and to prevent extensive surface deflection	Particle strength, particle stiffness, particle texture, particle shape, grading
2. Resistance to deteriorating effects of weather and chemical action	Resistance to chemical attack, wetting and drying, freezing and thawing, pore structure
3. Resistance to deteriorating effects produced by traffic	Resistance to degradation
4. Resistance to effects of internal forces, such as expansion, contraction, warping	Volume change (thermal and wet drying), pore structure, thermal conductivity
5. Aggregate and binder compatibility	Chemical compounds, reactvitiy, coatings, volume stability
6. Skid resistance	Particle shape and surface texture, particle strength, wear resistance, pore structure
7. Surface roughness	Maximum particle size, grading

Most of the aggregates used in highway construction are composed of sand, gravel, and crushed stones. The annual consumption of sand and gravel in the United States in 1988 was 900 million tons, with 1.2 billion tons of crushed stone consumed.

Distribution of aggregate types throughout the country is presented in Table 2.6, with aggregate type codes shown in Table 2.7 (Witczak, Lovell, and Yoder 1971).

Although natural aggregates are widely distributed throughout the United States, they are not always available for production where needed. The significant growth registered by the construction aggregate industries in the last 40 years also generated some of the major problems facing them today. Sources of construction aggregates are still sufficient for most of the country, but more and more metropolitan areas are experiencing supply difficulties (Tepordei 1990); therefore, searching for new aggregate sources and technologies for solving aggregate shortage problems are needed.

Stretching Aggregate Resources

There are several technologies that can be used to overcome the aggregate shortage problem in highway construction and for other applications. These technologies include 1) use of marginal aggregates, 2) beneficiation of low-quality aggregates, 3) relaxation of specifications, 4) use of synthetic aggregate, 5) use of waste materials, and 6) use of recycled concrete aggregates.

Using Marginal Aggregates. Marginal aggregates are those that do not comply with all of the normal specification requirements and would usually be rejected. However, limited use of these aggregates may be allowed if the resulting concrete will meet the specific job requirements.

In an ASTM symposium entitled "Living with Marginal Aggregates" (1976), several authors described different types of marginal aggregates and discussed possibilities and conditions of using these aggregates in concrete. Mantuani (1976) discussed work with borderline aggregates—those that are not clearly either acceptable or unsatisfactory but that have some deficiencies that make judgment about their acceptability difficult. The author

indicated that borderline aggregates can be used safely by carefully matching the properties of the aggregates to job requirements or by applying one or more of the beneficiation techniques.

ACI Committee 221 (1984) presented requirements and conditions for using marginal aggregate.

Table 2.6. Summary of general aggregate types used by states (Witczak, Lovell, and Yoder 1971).

State	Aggregate type	State	Aggregate type
Alabama	2,3,10,11,13,28,33,42,47	Nebraska	1,2,3,10
Arizona	3,10,13,21,22,23,28,31	Nevada	3,10,13,21,28,30,31
Arkansas	3,10,11,13,14,29,31	New Hampshire	3,28,31
California	3,10,11,21,28,47	New Jersey	1,3,10,11,15,21,22,28,31,33,47
Colorado	3,10,13,21,28,30,45,47	New Mexico	3,10,21,23,24,26,31,49
Connecticut	3,21	New York	3,10,11,13,22,27,28,30,31,47
Delaware	1,2,3,33	North Carolina	2,3,10,26,28,30,33
Florida	3,10,41,42	North Dakota	3,43
Georgia	3,10,12,28,30, 31,33	Ohio	1,2,10,13,47
Idaho	1,2,3,10,11,21,31,47	Oklahoma	3,10,11,13,28
Illinois	3,10,11,47	Oregon	1,2,3,21
Indiana	3,10,11,47	Pennsylvania	3,10,13,22,28,47
Iowa	3,10,11	Rhode Island	3,10,28
Kansas	3,10,11,12,23,48	South Carolina	3,10,28
Kentucky	3,10,47	South Dakota	3,10,13,28,31
Louisiana	3,42,46	Tennessee	3,10,11,13,47
Maine	3,10,13,28,31	Texas	3,10,13,21,28,30,42,47,49
Maryland	1,2,10,27,28,30,32,33,35,37	Utah	3,10,13,28,30
Massachusetts	3,10,21,22,23,26,33	Vermont	3,10,11,25,28,31,32,35
Michigan	1,2,3,10,11,13,21,23,47	Virginia	3,10,11,13,21,22,28,30,33,42
Minnesota	3,11,21,28,31		

Table 2.7. Aggregate type codes (Witczak, Lovell, and Yoder 1971).

Aggregate type	Key
I. Sands and gravels	
Sand	1
Gravel	2
Sand-gravel	3
II. Crushed stone	
A. Sedimentary	
Limestone	10
Dolomite	11
Chert	12
Sandstone	13
Novaculite	14
Argillite	15
B. Igneous	
1. Extrusive	
Basalt	21
Diabase	22
Rhyolite	23
Andesite	24
Greenstone	25
2. Intrusive	
Diorite	26
Gabbro	27
Granite	28
Syenite	29
C. Metamorphic	
1. Nonfoliated	
Marble	30
Quartzite	31
Serpentine	32
2. Foliated	
Gneiss	33
Schist	34
Amphibolite	35
III. Miscellaneous	
Limerock	40
Coquina	41
Clam and oyster shell	42
Scoria	43
Volcanic cinders	44
Pumice	45
Expanded clay	46
Slag	47
Silicified chalk	48
Caliche	49

Aggregates falling outside normal specification criteria can often be used in concrete either because the aggregates will be exposed to less severe conditions or because mixture proportioning changes made to compensate for the aggregate deficiency have been employed. For example, a sand of nonstandard grading can often be used after verification of concrete properties in trial batches. A deficiency of fine material may require the use of additional cement, mineral admixtures, air-entraining agents, or other admixtures to provide sufficient workability in low or medium cement content mixtures.

When good aggregates are not available, marginal aggregates may be an adequate and economical alternative for some applications. The transportation cost of good aggregate and the cost of using marginal aggregate should be evaluated. The cost of upgrading marginal aggregates and the required procedures associated with their use might exceed the cost of transporting specification-quality aggregates.

Beneficiation of Low-quality Aggregate. Aggregate shortages can be alleviated if marginal-or poor-quality aggregates are economically processed or treated to remove their deleterious characteristics. Low-quality aggregates can be beneficiated by mechanical processes, blending, or coating and impregnation.

Mechanical processes. Several methods of mechanical beneficiation have been used. These methods include crushing, washing, and heavy media separation. Selective crushing, in which only the soft, delcterious materials are crushed and removed by washing or heavy-media separation (Dunn 1977), can also be used.

Blending. Aggregates may be upgraded to the required specifications by being blended with other aggregates or with material having specific characteristics. There is evidence to suggest that blending freeze-thaw susceptible aggregates with durable aggregates may retard d-cracking (Bukovatz, Crumpton, and Worley 1974).

Coating and Impregnation. Aggregates can be coated by physical, chemical, thermal, or combined processes. The coating may prevent intrusion of harmful materials, increase the general strength characteristics, increase resistance to wear, increase skid resistance, and promote bonding between the aggregates and the matrix (Marek et al. 1972).

A number of fluxing agents have been developed that, when applied to the aggregate particles and heated to temperatures between 850° and 2,000° F (454° and 1,093° C), will produce waterproof, insoluble, weather-resistant surface coatings for aggregate particles (Marek et al. 1972).

Impregnation of aggregate particles can greatly reduce their absorption capacity and increase their soundness. Porous aggregates can be impregnated with gaseous or liquid-phase monomeric plastics and can be polymerized by chemical treatment (Marek et al. 1972).

A low-durability (predominantly chert) aggregate was used in concrete after being vacuum saturated with various liquids (including plain water, solutions of water and ethylene glycol, and plain ethylene glycol). Durability of this aggregate was improved when it was vacuum saturated with 100% ethylene glycol (Marek et al. 1972). Such a procedure costs much more than heavy-media separation or other mechanical methods. One approach that might be cost effective would be to apply the treatment to the float material remaining after heavy-media separation and then use this treated material in concrete.

Relaxing Specifications. Standard specifications for aggregate quality should be reviewed and, when appropriate, modified to permit use of conventional aggregates not now acceptable for specific applications. Requirements for soundness or freeze-thaw tests, for example, could be modified to allow use of more aggregate types (Dunn 1977).

Using Waste Materials. With 3.5 billion tons or more of solid waste being generated annually, the shortage of conventional aggregates in many areas makes the use of waste materials attractive. Currently, used waste materials include BFS, steel slag, fly ash, bottom

ash, boiler slag, waste glass, coal refuse, rubber tires, incinerator residue, and mine tailings (Miller and Collings 1976; Aleshin and Bortz 1976).

Waste glass and slag are two examples of waste materials used for aggregates in concrete. The use of waste glass as coarse aggregate for concrete was studied by Johnston (1974). Different mixes with glass crushed to a maximum size of 3/4 inch (19 mm) and moderate- and high-alkali cements were also used. The major concern with using waste glass in concrete is susceptibility to ASR. Using low-alkali cement, reducing cement content, and using fly ash will help overcome such a problem and may allow the use of waste glass aggregates in many instances. Slag aggregate is so widely used in highways that it is more often thought of as a conventional aggregate than as a waste material.

As defined in ASTM C 125, BFS is the nonmetallic product—consisting essentially of silicates and aluminosilicates of lime and other bases—that is developed in a molten condition simultaneously with iron in blast-furnace production. Air-cooled slag solidifies under atmospheric conditions; the cooling may then be accelerated by applying water. After being crushed and screended, BFS is utilized as a high-quality aggregate in all types of construction, including highway applications.

Mechanical properties of concrete made of slag aggregate such as compressive and flexural strength are similar to those of normal aggregate concrete (National Slag Assoc. 1958a). The excellent hardness rating of slag along with its cellular structure makes it a preferred aggregate for obtaining high skid resistance in concrete pavements, especially after initial mortar surfaces have been abraded. Because of these properties, slag concrete has been used in pavements and highway structures for many years. Many toll and Interstate highways have been constructed of slag concrete. Slag concrete has been used in constructing the runways of major commercial airports in the United States, including the Detroit, Pittsburgh, and Cleveland airports (National Slag Assoc. 1958a; National Slag Assoc. 1958b; Fowler and Lewis 1963).

The presence of excessive iron sulfide in slag may cause color and durability problems in slag concrete products, in which—under certain conditions—sulfide can be converted to sulfate; this is undesirable because of sulfate attack on concrete (Mehta 1986). For this reason, British specifications limited the content of acid-soluble SO_3 and total sulfide sulfur in slag to 0.7% and 2%, respectively (Mehta 1986).

Using Synthetic Aggregates. The use of synthetic aggregates in highway constructions is another potential solution to the aggregate shortage. Lightweight aggregates manufactured by the heat treatment of bloating clay or shale have been used in highway construction, especially bridges, for more than 60 years (Concrete Soc. Working Party 1979). The higher initial cost of lightweight concrete caused by the relatively high cost of lightweight aggregates has been more than offset by savings in reinforcement and prestressing steel (Concrete Soc. Working Party 1979).

The desirable skid-resistant properties of lightweight aggregates, which derive from their vesicular nature and their ability to maintain sharp exposed edges (cell walls) as they wear, make them attractive aggregates for use in pavements (Dahir and Rice 1978).

Lightweight aggregates have been used in concrete pavements in Texas for some time. An evaluation of the performance of concrete pavement sections made with lightweight coarse aggregates after 24 years of service was performed by CTR at the University of Texas at Austin. Won, Hankins, and McCullough (1989) stated that lightweight concrete pavement sections have maintained excellent performance records compared to siliceous gravel conventional concrete; the authors recommended that lightweight aggregates be considered as a concrete paving material on a competitive basis. Limitation on raw materials and their high production costs, however, make it difficult to justify the widespread use of lightweight aggregates in paving concrete.

Heat treatment processes used to produce lightweight aggregates from expanded clay or shale can be used to produce synthetic aggregates with more widely available raw materials, while dense aggregates could be produced using nonexpansive materials (Houston and Ledbetter 1969).

Byproducts or waste materials such as phosphate slimes or coal mine tailings might be other sources of raw material that could be heat treated.

Ceramic aggregates are another type of synthetic aggregate that can be used as skid-resistant aggregates by using specialized ceramic technology. Details concerning this process and types of aggregates were described by Dahir and Rice (1978). Although the properties of this aggregate—especially skid resistance—are very good, its use is very limited because of high production costs.

Use of Recycled Concrete Aggregate. The use of crushed waste concrete as concrete aggregates began in Europe at the end of World War II. Shortages of aggregate supplies, environmental impacts, and energy conservation issues have increased the interest in this technology (Buck 1977).

In PCC pavements (considered a major field for such technology), economic considerations are the primary reason for recycling PCC as aggregates (Forster 1985). In some urban areas, it is less expensive and more environmentally acceptable to reuse PCC than to dispose of it.

The interest in recycling old pavement as a source of aggregate for new concrete started in the early 1970s in the United States. In 1977, FHWA established Project 22 on Pavement Recycling under the National Experimental and Evaluation Program (NEEP). Forty-two states participated in this project, which has now been integrated into Demonstration Project No. 47 (Forster 1985).

Iowa was one of the pioneer states to start pavement recycling projects. In a PCC Pavement Recycling and Rehabilitation Seminar sponsored by FHWA and U.S. DOT, Huisman and Britson (1981) from Iowa DOT described three recycling projects started in 1976. The largest pavement project, carried out in 1978, was 15 miles (24.15 km) long. These projects have performed and continue to perform very well (Huisman and Britson 1981). Michigan DOT has become a leader in recycling old concrete pavements, with sixteen major projects built since 1982 (Portland Cement Assoc. 1987).

Kansas DOT has gained considerable experience in asphaltic pavement recycling and now considers it a standard construction practice. In 1986, Kansas DOT entered the field of PCC pavement recycling. Love (1987) described the first concrete pavement recycling project. There were no problems in mixing, placing, or finishing the concrete when recycled aggregates were used; and the cost of breaking, removing, and hauling existing pavement was $1.75/yd^2$ ($2.10/m^2$). Crushing and stockpiling cost $5.25/ton ($5.79/Mg).

The largest concrete pavement recycling project so far has been the Edens Expressway in Illinois. All 15 miles (24.15 km) of six-lane pavement were recycled and placed as new subbase material in 1979 and 1980 (Hansen 1986). No standard specifications have yet been developed for recycled aggregates; however, some state highway departments have developed their own specifications for recycled aggregate concrete in pavements. Iowa DOT, for example, requires that 1) the existing pavement to be crushed and used as aggregate must be thoroughly evaluated by the constructing agency; 2) during removal of the existing portland cement pavement, care must be taken to ensure minimum contamination of the salvaged concrete with the underlying subbase material or soil; and 3) the freeze-thaw durability of recycled concrete should be evaluated in accordance with ASTM C 666 Method B, modified to provide a 90-day moist period, before being tested. Durability factors are considered acceptable if they are 80% or greater.

Freeze-Thaw Susceptible Aggregates

Freeze-thaw durability of concrete aggregate is interpreted as the measure of how successfully a properly made concrete containing this aggregate can withstand the damaging effects of repeated cycles of freezing and thawing (Popovics 1979).

Freeze-thaw susceptibility of coarse aggregates in PCC pavements is considered of sufficient severity and extent to warrant detailed consideration (Cady et al. 1979).

Freeze-thaw damage to PCC pavement caused by aggregates usually results in either failure of individual aggregate particles (popouts) or failure of more generalized areas of concrete. The latter is commonly termed *d-cracking*.

Popouts are small, conical-shaped spalls on the surface of concrete that result from the excessive expansion of aggregate particles near the concrete surface (Cady et al. 1979). The destructive mechanism involves the freeze-thaw processes, but the destruction occurs mainly in particles such as glacio-fluvial origin gravel, soft siltstones, and shale that float to the surface during finishing, where they are subsequently subjected to freeze-thaw damage. Popouts can be minimized if the aggregates are beneficiated mechanically (heavy media separation).

In many freeze-thaw areas of the United States, materials engineers are faced with the possibility of the development of d-cracking in highway and airfield pavements. D-cracking in PCC pavements has been and is a serious and costly durability problem in several states, such as Ohio, Kansas, Iowa, and Illinois.

In 1969, the Ohio DOT entered into a cooperative research agreement with the Portland Cement Association (PCA) to study and evaluate the influence of environment and materials on d-cracking (Stark 1976; Klieger, Stark, and Teske 1978; Paxton 1982).

In Illinois, some PCC pavements suffered severe d-cracking deterioration and required immediate rehabilitation. As a result, in 1978 Illinois DOT initiated a program to identify and eliminate the use of d-cracking aggregates (Traylor 1982). D-cracking refers to the fine, closely spaced cracks that occur parallel and adjacent to longitudinal and transverse joints, intermediate cracks, and the free edges of pavement slabs. This cracking is initiated by the freezing and thawing of coarse aggregate particles (Stark 1976, Klieger, Stark, and Teske 1978; Paxton 1982).

Nearly all rock types associated with d-cracking are of sedimentary origin, including both carbonate and silicate materials. These range in composition from essentially pure limestone and dolomite, through those types containing varying amounts of chert and clay minerals, to essentially pure chert and argillaceous rock types such as shale.

Materials of igneous origin are not known to be associated with d-cracking. These materials include intrusive rock types such as granite, diorite, and gabbro; and extrusive or volcanic materials such as rhyolite, andesite, and basalt (Stark 1976).

It is well known that the use of nondurable coarse aggregates caused d-cracking in PCC pavements. To avoid this problem when such aggregates are used, either the environment must be altered to prevent the aggregates from becoming critically saturated (removal of moisture), which is not feasible with existing pavement design; or the aggregates selected must be inherently durable (Stark 1976).

If the performance history of aggregate is unknown, there are several methods to evaluate the performance of aggregate under freeze-thaw conditions. These methods include 1) soundness tests (ASTM C 88, AASHTO T 103 and 104); 2) Freeze-thaw tests, such as ASTM C 666 (Procedures A and B); and 3) the Iowa pore index tests. In soundness tests, the aggregate is immersed in sodium sulfate or magnesium sulfate solution, where the crystals grow in the pores to simulate the pressure developed by freezing and thawing (U.S. Dept. Trans. 1990).

Freeze-thaw tests for d-cracking generally follow ASTM C 666 procedures, except that the durability index for this case is calculated from the expansion of the specimens. In addition, the maximum number of freeze-thaw cycles is increased to 350. Failure criteria varies from state to state, ranging from 0.035 to 0.1% maximum expansion (0.06% in Illinois and 0.1% in Kansas) (Volger and Grove 1989).

In the Iowa pore index method, the aggregate is sealed into the pot of a C-231 air meter, where the water can be fed from its bottom to a certain level in a tube fixed on the top of the pot. A certain amount of air pressure is then applied to force the water into aggregate pores. The water drop in the tube (in cubic centimeters) is called the pore index. A high pore index indicates nondurable aggregate (Traylor 1982; Marks and Dubberke 1982).

The experience of Illinois with this method indicated that the pore index method is good for certain types of aggregates. A correlation between pore index and performance was observed for crushed stones. On the other hand, several sources of aggregate that had excellent performance records showed high pore indices. In addition, results have been less than satisfactory when applied to aggregates composed of mixed gravels (Traylor 1982).

A survey covering all states except those not encountering such problems was conducted by Michigan DOT (Volger and Grove 1989) regarding freeze-thaw testing of coarse aggregates in concrete. This survey showed that most of the states utilized soundness testing for aggregate durability evaluation. Freeze-thaw testing (both procedures A and B) was used by several states, including Illinois, Indiana, and Ohio. The survey also showed that some states don't perform any freeze-thaw testing of concrete aggregates.

A new method for identification of coarse aggregate susceptibility to d-cracking has been developed by the University of Washington as part of SHRP Project C-203. The method consists of pressurizing a previously oven-dried 7-pound (3-kg) sample of aggregate to 1,150 psi (7.9 MPa), holding for 2 minutes, rapidly releasing the pressure, and then repeating the pressurization cycle ten times. The sample is then oven dried, and the material is retained on the 3/8-inch (9.5-mm) sieve subjected to additional cycles. The process is repeated for a total of 50 cycles. The loss of mass of the particles retained on the 3/8-inch (9.5-mm) sieve is a good indication of the d-cracking potential of the aggregate. Smaller maximum aggregate size leads to less mass loss and therefore reflects field observations.

Alkali-reactive Aggregates

Expansion and cracking that lead to loss of strength, elasticity, and durability of concrete can result from chemical reactions involving alkali ions from portland cement (or from other sources), hydroxyl ions, and certain siliceous constituents that may be present in aggregates (Mehta 1986). ASR has been recognized as a cause of concrete deterioration since about 1940, when Stanton first identified cracking due to ASR in highway structures in California (Stanton 1940). Silica or silicates in aggregates react with alkali in the cement to form a gel-like substance. This gel absorbs water and expands; within a few years, this expanding gel can develop cracks in concrete.

ASR has continued to cause distress in highway structures since Stanton's early discovery. ASR problems in California were found to be associated with the use of cements having comparatively high alkali levels, and with aggregates containing opaline silica and glassy volcanics of rhyolitic to andesitic composition (Stanton 1940). Some areas of the country are more susceptible to ASR problems than others. A U.S. map in Figure 2.3 shows where ASR problems have been reported. ASR is probably more extensive than the map indicates because it is sometimes difficult to recognize ASR; it thus goes unreported (Nat'l Research Council 1991).

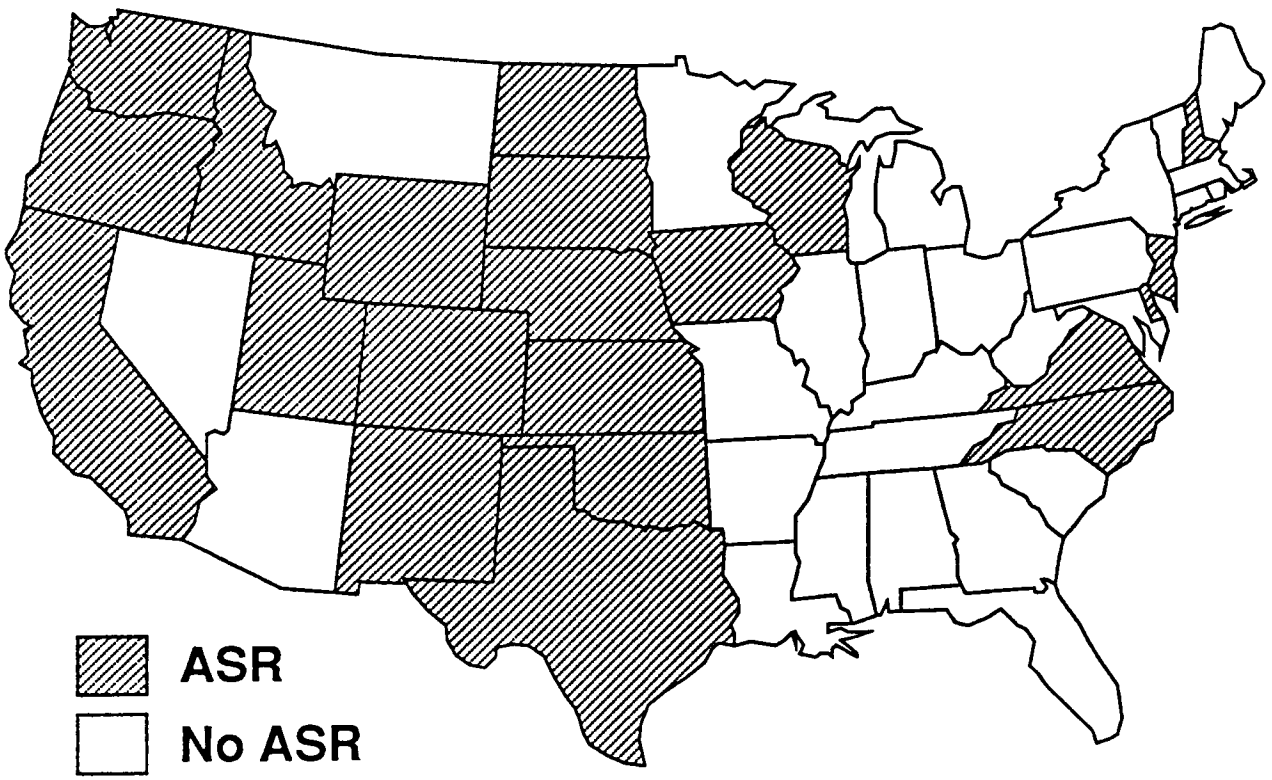

Figure 2.3. U.S. map shows the states in which alkali-silica reactivity problems have been reported (SHRP 1991).

Alkali-reactive aggregates include all silicates of silica minerals as well as silica in hydrous (opal) or amorphous (obsidian, silica glass) form. Cristobalite, tridymite, chert, cryptocrystalline volcanic rocks, and quartz have been also found to be alkali reactive (Mehta 1986).

The alkali levels of cement, the nature and amount of reactive aggregate, moisture, temperature, particle size, and the mix proportions of concrete are factors affecting ASR. The importance of environment is particularly apparent when wide differences in degree of distress observed in ASR-affected highway structures are considered. Pavements in wet climates are more likely to develop ASR earlier, but pavements in very dry climates are also often affected because of moisture from the subgrade.

Several approaches commonly used to prevent, or at least reduce, the development of ASR include 1) the use of low-alkali cement (less than 0.6% as Na_2O equivalent), 2) the use of nonreactive aggregates (Popovics 1979), and 3) the use of mineral admixtures (such as fly ash) as replacement for, or in addition to, portland cement (Dunstan 1981; Diamond 1981; Shu et al. 1983; Swamy and Al-Asali 1989; Momachi et al. 1989).

Despite the general assumption by specifying agencies that cements with alkali levels less than 0.6% are universally effective in preventing ASR, field investigations by Stark (1978) revealed that severe map cracking had developed in a significant number of pavements and bridge decks in which cement alkali levels were as low as 0.6% as Na_2O equivalent.

In addition to ASR, another type of alkali-aggregate reaction called alkali-carbonate reaction is also observed. Relatively rare argillaceous dolomitic limestones used as coarse aggregate have been shown to react with excessive cement alkali in moist environments to produce a large expansion of concrete with or without a preceding shrinkage period (Dolar-Mantuani 1971; Smith and Raba 1985). Calcite dolostones containing metastable dolomitic and possible crypto-crystalline calcite are also susceptible to reaction with alkalis (Shu et al. 1983).

In an alkali-carbonate reaction, expansion is caused by dedolomitization of meta-stable calcium-rich dolomite crystals in close proximity to clay particles (Smith and Raba 1985). Using nonreactive aggregates, low-alkali cement, and the smallest acceptable maximum particle size aggregates and eliminating, if possible, the water supply to the hardened concrete are the recommended procedures to avoid alkali-carbonate reaction. It should be noted that the use of mineral admixtures may not be effective in controlling the alkali-carbonate reactions (Popovics 1979).

Alkali-reactive Aggregate Testing. In areas susceptible to ASR, alkali reactivity testing is important in selecting aggregates to be used in concrete pavements and highway structures. Several methods are available to check the potential alkali reactivity of aggregates.

Mortar-bar Method (ASTM C 227). The mortar-bar method is used to determine the susceptibility of cement-aggregate combinations to expansive reactions involving hydroxyl ions associated with the alkalies by measurement of the increase (or decrease) in length of mortar bars containing the combination during storage under prescribed test conditions.

The mortar-bar method, although the most widely used, has some disadvantages. The method involves waiting for a long period of time (at least 6 months) for each test, and it is not reliable in a reasonable time frame for detecting slowly reactive aggregates (Hooton and Rogers 1989).

Chemical Method (ASTM C 289). This method is used to chemically determine the potential reactivity of an aggregate with alkalies in PCC as indicated by the amount of reaction during 24 hours at 176° F (80° C) between 1N sodium hydroxide solution and aggregate that has been crushed and sieved to pass a No. 50 (300-mm) sieve and be retained on a No. 100 (150-mm) sieve. This test is not reliable in all cases, but it provides useful data that may show the need for obtaining additional information through Test Method C 227 (Standard test method [chemical] 1990).

Rock Cylinder Method (ASTM C 586). This method is used to test the potential alkali reactivity of carbonate rocks for concrete aggregates. The expansive characteristics of carbonate rocks are determined while the rocks are immersed in a solution of sodium hydroxide at room temperature. This method is intended as a research screening method, not for specification enforcement (Standard test method [rock cylinder] 1990).

Osmotic Cell Method. The Osmotic cell was developed more than 30 years ago by Verbeck and Gramlich (1955) at PCA. This method partially simulates the interface between aggregate particles and the surrounding hydrated cement paste. The cell is made of lucite and consists of a reaction chamber and a reservoir chamber that are separated by a cement paste membrane (w/c, 0.55). Both chambers are filled with 1N NaOH solution, but the reaction chamber also contains 0.424 ounces (12 g) of the test aggregate crushed to the -No. 50 (300-mm) and +No. 100 (150-mm) sieve sizes. Attached to the top of both chambers are vertical capillary tubes that are filled to the same height with the 1N NaOH solution. When reaction occurs, solution flows from the reservoir chamber, through the cement paste membrane, and into the reaction chamber. The flow produces a height differential between the two capillary tubes. This differential is taken as a measure of reactivity.

A new test involves immersion of mortar bars or concretes containing the aggregates in question in a solution of 1.0 N NaOH maintained at 80° C at 1 day after demolding. Expansion is then monitored for 14 days, after which distinctions between reactive and nonreactive aggregates can be made. The test has been applied to slowly reactive aggregates with initially promising results.

A test kit for detection of alkali-silica gel has been developed. The method is an observation of the reaction gel made fluorescent by exposure to uranyl acetate solution sprayed on a freshly fractured surface of concrete. The method is described in the ASR handbook published by SHRP (SHRP-C/FR-91-101). Although the kit can be used in the field, some limited safety and environmental hazards as regards exposure to and disposal of the wash water exist; the developer recommends that, whenever possible, the method should be used in a laboratory where proper safety and disposal procedures can be followed.

Future Trends

According to a report released by the U.S. DOT following the recommendations of the Council of Public Work regarding the improvement of America's infrastructure, a significant increase in the volume of work for the infrastructure should be expected in the next 5–10 years, leading to an increased demand for construction materials—including aggregates, which dominate a major portion of construction materials.

Aggregate demand will be more influential in or near major metropolitan areas (Tepordei 1990). At the same time, land-based sources of aggregates will continue to diminish; as a result, the search for new sources will increase, and more emphasis will be placed on using recycled concrete aggregate, waste materials, and synthetic aggregates made of waste materials. The search for economical methods of upgrading low-quality aggregate will also continue.

In pavement recycling, technology will improve, and further improvement might lead to establishing standard specifications for concrete recycling. The search for more reliable testing methods for evaluating the alkali-aggregate reaction and d-cracking potential will also continue.

Admixtures

Admixtures are ingredients other than water, aggregates, hydraulic cement, and fibers that are added to the concrete batch immediately before or during mixing. A proper use of admixtures offers certain beneficial effects to concrete, including improved quality, acceleration or retardation of setting time, enhanced frost and sulfate resistance, control of strength development, improved workability, and enhanced finishability. It is estimated that 80% of concrete produced in North America these days contains one or more types of admixtures (Dolch 1984). According to a survey by the National Ready Mix Concrete Association, 39% of all ready-mixed concrete producers use fly ash, and at least 70% of produced concrete contains a water-reducer admixture (Whats, whys and hows 1989).

Admixtures vary widely in chemical composition, and many perform more than one function. Two basic types of admixtures are available: chemical and mineral. Chemical admixtures are added to concrete in very small amounts mainly for the entrainment of air, reduction of water or cement content, plasticization of fresh concrete mixtures, or control of setting time (Rixom and Mailvaganam 1986). Mineral admixtures (fly ash, silica fume [SF], and slags) are usually added to concrete in larger amounts to enhance the workability of fresh concrete; to improve resistance of concrete to thermal cracking, alkali-aggregate expansion, and sulfate attack; and to enable a reduction in cement content.

Current Technology

Air-entraining Admixtures

Air entrainment is the process whereby many small air bubbles are incorporated into concrete and become part of the matrix that binds the aggregate together in the hardened concrete. These air bubbles are dispersed throughout the hardened cement paste but are not, by definition, part of the paste (Dolch 1984). Air entrainment has now been an accepted fact in concrete technology for more than 45 years. Although historical references indicate that certain archaic and early 20th century concretes were indeed inadvertently air entrained, the New York State Department of Public Works and the Universal Atlas Cement Company were among the first to recognize that controlled additions of certain naturally occurring organic substances derived from animal and wood byproducts could materially increase the resistance of concrete in roadways to attack brought on by repeated freeze-thaw cycles and the application of deicing agents (Whiting 1983; ACI Comm. 212 1963; Rixom and Mailvaganam 1986).

Extensive laboratory testing and field investigation concluded that the formation of minute air bubbles dispersed uniformly through the cement paste increased the freeze-thaw durability of concrete. This formation can be achieved through the use of organic additives, which enable the bubbles to be stabilized or entrained within the fresh concrete (Whiting 1983, ACI Comm. 212 1963). These additives are called air-entraining agents.

Besides the increase in freeze-thaw and scaling resistances, air-entrained concrete is more workable than nonentrained concrete. The use of air-entraining agents also reduces bleeding and segregation of fresh concrete (Whiting 1983; ACI Comm. 212 1963; Rixom and Mailvaganam 1986).

Materials and Specifications. Many chemical surfactants are described in the literature to be used as air-entraining agents. The most commonly used surfactants can be categorized into four groups: 1) salts of wood resins, 2) synthetic detergents, 3) salts of petroleum acids, and 4) fatty and resinous acids and their salts (Dolch 1984; Whiting 1983).

Until the early 1980s, the majority of concrete air entrainers were based solely on salts of wood resins or neutralized Vinsol resin (Edmeades and Hewlett 1986), and most concrete highway structures and pavements were air entrained by Vinsol resin. Today, a wider variety of air-entraining agents is available and competes with Vinsol resins.

Requirements and specifications of air-entraining agents to be used in concrete are covered in ASTM C 260 and AASHTO M154. According to these specifications, each admixture to be used as an air-entraining agent should cause a substantial improvement in the resistance of concrete to freezing and thawing, and none of the essential properties of the concrete should be seriously impaired.

Factors Affecting Air Entrainment. The air-void system created by using air-entraining agents in concrete is also influenced by concrete materials and construction practice. Concrete materials such as cement, sand, aggregates, and other admixtures play an

important role in maintaining the air-void system in concrete. It has been found that air content will increase as cement alkali levels increase (Pomeroy 1989; Whiting 1983) and decrease as cement fineness increases significantly (ACI Comm. 212 1963).

Fine aggregate serves as a three-dimensional screen and traps the air; the more sand there is in the total aggregate, the greater the air content of the concrete will be (Dolch 1984).

Because the use of chemical and mineral admixtures in addition to air-entraining agents has become common practice, concrete users are always concerned about the effects of these admixtures on the air-void system and durability of concrete.

Effects of water reducers, retarders, and accelerators were widely investigated by many researchers. As regards gross air content obtained when water-reducing and retarding admixtures are used in concrete, numerous studies have shown that for most of the materials, less air-entraining agent is needed to achieve a given specified air content (Whiting 1983).

When lignosulfonate water reducers are used, less air-entraining agent is required because the lignosulfonates have a moderate air-entraining capacity, although alone they do not react as air-entraining agents (Dolch 1984; Rixom and Mailvaganam 1986). For a fixed amount of air-entraining agent, the effect of added calcium chloride is to slightly increase the air content (Edmeades and Hewlett 1986). The effect is more pronounced as amounts greater than 1% of the weight of cement are used. Some HRWR (superplasticizers) interact with cements and air-entraining agents, resulting in reductions in specific surfaces and increases in air-void spacing factors (Whiting 1983; Whiting and Stark 1983; Whiting and Dziedzic 1990).

Mineral admixtures such as fly ash and SF also affect the formation of void systems in concrete. Gebler and Klieger (1983) showed, in their study on the effect of fly ash on air-void stability of concrete, that concretes containing fly ash produced relatively stable air-void systems. However, the volume of air retained is affected by fly ash types. In mixtures containing fly ashes, the amount of air-entraining agent required to produce a given percentage of entrained air is higher, and sometimes much higher, than it is in comparable mixtures without fly ash (Gebler and Klieger 1983). In a series of papers, researchers presented the results of a study on factors that affect the air-void stability in concretes (Pigeon, Aitcin, and LaPlante 1987; Pigeon and Plante 1989). They found that SF has no significant influence on the production and stability of the air-void system during mixing and agitation. Bunke (1988) also indicated that SF has no detrimental effects on the air-void system.

Production procedures and construction practices such as retempering and vibration also affect the air-void system. Whiting and Stark (1983) have summarized the affects of concrete materials and construction practices (Tables 2.8 and 2.9).

Table 2.8. Effects of concrete constituents on air entrainment (Whiting and Stark 1983).

Constituent	Type	EFFECT ON Air content	EFFECT ON Air-void system	Corrective action(s)
Mix design	Cement content	Decrease with increase in cement content	Smaller and greater number of voids with increasing cement content.	Increase AEA* 50% for 200 lb/yd^3 increase in cement. Increase AEA 10X or more for very rich, low-slump mixtures.
	Water content	Increases with increase in water content. Very fluid mixes show loss of air.	Becomes coarser at high water content.	1-in slump increases air by 1/2–1%. Decreases AEA accordingly.
Cement	Composition	Higher fineness Type III requires more AEA. Alkali increases air content.	Effects not well defined.	Use 50–100% more AEA for Type III. Decrease AEA for high alkali.
	Contaminants	Oxidized oils increase air. Unoxidized oils decrease air.	Little apparent effect.	Obtain certification on cement. Test for contaminants if problems develop.
Aggregates	Sand	Increases with increase in sand content. Organic impurities may increase or decrease air content.	Surface texture may affect specific surface of voids.	Decrease AEA as sand content increases. Check sand with ASTM C 40 prior to acceptance.
	Coarse aggregate	Decreases as max. size of aggregage increases. Crusher fines on coarse aggregate decrease air content.	Little effect.	No action needed as required air decreases with increase in aggregate size. Hold percentage fines below 4%.
Mix water		R/M truck washwater decreases air content. Algae increase air.	Unknown.	Do not use recycled washwaters. Test water supplies for algae and other contaminants prior to acceptance.
Chemical admixtures	Water reducers/ retarders	Lignosulfonates increase air. Other types have less effect.	Spacing factors increase at higher dosages.	Decreases AEA 50–90% for lignosulfonates, esp. at lower temperatures. Decrease AEA 20–40% for other types. Do not mix admixtures prior to batching.
	Accelerators	$CaCl_2$ increases air content. Other types have little effect.	Unknown	Decrease AEA when $CaCl_2$ is used.
	Superplasticizers	Naphthalene-based materials increase air content. Highly fluid mixtures may lose air.	Produces coarser void systems. Spacing factors increase.	Use less AEA with naphthalenes. Specify 1–2% higher air content if possible.
Mineral admixtures	Fly ash	High L.O.I. or carbon decreases air content. Fineness of ash may have effect.	Little effect.	Increase AEA. May need up to 5% more with high carbon ash. "Foam Index" is useful check procedure.
	Pigments	Carbon-black based may absorb AEA, depress air content.	Unknown.	Prequalification of pigment with job materials.

*AEA, air-entraining agent.

Table 2.9. Effect of production procedures, construction practices, and environmental variables on air content (Whiting and Stark 1983).

Variable	Type	Effects	Corrective action(s)
Production procedures	Batching sequence	Simultaneous batching lowers air.	Avoid slurry-mix addition of AEA.*
		Late addition of AEA raises air.	Do not batch AEA onto cement. Maintain uniformity in batching sequence.
	Mixer capacity	Air increases as capacity is approached.	Run mixer close to full capacity, avoid overloading, clean mixer frequently.
	Mixing time	Central mixers-air increases up to 90s. Truck mixers-air increases up to 10 min. Air decreases after optimum time is reached.	Establish optimum mixing time for particular mixer. Avoid overmixing.
	Admixture metering	Accuracy, reliability of metering system will affect uniformity of air content.	Avoide manual dispensing gravity-feed system, timers. Positive displacement devices preferred. Establish frequent maintenance and calibration program.
	Haul time	Long hauls reduce air, especially in hot weather.	Optimize delivery schedules. Maintain concrete temperatures in recommended ranges.
Construction practices	Retempering	Air content increases after retempering. Ineffective beyond 4 h.	Retemper only enough to restore workability. Avoid addition of excess water.
	Consolidation	Air content decreases under prolonged vibration or at high frequencies.	Do not overvibrate. Avoid high-frequency vibrators. Avoid multiple passes of vibrating screeds.
	Transport	Some air (1–2%) normally lost during transport. Air lost in pumping and on belt conveyors, especially at higher air contents.	Avoid high air contents in pumped concrete. Do not use aluminum conveyors.
	Finishing	Air content reduced in surface layer by excessive finishing.	Avoid finishing bleed water still on surface. Avoid over-finishing. Do not sprinkle surface prior to finishing.
Environment	Temperature	Air content decreases with increase in temperature.	Increase AEA dosage as temperature increases.

*AEA, air-entraining agent.

Air Content Control. Measurement of air content is an important checking "sensor" for the concrete user to know whether concrete will resist freeze-thaw damage. Because average void spacing decreases as air content increases, an "optimum" air content at which void spacing will prevent the development of excessive pressure due to freezing and thawing will exist.

A survey conducted in the early 1980s regarding specifications for air content in highway concrete structures in all states (Whiting and Stark 1983) showed that average limits for pavement are 4.1–7.0%; average limits for bridge decks are 4.5–7.2%; and average midpoints for pavement and bridge decks are 5.6 and 5.8%, respectively.

It is important to check the air content of fresh concrete regularly for control purposes. Air content should be tested not only at the mixer but also at the point of discharge into the forms, because of losses of air content due to handling and transportation.

Chemical Admixtures (ASTM C 494)

Seven types of chemical admixtures are specified in ASTM C 494, and AASHTO M 194, depending on their purpose or purposes in PCC:

- Type A Water-reducing admixtures
- Type B Retarding admixtures
- Type C Accelerating admixtures
- Type D Water-reducing and retarding admixtures
- Type E Water-reducing and accelerating admixtures
- Type F Water-reducing, high range admixtures
- Type G Water-reducing, high-range, and retarding admixtures

General and physical requirements for each type of admixture are included in the specifications.

All chemical admixtures to be used in concrete construction should meet these specifications; if adequate information is not available, tests should be made to evaluate how the admixture will affect the properties of the concrete to be made with the specified job materials, under the anticipated ambient conditions, and by the anticipated construction procedures (ACI Comm. 212 1963).

Water-reducing Admixtures. Water-reducing admixtures are groups of products that are added to concrete to achieve certain workability (slump) at a lower w/c than that of control concrete (Rixom and Mailvaganam 1986). Water-reducing admixtures are used to improve the quality of concrete and to obtain specified strength at lower cement content. They also improve the properties of concrete containing marginal- or low-quality aggregates and help

in placing concrete under difficult conditions (ACI Comm. 212 1963). The use of water reducers by highway agencies has been increasing over the last few years. Water reducers have been used primarily in bridge decks, low-slump concrete overlays, and patching concrete.

Composition. Water-reducing admixtures can be categorized according to their active ingredients. There are the following:

1) salts and modifications of hydroxylized carboxylic acids (HC type);

2) salts and modifications of lignosulfonic acids (lignins); and

3) polymeric materials (PS type).

The basic role of water reducers is to deflocculate the cement particles agglomerated together and release the water tied up in these agglomerations, producing more fluid paste at lower water contents.

Effect of Water-reducing Admixtures on Concrete. Use of water reducers usually reduces water demand 7–10%. A higher dosage of admixtures leads to more reduction; however, excess retardation may be encountered (Admixtures and ground slag 1990). Many of the water-reducing admixtures tend also to retard the setting time of the concrete. This effect is counteracted in Type A and Type E chemical admixtures by adding other acceleration chemicals such as calcium chloride (Admixtures and ground slag 1990) or triethanolamine (TEA). HC admixtures tend to increase bleeding and should be used with care in high-slump concrete. Lignosulfonate-based admixtures perform better in this regard because they entrain air; normal dosages of lignin admixtures may add 1–2% of entrained air to the concrete. All water-reduced concretes usually lose slump more quickly than do equivalent concretes without the admixtures. However, this loss generally does not create problems when conventional water reducers (HC, PC, and lignins types) are used (Admixtures and ground slag 1990; Previte 1977; Collepardi 1984).

It is well known now that using water-reducing admixtures increases concrete strength. Increases in compressive strength are as much as 25% greater than would be anticipated from the decrease in w/c (Mindess and Young 1981). For flexural strength, an increase of 10% for concrete at 7 days to 1 year has been reported for lignosulfonate and hydroxycarboxylic admixtures (Collepardi 1984). Freeze-thaw resistance and other durability aspects can also be improved when water-reducing admixtures are properly used in concrete.

Although using admixtures in concrete improves concrete's properties, misusing any kind of admixtures will negatively affect these properties. It is therefore important to follow the manufacturer's recommendations whenever admixtures are used.

Set-retarding Admixtures. Retarding admixtures (retarders) are known to delay hydration of cement without affecting the long-term mechanical properties. They are used in concrete to offset the effect of high temperatures, which decrease setting times, or to avoid complications when unavoidable delays between mixing and placing occur (Mindess and Young 1981). Use of set retarders in concrete pavement construction 1) enables farther hauling, thus eliminating the cost of relocating central mixing plants; 2) allows more time for texturing or plastic grooving of concrete pavements; 3) allows more time for hand finishing around the headers at the start and end of the production day; and 4) helps eliminate cold joints in two-course paving and in the event of equipment breakdown (Amer. Concrete Pavement Assoc. 1975). Retarders can also be used to resist cracking due to form deflection that can occur when horizontal slabs are placed in sections (Mindess and Young 1981). Because of these advantages, set retarders are considered the second most commonly used admixtures in the highway industry, especially in the construction of bridge decks (U.S. Dept. Trans. 1990).

Composition and Mechanism of Retardation. As mentioned earlier, many of the water reducers have a retarding tendency. Therefore, some of the ingredients in water reducers, such as lignosulfate acids and hydroxycarboxylic acids, are also a basis for set-retarding admixtures. Other important materials used in producing set retarders are sugars and their derivatives.

Mechanisms of set retardation were studied by many researchers. Several theories have been offered to explain this mechanism. A review of these theories was presented by Young (1972). The role of retarding admixtures can be explained in a simple way: the admixtures form a film around the cement compounds (e.g., by absorption), thereby preventing or slowing the reaction with water. The thickness of this film will dictate how much the rate of hydration is retarded. After a while, this film breaks down, and normal hydration proceeds (Fattuhi 1958). However, in some cases when the dosage of admixtures exceeds a certain critical point, hydration of cement compounds will never proceed beyond a certain stage, and the cement paste will never set. Thus, it is important to avoid overdosing a concrete with a retarding admixture.

Other factors influencing the degree of retardation include the w/c, cement content, C_3A and alkali contents in cement, the type and dosage of the admixture, and the stage at which the retarder is added to the mix. The effectiveness of retarder is increased if its addition to the fresh concrete is delayed for a few minutes.

Effect on Concrete Properties and Application. In addition to their role in controlling setting time, retarders—like any other admixtures—influence the properties of fresh and hardened concrete. Air entrainment of concrete is affected and fewer air-entraining agents need to be used because some retarders entrain air (see water reducers). Slump loss might increase even when abnormal setting behavior does not occur.

Because of retarding action, the 1-day strength of the concrete is reduced. However, ultimate strength is reported to be improved by using set-controlling admixtures. Rates of drying shrinkage and creep could increase by using retarders, but the ultimate values cannot increase.

One of the most important applications of retarding admixtures is hot-weather concreting, when delays between mixing and placing operation, may result in early stiffening (Fattuhi 1958). Another important application is in prestressed concrete, where retarders prevent the concrete that is in contact with the strand from setting before vibrating operations are completed. Set retarders also allow use of high-temperature curing in prestressed concrete production without affecting the ultimate strength of the concrete.

Accelerating Admixtures. Accelerating admixtures are added to concrete either to increase the rate of early strength development or to shorten the time of setting, or both. Chemical compositions of accelerators include some of inorganic compounds such as soluble chlorides, carbonates, silicates, fluosilicates, and some organic compounds such as triethanolamine.

Among all these accelerating materials, calcium chloride is the most common accelerator used in concrete. Most of the available literature treats calcium chloride as the main accelerator and briefly discusses the other types of accelerators. However, growing interest in using "chloride-free" accelerators as replacement for calcium chloride has been observed. This is because calcium chloride in reinforced concrete promotes corrosion activity of steel reinforcement, especially in moist environments.

Calcium Chloride. Calcium chloride ($CaCl_2$) is a byproduct of the Solvay process for sodium carbonate manufacture.

$$\underset{\text{limestone}}{CaCO_3} + \underset{\text{brine solution}}{2NaCl} \rightarrow Na_2CO_3 + CaCl_2$$

Calcium chloride is available in two forms. Regular flake calcium chloride (ASTM D 98 Type 1) contains a minimum of 77% $CaCl_2$; concentrated flake, pellet, or granular calcium chloride (ASTM D 98 Type 2) contains a minimum of 94% $CaCl_2$ (ACI Comm. 212 1963). A 29% solution of $CaCl_2$ is the most frequent form of liquid product commercially available. In solid or liquid form, the product should meet the requirement for ASTM C 494, Type C and ASTM D 98 (Admixtures and ground slag 1990).

Calcium chloride has been used in concrete since 1885 (Rixom and Mailvaganam 1986) and finds application mainly in cold weather, when it allows the strength gain to approach that of concrete cured under normal curing temperatures (Rixom and Mailvaganam 1986). In normal conditions, calcium chloride is used to speed up the setting and hardening process for earlier finishing or mold turnaround.

Mechanisms of acceleration have been well researched. Ramachandran (1976) has discussed several theories studied by other researchers. One theory ascribed the accelerating action of $CaCl_2$ to its ability to promote the instability of the primary hydrosilicates, thus enhancing the formation of nuclei of a lower lime and a more porous hydrosilicate. This explanation is based on the observation that the addition of $CaCl_2$ to a prehydrated C_3S does not accelerate further hydration.

Effects of calcium chloride on concrete properties are also widely studied and quantified. Aside from affecting setting time, calcium chloride has a minor effect on fresh concrete properties. It has been observed that addition of $CaCl_2$ slightly increases the workability and reduces the water required to produce a given slump (Ramachandran 1984). Initial and final setting times of concrete are significantly reduced by using calcium chloride. Effects of calcium chloride on initial and final setting of cement paste are shown in Figure 2.4 (Ramachandran 1984).

Compressive and flexural strengths of concrete are substantially improved at early ages by using calcium chloride. Laboratory tests have indicated that most increases in compressive strength of concrete resulting from the use of 2% of calcium chloride by weight of cement range from 400 to 1,000 psi (2.8 to 6.9 MPa) at 1 through 7 days, for 70° F (21° C) curing (ACI Comm. 212 1963). Long-term strength is usually unaffected and is sometimes reduced, especially at high temperatures (Admixtures and ground slag 1990).

There is evidence that drying shrinkage of mortar or concrete is increased by using calcium chloride, especially at early ages. The large shrinkage at earlier periods may be attributed mainly to more hydration. Some work has shown that it is possible to reduce drying shrinkage by the addition of sodium sulfate (Ramachandran 1984). At early ages concrete with 2% $CaCl_2$ shows a higher resistance to freezing and thawing than that without the accelerator, but this resistance is decreased with time. It has been found, however, that addition of $CaCl_2$ up to 2% does not decrease the effectiveness of air entrainment (Ramachandran 1984).

Because of its corrosion potential, calcium chloride—especially in prestressed concrete—has been strictly limited in use. ACI Committee 222 (1988) has determined that total chloride ions should not exceed 0.08% by mass of cement in prestressed concrete. British Standard CP.110 strongly recommends that calcium chloride should never be added to concrete containing embedded metals.

Nonchloride Accelerators. Although calcium chloride is an effective and economical accelerator, its corrosion-related problem limited its use and forced engineers to look for other options, mainly nonchloride accelerating admixtures. A number of compounds—including sulfates, formates, nitrates, and triethanolamine—have been investigated. These materials have been researched and successfully used in concrete. Triethanolamine ($N(C_2H_4OH)_3$) is an oily, water-soluble liquid with a fishy odor and is produced by the reaction between ammonia and ethylene oxide. It is normally used as a

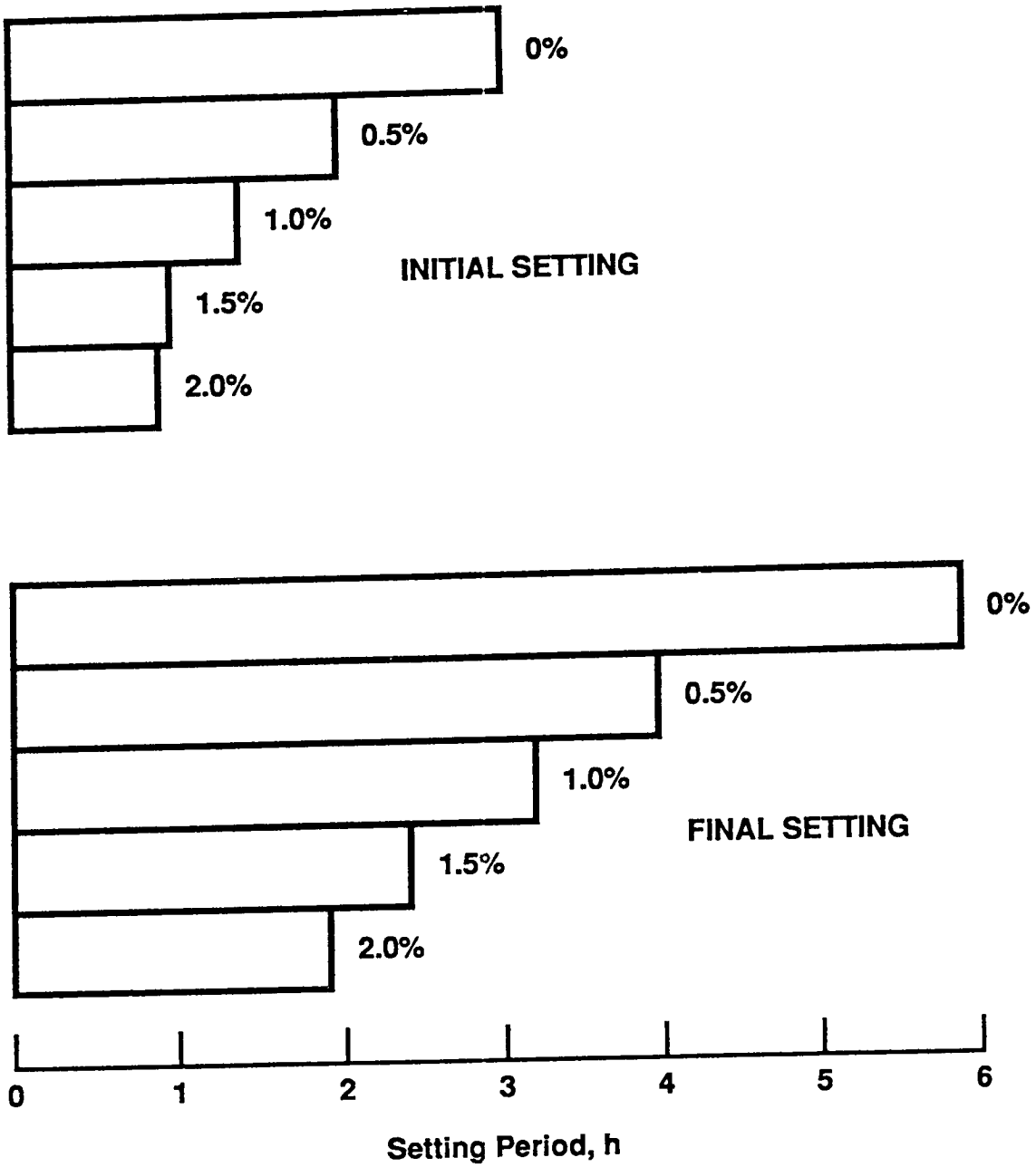

Figure 2.4. Initial and final setting periods of a cement paste containing different amounts of calcium chloride (Ramachandran 1984).

component in other admixture formulations and rarely, if ever, as a sole ingredient (Rixom and Ramachandran 1986). Ramachandran has studied the effect of triethanolamine on the hydration of C_3A at dosages of 0.5, 1.0, 5.0 and 10.0%. It was found that triethanolamine accelerates the hydration of C_3A to the hexagonal aluminate hydrate and its conversion to the cubic aluminate hydrate (Ramachandran 1984) but does not accelerate the hydration of the silicates in cement.

Calcium formate is another type of nonchloride accelerator used to accelerate the setting time of concrete. At equal concentration, calcium formate ($Ca[OOOCH]_2$) is less effective in accelerating the hydration of C_3S than calcium chloride and a higher dosage is required to impart the same level of acceleration as that imparted by $CaCl_2$ (Ramachandran 1984). An evaluation study of calcium formate as an accelerating admixture conducted by Gebler (1983) indicated that the composition of cement, in particular gypsum (SO_3) content, had a major influence on the compressive strength development of concretes containing calcium formate. Results showed that the ratio of C_3A to SO_3 should be greater than 4 for calcium formate to be an effective accelerating admixture; and that the optimum amount of calcium formate to accelerate the concrete compressive strength appeared to be 2–3% by weight of cement (Gebler 1983). Calcium nitrate, calcium nitrite, and calcium thiosulfate are also considered accelerators.

Calcium nitrite accelerates the hydration of cement, as shown by the larger amounts of heat developed in its presence. Calcium nitrite and calcium thiosulfate usually increase the strength development of concrete at early ages (Ramachandran 1984).

Superplasticizers. Superplasticizers (HRWR) are a relatively new class of water reducers originally developed in Japan and Germany in the early 1960s; they were introduced in the United States in the mid-1970s.

Superplasticizers are linear polymers containing sulfonic acid groups attached to the polymer backbone at regular intervals (Verbeck 1968). Most of the commercial formulations belong to one of four families:

- Sulfonated melamine-formaldehyde condensates (SMF)
- Sulfonated naphthalene-formaldehyde condensates (SNF)
- Modified lignosulfonates (MLS)
- Polycarboxylate derivatives

The sulfonic acid groups are responsible for neutralizing the surface charges on the cement particles and causing dispersion, thus releasing the water tied up in the cement particle agglomerations and thereafter reducing the viscosity of the paste and concrete (Mindess and Young 1981).

ASTM C 494 was modified to include high-range water-reducing admixtures in the edition published in July 1980. The admixtures were designated Type F water-reducing, high-range admixtures and Type G water-reducing, high-range, and retarding admixtures (Mielenz 1984).

Interest in using superplasticizers in the United States has grown in the last 15 years. Most state highway agencies now allow superplasticizers to be used in prestressed concrete. Several state highway agencies also allow superplasticizers to be used in bridge deck concrete (U.S. Dept. Trans. 1990).

Properties of HRWR and their effects on concrete were widely researched in the last decade. At the most recent international conference held in Canada (Malhotra 1989), many papers were presented summarizing research conducted in North America and elsewhere in the world dealing with superplasticizers and their influences on concrete, especially when mineral admixtures such as fly ash and SF are used.

Effect of Superplasticizers on Concrete Properties. The main purpose of using superplasticizers is to produce flowing concrete with very high slump in the range of 7–9 inches (175–225 mm) to be used in heavily reinforced structures and in placements where adequate consolidation by vibration cannot be readily achieved. The other major application is the production of high-strength concrete at w/c's ranging from 0.3 to 0.4 (Ramachandran and Malhotra 1984).

The ability of superplasticizers to increase the slump of concrete depends on such factors as the type, dosage, and time of addition of superplasticizer; w/c; and the nature or amount of cement. It has been found that for most types of cement, superplasticizer improves the workability of concrete. For example, incorporation of 1.5% SMF to a concrete containing Type I, II and V cements increases the initial slump of 3 inches (76 mm) to 8.7, 8.5, and 9 inches (222, 216, and 229 mm), respectively. When used as water reducers, unblended SMF and SNF HRWR will have little effect on time of setting as measured by ASTM C 403. When blended HRWR (Type G) is used, concrete may exhibit retardation of 1–3.5 hours at normal ambient temperatures (Admixtures and ground slag 1990).

The capability of superplasticizers to reduce water requirements 15–30% without affecting the workability leads to production of high-strength concrete and lower permeability. Compressive strengths greater than 14,000 psi (96.5 MPa) at 28 days have been attained (Admixtures and ground slag 1990). Use of superplasticizers in air-entrained concrete can produce coarser-than-normal air-void systems. The maximum recommended spacing factor for air-entrained concrete to resist freezing and thawing is 0.008 inch (0.2 mm). In superplasticized concrete, spacing factors in many cases exceed this limit (Malhotra 1989; Philleo 1986). Even though the spacing factor is relatively high, the durability factors are above 90 after 300 freeze-thaw cycles for the same cases (Malhotra 1989). A study conducted by Siebel (1987) indicated that high workability concrete containing superplasticizer can be made with a high freeze-thaw resistance, but air content must be

increased relative to concrete without superplasticizer. This study also showed that the type of superplasticizer has nearly no influence on the air-void system.

One problem associated with using HRWR in concrete is slump loss. In a study of the behavior of fresh concrete containing conventional water reducers and HRWR, Whiting and Dziedzic (1989) found that slump loss with time is very rapid in spite of the fact that second-generation HRWR are claimed not to suffer as much from the slump loss phenomenon as the first-generation conventional water reducers do. However, slump loss of flowing concrete was found to be less severe, especially for newly developed admixtures based on copolymeric formulations.

The slump loss problem can be overcome by adding the admixture to the concrete just before the concrete is placed. However, there are disadvantages to such a procedure. The dosage control, for example, might not be adequate, and it requires ancillary equipment such as truck-mounted admixture tanks and dispensers. Adding admixtures at the batch plant, beside dosage control improvement, reduces wear of truck mixers and reduces the tendency to add water onsite (Wallace 1985). New admixtures now being marketed can be added at the batch plant and can hold the slump above 8 inches (204 mm) for more than 2 hours.

Fly Ash

Fly ashes are finely divided residue resulting from the combustion of ground or powdered coal. They are generally finer than cement and consist mainly of glassy-spherical particles as well as residues of hematite and magnetite, char, and some crystalline phases formed during cooling. Use of fly ash in concrete started in the United States in the early 1930s. The first comprehensive study was that described in 1937 by R. E. Davis at the University of California (Kohubu 1968; Davis et al. 1937). The major breakthrough in using fly ash in concrete was the construction of Hungry Horse Dam in 1948 using 120,000 metric tons of fly ash. This decision by the U.S. Bureau of Reclamation paved the way for using fly ash in concrete constructions.

In addition to economic and ecological benefits, use of fly ash in concrete improves its workability, reduces segregation, bleeding, heat evolution and permeability, inhibits alkali-aggregate reaction and enhances sulfate resistance. Even though the use of fly ash in concrete increased in the last 20 years, less than 20% of the fly ash collected was used in the cement and concrete industries (Helmuth 1987).

One of the most important application fields for fly ash is PCC pavement, where a large quantity of concrete is used and economy is an important factor in concrete pavement construction. FHWA has been encouraging the use of fly ash in concrete. When the price of fly ash concrete is equal to, or less than, the price of mixes with only portland cement,

fly ash concretes are given preference if technically appropriate under FHWA guidelines (Adams 1988).

Classifications and Specifications. Two major classes of fly ash are specified in ASTM C 618 on the basis of their chemical composition resulting from the type of coal burned; these are designated Class F and Class C. Class F is fly ash normally produced from burning anthracite or bituminous coal, and Class C is normally produced from the burning of subbituminous coal and lignite (as are found in some of the western states of the United States) (Halstead 1986). Class C fly ash usually has cementitious properties in addition to pozzolanic properties, whereas Class F is rarely cementitious when mixed with water alone. All fly ashes used in the United States before 1975 were Class F (Halstead 1986; ACI Comm. 226 1987c).

The most-often-used specifications for fly ash are ASTM C 618 and AASHTO M 295. While some differences exist, these two specifications are essentially equivalent. Some state transportation agencies have specifications that differ from the standards (Admixtures and ground slag 1990). The general classification of fly ash by the type of coal burned does not adequately define the type of behavior to be expected when the materials are used in concrete.

There are also wide differences in characteristics within each class. Despite the reference in ASTM C 618 to the classes of coal from which Class F and Class C fly ashes are derived, there is no requirement that a given class of fly ash must come from a specific type of coal. For example, Class F ash can be produced from coals that are not bituminous, and bituminous coals can produce ash that is not Class F (Halstead 1986). It should be noted that current standards contain numerous physical and chemical requirements that do not serve a useful purpose. Whereas some requirements are needed for ensuring batch-to-batch uniformity, many are unnecessary (RILEM 1988).

Effect of Fly Ash on Concrete Properties. Effects of fly ash, especially Class F, on fresh and hardened concrete properties has been extensively studied by many researchers in different laboratories, including the U.S. Army Corps of Engineers, PCA, and the Tennessee Valley Authority. Research results have been presented in numerous national and international seminars. Areas in which fly ash plays important roles—such as in ASR—receive considerable attention and are widely researched.

Fresh Concrete Workability. Use of fly ash increases the absolute volume of cementitious materials (cement plus fly ash) compared to non-fly-ash concrete; therefore, the paste volume is increased, leading to a reduction in aggregate particle interference and enhancement in concrete workability. The spherical particle shape of fly ash also participates in improving workability of fly ash concrete because of the so-called "ball bearing" effect (Admixtures and ground slag 1990; ACI Comm. 226 1987c). It has been found that both classes of fly ash improve concrete workability.

Bleeding. Using fly ash in air-entrained and non-air-entrained concrete mixtures usually reduces bleeding by providing greater fines volume and lower water content for a given workability (ACI Comm. 226 1987c; Idorn and Henrisken 1984). Although increased fineness usually increases the water demand, the spherical particle shape of the fly ash lowers particle friction and offsets such effects. Concrete with relatively high fly ash content will require less water than non-fly-ash concrete of equal slump (Admixtures and ground slag 1990).

Time of Setting. All Class F and most Class C fly ashes increase the time of setting of concrete (Admixtures and ground slag 1990; ACI Comm. 226 1987c). Time of setting of fly ash concrete is influenced by the characteristics and amounts of fly ash used in concrete. For highway construction, changes in time of setting of fly ash concrete from non-fly-ash concrete using similar materials will not usually introduce a need for changes in construction techniques; the delays that occur may be considered advantageous (Halstead 1986).

Strength and Rate of Strength of Hardened Concrete. Strength of fly ash concrete is influenced by type of cement, quality of fly ash, and curing temperature compared to that of non-fly-ash concrete proportioned for equivalent 28-day compressive strength. Concrete containing typical Class F fly ash may develop lower strength at 3 or 7 days of age when tested at room temperature (Admixtures and ground slag 1990; ACI Comm. 226 1987c). However, fly ash concretes usually have higher ultimate strengths when properly cured. The slow gain of strength is the result of the relatively slow pozzolanic reaction of fly ash. In cold weather, the strength gain in fly ash concretes can be more adversely affected than the strength gain in non-fly-ash concrete. Therefore, precautions must be taken when fly ash is used in cold weather (Admixtures and ground slag 1990).

Freeze-thaw Durability of Hardened Concrete. On the basis of a comparative experimental study of freeze-thaw durability of conventional and fly ash concrete (Soroushian 1990; Virtanen 1983; Lane and Best 1982), it has been observed that the addition of fly ash has no major effect on the freeze-thaw resistance of concrete if the strength and air content are kept constant. Addition of fly ash may have a negative effect on the freeze-thaw resistance of concrete when a major part of the cement is replaced by fly ash. The use of fly ash in air-entrained concrete will generally require an increase in the dosage rate of the air-entraining admixture to maintain constant air. Air-entraining admixture dosage depends on carbon content, loss of ignition, fineness, and amount of organic material in the fly ash (ACI Comm. 226 1987c).

Carbon content of fly ash, which is related to the coal burned by the producing utility of the type and condition of furnaces in the production process of fly ash, influences the behavior of admixtures in concrete. It has been found that high-carbon-content fly ash reduces the effectiveness of admixtures such as air-entraining agents (Joshi, Langan, and Ward 1987; Hines 1985).

Alkali-silica Reaction of Hardened Concrete. One of the important reasons for using fly ash in highway construction is to inhibit the expansion resulting from ASR. It has been found that 1) the alkalies released by the cement preferentially combine with the reactive silica in the fly ash rather than in the aggregate, and 2) the alkalies are tied up in nonexpansive calcium-alkali-silica gel. Thus hydroxyl ions remaining in the solution are insufficient to react with the material in the interior of the larger reactive aggregate particles and disruptive osmotic forces are not generated (Halstead 1986; Olek, Tikalsky, and Carrasquillo 1986; Farbiarz and Carrasquillo 1986).

In a paper presented at the 8th International Conference on alkali-aggregate reactivity held in Japan in 1989, Swamy and Al-Asali indicated that ASR expansion is generally not proportional to the percentage of cement replacement by fly ash. The rate of reactivity, the replacement level, the method of replacement, and the environment all have a profound influence on the protection against ASR afforded by fly ash. Several investigators (Mehta 1980; Diamond 1981; Hobbs 1982) have stated that ASR expansions correlated better with water-soluble alkali-silica contents than with total alkali content. The addition of some high-calcium fly ash containing large amounts of soluble alkali sulfate might increase rather than decrease the alkali-aggregate reactivity (Mehta 1983). The effectiveness of different fly ashes in reducing long-term expansion varied widely; for each fly ash, this may be dependent upon its alkali content or fineness (Soroushian 1990).

Restraints on the Use of Fly Ash Concrete in Highway Constructions. It is well known now that both classes of fly ash improve the properties of concrete, but several factors and cautions should be considered when using fly ashes—especially in highway construction, where fly ash is heavily used. In a report prepared by the Virginia Highway and Transportation Research Council (VHTRC) and summarized by Halstead (1986), several restraints relating to the use of fly ash concrete for construction of highways and other highway structures were discussed. These restraints include the following: 1) special precautions may be necessary to ensure that the proper amount of entrained air is present; 2) not all fly ashes have sufficient pozzolanic activity to provide good results in concrete; 3) suitable fly ashes are not always available near the construction site, and transportation costs may nullify any cost advantage; and 4) mix proportions might have to be modified for any change in the fly ash composition.

Since the cement-fly ash reaction is influenced by the properties of the cement, it is important for a transportation agency not only to test and approve each fly ash source but also to investigate the properties of the specific fly ash-cement combination to be used for each project (Halstead 1986).

Silica Fume

Silica fume (SF) is a byproduct of the reduction of high-purity quartz with coal in electric furnaces in the production of silicon and ferrosilicon alloys. SF is also collected as a byproduct in the production of other silicon alloys such as ferrochromium, ferromanganese, ferromagnesium, and calcium silicon (ACI Comm. 226 1987b). Before the mid-1970s, nearly all SF was discharged into the atmosphere. After environmental concerns necessitated the collection and landfilling of SF, it became economically justified to use SF in various applications.

SF consists of very fine vitreous particles with a surface area on the order of 215,280 ft^2/lb (20,000 m^2/kg) when measured by nitrogen absorption techniques, with particles approximately 100 times smaller than the average cement particle. Because of its extreme fineness and high silica content, SF is a highly effective pozzolanic material (ACI Comm. 226 1987b; Luther 1990). SF is used in concrete to improve its properties. It has been found that SF improves compressive strength, bond strength, and abrasion resistance; reduces permeability; and therefore helps in protecting reinforcing steel from corrosion.

Specifications. The first national standard for use of SF ("microsilica") in concrete was adopted by AASHTO in 1990 (AASHTO Designation M 307-90). Although there are some standards already developed in Canada and several European countries, this is the only one to be developed in this country. This specification covers microsilica for use as a mineral admixture in PCC and mortar to fill small voids and in cases in which pozzolanic action is desired. It provides the chemical and physical requirements, specific acceptance tests, and packaging and package marking.

Effects on Air Entrainment and Air-void System of Fresh Concrete. The dosage of air-entraining agent needed to maintain the required air content when using SF is slightly higher than that for conventional concrete because of high surface area and the presence of carbon. This dosage is increased with increasing amounts of SF content in concrete (Admixtures and ground slag 1990; Carette and Malhotra 1983).

Effects on Water Requirements of Fresh Concrete. SF added to concrete by itself increases water demands, often requiring one additional pound of water for every pound of added SF. This problem can be easily compensated for by using HRWR (Admixtures and ground slag 1990).

Effects on Consistency and Bleeding of Fresh Concrete. Concrete incorporating more than 10% SF becomes sticky; in order to enhance workability, the initial slump should be increased. It has been found that SF reduces bleeding because of its effect on rheologic properties (Luther 1989).

Effects on Strength of Hardened Concrete. SF has been successfully used to produce very-high-strength, low-permeability, and chemically resistant concrete (Wolseifer 1984).

Addition of SF by itself, with other factors being constant, increases the concrete strength. Incorporation of SF into a mixture with HRWR also enables the use of a lower water-to-cementitious-materials ratio than may have been possible otherwise (Luther 1990). The modulus of rupture of SF concrete is usually either about the same as or somewhat higher than that of conventional concrete at the same level of compressive strength (Carette and Malhotra 1983; Luther and Hansen 1989).

Effects on Freeze-thaw Durability of Hardened Concrete. Air-void stability of concrete incorporating SF was studied by Pigeon, Aitcin, and LaPlante (1987) and Pigeon and Plante (1989). Their test results indicated that the use of SF has no significant influence on the production and stability of the air-void system. Freeze-thaw testing (ASTM C 666) on SF concrete showed acceptable results; the average durability factor was greater than 99% (Luther and Hansen 1989; Ozyildirim 1986).

Effects on Permeability of Hardened Concrete. It has been shown by several researchers that addition of SF to concrete reduces its permeability (Admixtures and ground slag 1990; ACI Comm. 226 1987b). Rapid chloride permeability testing (AASHTO 277) conducted on SF concrete showed that addition of SF (8% SF) significantly reduces the chloride permeability. This reduction is primarily the result of the increased density of the matrix due to the presence of SF (Ozyildirim 1986; Plante and Bilodeau 1989).

Effects on ASR of Hardened Concrete. SF, like other pozzolans, can reduce ASR and prevent deletrious expansion due to ASR (Tenoutasse and Marion 1987).

Use of SF in Highway Structures. Because of its low permeability and bond characteristics, SF concrete has been used in bridge deck overlays. Although use of SF in the United States is relatively recent, SF has been used in some bridges around the country. Since the first bridge deck overlay was placed in Ohio in 1984, fourteen bridge deck overlays were constructed with SF concrete up to 1990 (Bunke 1988; Bunke 1990; Luther 1987). Bunke (1988) described the first SF projects in Ohio: two bridge deck overlays were placed in 1984 and 1987, and a full-depth SF deck was placed in 1987. Laboratory investigation of the mixes used in the project were conducted. With 102 pounds/yd^3 (60 kg/m^3) SF (15% of cement weight) used in these mixes, the properties of concrete were acceptable (chloride permeability was very low compared to that in conventional concrete). Since an air-entraining agent was not used in the mix, the air-void system was coarse. However, no damage due to freezing and thawing was detected. Bunke indicated that the cost of SF concrete overlay was competitive with other materials (average cost of SF concrete overlay is \$27/yd^2 compared to \$30 for LMC and \$29 for superplasticized dense concrete).

Bunke (1990) also describes the fourteen projects conducted in Ohio using SF concrete and the observations made on each project. From their first experience, Ohio DOT decided to reduce SF content to 10% by cement weight and still maintain the required permeability and strength. Air-entraining agent was used to develop an appropriate air-void system. It seems that, even with some minor problems SF overlays have performed successfully so

far. Some recommendations, such as using a 72-hour continuous water cure and requiring a test slab of the same mix a few days before actual placement, are given (Bunke 1990).

Luther (1987) listed all the bridges in which SF was used in bridge deck overlays. According to Luther, more than 12 states have already tried SF concrete on full-scale projects. SF contents used in these projects ranged from 5 to 15.5%.

Availability and Handling. SF is available in two conditions: dry and wet. Dry silica can be provided as produced or densified with or without dry admixtures and can be stored in silos and hoppers. SF slurry with low or high dosages of chemical admixtures are available. Slurried products are stored in tanks with capacities ranging from a few thousand to 400,000 gallons (1,510 m^3) (Admixtures and ground slag 1990; Holland 1988).

Ground Granulated Blast-Furnace Slag

Although portland BFS cement, which is made by intergrinding the granulated slag with portland cement clinker (blended cement), has been used for more than 60 years, the use of separately ground slag combined with portland cement at the mixer as a mineral admixture did not start until the late 1970s (Lewis 1981). Ground granulated blast-furnace slag (GGBFS) is the granular material formed when molten iron BFS is rapidly chilled (quenched) by immersion in water. It is a granular product with very limited crystal formation, is highly cementitious in nature and, ground to cement fineness, hydrates like portland cement (Admixtures and ground slag 1990; Lewis 1981; ACI Comm. 226 1987a).

Specifications. ASTM C 989-82 and AASHTO M 302 were developed to cover GGBFS for use in concrete and mortar. Three grades based on the cementitious properties or "activity" of the slag are covered in the specifications. These grades are Grade 80, Grade 100, and Grade 120. The activity index is the compressive strength of mortar made with half-and-half combinations of the slag and portland cement expressed as a percentage of the strength of mortar made with the reference cement alone.

Effects of Slags on Properties of Fresh Concrete. Use of slag cements usually improves workability and decreases the water demand due to the increase in paste volume caused by the lower relative density of slag (Hinczak 1990). The higher strength potential of Grade 120 slag may allow for a reduction of total cementitious material. In such cases, further reductions in water demand may be possible (Admixtures and ground slag 1990).

Setting times of concretes containing slag increases as the slag content increases. An increase of slag content from 35 to 65% by mass can extend the setting time by as much as 60 minutes. This delay can be beneficial, particularly in large pours and in hot weather conditions in which this property prevents the formation of "cold joints" in successive pours.

The rate and quantity of bleeding in slag cements is usually less than that in concrete containing no slag because of the relatively higher fineness of slag. The higher fineness of slag also increases the air-entraining agent required, compared to conventional concrete. However, slag—unlike fly ash—does not contain carbon, which may cause instability and air loss in concrete.

Effect on Strength of Hardened Concrete. The compressive strength development of slag concrete depends primarily upon the type, fineness, activity index, and the proportions of slag used in concrete mixtures (Malhotra 1987). In general, the strength development of concrete incorporating slags is slow—at 1–5 days—compared with that of the control concrete. Between 7 and 28 days, the strength approaches that of the control concrete; beyond this period, the strength of the slag concrete exceeds the strength of control concrete (Admixtures and ground slag 1990). Flexural strength is usually improved by the use of slag cement, which makes it beneficial to concrete paving application where flexural strengths are important. It is believed that the increased flexural strength is the result of the stronger bonds in the cement-slag-aggregate system because of the shape and surface texture of the slag particles.

Problems occur when slag concrete is used in cold weather applications. At low temperatures, the strengths are substantially reduced up to 14 days, and the percentage of slag is usually reduced to 25–30% of replacement levels; when saw cutting of joints is required, the use of slag is discontinued (Admixtures and ground slag 1990).

Effects on Permeability of Hardened Concrete. Incorporation of granulated slags in cement paste helps in the transformation of large pores in the paste into smaller pores, resulting in decreased permeability of the matrix and of the concrete (Malhotra 1987). Rose (1987) indicated that significant reduction in permeability is achieved as the replacement level of the slag increases from 40 to 65% of total cementitious material by mass. Because of the reduction in permeability, concrete containing granulated slag may require less depth of cover than conventional concrete requires to protect the reinforcing steel.

Effects on Freeze-Thaw Durability of Hardened Concrete. Freeze-thaw durability of slag concrete has been studied by many researchers. It has been reported that resistance of air-entrained concrete incorporating GGBFS is comparable to that of conventional concrete (Malhotra 1987). Malhotra (1983) reported results of freeze-thaw tests on concrete incorporating 25–65% slag. Test results indicate that regardless of the water-to-(cement + slag) ratio, air-entrained slag concrete specimens performed excellently in freeze-thaw tests, with relative durability factors greater than 91%.

Effect on ASR of Hardened Concrete. Effectiveness of slag in preventing damage due to ASR is attributed to the reduction of total alkalies in the cement-slag blend, the lower permeability of the system, and the tying up of the alkalies in the hydration process. There have been many studies of GGBFS that has been used as partial replacement for portland

cement in concrete to reduce expansion caused by alkali-aggregate reaction (Yamamoto and Makita 1986; Moir and Lumley 1989; Mullick, Wason, and Rajkumar 1989).

Handling, Storage, and Batching. GGBFS should be stored in separate watertight silos (such as those used for cement) and should be clearly marked to avoid confusion with cement. In batching, it is recommended that portland cement be weighed first and then followed by the slag. Slag is like cement in that normal valves are adequate to stop the flow of material.

Latex Modified Concrete

A latex is a colloidal dispersion of small (diameter, 0.5–5 μm) spherical organic polymer particles in water. The particles are held in suspension in water by having their surfaces coated with a surface-active agent (surfactant). The typical polymers used in latexes include styrene butadiene, polyvinyl chloride, ethylene vinyl acetate, and acrylics (Walter 1987; Kuhlmann 1987). Although many types and formulations of latexes are manufactured, only those developed specifically for use in portland cement are suitable for mortar and concrete applications.

Among the latexes developed for portland cement, styrene butadiene is most commonly used in concrete; since its first use on a bridge deck overlay in 1957, styrene butadiene has grown to be a standard material of construction. Because of its low permeability and higher bond strength, styrene butadiene Latex Modified Concrete (LMC) became a standard protection system for bridge decks in the United States, where more than 8,000 bridge decks have been protected by this system (Clear and Chollar 1978; Kuhlmann 1981).

Principle of Latex Modification. Latex modification of cement mortar and concrete is governed by both cement hydration and polymer film formation processes in their binder phase (Ohama 1984). While the chemical reaction of cement hydration is taking place, water is being removed from the latex suspension by cement hydration, evaporation, or both. With continual water removal, the latex particles coalesce into a polymer that is interwoven in the hydrated cement particles and that coats these particles and the aggregate surfaces with a semicontinuous plastic film. This results in partially filled void spaces, as well as good adhesion between the aggregate and cement hydrates (Admixtures and ground slag 1990; Ohama 1984; ACI Subcomm. 548A 1989).

Effects of Latex Modifications on Properties of Fresh Concrete. The use of latex in concrete improves its workability because of the ball bearing action of polymer particles, the entrained air, and the dispersing effect of surfactants in the latexes (Ohama 1984). A large quantity of air is entrained in most LMCs, compared to that in ordinary concrete. Antifoaming agents are usually added to the latexes by manufacturers to control the air content in concrete (Ohama 1984; A handbook on portland cement 1985). Bleeding and

segregation of concrete are dramatically reduced by latex modification (Admixtures and ground slag 1990).

Effects on Properties of Hardened Concrete. The plastic film that coats the aggregates in LMC also imparts a ductile bond that improves the flexural strength and bonding characteristics of LMC (A handbood on portland cement 1985; Kuhlmann 1988). Freeze-thaw durability of LMC is improved by the air entrained by latex itself; there is no need to use air-entraining admixtures with LMC (A handbood on portland cement 1985). Chloride permeability of LMC under laboratory and field curing conditions was studied by Whiting and Kuhlmann (1987). Test results showed that the chloride permeability of LMC is lower than that of low-slump dense, and conventional concrete at all test ages up to 12 months.

Bridge Deck Overlay Applications. The LMC mixture recommended for overlay applications includes fine and coarse aggregates, Type I or Type II cements (Type III is sometimes used if early strength concrete is required), latex, and water. A cement factor of seven bags, or 658 pounds/yd^3 (388 kg/m^3), with a latex content of 24.5 gallons/yd^3 (3.5 L/m^3) is typical, with a fine-to-coarse-aggregate ratio of 3 to 2.

The construction techniques for using LMC on bridge decks are described by ACI Subcommittee 548A (1989). A mobile mixer designed for accurate proportioning of ingredients with continuous mixing is recommended for use with LMC. For small projects, an onsite drum mixer is acceptable. LMC should be placed directly from the mixer or pumped to the area where it is required. Self-propelled roller finishers have proven to be the most popular method of screeding and finishing LMC on bridge decks. Wet burlap followed by white or clear polyethylene film should be applied immediately after surface texturing for appropriate curing. The film and the burlap should be removed after the initial curing period (24–48 hours) to allow air drying until design strength is achieved.

The average cost of LMC is comparable to that of other materials used for bridge deck overlays—\$2.50/ft^2 (\$27/m^2).

Availability. Most of the styrene butadiene latexes manufactured today are about 50% water and 50% polymers; they are usually supplied in 55-gallon (208-L) drums, 5,000-gallon (19-m^3) tank trucks, or 20,000-gallon (75-m^3) railcars. In the United States, three major producers—Dow Chemical Co., Reichhold Chemicals, Inc., and BASF Corporations—have products that are approved by FHWA for use in concrete overlays for bridges (Kuhlmann 1990).

Fiber-reinforced Concrete

Introduction. Fiber-reinforced concrete (FRC) is made of hydraulic cements containing fine or fine and coarse aggregates and discontinuous, discrete fibers. There are several advantages to reinforcing concrete with uniformly dispersed and randomly oriented fibers, including improvement in ductility, impact resistance, tensile and flexural strength, fatigue life, and durability and abrasion resistance. Improvement in ductility is an important property of FRC; the strain capacity of concrete can be greatly increased (Soroushian and Bayasi 1987; Hannant 1978; Fanella and Naaman 1985). In addition to steel fibers, which are the most dominant fibers and the only fibers used in highway construction, several other types of fibers have the potential to improve concrete and mortar properties, these types include glass, plastic, carbon, kevlar, and wood fibers.

Steel-fiber-reinforced Concrete (SFRC) Pavements. The most significant effect of incorporating steel fibers in concrete is to delay and control the tensile cracking of concrete. This crack-controlling property of the fiber reinforcement delays, in turn, the onset of flexural and shear cracking, imparts extensive postcracking behavior, and significantly enhances the ductility and energy absorption properties of concrete. These properties, besides the increased resistance to impact and repeated loading, make SFRC an adequate material for pavement construction (Ramakrishnan et al. 1981).

Interest in using SFRC in highway structures started in the early 1960s, when bridge decks and pavements were the attractive areas for such applications in the United States. According to Hoff et al. (1977), SFRC was used in ten bridge deck surfacings constructed in the United States between 1972 and 1975. Most of these overlays were bonded to the existing deck; they developed some cracks but remained tight and have not adversely affected the riding quality of the decks. FRC was also used in pavement and overlays in residential, rural, urban, industrial, and airport areas. Summaries of these applications are contained in Hoff et al. (1977) and Hoff (1985).

A significant experimental project using SFRC pavements took place in Greene County, Iowa, in late 1973. Three fiber contents—60, 100, and 160 pounds/yd^3 (35, 59, and 94 kg/m^3)—and two overlay thicknesses—2 and 3 inches (50 and 75 mm)—were considered. Type and conditions of bond with the old slab were bonded, partially bonded, and unbonded. After 9 months of service, unbonded sections had exhibited fewer than two cracks, whereas the bonded and partially bonded overlays had shown from eight to fifteen cracks per section. It was also found that sections with higher fiber content (160 lb/yd^3 [94 kg/m^3]) performed significantly better than the sections with only 100 or 60 pounds/yd^3 of fibers (Hoff et al. 1977; Hoff 1985).

Two important applications of steel fibers have taken place in Nevada. In 1976, an aircraft parking apron at McCarran International Airport in Las Vegas was overlaid with 6 inches (150 mm) of thickness, compared to 15 inches (375 mm) of thickness that would have been required for conventional reinforced concrete. In 1980, SFRC was used in the construction

of a new taxiway at the Reno, NV, Cannon International Airport (ACI Comm. 504 1984). Steel fibers used in those two projects were crimped-end fibers 2 inches long by 0.020 inch in diameter (50 mm long by 0.5 mm in diameter), with fiber content of 85 pounds/yd^3 (50 kg/m^3). Guidance for FRC pavement design for new construction and overlays was presented by Rice (1972). The design methodology is based on the established methods used for conventional concrete pavement and then modified to take into account the properties of FRC.

Typical Properties and Applicability of FRC. First-crack strength (where the load deformation curve departs from linearity) and the ultimate flexural strength are both improved by fiber reinforcement. Increases up to 150% in first-crack flexural strength in SFRC have been reported (ACI Comm. 504 1984). Compared with plain concrete, FRC has higher toughness, ductility, and postcracking energy absorption capacity (Fiber reinforced concrete 1991; Ramakrishman, Wu, and Hosalli 1989b). Freeze-thaw durability of FRC is similar to that of conventional concrete. SFRC must be air entrained to give adequate freeze-thaw durability (Balaguru and Ramakrishman 1986).

Corrosion of steel fibers themselves is a concern for SFRC users. However, a recent study (Tatnall 1990) showed that corrosion in SFRC members will be limited to the surface skin of the concrete. Once the surface fibers corrode, there does not seem to be a propagation of the corrosion, even when the concrete is highly saturated with chloride ions (Tatnall 1990).

Practical difficulties were experienced with early full-scale FRC pavement projects. Maintaining high productivity, finishing surfaces without excessive fibers being exposed at the surface, avoiding fiber balls and tangles, and establishing appropriate mix design are the difficulties that inhibited the widespread use of steel fibers in pavements and other applications. In the last 20 years, extensive research has been conducted to solve problems related to field applications of FRC.

Superplasticizer has been used with SFRC to improve its workability and finishability (Ramakrishnan, Wu, and Hosalli 1989a). Fly ash and SF were also introduced to fiber concrete to improve its workability and durability (Bayasi and Soroushian 1989). Construction-related problems can be overcome by the use of the newly developed types of fibers. Collated fibers, for example, enter the mix as fiber groups glued together so that they don't tangle during addition but will later separate within the mix into individual fibers (Schrader 1985). Central mix plants can handle SFRC as conventional concrete. In large projects such as airfield pavements, onsite mix plants with conveyors to charge the fibers on the aggregate as it enters the mix will be appropriate.

Sealers

Deterioration of concrete highways and structures due to corrosion of steel reinforcement is a major concern for highway engineers and concrete producers. The use of deicing salts in cold regions and seawater and airborne chloride ions along coastlines are the sources of chlorides in concrete that, in the presence of moisture, lead to corrosion of embedded reinforcing steel and degradation of reinforced concrete. Sealing the concrete surface with various coatings and sealants is an alternative technology to protect the concrete from the infiltration of salt-laden waters and from the effect of weather and chemical attacks (The use of penetrating sealers 1989; Pfeifer and Scali 1981).

Sealers have been used by highway engineers on bridge decks and other highway structures for a number of decades. Numerous sealer materials have been investigated, including several types of oil and rubber, a wide variety of resins, petroleum products, silicones, and other inorganic or organic materials (Pfeifer and Scali 1981).

Sealers: Types and Properties. Linseed oil has been one of the most widely used materials. It is supplied and widely used as a solution of 50% boiled linseed oil and 50% mineral spirits or kerosene, and it usually contains cobalt, manganese, lead salts, or napthenic acids to promote rapid drying (The use of penetrating sealers 1989; Pfeifer and Scali 1981). Although linseed oil-based materials are considered the most economical concrete protection medium, their use has diminished in recent years because of their effects on surface color and reflectance of concrete as well as the need for frequent reapplications (Whiting 1990).

Penetrating sealers, or penetrants, are materials that, when applied to the concrete substrate, get absorbed and leave little or no change in the appearance of the concrete surface. The most widely used penetrants are silanes, siloxanes, and silicones. All these are produced from the same raw material "Cl. Silane" (Bratchie 1991).

Siliconates were the first generation of penetrating sealers. These highly alkaline products can be diluted with water or a water-alcohol mixture. Once applied, siliconates react with CO_2 in the atmosphere, and the active substance is formed. They are good water repellents but can be leached out if the freshly treated surface is exposed to rain. They are usually used for indoor sealing.

The second generation of penetrating sealers were silicones, which were introduced in the 1950s. The silicone resin is produced during manufacture and then dissolved in organic solvents. Silicones are effective water repellents and economical sealers. Their relatively large molecule size limits their penetrating capacity. Another disadvantage of silicone resin is that the substrate must be dry before it is treated (Bratchie 1991).

The third generation of penetrating sealer that generated more interest is silane products. When silane is applied to concrete, a chemical reaction that bonds the water and chloride-

repellent hydrocarbon group of the silane molecule to the concrete through a Si-O chemical linkage occurs (Smith 1986). Because of their small molecular size, silanes have greater penetrating power than other sealers.

The use of silane chemical on bridge decks was evaluated by Smith (1986). Two commercially available sealers were considered, and laboratory and field evaluations were conducted. Laboratory tests included moisture content, vapor permeability, and 90–450 day chloride bonding tests. Field performance evaluation was conducted on ten bridges treated with silane by conducting chloride content, half-cell potential, moisture absorption, and friction tests. Smith concluded that silane sealers are good alternate protections against moisture, chloride ingression, and corrosion of reinforcing steel for both new and existing bridge structures. According to the Oklahoma DOT report, the application cost of the silane was estimated at $7/yd^2$ ($8.40/m^2$). By 1985, the cost had dropped to $3.50/yd^2$ ($4.20/m^2$). However, there are some disadvantages to using silane, such as evaporation (especially in hot weather) and the need for moisture for the chemical reaction between the silane and concrete to form active material.

The Volatile Organic Content (VOC) laws designed to limit the amount of volatiles (hydrocarbon solvents) released into the atmosphere have limited silane use in some states. This problem opened the door for the fourth generation of penetrating sealers, which are waterborne silane-siloxanes. Sealer manufacturers, in order to overcome the VOC problem, had to increase the solids content of their products—thereby lowering the solvent content—or manufacture the existing sealers with water rather than hydrobcarbon solvents.

Sealer Testing and Qualification. The quality of a concrete sealer is a measure of its ability to withstand the variety of persistent undermining forces encountered in the field. Among the most significant are the abrasive wearing of bridge decks by traffic, ultraviolet radiation, and wet-dry and freeze-thaw cycling (Curra 1990). Several test procedures are used for evaluating the performance of sealers on concrete surfaces. These tests include AASHTO 259, NCHRP 244, ASTM C 642 ASTM C 672, ASTM C 666, AASHTO 277, penetration depth (ODOT), and skid resistance.

AASHTO procedure T259, "Resistance of Concrete to Chloride Ion Penetration," which is commonly referred to as 90-day ponding, is intended for use in determining the effects of variations in the concrete on the resistance of the concrete to chloride ion penetration. According to a survey conducted by Whiting (1990) regarding the use of penetrating sealers for concrete by highway agencies, T259 is the most widely used method for testing sealers. The second most widely used test was Series II of NCHRP 244 (Pfeifer and Scali 1981). The objective of NCHRP Report 244 was to study the effectiveness of different chemical surface sealers applied to concrete and subjected to different environmental conditions. Effectiveness of a sealer was established by its ability to prevent or minimize the intrusion of salt waters into concrete during four different laboratory test phases (Pfeifer and Scali 1981). Although these test procedures were developed for sealers applied on concrete

bridge surfaces except wear surfaces, they are considered for evaluating sealers to be used on bridge decks (Whiting 1990).

The vapor permeability test is an evaluation test developed by Oklahoma DOT to check the ability of a sealer to release moisture vapor while maintaining its water absorption reduction capacity (Smith 1986).

An interesting evaluation program for sealers to be used on concrete bridges was developed recently by Curra (1990). This program consists of two parts. In Part I, concrete specimens were treated with sealer and then subjected to a variety of simulated environmental conditions, including 1) test rack aging, in which the specimens are kept outside for three interval outdoor agings of 3 and 12 months; 2) Weather-Ometer conditioning, in which the specimens are exposed to accelerated weathering in an XWR carbon-arc Weather-Ometer on a cycle of 102 minutes of sunshine followed by 18 minutes of rain and sunshine; 3) freeze-thaw cycling, in which specimens of 3-month aging are subjected to 300 cycles of freezing and thawing; and 4) abrasion, in which the 3-month aged specimens are sandblasted with a blast cabinet that delivers 42.36 ounces (1,200 g) of #2 sand at 45 psi (3.1 MPa) to both front and back surfaces.

Upon completion of a given stress program, specimens are stored at room temperature until their weights become constant; then they are immersed in 5% saline solution for 28 days so the sealer's ability to protect against the penetration of moisture can be assessed. Part II of this program includes 1) rapid chloride permeation testing (a modification of AASHTO T277); 2) water vapor permeability; 3) instrumental analysis (gas chromatography and infrared spectroscopy); 4) determination of residue content; and 5) depth of penetration.

One point that should be considered in evaluating sealers is the type of concrete being sealed. For penetrating sealers, for example, the permeability of the concrete surface is a major factor influencing the penetration of both the sealers and the chlorides. Dense concrete is not penetrated as easily as porous concrete, so sealers with low viscosity, small molecular size, and high solids content may be required to achieve sealer penetration, which may improve sealer durability. Conversely, when porous concrete is to be sealed, care is needed to prevent the sealer from being deeply diffused into the concrete and reducing the surface waterproofing performance of the concrete (Carter 1991).

New Developments

Although more than 500 brand names of concrete admixtures are already on the market, research is continuing to develop and improve the chemical admixtures so they can be used in concrete without negatively affecting its properties. The need to use more than one chemical admixture in a concrete mixture, the use of fly ash and other mineral admixtures, and newly developed types of cements force the admixture producers to research and develop new admixtures. New admixtures now available are tailored to specific

applications (e.g., pavements) and can be used along with other admixtures in concrete and still achieve their purpose.

Although neutralized Vinsol resins dominated the concrete air-entraining market in the past, today they are in the minority. Many air-entraining agents are blends of Vinsol resin with synthetic surfactants; others combine anionic surfactants with calcium or sodium lingosulphonate or with hydroxycarboxylic acid salts (Carter 1991). Air-entraining admixtures are now available for specific concrete (e.g., low-slump concrete) or specific applications such as pavements in which air-entraining admixtures help increase resistance to scaling and reduce permeability in addition to improving freeze-thaw durability. Other air-entraining admixtures that can create ultrastable, small, and closely spaced air bubbles useful in the types of concrete known for their difficulty in entraining and maintaining the air content desired are also available. The necessity of using poorly graded sands in areas where the aggregate sources are limited has extended the use of air-entraining admixtures to applications other than frost durability.

A new material developed recently claims to increase the freeze-thaw durability of concrete without increasing the air content (Akzo Chemie 1987). A compressible microsphere with an average diameter of 0.001 inch (30 μm) when added to concrete absorbs the expansion of the freezing water and crystalizing ice. Unlike air entrainers, no air is introduced into the concrete, and the volume of spheres is low; therefore, the mechanical properties of concrete are not degraded. However, more research is needed before this material can be used in field applications.

Use of superplasticizers in highway construction and other concrete structures is increasing. Superplasticizers are now gaining more acceptance with concrete users. HRWR are now being included in slightly less than 2% of the concrete produced annually in the United States (Mielenz 1984). New superplasticizers with extended slump retention are being marketed; the old generation of superplasticizers usually caused "slump loss" problem in concrete.

More research on the use of nonchloride accelerators has recently been conducted, especially as they are used in concrete incorporating fly ash. Brook, Berkey, and Farzam (1990) studied the effect of newly developed nonchloride accelerators on concrete mixtures incorporating Class C and Class F fly ash. They concluded that this admixture accelerates the setting time and early strength development of concrete containing fly ash and allows the economical production of high-strength concrete using fly ash, while maintaining the shortened construction cycles normally obtained with concrete containing only cement. Similar results were obtained by Popovics (1985), who used Class F fly ash and commercially available nonchloride accelerators.

The renewed interest in the use of fly ash in concrete, especially in the highway industry in the last 15 years, has opened the door for more research in this area. Many research and development programs were conducted in this country and elsewhere in the world to study

all aspects of using fly ash in concrete. The idea of using high volumes of fly ash in concrete has attracted many researchers because the cost of concrete can be dramatically reduced while large amounts of fly ash can be consumed. Joshi, Langan, and Ward (1987) indicated that concrete containing 50% fly ash as cementitious matrix may develop compressive strengths at 28 days equivalent to or better than the control concrete containing no fly ash. Long-term strength of fly ash concrete is reduced especially when HRWR and air-entraining agents are used. The researchers also stated that high-fly-ash concrete with proper air entrainment may perform well under freezing and thawing conditions.

Giaccio and Malhotra (1988) have also studied the mechanical properties of concrete incorporating high volumes of Class F fly ash. Fly ash concrete with water-to-(fly ash plus cement) ratio of 0.56 has excellent mechanical properties and satisfactory resistance to repeated cycles of freezing and thawing. Use of Type III cement in such concrete appears to be essential when high strengths at early ages are required. High volumes of fly ash (80% fly ash) have been successfully used in lean concrete base (LCB) by Colorado Department of Highways (CDOH). Trial mixes were conducted, using a variety of aggregates to determine their suitability for LCB. On the basis of this research, more flexible specifications for LCB were written (Hines 1985).

A research program on the use of fly ash in concrete pavement was conducted at CTR at the University of Texas at Austin. Olek, Tikalsky and Carrasquillo (1986) studied the fresh and hardened fly ash concrete in order to establish guidelines for producing quality concrete containing fly ash. Hadchiti and Carrasquillo (1988) studied the abrasion resistance and scaling resistance of concrete containing fly ash. Type A and Type B fly ashes (ASTM Type F and C, respectively) were used at 0, 25, and 35% replacement of cement by volume. Investigations showed that strength is the most influencing factor on the abrasion resistance of concrete. The researchers recommended that the abrasion resistance of fly ash concrete is best controlled by achieving proper strength development, which can be easily accomplished by proper mix design, proper finishing techniques, and prolonged periods of moist curing. Ponding test results indicated that curing conditions are the most important factor affecting the chloride concentration in the concrete at various depths. Moist-cured concrete was found to be much more resistant to chlorides than was similar air-dried concrete.

The most recent developments in the area of SF in North America were summarized in an International Workshop on the use of SF sponsored by the Canada Center for Mineral and Energy Technology and the American Concrete Institute (1991). A study presenting some of the important long-term (10-year) properties of the first recorded North American field concrete containing SF is described by Lessard et al. (1991). A sidewalk was constructed of concrete containing 10% SF and was exposed to severe climatic conditions and regular deicer salt application. It has been found that compressive strengths compared to initial values were increased 4 to 17% at 10 years. The concrete was relatively dense and unaffected, and chloride ion permeability was extremely low. Other papers presented in the

aforementioned workshop dealt with the recent technology of using SF in Canada and the United States.

Langley and Pinsonneault (1991) studied the properties of concrete made of blended SF cement produced by St. Lawrence Cement Company Limited in Canada. Another study (Marchand, Pigeon, and Isabelle 1991) showed that the use of SF in roller-compacted concrete (RCC) significantly improves the deicer salt scaling of such concrete.

In the area of FRC, extensive research programs were carried out in many institutes and research centers in North America and Europe. A comprehensive research program is going on now at Michigan State University to study and develop new applications for FRC using different kinds of fibers, including steel, wood, carbon, cellulose, kevlar, and polypropylene fibers. Development of fibers other than steel is taking considerable effort. Polypropylene fibers are used now in concrete to control the cracking process more effectively and contribute to a number of additional concrete properties such as reduction in shrinkage and permeability and improved impact resistance (Fiber reinforced concrete 1991).

Fibers have also been used in repair materials, where they improve the mechanical and physical properties of the material. Polypropylene fibers were added to rapid-set cements to improve their properties (Popovics, Rajendran, and Penko 1987). A SHRP-IDEA research program showed that conductive concrete for cathodic protection applications can be made by using carbon fibers in concrete (National Research Council 1990). Another recent development in SFRC is the use of steel fibers in RCC (Nanni 1989) where fibers improve the postcracking strength and ductility of RCC.

As mentioned earlier, research and development on chemical admixtures is continuing. Two important admixtures, corrosion inhibitors and antifreeze admixture, have attracted attention recently because they have more implementation in concrete highway construction.

Corrosion Inhibitors. Presence of chlorides in reinforced concrete leads to corrosion of embedded reinforcing steel in concrete. In bridge decks and other highway structures, several strategies are used in order to reduce corrosion of steel by reducing the amount of chlorides reaching the embedded steel. These strategies include the use of low-slump dense concrete and LMC. Another option to be considered in this regard is the use of corrosion inhibitors. Corrosion-inhibiting admixtures are chemical compounds that, when added in small concentrations to concrete or mortar, effectively check, decrease, or prevent the reaction of metal with the environment (Mailvaganam 1984).

Corrosion inhibitors can be divided into three types--anodic, cathodic, and mixed—depending on whether they interfere with the corrosion reaction preferentially at the anodic or cathodic sites, or whether both are involved (Mailvaganam 1984). The most widely used materials belonging to the group of anodic inhibitors are calcium and sodium nitrite, benzoate, and sodium chromate. Calcium nitrite is the most popular corrosion

inhibitor used in concrete in the United States. A corrosion test program designed to study the performance of calcium nitrite in concrete and its role in inhibiting the reinforcing steel corrosion was conducted at the W. R. Grace & Co. Laboratory. This study showed that calcium nitrite significantly improves the corrosion resistance of steel in concrete over a broad range of chloride levels. Dosage rates of calcium nitrite (25–30% solids in solution) is usually 2–4% by weight of cement, depending on the application. Corrosion rates are also reduced by using calcium nitrite (Lundquist, Rosenberg, and Gaidis 1977; Berke 1985; Berke and Starke 1985). Two corrosion inhibitors, calcium nitrite (commercially available) and stannous chloride (laboratory grade), were considered in a corrosion study conducted by Hope and Ip (1989). Electrochemical measurements were used in evaluating corrosion activities. The researchers concluded that calcium nitrite showed promising corrosion-inhibiting properties. The corrosion threshold level, in terms of the ratio of nitrite to chloride ions, was between 0.07 and 0.09. Stannous chloride did not appear to be a promising corrosion inhibitor. Effects of corrosion inhibitors on concrete properties depend mainly on their types. Initial and final set times of concrete are usually accelerated when most inorganic corrosion inhibiting admixtures are used. Although calcium nitrite increases the compressive strength, most corrosion inhibitors slightly reduce the compressive strength of concrete. The bond of steel to concrete is negatively affected by using corrosion inhibitors. This is because of the strong flocculation of the cement paste by the solvents (e.g., alcohol) in which the inhibitor is dissolved and by the lack of intimate contact between the cement hydrates and steel due to the presence of rust-inhibiting films on the steel surface (Mailvaganam 1984)). Inhibitors based on sodium salts may increase the potential for alkali-aggregate reactivity. Dosage of commercially available calcium nitrite in the United States ranges from 2–6 gallons/yd^3 (10–32 L/m^3).

Although the cost of corrosion inhibitors might be relatively high, their use can be justified if they can effectively inhibit the corrosion of steel in reinforced concrete structures (such as bridges) where the cost of repairing the damage due to corrosion sometimes exceeds the initial construction cost.

Antifreeze Admixtures. In cold weather, when concrete might be cast in a temperature below 15° F (−10° C), cement hydration and strength gain will be severely decreased. In highway constructions cast in cold weather, several precautions are always taken to protect the concrete. As recommended by ACI Committee 306 (1988), concrete must be kept warm by conserving its initial and internally developed heat by insulation or by heated enclosures. Rapid-set cements or accelerating admixtures might be used to shorten the protection period (ACI Comm. 306 1988). Use of antifreezing admixtures is another method to protect the concrete cast in cold weather.

Three admixtures were developed in the USSR in the early 1950s and are now used in other countries such as Finland. Details about the experiences of other countries in using antifreeze admixtures can be found in Korhonen (1990) and in Ratinov and Rozenberg (1984).

Antifreeze Types. The purpose of using antifreeze admixtures is to depress the freezing point of water and to allow the cement to hydrate at low temperatures. The effectiveness of an antifreeze in reducing the freezing point of water is related to its eutectic point, i.e., the lowest temperature below which additional quantities of antifreeze will not depress the freezing point further (Korhonen and Cortez 1991). Calcium chloride and sodium chloride have been used as antifreeze admixtures, but their use is limited because of the corrosion-related problem.

A list of common antifreeze admixtures and their eutectic temperatures are presented in Table 2.10 (Korhonen and Cortez 1991). The amount of antifreeze needed to obtain the eutectic point is generally greater than that which can be safely used in concrete; therefore, the freezing point depression in practice is usually less than indicated in Table 2.10.

Effect of Antifreeze on Concrete. Effects of antifreeze on all physical and mechanical properties of cement and concrete are presented in detail by Ratinov and Rozenberg (1984).

Introducing antifreeze admixtures in small amounts does not cause any decrease in tensile and compressive strengths by freezing at −22 to −31°F (−30 to −35° C). However, rate of strength is affected by antifreeze admixtures. Strength gain at low temperature for antifreeze concrete is lower than that of similar concrete at room temperature. Strength gain of antifreeze concrete after 28 days of curing at low temperature is higher than that of normal concrete. For most antifreeze admixtures, concretes approach the 28-day strength of normal concrete after 90 days of low-temperature curing

(Korhonen 1990). Effect of antifreeze on concrete durability is also covered in the available literature (Korhonen 1990; Ratinov and Rozenberg 1984). It has been seen that only potassium carbonate reduces the freeze-thaw resistance of non-air-entrained concrete (Korhonen and Cortez 1991).

Another durability-related aspect of using antifreeze is the possible chemical reaction of some antifreeze admixtures with concrete constituents, i.e., aggregates. It has been found that sodium nitrite and potassium carbonate form caustic alkalies and can lead to destructive ASR. It is recommended that these admixtures not be used with silica-reactive aggregates (Ratinov and Rozenberg 1984). Some laboratory studies on using antifreeze in concrete in the United States were conducted by the U S. Army Corps of Engineers. Several types of antifreeze admixtures were investigated, and the first phase of the study was published by Korhonen and Cortez (1991). The effects of these admixtures on compressive strength were presented. This study showed that the performance of antifreeze concrete cured at temperatures significantly below 32° F (0° C) is comparable to that of conventional concrete cured at room temperature. The use of such admixtures might be cost effective when compared with the cost of procedures usually considered for cold-weather concreting (Korhonen and Cortez 1991).

Table 2.10. Antifreeze admixture types and their eutectic temperatures (Korhonen and Cortez 1991).

Name	Symbol	Eutectic temp
Ammonium hydroxide	NH_4OH	−92.5
Calcium chloride	$CaCl_2$	−49.8
Calcium nitrate	$Ca(NO_3)_2$	−28.7
Calcium nitrite	$CA(NO_2)_2$	−17.5
Sodium chloride	NACl	−21.2
Sodium nitrate	$NaNO_3$	−17.5
Sodium nitrite	$NaNO_2$	−19.5
Sodium sulfate	Na_2SO_4	−4.0
Potassium carbonate	K_2CO_3	−36.5
Urea	$CO(NH_2)_2$	−18.0

Alkali-aggregate reaction inhibitor is another miscellaneous admixture that might be considered another solution for the ASR problem. This admixutre is used to reduce ASR expansions in concrete. Soluble salts of lithium and barium have been reported to reduce expansion of mortar bars made of alkali-reactive aggregate (McCoy and Caldwell 1951). Although research work on these chemicals was conducted in the 1950s, the use of these chemicals is still in the experimental stage. Field trials of such admixtures are scheduled as part of SHRP project C-202.

Future Trends

While development and improvement of chemical admixtures continues, engineers and concrete users will become more confident in using admixtures in their concretes, and the use of chemical admixtures will steadily increase in the coming years.

Air entrainment is already a common practice in the concrete highway industry. An increasing use of synthetic surfactants as air entrainers, with emphasis on stability of the entrained air, will be observed in the coming few years. Admixture cost will become an important factor, especially when used in fly ash concrete in areas where large amounts of concrete are consumed, such as pavements. Competition among admixture manufacturers and the demand for large quantities of admixtures for large-scale projects might reduce the cost of admixtures in the future.

If the slump loss problem associated with the use of superplasticizers is overcome with the new generation of HRWR, the use of such admixtures will escalate.

Improvement in nonchloride accelerators, such as calcium nitrite (which is also an inhibitor of steel corrosion), will lead to increasing use in precasting and cold-weather concreting.

Production of dual- or triple-function admixtures (e.g., accelerating/air entraining/superplasticizer) may occur, with such products already seeing some use overseas.

The use of fly ash in concrete highway construction has been increasing steadily for the last 10 years and will continue to increase in the future. States are now competing in using fly ash. Wisconsin Electric, for example, increased its use of total ash production from 5% in 1980 to 52% in 1989. It is looking forward to using all coal ash produced at its power plants in the 1990s.

Good long-term performance of SF and LMCs will encourage engineers to use them more often. Developments in FRC might also increase its use in pavement construction.

Familiarity in using admixtures will encourage engineers and concrete users to accept the newly developed admixtures such as corrosion inhibitors and antifreeze admixtures if they can achieve the desired results, even though the cost of these materials is still relatively high.

References

A handbook on portland cement concrete & mortar containing styrene/butadiene latex. 1985. Midland, Mich.: Dow Chemicals.

ACI Committee 212. 1963. Admixtures for concrete. *ACI Journal Proceedings* 60 (11):1481–524.

ACI Committee 223. 1983. *Standard practice for the use of shrinkage-compensating concrete.* ACI 223-83. Detroit: American Concrete Institute.

ACI Committee 221. 1984. Guide for use of normal weight aggregates in concrete. *ACI Journal Proceedings* 81 (2):115–40.

ACI Committee 504. 1984. Guide for specifying, mixing, and placing and finishing steel fiber reinforced concrete. *ACI Journal* 81 (2):140–48.

ACI Committee 225R. 1985. *Guide to the selection and use of hydraulic cements.* ACI 225R-85. Detroit: American Concrete Institute.

ACI Committee 226. 1987a. *Ground granulated blast furnace slag as a cementitious constituent in concrete.* ACI 226.AR-87. Detroit: American Concrete Institute.

ACI Committee 226. 1987b. Silica fume in concrete: Preliminary report. *ACI Materials Journal* March–April:158–66.

ACI Committee 226. 1987c. *Use of fly ash in concrete.* ACI 226.3R-87. Detroit: American Concrete Institute.

ACI Committee 222. 1988. *Corrosion of metal in concrete. ACI manual of concrete practice.* Part 1. ACI 222R-85. Detroit: American Concrete Institute.

ACI Committee 306. 1988. *Cold weather concreting. ACI annual book.* Part 2. ACI 306R-78. Detroit: American Concrete Institute.

ACI Subcommittee 548A. 1989. *Styrene-butadiene latex: State-of-the-art report on polymer modified concrete.* Detroit: American Concrete Institute.

Adams, T. H. 1988. Marketing of fly ash concrete. In *MSU seminar: Fly ash applications to concrete (January),* 1.10, 5.10. East Lansing: Michigan State University.

Admixtures and ground slag for concrete. 1990. *Transportation research circular no. 365 (December).* Washington: Transportation Research Board, National Research Council.

Akzo Chemie. 1987. *Using gas-filled microspheres as freeze-thaw resistant.* Amersfoort, The Netherlands: Akzo Chemie.

Aleshin, E., and S. A. Bortz. 1976. Aggregates manufactured from waste materials. In *ASTM special technical publication 597: Living with marginal aggregates,* 85–95.

American Concrete Pavement Association. Materials and Mix Design Technical Subcommittee. 1972. *Optimum size coarse aggregate for portland cement concrete pavement.* Arlington Heights, ILL.:American Concrete Pavement Association. November.

American Concrete Pavement Association. Technical Subcommittee on Admixtures. 1975. *Instruction and check-list for practical field use and control of chemical admixtures in concrete.* Arlington Heights, Ill.: American Concrete Pavement Association. May.

American Concrete Pavement Association. 1989. *Fast Track concrete pavement.* Arlington Heights, Ill.: American Concrete Pavement Association.

Baker, S. D., and C. F. Scholer. 1973. Effects of variations in coarse-aggregate gradation on properties of portland cement concrete. *Highway Research Record,* no. 441:97–111.

Balaguru, P. N., and V. Ramakrishnan. 1986. Freeze-thaw durability of fiber reinforced concrete. *ACI Journal* 83 (3):374–81.

Bayasi, Z., and P. Soroushian. 1989. Optimum use of pozzolanic materials in steel fiber reinforced concretes. *Transportation Research Record* 1226:25–30.

Bell, L. W. 1991. Selection of concrete materials. In *Concrete construction: A vision for the nineties. Concrete technology seminar MSU-CTS no. 5 (February),* eds. P. Soroushian and S. Ravanbakhsh, 4.1–4.8. East Lansing: Michigan State University.

Berke, N. S. 1985. The effect of calcium nitrite and mix design on the corrosion resistance of steel in concrete (part I). *Corrosion/85,* paper no. 273, 273.1–273.17. National Association of Corrosion Engineers.

Berke, N. S., and P. Starke. 1985. Evaluating and testing for corrosion resistance. *Concrete International: Design and Construction* 7 (9):43–7 (September).

Bogue, R. H. 1955. *The chemistry of portland cement.* 2d ed. New York: Reinhold Publishing Corp.

Bratchie, W. N. 1991. Protecting your investment: Concrete sealers. In *Concrete construction: A vision for the nineties. Concrete technology seminar MSU-CTS no. 5 (February),* eds. P. Soroushian and S. Ravanbakhsh, 11.1–11.9. East Lansing: Michigan State University.

Brook, J. W., R. A. Berkey, and H. Farzam. 1990. A non-chloride accelerating admixture for class CF of fly ash. *Concrete International: Design and Construction* 12 (10):51–54 (October).

Buck, A. D. 1977. Recycled concrete as a source of aggregate. *ACI Journal Proceedings* 74 (5):212–19 (May).

Bukovatz, J. E., C. F. Crumpton, and H. E. Worley. 1974. Kansas concrete pavement performance as related to d-cracking. *Transportation Research Record* 525:1–8.

Bunke, D. 1988. ODOT's experiences with silica fume (microsilica) concrete. *67th annual meeting of the Transportation Research Board,* paper no. 870340 (January).

Bunke, D. 1990. Update on Ohio DOT's experience with concrete containing silica-fume. *69th annual meeting of the Transportation Research Board,* presentation no. CB 089 (January).

Cady, P. D., P. R. Blankenhorn, D. E. Kline, and D. A. Anderson. 1979. *Upgrading of low-quality aggregates for PCC and bituminous pavements.* NCHRP report no. 207 (July). Washington: Transportation Research Board, National Research Council.

Call, B. M. 1979. Slump loss with type "K" shrinkage compensating cement, concrete, and admixtures. *Concrete International: Design and Construction,* January:44–47.

Canada Center for Mineral and Energy Technology/American Concrete Institute. 1991. *International workshop on the use of silica fume in concrete (April).*

Carette, G. G., and V. M. Malhotra. 1983. Mechanical properties, durability and drying shrinkage of portland cement concrete incorporating silica fume. *Cement, Concrete, and Aggregates* 5 (1):3–13.

Carrasquillo, R. 1990. *Pyrament blended cement.* Technical report. Houston: Pyrament Lone Star Industries, Inc.

Carter, P. 1991. Sealing to improve durability of bridge infrastructure concrete. *Concrete International: Design and Construction* 13 (7):33–36.

Clear, K. C., and B. H. Chollar. 1978. *Styrene-butadiene latex modifiers for bridge deck overlay concrete.* Report no. FHWA-RD-78-35 (April). Washington: FHWA.

Collepardi, M. 1984. Water reducers/retarders. In *Concrete admixtures handbook: Properties, science, and technology,* ed. V. S. Ramachandran, 116–210. Park Ridge, N.J.: Noyes Publications.

Collins, R. J., and W. Gutt. 1988. Research on long-term properties of high alumina cement concrete. *Magazine of Concrete Research* 40 (145):195–208 (December).

Concrete Society Working Party. 1979. *A review of the international use of lightweight concrete in highway bridges.* Concrete Society technical report no. 20.

Curra, W. 1990. *Evaluation of sealers for concrete bridge decks.* Report no. DHT-21 (April). Texas State Department of Highways and Public Transportation.

Dahir, S. H., and J. M. Rice. 1978. *Alternative for the optimization of aggregate and pavement properties related to friction and wear resistance: Executive summary.* Report no. FHWA-RD-79-107 (October). Washington: FHWA.

Davis, R. E., R. W. Carlson, J. W. Kelly, and A. G. Davis. 1937. Properties of cements and concretes containing fly ash. *Proceedings, American Concrete Institute* 33:577–612.

Diamond, S. 1981. Effects of two Danish fly ashes on alkali contents of pore solutions of cement fly ash pastes. *Cement and Concrete Research* 11:383–94.

Diamond, S. 1985. Very high strength cement-based materials: A perspective. *Materials Research Society Symposia Proceedings* 142:223–43.

Dolar-Mantuani, L. 1971. Late-expansion alkali-reactive carbonate rocks. *Highway Research Record* 353:1–14.

Dolch, W. L. 1984. Air-entraining admixtures. In *Concrete admixtures handbook: Properties, science, and technology,* ed. V. S. Ramachandran, 269–300. Park Ridge, N.J.: Noyes Publications.

Dunn, J. R. 1977. Stretching our aggregate reserves. In *Transportation research news* 72 (September-October), ed. H. M. Gillespie. Washington: Transportation Research Board, National Research Council

Dunstan, E. R. 1981. The effect of fly ash on concrete alkali-aggregate reaction. *Cement, Concrete, and Aggregates* 3 (2):101–4 (Winter).

Easa, S. M. 1985. Trade-off of gradation and cost requirements in aggregate blending. *Cement, Concrete, and Aggregates* 7 (1):24–36.

Edmeades, R. M., and P. C. Hewlett. 1986. Admixtures—Present and future trends. *Concrete* 20 (8):4–7 (August).

El-Jazairi, B. 1982. Rapid repair of concrete pavings. *Concrete* 6 (9):122–50 (September).

Energetics, Incorporated. 1988. *The U.S. cement industry: An energy perspective*. Final report. Columbia, Md.: Energetics, Incorporated.

Fanella, D., and A. Naaman. 1985. Stress-strain properties of fiber reinforced mortar in compression. *ACI Journal* 82, no. 4.

Farbiarz, J., and R. L. Carrasquillo. 1986. *Effectiveness of fly ash replacement in the reduction of damage due to alkali-aggregate reaction in concrete.* Report no. FHWA/TX-87/15+450-1 (May). Texas State Department of Highways and Public Transportation.

Fattuhi, N. I. 1958. Influence of air temperature on the setting of concrete containing set retarding admixtures. *Cement, Concrete, and Aggregates* 7 (1):15–18.

Fiber reinforced concrete. 1991. Skokie, Ill.: Portland Cement Association.

Fishwick, J. H. 1982. Calcium aluminate cement concrete. *Concrete Construction,* May:437–41.

Forster, S. W. 1985. The use of recycled portland cement concrete (PCC) pavements. *Public Roads* 49, no. 2.

Fowler, E. W., and D. W. Lewis. 1963. Flexure and compression tests of high strength air-entrained slab concrete. *ACI Journal Proceedings* 60 (1):113–28.

Gebler, S. 1983. Evaluation of calcium formate and sodium formate as accelerating admixtures for portland cement concrete. *ACI Journal* 80 (5):439–44.

Gebler, S., and P. Klieger. 1983. Effect of fly ash on the air-void stability of concrete. In *ACI special publication SP-79: The use of fly ash, silica fume, slag and other mineral by-products in concrete,* ed. V. M. Malhotra, 103–42. Detroit: American Concrete Institute.

Giaccio, G. M., and V. M. Malhotra. 1988. Concrete incorporating high volumes of ASTM class F fly ash. *Cement, Concrete, and Aggregates* 10 (2):88–95 (Winter).

Grave, J. D., K. B. Jones, K. S. Bharil, A. Abdulshafi, and W. Calderwood. 1990. Fast Track and Fast Track II, Cedar Rapids, Iowa. *Transportation Research Record* 1282.

Hadchiti, K. M., and R. L. Carrasquillo. 1988. *Abrasion resistance and scaling resistance of concrete containing fly ash.* Report no. CTR3-5/9-87-481-3 (August). Austin: University of Texas Center for Transportation Research.

Halstead, W. J. 1986. *Use of fly ash in concrete.* NCHRP 127 (October). Washington: Transportation Research Board, National Research Council.

Hannant, D. J. 1978. *Fibre cements and fibre concretes.* Chichester, England: John Wiley & Sons, Ltd.

Hansen, T. C. 1986. Recycled aggregates and recycled aggregate concrete, second state-of-the-art report: Developments 1945–1985. RILEM technical committee 37-DRC. *Materials and Structures/Research and Testing,* no. 111:201–47 (May–June).

Hansen, T. C. 1990. Recycled concrete aggregate and fly ash produce concrete without portland cement. *Cement and Concrete Research* 20 (3):355–56.

Helmuth, R. 1987. *Fly ash in cement and concrete.* Skokie, Ill.: Portland Cement Association.

Hinczak, I. 1990. Alternative cements—The blue circle experience. In *Onoda Pacific Conference* 1:1–21.

Hines, D. 1985. *Fly ash use in lean concrete base. Colorado Department of Highways final report.* Report no. CODH-SMB-R-85-13 (December).

Hobbs, D. W. 1982. Influence of pulverized-fuel ash and granulated blast furnace slag upon expansion caused by the alkali-silica reaction. *Magazine of Concrete Research* 34:83–93.

Hoff, G. C. 1985. Use of steel fiber reinforced concrete in bridge decks and pavements. In *Steel fiber concrete seminar (June): Proceedings,* ed. S. P. Shah and A. Skarendahl, 67–108. Elsevier Applied Science Publishers.

Hoff, G. C., L. N. Godwin, K. L. Saucier, A. D. Buck, T. B. Husbands, and K. Mather. 1977. *Identification of candidate zero maintenance paving materials.* 2 vols. Report no. FHWA-RD-77-110 (May). Vicksburg, Miss.: U.S. Army Engineer Waterways Experiment Station.

Holland, T. C. 1988. Practical considerations for using silica fume in field concrete. *67th annual meeting of the Transportation Research Board,* paper no. 87-0067 (preprint) (January).

Hooton, R. D., and C. A. Rogers. 1989. Evaluation of rapid test methods for detecting alkali-reactive aggregates. In *8th international conference on alkali-aggregate reaction: Proceedings,* July: 439–44. Kyoto, Japan.

Hope, B. B., and K. C. Ip. 1989. Corrosion inhibitors for use in concrete. *ACI Materials Journal,* November–December:602–8.

Houston, J. T., and W. B. Ledbetter. 1969. *Effect of synthetic aggregate thermal transformation on performance of concrete.* Research report no. 81-10 (October). Texas A&M University, Texas Transportation Institute.

Huisman, C. L., and R. A. Britson. 1981. *Recycled portland cement concrete: Specifications and quality control.* Report no. FHWA-TS-82-208 (December), 140–44. Washington: FHWA.

Idorn, G. M., and K. R. Henrisken. 1984. State of the art for fly ash uses in concrete. *Cement and Concrete Research* 14 (4):463–70.

Johnston, D. C. 1974. Waste glass as coarse aggregate for concrete. *Journal of Testing and Evaluation* 2 (5):344–50.

Jones, K. 1988. *Special cements for Fast Track concrete. Final report.* Report no. MLR-87-4 (June). Iowa Department of Transportation.

Joshi, R. C., B. W. Langan, and M. A. Ward. 1987. Strength and durability of concrete with high proportions of fly ash and other mineral admixtures. In *Durability of building materials.* Vol. 4, 253–70. Amsterdam: Elsevier Science Publishers.

Klieger, P., D. Stark, and W. Teske. 1978. *The influence of environment and materials on d-cracking.* Final report (October). Skokie, Ill.: Construction Technology Laboratories.

Knutson, M., and R. Riley. 1987. Fast-Track concrete paving opens doors to industry future. *Concrete Construction* 15-3:4–13 (January).

Kohubu, M. 1969. Fly ash and fly ash cement. In *Proceedings, Fifth international symposium on the chemistry of cement (1968).* Part IV, 75–105. Tokyo: Cement Association of Japan.

Korhonen, C. J. 1990. *Antifreeze admixtures for cold regions concreting: A literature review.* Special report no. SR90-32 (September). Hanover, N.H.: U.S. Army Cold Regions Research and Engineering Laboratory.

Korhonen, C. J., and E. R. Cortez. 1991. Antifreeze admixtures for cold weather concreting. *Concrete International: Design and Construction* 13 (3):38–41 (March).

Kosmatka, S. H., and W. C. Panarese. 1988. *Design and control of concrete mixtures.* 13th ed. Skokie, Ill.: Portland Cement Association.

Kudlapur, P., A. Hanaor, P. N. Balaguru, and E. G. Nawy. 1987. *Repair of bridge deck structures in cold weather.* Report no. SNJ-DDT4-25156 (December). The State University of New Jersey, College of Engineering, Dept. of Civil Engineering.

Kudlapur, S., A. Hanaor, P. N. Balaguru, and E. G. Nawy. 1989. Evaluation of cold-weather concrete patching materials. *ACI Material Journal* November-December.

Kuhlmann, L. A. 1981. *Performance history of latex modified concrete overlays.* ACI SP-69-8, 123–43. Detroit: American Concrete Institute.

Kuhlmann, L. A. 1987. Application of styrene-butadiene latex modified concrete. *Concrete International: Design and Construction* 9 (12):48–53 (December).

Kuhlmann, L. A. 1988. *Using styrene butadiene latex in concrete overlays: Section 195.* Washington: Transportation Research Board, National Research Council.

Kuhlmann, L. A. 1990. Styrene-butadiene latex-modified concrete. *Concrete International: Design and Construction* 12 (10):59–65 (October).

Kummer, H. W., and W. E. Meyer. 1967. *Tentative skid-resistance requirements for main rural highways.* NCHRP report no. 37. Washington: Highway Research Board.

Lane, R. O., and J. F. Best. 1982. Properties of fly ash in portland cement concrete. *Concrete International: Design and Construction* 4 (7):81–92.

Langley, W. S., and P. Pinsonneault. 1991. Silica fume blended cement: Properties and applications. *Canada Center for Mineral and Energy Technology/American Concrete Institute international workshop on the use of silica fume in concrete (April).*

Lea, F. M. 1970. *The chemistry of cement and concrete.* 3d ed. London: Edward Arnold Ltd.

Lee, D. Y. 1973. Review of aggregate blending techniques. *Highway Research Record,* no. 441:111–28.

Lessard, M., S. L. Sarkar, D. W. Ksinsik, and P. C. Aitcin. Long-term behavior of silica fume concrete. *Canada Center for Mineral and Energy Technology/American Concrete Institute international workshop on the use of silica fume in concrete (April).*

Lewis, D. W. 1981. History of slag cements. Paper presented at University of Alabama Slag Cement Seminar, American Slag Association MF 186–6, April.

Living with marginal aggregates. 1976. ASTM special technical publication 597.

Love, R. M. 1987. State DOT experiments with concrete pavement recycling. *Public Works,* June:83–85.

Lundquist, J. T., A. M. Rosenberg, and J. M. Gaidis. 1977. A corrosion inhibitor formulated with calcium nitrite for chloride-containing concrete. II. Improved electrochemical test procedure. *Corrosion/77,* paper no. 126, 126.1–126.13. National Association of Corrosion Engineers.

Luther, M. D. 1987. Silica fume (microsilica) concrete in bridges in the United States. *Transportation Research Record* 1204.

Luther, M. D. 1989. Silica fume (microsilica): Production, materials and action in concrete. In *Advancements in Concrete Materials Seminar,* 18.1–18.21. Peoria, Ill.: Bradley University.

Luther, M. D. 1990. High-performance silica fume (microsilica)—Modified cementitious repair materials. *69th annual meeting of the Transportation Research Board,* paper no. 890448 (January) (preprint).

Luther, M. D., and W. Hansen. 1989. Comparison of creep and shrinkage of high-strength silica fume concretes with fly ash concretes of similar strengths. In *ACI special publication SP-114.* Vol. 1, *Fly ash, silica fume, slag and natural pozzolans in concrete*, ed. V. M. Malhotra, 573–91. Detroit: American Concrete Institute.

Macadam, D., K. Smith, D. Fowler, and A. H. Meyer. 1984. Evaluation of rapid-setting concretes. *Transportation Research Record* 1003:19–28 (July).

MacDowell, J., T. Huang, and A. Chowdhury. 1990. *Evaluation of S-HG cement as a quick-setting patching material.* Report no. ATLSS-88-1.6 (January). Bethlehem, Pa.: Lehigh University, Fritz Engineering Laboratory.

Mailvaganam, N. P. 1984. Miscellaneous admixtures. In *Concrete admixtures handbook: Properties, science, and technology,* ed. V. S. Ramachandran, 480–557. Park Ridge, N.J.: Noyes Publications.

Malhotra, V. M. 1983. Strength and durability characteristics of concrete incorporating a pelletized blast-furnace slag. In *ACI special publication SP-79: The use of fly ash, silica fume, slag and other mineral by-products in concrete,* ed. V. M. Malhotra, 892–921 and 923–31. Detroit: American Concrete Institute.

Malhotra, V. M. 1987. Properties of fresh and hardened concrete incorporating gound granulated blast furnace slag. In *Supplementary cementing materials for concrete,* ed. V. M. Malhotra, 291–331. Ottawa: Canadian Government Publishing Centre.

Malhotra, V. M. 1989. Superplasticizers: A global review with emphasis on durability and innovative concrete. In *ACI SP-119: Superplasticizers and other chemical admixtures in concrete,* ed. V. M. Malhotra, 1–19. Detroit: American Concrete Institute.

Malhotra, V. M., ed. 1989. *ACI SP-119: Superplasticizers and other chemical admixtures in concrete.* Detroit: American Concrete Institute.

Mantuani, D. 1976. Working with borderline aggregates. In *ASTM special technical publication 597: Living with marginal aggregates,* 1–9.

Marchand, J., M. Pigeon, and H. L. Isabelle. 1991. The frost durability of dry concretes containing silica fume. *Canada Center for Mineral and Energy Technology/American Concrete Institute international workshop on the use of silica fume in concrete (April).*

Marek, C. R., M. Herrin, C. E. Kesler, and E. J. Berenberg. 1972. *Promising replacements for conventional aggregates for highway use.* NCHRP report no. 135. Highway Research Board.

Marks, V. J., and W. Dubberke. 1982. Durability of concrete and the Iowa Pore Index Test. *Transportation Research Record* 853:25–31.

Massazza, F. 1987. The role of the additions to cement in the concrete durability. *Il Cemento* 84 (October–December):359–82.

Matkovich et al. 1990. *Development of strength in cement.* FHWA-RD-90-015, vol. 1: Interim report (July).

McCarter, W. J., and S. Gravin. 1989. Admixture in cement: A study of dosage rates on early hydration. *Materials and Structures* 22:112–120.

McCoy, W. J., and A. G. Caldwell. 1951. New approach to inhibiting alkali-aggregate expansion. *ACI Journal* 22 (9):693–706.

Mehta, P. K. 1980. Performance test for sulfate resistance and alkali-silica reactivity of hydraulic cements. In *ASTM STP 691: Durability of building materials and components,* 336–45.

Mehta, P. K. 1983. Pozzolanic and cementitious by-products as mineral admixtures for concrete: A practical review. In *ACI special publication SP-79: The use of fly ash, silica fume, slag and other mineral by-products in concrete*, ed. V. M. Malhotra, 1–46. Detroit: American Concrete Institute.

Mehta, P. K. 1986. *Concrete: Structure, properties, and materials.* Englewood Cliffs, N.J.: Prentice-Hall, Inc.

Meyer, L. M., and W. F. Perenchio. 1979. Theory of concrete slump loss as related to use of chemical admixtures. *Concrete International: Design and Construction* 1 (1):36–43.

Mielenz, R. 1984. History of chemical admixtures for concrete. *Concrete International: Design and Construction* 6 (4):40–54 (April).

Miller, R. H., and R. J. Collings. 1976. *Waste materials: Potential replacements for highway aggregates.* NCHRP report no. 166. Washington: Transportation Research Board, National Research Council.

Mindess, S., and J. F. Young. 1981. *Concrete.* Englewood Cliffs, N.J.: Prentice-Hall, Inc.

Moir, G. K., and J. S. Lumley. 1989. Influence of partial cement replacement by ground granulated furnace slag on the expansion of concrete prisms containing reactive aggregate. In *9th international conference on alkali-aggregate reaction: Proceedings*, 199–204. Kyoto, Japan.

Mullick, A. K., R. C. Wason, and C. Rajkumar. 1989. Performance of commercial blended cements in alleviating ASR. In *8th international conference on alkali-aggregate reaction: Proceedings*, 211–16. Kyoto, Japan.

Nanni, A. 1989. Properties and design of fiber reinforced roller compacted concrete. *Transportation Research Record* 1226:61–68.

National Material Advisory Board. 1987. *Concrete durability: A multi-billion dollar opportunity.* NMAB-437. Washington: National Academy Press.

National Research Council. Strategic Highway Research Program. 1990. *Carbon fiber reinforced concrete. Contract no. SHRP-87-ID012: Quarterly progress report.* Washington: SHRP, National Research Council.

National Research Council. Strategic Highway Research Program. 1991. *Product alert.* SHRP no. 1 (March).

National Slag Association. 1958a. *Blast furnace slag concrete.* NSA 168-5. Alexandria, Va.: National Slag Association.

National Slag Association. 1958b. *Cost of sawing concrete pavement joints as affected by types of aggregates.* NSA 158-3. Alexandria, Va.: National Slag Association.

Nomachi, H., M. Takada, K. Harada, and C. Rajkumar. 1989. Performance of commercial blended cements in alleviating ASR. In *8th international conference on alkali-aggregate reaction: Proceedings,* July:211–16. Kyoto, Japan.

Ohama, Y. 1984. Polymer-modified mortar and concrete. In *Concrete admixtures handbook: Properties, science, and technology,* ed. V. S. Ramachandran, 337–439. Park Ridge, N.J.: Noyes Publications.

Olek, J., P. J. Tikalsky, and R. L. Carrasquillo. 1986. *Production of concrete containing fly ash for pavement applications.* Research report 364-2 (May). Austin: University of Texas Center for Transportation Research.

Olek, J., P. J. Tikalsky, and R. L. Carrasquillo. 1986. *Production of concrete containing fly ash for pavement application.* Report no. 3-9-84-364-2 (May). Austin: University of Texas Center for Transportation Research.

Osborne, G. J., and M. A. Smith. 1974. Exploratory studies of regulated-set cements. *Cement Technology* 5 (3):335–54.

Ozyildirim, C. 1986. *Investigation of concrete containing condensed silica fume: Final report.* Report no. 86-R25 (January). Charlottesville: Virginia Highway & Transportation Research Council.

Paxton, J. T. 1982. Ohio aggregate and concrete testing to determine d-cracking susceptibility. *Transportation Research Record* 853:20–24.

Pfeifer, D. W., and M. J. Scali. 1981. *Concrete sealers for protection of bridge structures.* NCHRP 244. Washington: Transportation Research Board, National Research Council.

Philleo, R. E. 1986. *Freezing and thawing resistance of high-strength concrete.* NCHRP synthesis 129 (December). Washington: Transportation Research Board, National Research Council.

Pigeon, M., and M. Plante. 1989. Air-void stability part I: Influence of silica fume and other parameters. *ACI Journal* 86 (5):482–90.

Pigeon, M., P. C. Aitcin, and P. LaPlante. 1987. Comparative study of the air-void stability in a normal and a condensed silica fume field concrete. *ACI Journal* 84 (3):194–99 (May-June).

Plante, P., and A. Bilodeau. 1989. Rapid chloride ion permeability test: Data on concretes incorporating supplementary cementing materials. In *ACI special publication SP-114.* Vol. 1, *Fly ash, silica fume, slag and natural pozzolans in concrete*, ed. V. M. Malhotra, 625–44. Detroit: American Concrete Institute.

Polivka, M., and A. Klein. 1960. Effect of water-reducing admixtures and set-retarding admixtures as influences by cement composition. In *Symposium on effect of water-reducing admixtures and set-retarding admixtures on properties of concrete.* STP-266, 124–39. Philadelphia: American Society for Testing Materials.

Pomeroy, D. 1989. Concrete durability: From basic research to practical reality. *ACI special publication: Concrete durability* SP-100:111–31.

Popoff, N. J. 1991. Blended cements. In *Concrete construction: A vision for the nineties. Concrete technology seminar MSU-CTS no. 5 (February),* eds. P. Soroushian and S. Ravanbakhsh, 2.1–2.16. East Lansing: Michigan State University.

Popovics, S. 1979. *Concrete-making materials.* McGraw-Hill Book Co.

Popovics, S. 1985. Improved utilization of fly ash in concrete through a chloride-free accelerator. *Cement, Concrete, and Aggregates* 7 (1):49–51.

Popovics, S., N. Rajendran, and M. Penko. 1987. Rapid hardening cements for repair of concrete. *ACI Materials Journal* 84 (1):64–73.

Portland Cement Association. 1987. Concrete in highway transportation. *Portland Cement Association,* no. 1 (July).

Powers, T. C., L. E. Copeland, J. C. Hayes, and H. M. Mann. 1954. Permeability of portland cement paste. *ACI Journal Proceedings* 51 (3):285–98.

Previte, R. 1977. Concrete slump loss. *ACI Journal Proceedings* 74 (8):361–67.

Price, W. H. 1978. Grading. Chap. 34 in ASTM STP 169B: *Significance of tests and properties of concrete and concrete-making materials.*

Ramachandran, V. S. 1976. *Calcium chloride in concrete: Science and technology.* Essex, England: Applied Science Publishers.

Ramachandran, V. S. 1984. Accelerators. In *Concrete admixtures handbook: Properties, science, and technology*, ed. V. S. Ramachandran. Park Ridge, N.J.: Noyes Publications.

Ramachandran, V. S., and R. F. Feldman. 1984. Cement science. In *Concrete admixtures handbook: Properties, science, and technology*, ed. V. Ramachandran, 1–54. Park Ridge, N.J.: Noyes Publications.

Ramachandran, V. S., and V. M. Malhotra. 984. Superplasticizers. In *Concrete admixtures handbook: Properties, science, and technology*, ed. V. S. Ramachandran, 211–68. Park Ridge, N.J.: Noyes Publications.

Ramakrishnan, V., W. Coyle, V. Kulandaisamy, and E. Schrader. 1981. Performance characteristics of fiber reinforced concrete with low fiber contents. *ACI Journal* 78 (5):388–94.

Ramakrishnan, V., G. Y. Wu, and G. Hosalli. 1989a. Flexural behavior and toughness of fiber reinforced concrete. *Transportation Research Record* 1226:69–77.

Ramakrishnan, V., G. Y. Wu, and G. Hosalli. 1989b. Flexural fatigue strength endurance limit and impact strength of fiber reinforced concrete. *Transportation Research Record* 1226:17–24.

Rapid-setting materials for patching of concrete. 1977. NCHRP 45. Washington: Transportation Research Board.

Ratinov, V. B., and T. I. Rozenberg. 1984. Antifreezing admixtures. In *Concrete admixtures handbook: Properties, science, and technology*, ed. V. S. Ramachandran, 430–79. Park Ridge, N.J.: Noyes Publications.

Rice, J. L. 1972. Pavement design considerations. In *Fibrous concrete—Construction materials for the seventies. Conference proceedings, M-28 (December)*, 159–76. Charapaign, Ill.: Army Construction Engineering Research Lab.

RILEM. 1988. Siliceous by-products for use in concrete. Final report: 73-SBC RILEM Committee. *Materials and Structures* 21 (121):69–80.

Rixom, M. R., and N. P. Mailvaganam. 1986. *Chemical admixtures for concrete.* Cambridge, England: The University Press.

Rose, J. 1987. The effect of cementitious blast-furnace slag on chloride permeability of concrete. In *ACI special publication SP-102: Corrosion, concrete and chlorides*, ed. F. W. Gibson, 107–25. Detroit: American Concrete Institute.

Ruettgers, A., E. N. Vidal, and S. P. Wing. 1935. An investigation of the permeability of mass concrete with particular reference to Boulder Dam. *ACI Journal Proceedings* 31:382–416.

Schrader, E. K. 1985. Fiber reinforced concrete pavements and slabs: A state-of-the-art report. In *Steel fiber concrete seminar (June): Proceedings,* ed. S. P. Shah and A. Skarendahl, 109–32. Elsevier Applied Science Publishers.

Shilstone, J. 1990. Concrete mixture optimization. *Concrete International: Design and Construction* 12 (6):33–39 (June).

Shu, T. M., Y. Y. Feng, Y. Mei-qi, and Z. Shi-hua. 1983. The preventive effect of mineral admixtures on alkali-silica reaction and its mechanism. *Cement and Concrete Research* 13:171–76.

Siebel, E. 1989. Air-void characteristics and freezing and thawing resistance of superplasticized air-entrained concrete. In *ACI SP-119: Superplasticizers and other chemical admixtures in concrete,* ed. V. M. Malhotra, 297–319. Detroit: American Concrete Institute.

Smith, K. G., D. W. Fowler, and A. H. Meyer. 1984. *Laboratory and field evaluation of rapid setting materials used for repair of concrete pavements.* Research report no. 311-14 (July). Austin: University of Texas Center for Transportation Research.

Smith, M. D. 1986. *Silane chemical protection of bridge decks: Final report.* Report no. FHWA/OK 86 (December). Oklahoma Department of Transportation.

Smith, R. L., and C. F. Raba. 1985. Recent developments in the use of fly ash to reduce alkali-aggregate reaction. In *ASTM special technical publication 930: Alkalis in concrete,* 58–69.

Soroushian, P. 1990. Durability characteristics of fly ash concrete. In *Recent advances in concrete technology seminar, MSU-CTS 4 (February),* 6.1–6.18. East Lansing: Michigan State University.

Soroushian, P., and Z. Bayasi. 1967. Concept of fiber reinforced concrete. In *Fiber reinforced concrete symposium (February),* 1.1–1.16. East Lansing: Michigan State University.

Standard specification for portland cement (AASHTO M 85-89). 1986. *AASHTO standard specification for transportation materials.* Part I, *Specifications.* 14th ed.

Standard specification for portland cement (ASTM C 150-86). *1990 annual book of ASTM standards* 4.02:89–93.

Standard test methods for potential alkali-reactivity of carbonate rocks for concrete aggregates (rock cylinder method) (ASTM C 586-69, reapproved 1986). *1990 annual book of ASTM standards* 4.02:282–85.

Standard test method for potential reactivity of aggregates (chemical method) (ASTM C 289-87). *1990 annual book of ASTM standards* 4.02:159–65.

Stanton, T. E. 1940. Expansion of concrete through reaction between cement and aggregates. *ASCE Proceedings* 66:1781–1812.

Stark, D. 1976. Characteristics and utilization of coarse aggregates. In *ASTM special technical publication 597: Living with marginal aggregates,* 45–57.

Stark, D. 1978. Alkali-silica reactivity in the Rocky Mountain region. In *Proceedings of the 4th international conference on the effect of alkalies in cement and concrete,* Purdue University (June).

Swamy, R. N., and M. M. Al-Asali. 1989. Effectiveness of mineral admixtures in controlling ASR expansion. In *8th international conference on alkali-aggregate reaction: Proceedings,* July:205–10. Kyoto, Japan.

Tatnall, P. C. 1990. Durability characteristics of steel fiber reinforced concrete. In *MSU-CTS no. 4: Recent advances in concrete technology seminar (February),* 8.1–8.7. East Lansing: Michigan State University.

Taylor, W. F. W., ed. 1964. *The chemistry of cements.* 2 vols. London: Academic Press.

Temple, M., A. H. Meyer, and D. W. Fowler. 1984. *Evaluation of fiber reinforced rapid-setting materials for highway repair.* Research report no. 311-5 (November). Austin: University of Texas Center for Transportation Research.

Temple, M. A., R. D. Ballou, D. W. Fowler and A. H. Meyer. 1984. *Implementation manual for the use of rapid-setting concrete.* Report no. 311-7F (November). Austin: University of Texas Center for Transportation Research.

Tenoutasse, N., and A. M. Marion. 1987. The influence of silica fume in alkali-aggregate reactions. In *Concrete alkali-aggregate reactions,* ed. P. E. Grattan-Bellew, 711–75. Park Ridge, N.J.: Noyes Publications.

Tepordei, V. V. 1990. U.S. construction aggregates. In *ASCE proceedings: Serviceability and durability of construction materials,* ed. B. A. Supernant, 1–9.

The use of penetrating sealers for the protection of concrete highways and structures: Technical report. 1989. Plainview, N.Y.: Fosroc-Preco.

Traylor, M. L. 1982. Efforts to eliminate d-cracking in Illinois. *Transportation Research Record* 853:9–14.

Tsuji, Y., and N. Miyake. 1988. Chemically prestressed precast concrete box culverts. *Concrete International: Design and Construction* 10 (5):76–82 (May).

U.S. Department of the Interior. Bureau of Mines. 1989. *Cement mineral yearbook.* Washington: GPO.

U.S. Department of Transportation. Federal Highway Administration. 1990. *Portland cement concrete materials manual.* Report no. FHWA-Ed-89-006 (August). Washington: FHWA.

UCA. 1974. *Quality concrete with crushed stone aggregate.* Washington: National Crushed Stone Association.

Uchikawa, H., and K. Kohno. 1983. Ultra-rapid hardening cement (Jet cement). *Concrete Technology and Design* 1:70–136.

Van Aardt, J. H. P., T. M. Nemeth, and S. Visser. 1982. *High alumina cement concrete.* Pretoria, South Africa: National Building Research Institute. Available from NTIS, Springfield, Va. (CSIR-RR-573).

Verbeck, G. J. 1968. Field and laboratory studies of the sulfate resistance of concrete. In *Performance of concrete resistance of concrete to sulfate and other environmental conditions: Thorvaldson symposium*, 113–24. Toronto: University of Toronto Press.

Verbeck, G. J., and C. Gramlich. 1955. Osmotic studies and hypothesis concerning alkali-aggregate reaction. *ASTM Proceedings* 55:1110–28.

Virtanen, J. 1983. Freeze-thaw resistance of concrete containing blast-furnace slag, fly ash or condensed silica fume. In *ACI special publication SP-79: The use of fly ash, silica fume, slag and other mineral by-products in concrete,* ed. V. M. Malhotra, 923–42. Detroit: American Concrete Institute.

Volger, R. H., and G. H. Grove. 1989. Freeze-thaw testing of coarse aggregate in concrete: Procedures used by Michigan Department of Transportation and other agencies. *Cement, Concrete, and Aggregates* 11 (1):57–66.

Wallace, M. 1985. Flowing concrete produced at the batch plant. *Concrete Construction* 30 (4):337–43.

Walter, D. G. 1987. What are latexes? *Concrete International: Design and Construction* 9 (12):44–47 (December).

Weisburd, S. 1988. Researchers are paving the way for innovative cement materials. *Hard Science* 134 (July):24–26.

Whats, whys, and hows of concrete admixtures. 1989. *Better Roads,* April.

Whiting, D. 1981. *Evaluation of super-water reducers for highway application.* FHWA/RD 80/132 (March). Washington: FHWA.

Whiting, D. 1983. *Addendum to NCHRP report 258, Control of air content in concrete: Appendix F, State-of-the-art report (March), NCHRP project no. 10-18.* Washington: Transportation Research Board, National Research Council.

Whiting, D. 1988. Permeability of selected concretes. *ACI special publication: Permeability of concrete* SP-108:195–222.

Whiting, D. 1990. Penetrating sealers for concrete: Survey of highway agencies. *Transportation Research Record* 1284:79–84.

Whiting, D., and W. Dziedzic. 1989. Behavior of cement-reduced and flowing fresh concretes containing conventional water-reducing and second generation high-range water-reducing admixtures. *Cement, Concrete, and Aggregates* 11 (1):30–39.

Whiting, D., and W. Dziedzic. 1990. Effect of second-generation high range water-reducers on durability and other properties of hardened concrete. In *ACI special publication SP-122: Paul Klieger symposium on performance of concrete,* ed. D. Whiting, 81–104. Detroit: American Concrete Institute.

Whiting, D., and L. Kuhlmann. 1987. Curing and chloride permeability. *Concrete International: Design and Construction* 9 (4):18–21 (April).

Whiting, D., and D. Stark. 1983. *Control of air content in concrete.* NCHRP report 258 (May). Washington: Transportation Research Board, National Research Council.

Witczak, M. W., C. W. Lovell, and E. J. Yoder. 1971. A generalized investigation of the potential availability of aggregate by geomorphic units within the conterminous 48 states. *Highway Research Record* 353:25–31.

Wolseifer, J. 1984. Ultra high-strength field placeable concrete with silica fume admixture. *Concrete International: Design and Construction* 6 (4):25–31 (April).

Won, M., K. Hankins, and F. McCullough. 1989. *A twenty-four year performance review of concrete pavement sections made with siliceous and lightweight coarse aggregates.* Report no. FHWA/TX+472-3 (April) Washington: FHWA.

Yamamoto, C., and M. Makita. 1986. Effect of ground granulated furnace slag admixture and granulated or air-cooled blast furnace slag aggregate on alkali-aggregate reactions and their mechanisms. In *Concrete alkali-aggregate reactions,* ed. P. E. Grattan-Bellew, 49–54. Park Ridge, N.J.: Noyes Publications.

Young, J. F. 1972. A review of the mechanisms of set-retardation in portland cement pastes containing organic admixtures. *Cement and Concrete Research* 2:415–33.

3

Current and Projected Concrete Production Technology

Concrete Mix Proportioning Procedures

Concrete mix proportioning (also somewhat erroneously called concrete mix design) is the process whereby proportions of cement, aggregates, water, admixtures, or other components are selected to yield a mix meeting the required engineering properties at the lowest cost. Cost is perhaps the most important consideration, which should, in principle, guide all methods of mix proportioning. If cost were no consideration, then—at least for most highway-oriented applications—there would be only one mixture, this being the strongest and most durable mixture obtainable. In reality, the constraints of both cost and materials availability (which in itself is a cost element) require that optimization methods, which we call concrete mix proportioning methods, be developed and used.

Summary of Current Technology

Current technology for mixture proportioning varies widely within the United States and throughout the world. Many users remain committed to fairly primitive volumetric proportioning methods, in which ratios of cement to fine aggregate to coarse aggregate are stipulated and water is added to bring the concrete to the desired level of workability. State highway agencies have fortunately advanced beyond this embryonic stage—but in many instances, not by much. In most state specification handbooks, concretes are denoted by class, with each class corresponding to a given application. Classes are normally differentiated by strength, reflected in the recommended proportions by limits on minimum cement content, maximum w/c, or both. Table 3.1 shows an example taken from the Construction and Materials Specifications of the Ohio DOT (State of Ohio 1987). Slump, air contents, and aggregate types or gradation are also frequently specified. These prescription procedures, while having the advantage of ensuring uniformity of methods and

Table 3.1. Concrete mix proportions specified by Ohio DOT (quantities per cubic yard)[a].

Class (Using no. 57 size)	Type of coarse aggregate	Fine aggregate (lb)	Coarse aggregate (lb)	Total (lb)	Cement content (lb)	Maximum w/c
C	Gravel	1,160	1,735	2,895	600	0.50
	Limestone	1,285	1,630	2,915	600	0.50
	Slag	1,350	1,360	2,710	600	0.50
F	Gravel	1,270	1,810	3,080	470	0.55
	Limestone	1,345	1,730	3,075	470	0.55
	Slag	1,380	1,470	2,850	470	0.55
S	Gravel	1,125	1,735	2,860	715	0.44
	Limestone	1,260	1,530	2,790	715	0.44
	Slag	1,280	1,370	2,650	715	0.44

[a]Note: 1 kg/m^3 = 1.685 lb/yd^3; 1 kg = 2.2 lb

the resultant concrete, are uneconomical in many cases; they may also result in concretes that are not optimized to meet the various circumstances encountered in handling, placement, and consolidation. Furthermore,the ultimate properties of these concretes may not be as good as those of mixtures obtained from a more rational basis.

Attempts to place mixture proportioning on a scientific footing began with Abrams (1918), who introduced the w/c law and the application of fineness modulus (FM). Basically, the w/c law states that the strength of a given concrete depends primarily on the ratio of water to cement and varies inversely with an increase in the ratio. Feret (1892) had earlier developed a similar relationship for mortars, using a void-to-cement ratio. The FM concept did not attempt to set any particular relationship between FM and ultimate properties; it was simply a means to concisely express aggregate grading by using a number (the FM) computed as one-hundredth of the sum of the cumulative percent (by weight) retained on a standard set of sieves. As Abrams (1918) had demonstrated a relationship between the grading of aggregates and the water needed to produce a workable concrete, FM—by reflecting grading—proved quite useful in this respect.

Beginning in 1944, ACI began to formulate the concepts of Abrams and others into a useable proportioning method. A history of this development is given by Cordon (1974). The current version is issued as ACI 211.1-81 (Standard practice for selecting proportions 1990) (for normal weight aggregates). The procedure uses the following steps to arrive at recommended proportions.

1) Slump, maximum aggregate size, and air content are selected to meet workability, placeability, and durability considerations.

2) The amount of water per cubic yard of concrete is obtained from a table incorporating slump, maximum aggregate size, and air entrainment.

3) The w/c is selected to obtain the desired strength, also keeping in mind durability requirements (i.e., if the w/c needed to obtain strength is greater than that needed to obtain the desired durability, the durability figure should govern the selection). Additionally, methods of treating the use of pozzolans and arriving at a ratio of water to cementitious material are addressed in current versions of 211.

4) From the recommended water content and w/c, cement content can easily be calculated.

5) The amount of coarse aggregate needed is obtained from the nominal maximum size of coarse aggregate and FM of coarse aggregate. This is a reflection of the b/b_o concept, which denotes the amount of dry-rodded, coarse aggregate that can be packed into a volume of concrete (b_o). These amounts can be adjusted according to desired workability.

6) The fine aggregate content is determined by difference, as all other materials have been chosen. This is done by conversion to absolute volume and subtraction from total volume (i.e., 1 yd^3).

Procedures set forth by PCA (Design and control 1979) generally follow the ACI procedure outlined above, except for the use of a trial mix method in which SSD aggregates are added incrementally to a paste of the desired w/c until a mix with the desired workability is achieved. The percent of fine aggregate is then adjusted to obtain minimum cement content at the desired workability. This method is more of an educational tool than a viable proportioning technique.

British (and European) mix proportioning relies more heavily on the effects of aggregate grading on concrete workability and cement content. The method developed at the British Road Research Laboratory (Design of concrete mixes 1950) utilizes the following basic procedure.

1) The w/c is selected on the basis of strength and durability, much as it is in the ACI method, though different values are obtained.

2) The degree of workability for the estimated condition of placement is chosen. Workabilities can be chosen as low, medium, or high.

3) Overall grading curves are selected on the basis of maximum coarse aggregate and grading of available fine aggregates. Fine aggregates are classified into

four zones that basically reflect a finer gradation in progression from Zone 1 to Zone 4.

4) Curves that relate w/c, workability, and grading to ratio of aggregate to cement are supplied. The aggregate-to-cement ratio is then chosen from the appropriate curves.

5) By using cement as a basis for calculation, amounts of all materials are calculated. By knowing specific gravities, weights are converted to volumes, and all quantities are normalized to 1 yd^3.

Application of these two rational methods of mix design for a given set of materials can result in widely different proportions to meet the same goals. The same would be true for other methods promulgated by various agencies and specifying bodies. This has prompted Day (1984) to state that ". . . formal methods of mix proportioning are basically only useful to those with inadequate experience to manage without them. Most of the concrete actually produced has never been formally 'designed' but has arisen from a lengthy process of trial, error, and adjustment." Although this may be an extreme viewpoint, the fact that trial mixtures are strongly recommended as a final check on the formal, ACI, PCA, British, and other methods lends some credence to Day's contention.

New Developments

Developments in the field of concrete mixture proportioning over the past 4 years have been concentrated in the areas of 1) making implementation of the standard procedures easier by development of computer-aided techniques (Jerath and Kabbani 1983; Cannon and Murti 1971; Joseph 1980); 2) accommodating the increased use of fly ash and other pozzolans into mix proportioning to maintain desired properties while deriving economic benefits from the use of these alternative cementitious materials (Olek and Diamond 1989; Hobbs 1988; Butler 1988; Swamy and Bovikni 1990); and 3) developing new theories of mixture proportioning, primarily reflecting greater emphasis on the effects of aggregate grading and characteristics.

The first two cases basically represent incremental (thought important) improvements in established practice and need not be described in detail. The new ideas occurring in these areas, however, are worth reviewing in this report. Day (1984) has suggested a simple system of mixture proportioning apparently based on a large amount of experience and experimentation. By working with combined surface areas of aggregates rather than with FM, water requirements are predicted on the basis of empirical formulae. Various other empirical formulae are used to finalize the design. This is a good example of what might be termed *consultant* methods of mixture proportioning, in which the experience gained by a given consultant over many years of practice is translated into what might be termed a crude *expert system* for development of mix proportions. Hamdani (1982) has suggested a somewhat different approach that is closer to the absolute volume methods, except that a factor accounting for extra mortar needed to supply workability is presented. This factor is empirical and based on experience with a variety of mixtures. Taylor (1986) states that

aggregate surface properties have not been included in any methods currently available, so differences between actual water demand and that estimated from mixture design procedures may relate to particle surface effects.

Perhaps the most intriguing of the new concrete proportioning methods is the system developed by the Shilstones (Shilstone 1990; Shilstone and Shilstone 1987). This is not strictly a mixture proportioning method, but is a means of interpreting mix design submittals to test their applicability to the intended use. Shilstone introduces a coarseness factor, which describes the relative coarseness of all +No. 8 (2.36-mm) sieve particles, as the percent of +No. 8 (2.36-mm) particles that are also retained on the 3/8-inch (9.5-mm) screen. A coarseness factor of 100 would describe a gap-graded mixture, and a factor of 0 would describe a pea-gravel mixture (i.e., one with all aggregate passing the 3/8 inch [9.5-mm] sieve). Obviously, this approach puts great emphasis on the No. 8 (2.36-mm) to 3/8-inch (9.5-mm) particles, which Shilstone claims (with some justification) is a size overlooked in standard ASTM and AASHTO gradation schemes.

Shilstone (1990) also introduced a workability factor, defined as the percent of +No. 200 (75-μm) particles (combined gradation) that pass the No. 8 (2.36-mm) sieve. This workability factor is adjusted for cement content, using 564 pounds/yd^3 (335 kg/m^3) as a reference. For each bag (94 pounds [43 kg]) of cement by which the mixture differs from the reference, 2.5 percentage points are added or subtracted from the workability factor. The relationship between coarseness factor and workability factor is termed the *coarseness chart*. Shilstone (1990) includes a reference bar that denotes an optimal grading relationship on his chart. This band is based on field experience with the factor, and as such is highly empirical; but the band has apparently been used with a good degree of success.

Shilstone's scheme (1990) also introduced a mortar factor, which consists of all material (including cementitious materials) passing the No. 8 (2.36-mm) sieve. The mortar factor is tied to various placement and consolidation procedures. Low mortar factors are more useful for conveyed or drop-bucket mixtures consolidated by heavy vibration. High mortar factors are associated with mixtures pumped or flowed into place. Generally, a lower mortar factor is desirable except when more workability is required (e.g., for pumped or flowing mixes). The mortar fraction in which particles in the No. 8 to 3/8-inch (2.36- to 9.5-mm) fraction are optimized will be lowest. Shilstone (1990) presents certain gradings representative of this ideal.

Considerable advances in aggregate proportioning are being carried out in the SHRP program under contracts C 201 (now completed) and C 206. Andersen and Johansen (1989) have described the application of ternary packing diagrams to minimization of void content in concrete mixtures, the mixture having the highest packing resulting in the lowest yield value and best workability. A set of tables that allows one to determine the optimum packing for a system consisting of as many as three coarse aggregates has been developed. Results of sieve analyses and a simple dry-rodded unit weight determination are the only parameters needed to utilize these packing-based aggregate proportioning tables. Thus, the optimum percentage of each aggregate fraction may be determined. The remainder of the mix can then be proportioned by using standard techniques.

Projected Future Trends

In the near future, the outlook is good for continued computerization of traditional mixture proportioning procedures. Having procedures available in personal computer format will free the mix-proportioning engineer from referring to tabular materials and will allow more rapid generation of potential mixtures. Interactive programs that may then allow the user to input experiences and thus fine-tune the procedures to particular sets of materials will also be developed. An expert system in this area is also in the early stages of development (Celik, Thorpe, and McCaffer 1988).

Beyond the traditional methods, further experimentation will afford a greater understanding of the role of aggregate surface effects in particle interactions. Coupled with powerful size-distribution and rheological models, this will allow more accurate prediction of workability, strength, and durability and allow optimum proportioning to be achieved. Ideally, a researcher would enter the characteristics of all available materials, environmental and loading conditions, and desired service life into such an optimization program. The system would then automatically choose the proper materials and proportioning for the least expensive mixture that would satisfy all input constraints. The best estimate for complete implementation of such an ideal system is within the next 10–15 years. Less ambitious systems, such as those capable of optimizing workability and strength for a fixed number of materials, may be available much sooner.

Materials Storage

Adequate storage must be provided for the plant's rated capacity. The most vulnerable raw material is portland cement, which must be protected from moisture. Bagged cement, used only for smaller projects, needs to be protected from water raining down as well as from water running on the ground or floor. Material stacked on pallets is protected against water in truck beds, during shipment, and against surface flows on storage floors. In general, storage in dry, protected areas with dry floors is recommended (Geary 1978). Large-scale production will involve bulk cement storage. Silos provide excellent weatherproof storage, and telescopic types are available for mobile applications (Zeger 1988). Silos are charged from tankers by compressed air; the air must be dry and oil free, and must be filtered before being discharged back into the environment. Bulk-cement silo interiors should be smooth, with adequate bottom slopes, to promote free flow. Silos can be provided with air diffuser flow pads to allow intermittent introduction of air to loosen packed cement. Silos should be drawn down frequently (approximately once per month) to prevent caking (ACI Comm. 304). Fly ash is also stored in silos. In both cases, long-term storage can lead to retardation of flow due to consolidation (Sturge 1985). Arching may also give problems, and air blasts or mechanical dislodging may be required (Zeger 1988; Sturge 1985). When pneumatic discharge is used, it is possible to operate in a closed loop to prevent consolidation in long-term storage (Zhier and Krocher 1988). Large silos sectored for aggregates and cement have been used, but condensation in the cement sector due to cold aggregate in adjacent sectors can be experienced (Zeger 1988).

Admixtures may be vulnerable to freezing. Many admixtures tend to separate into two phases when they freeze and will require thorough mixing to be restored to uniformity after being thawed. Uniformity can be checked by measuring pH, specific gravity, etc., on samples drawn from different levels. Emulsions, however, cannot be reconstituted (Supernant 1989).

Aggregates constitute the largest share of storage needs. Various stockpile arrangements are possible (Zeger 1988). For instance, in radial storage systems, the number of compartments is determined by the grade of concrete required, and could go to six or more. However, it is also best to keep the angle of repose as large as possible. Dimensions depend on plant capacity and must take into account the material angle of repose, as well as take note of dead space versus active storage. A prepared base will help limit contamination, and an outward grade will help to drain water. The divider or bulkhead walls must naturally be sturdy enough for the loads. Radial systems are used for plants with capacities up to 130 yd^3 (100 m^3) per hour, and storage capacities range from 1,300 to 5,200 yd^3 (1,000–4000 m^3). For winter work, aggregates can be heated by means of steam pipes. Roofing can provide insulation in both hot and cold conditions.

For very large-scale production, 130- to 650-yd^3/hour (100–500 m^3/h) linear stockpiles may serve as the primary storage facility, from where material can be transferred to intermediate storage (such as the silos of tower batchers) for further processing (Zeger 1988). The aggregates are separated into size fractions and stored from the ground up in piles 13,100–131,000 yd^3 (10,000–100,000 m^3) in size. Retrieval is by means of belt conveyors running in tunnels either above or below ground level. Feed gates and vibratory feeders can be used to control flow. In all storage, it is important to prevent segregation. This can be achieved by limiting the height of drop during creation of the stockpile. Where large heights of fall are unavoidable, a rock ladder (a tower with baffle plates) can be used (Zeger 1988). Stockpiles should be built up in layers of uniform thickness; in reclaiming (as with a front-end loader), material is then taken from the edges from bottom to top, each bite thus containing a portion of each layer (Portland Cement Assoc. 1980a). Segregation can be prevented by separating aggregates into more size fractions. Best results are obtained when the ratio of sizes in a fraction does not exceed 4:1 for sizes below 1 inch (25 mm), and 2:1 for larger sizes (ACI Comm. 304 1988).

Batching

Accurate batching of all components is necessary for consistent concrete properties (in both the fresh and hardened states). Such properties include slump and workability, entrained air content, and strength; properties are affected by variations in aggregate gradation, moisture content, batch proportions, admixture dosage, etc. (ACI Comm. 304 1988; Supernant 1989). Quality assurance or quality control procedures performed at the point of aggregate manufacture can limit variations at point of delivery; however, ongoing sampling at the concrete plant will be needed to verify gradation and allow adjustments to be made. Ideally, sampling should be performed as close as feasible to the materials being incorporated into the mix (Portland Cement Assoc. 1980a). Results need to be generated quickly enough to be useful for control, and Forster (1980) has suggested some shortcut

approaches, such as the use of speed drying, gap sieving (i.e., obtaining percentage passing at a size where trouble will occur if it is going to occur), sieving only the coarser sizes (such as those that can be done wet), and using a psyconometer to determine material finer than 200 mesh (75 mm). Such methods were said to have given results comparable with standard tests, but in greatly reduced time. Possible future techniques could include optical array image analysis, vidicon counting and measuring, and optical shadowing. These techniques could be expected to give almost continuous monitoring capability (Forster 1980).

Good quality control of the final concrete requires accurate batching. Cement and aggregates (and dry additives) are weigh batched, whereas liquid components (water and liquid additives) can be batched by weight or by volume. Accuracy requirements are set by various agencies: for example, the National Ready Mixed Concrete Association (1988) allows tolerances of ±2% on individual aggregates and 1% on the cumulative batch. Achieving accuracy is not a trivial exercise. Scales must obviously be inherently accurate (e.g., ±0.1% of capacity, with repair or adjustment required when accuracy degrades to 0.5%), but provision must also be made for compensating for the fact that aggregate hits the scale at speed. This causes initial overreading and a premature closure of feed gates that is somewhat compensated for by the presence of some material still in transit towards the scale. Some additional compensation, in either direction, can be required to bring weights closer to requirements (National Ready Mixed Concrete Assoc. 1988). Batching may be individual or cumulative. Individual batching tends to be more accurate, can be more readily adjusted, and is faster, as operations are carried out in parallel, with each hopper having its own scale. Another advantage is not having to wait for reading oscillations on a single scale to damp between aggregates. The capital cost is usually justified only on very high production projects, such as paving (National Ready Mixed Concrete Assoc. 1988; Zeger 1989). In other cases, cumulative batching is more practical and common. Good gates with good controls are necessary for accuracy. Operation is usually pneumatic, with the advantage of avoiding contamination in the event of operating fluid leaks. Specific operating techniques can be used to improve accuracy—for instance, the application of an oscillating action to the gates near the end of feed makes for precision of control (Zeger 1989), and cement and fly ash may be weighed by charging in two stages (fast and slow) with even finer control being achieved by jogging of the gates. Screw feeders and air slides may be used to batch cement and fly ash (Strehlow 1973).

In achieving specific production rates, batching and batcher discharge times are important factors. Gates and valves are accordingly sized to the flow rates required. The faster the weighing required, the more attention must be paid to material cutoff. In this instance, aggregate is less of a problem than cement because flow rates are more consistent, the actual quantities required are greater, and accuracy tolerances are wider. Two basic systems are in current use: 1) gravity discharge through a clamshell or slide gate into the weighing system; and 2) starting and stopping a belt conveyor that discharges into the weighing system. The belt conveyors can provide a very uniform rate of flow, and midair compensation is very predictable. However, both systems provide the capability of fine adjustment (Strehlow 1973) with satisfactory results.

The batching of liquids by weight can sometimes be kept within tolerance by using only valves, knowing line pressure, valve size, etc. Volumetric batching is achieved by using water meters that usually have a resolution of ±1 gallon (±3.8 L), which must be compared with project needs to determine whether this is sufficiently precise. Meter counting speeds may be a limiting factor, in which case parallel metering may be applied (Strehlow 1973)—but this will degrade precision to some degree.

Automated controls provide great operational flexibility in allowing different mixes to be prepared in any sequence. As an example, one batching plant has six aggregate bins and a computerized system that allows the selection of any defined mix design by selecting and submitting an appropriate card. Once the card has been read, the operation of gates and conveyors is automatically controlled to meter out proper quantities of all components (including compensation of water for aggregate moisture), and a tape that records the batch details (Tatum 1986) is printed out. New developments include the application of expert systems that contain advice and knowledge gleaned from the literature and individual experts. An "interview" conducted between computer and client provides the required inputs, and a decision that can control both batching and mixing is formulated and provided (Celik, Thorpe, and McCaffer 1988).
Accuracy of batching is of no use without reasonably stable consistency of the feed materials, and ongoing and timely information about changes. Materials must accordingly be handled to minimize segregation, and regular samplings are required to verify consistency and characterize changes. Aggregate sampling must be done carefully. Samples may be taken off conveyors or from bin discharges. To ensure representative samples, one recommended approach is to take at least three separate increments and combine them. Sampling from a conveyor requires that a cut across the full width is taken; sampling from a bin requires a cut across the full discharge width once steady-state flow has been established (Portland Cement Assoc. 1980a). The two primary pieces of information required are gradation and moisture content. Knowing the gradation of each component allows individual adjustments to be made to keep the overall gradation within limits; knowing the moisture content in relation to SSD condition allows for compensation of water to maintain the design w/c.

Specification for batching plants may be established by various agencies and manufacturers' associations. The Concrete Plant Manufacturers Bureau, for instance, allows for affixing certification plates to appropriate items meeting their specifications. Part I certification applies to plant and mechanical equipment, such as aggregate bins, cement silos, scales, batches, water meters, and admixture dispersers (solid components are measured by weight only; liquid components are measured by weight or volume). Part II certification applies to plant control systems, such as batching controls (manual, semi-automatic—with or without interlocks—and automatic), and batching recorders (graphic recorders, digital recorders, etc.) (Concrete Plant Manufactuers Bureau 1990).

Volume batching may be used in less-developed countries or for small jobs. Weight-to-volume relationships of cement and fly ash are affected by aeration; weight-to-volume relationships of sands are affected by moisture content (bulking). These can be compensated for to some degree. Mobile batcher/mixer units are available with bins for aggregate and cement, tanks for water, and injection systems for additives to provide

flexibility in manufacturing a variety of concrete mixes as needed. Quantities can vary from a wheelbarrow-load to 60 yd^3 (45 m^3) per hour, with the operator controlling mix proportions. Volume batching accuracy is obtained by using calibrated vane feeders, calibrated gate openings, etc.; water is metered into the mixer section (Mobile batcher mixer 1984).

Future trends may involve greater use of computer controls, made possible by more widespread use of digital measuring equipment (load-cell based, etc.). Although inherent accuracies are no greater, the simplified and more flexible control provided by digital equipment will undoubtedly be a boon. Specific improvements may come from improved moisture sensors (nuclear, resistance, or capacitance type) and the ability to obtain continuous real-time information on gradations of individual feed materials. These will allow for continuous corrections to be applied, which should result in improved uniformity.

Mixing

Concrete used on a construction site can come from a central plant or a site plant. The latter may be necessary because of the remoteness of the site, special mix requirements, or a need to ensure continuity of supply. Capacities for site plants can go as high as 230 yd^3/hour (175 m^3/h), and cement and aggregate storage are scaled accordingly (Site batching and mixing concrete 1989).

Mixers can be characterized as batch or continuous. Batch mixers include pan and paddle types (positive or stirring mixers) and drum mixers, utilizing free-fall effects (Beitzel 1984–86). Pan mixers are of several sorts—stationary pan; free-running pan; co-rotating, power-drive pan; and counter-rotating pan. The mixing elements can be concentric or eccentric; their intensive mixing action, caused by forced action guidance through the mixing elements, makes them suitable across a wide range of concrete consistencies. However, wear tends to be greater in pan mixers than in drum mixers. Paddle mixers are of single- or twin-shaft type. Drum mixers rotate on horizontal or inclined axes. Blades arranged helically at the interior wall act as scoops or lifters to raise the material and let it fall free. The axial effects of rotation and angle of blades enhance mixing (Zeger 1991). Drum mixes are the most economical type, and are classified into three types: tilting drum, reversing drum, and nontilting drum. Continuous mixers, on the other hand, are of the pug or screw type and are usually used for high-volume production of less critical concrete (such as roller-compacted concrete) or cement-treated base (Beitzel 1984–86).

Truck mixers provide another alternative, being able to carry ready-mixed concrete from the plant to the point of need, or to mix in transit. Reversible drums are provided: one direction for mixing or agitation, and one direction for discharge. Central plant mixing may be preferred for greater truck fleet utilization, reduced wear and tear, and fuel savings (National Ready Mixed Concrete Assoc. 1988). Several batching techniques can be used for charging truck mixers. In dry batching, the materials are discharged dry into the truck for transit mixing; in wet batching, the materials are premixed before being discharged into the truck; and in shrink batching, partial mixing is performed in the central plant to reduce volume before materials are discharged into the truck mixer, where mixing will be completed (National Ready Mixed Concrete Assoc. 1988). Shrink mixing is usually carried

out until the water and cement have formed a paste; a rule of thumb states this will occur in about one-half the normal full mixing time (Strehlow 1973).

Adequacy of mixing and mix homogeneity are the important requirements of mixes; the time taken to achieve these is a critical operating parameter. Increasing mixing time has shown that variability decreased down to an asymptote (beyond which time further mixing would make no useful contribution). The time will depend on the mix, the mixer, and the parameter used to assess homogeneity (Johansson 1971). Homogeneity requirements are established by job specifications (e.g., ASTM C94). A number of factors can be involved. In work on truck mixers, the variables studied were batch size, the number of mixing revolutions, the mixing speed, and loading methods. Loading methods were two-stage and ribbon. In two-stage loading, sand, gravel, and water were loaded simultaneously into the rotating mixer, and cement was then charged with the rotation speed slowed (some variants of this included sandwich loading, and withholding one-third of the water, which was added at the delivery end). In ribbon loading, the plant configuration was arranged to blend sand, gravel, and cement on the belt, and water was added to the solids as they fed through a collecting hopper into the truck. Ribbon loading appeared to offer the easiest way to obtain homogeneity, but two-step loading did well as long as care was taken—sandwiching helped, and adding one-third of the water later helped substantially (Bloem and Gaynor 1971). Overall, it appeared that the method of loading has the most important influence on in-batch uniformity and that coarse aggregate should lead in all types of loading (particularly ribbon loading) to prevent head packs—using some coarse aggregate to trail the loading can help clean the mixing fins. Mixing speeds as high as 18–22 rpm in truck mixers appeared beneficial; at higher speeds, however, centrifugal effects may inhibit mixing (Gaynor and Mullarky 1975).

Production times depend on four elements, regardless of mixer type: charging time, mixing time, discharge time, and re-readying time. The charging time involves not only the size of the opening, but also the rate at which the mixer can keep moving material away from the inlet area. Mixing time starts when all solid components have been charged, and ends with the beginning of concrete discharge; 60 seconds is a commonly used rule of thumb for mixing time, but it could range from as few as 30 to as many as 90 seconds or more. A prudent approach is to accept that mixing times will be established by trial, with a good first cut being 1 minute for the first cubic yard, plus 15 seconds for each additional cubic yard (ACI Comm. 304 1988). In truck mixing, on the other hand, it is usual to limit the number of mixing revolutions (70–100 revolutions, for example) at a specified mixing speed; exceeding the specified number can lead to attrition of aggregate, loss of slump, excessive mechanical wear, etc. Thus, if there is likely to be a delay between mixing and discharge, the mixer can be switched to agitation speed before full mixing has been achieved, making it possible to give about 30 revolutions at mixing speed immediately before discharge. Mixer discharge time is taken to be from beginning of discharge until the mixer has emptied. Although operating factors such as rate of opening of discharge doors, size of opening, and blade configuration obviously affect discharge time, the stiffness of the mix itself will also play a role. Pre-readying time includes the time it takes to close discharge doors, reposition chutes, reposition a tilting-type mixer, etc. (Strehlow 1973).

It is advisable to follow the mixer manufacturer's recommendations about operating speed and maximum load; exceeding these parameters will lead to reduced efficiency (Murr 1982).

Future developments in mixing seem likely to be in refining present technology rather than in pursuing new directions. For instance, a twin-fin truck-mounted process mixer that is said to provide homogenous action, enhancing quality and eliminating slump loss, was recently announced. Water is introduced via nozzles running the length of the drum, thus providing even distribution.

Transportation and Delivery

Centrally mixed concrete is carried in agitating or nonagitating trucks (Portland Cement Assoc. 1980b). An important requirement of such units is that they be mortar tight because loss of mortar or paste through seams or other paths will have an obvious deletrious effect on the mix (Panarese 1972). Truck mixers of the revolving drum type provide various options—they can partially or completely mix the concrete during transit, or agitate only. Open-top trucks can be equipped with rotating blades for agitation during haul; both agitating and nonagitating trucks may be specially shaped to facilitate movement of concrete during dumping. Covers may be necessary to retard evaporation in hot, dry conditions. Dump trucks may be either end- or side-dump types (Panarese 1972). High tipping angles are needed for the low-slump concretes that best avoid segregation in transit (Murr 1982).

Methods for transporting concrete on a jobsite after discharge from trucks are numerous and can be selected depending on need. Chutes have rather restricted use because the more modern, stiffer mixes move poorly along them and tend to segregate. Buckets are in widespread use and can have steeply sloping bottoms and large gates that allow them to handle stiff mixes and large aggregates. Pumps are capable of moving large volumes over long distances and considerable vertical lifts (Waddell 1975). Recent pumping capabilities of 170 yd^3 (130 m^3) per hour are quoted; vertical lifts of more than 1,400 feet (426 m) have been achieved (Saucier 1990). For small quantities to be hauled over short distances, wheelbarrows, hand buggies, and self-propelled buggies all have their place (Waddell 1975).

Transportation and delivery methods can be chosen for convenience and efficiency. In one case, three stages were employed: mixing and initial transportation in a ready-mix truck; short haul in an agitating rail car; and pumping for several hundred feet. The total time between mixing and placing was about 1 hour (Saucier 1990).

Truck mixers should be operated in compliance with manufacturers' recommendations. The Truck Mixer Manufacturers Bureau (1989) provides requirements for the various rating plates they issue for affixing to trucks, and the National Ready Mixed Concrete Association (1990) provides information to drivers about recommended procedures, and their responsibilities.

Truck mixers can be equipped with a variety of discharge arrangements other then the normal rear discharge. One possibility is the front discharge, with the advantage of being able to drive straight up to the discharge point without backing in, and for the driver to control chute position, discharge, etc., from the cab (Front-discharge concrete trucks 1984). Recent European developments have resulted in the fitting of concrete pumps and booms to ready-mix trucks; in parts of rural North America, conveyors that may be useful for bridge decks and other jobs that are difficult to access are fitted (Widespread advances 1985).

Time in transit is an important factor and will be subject to specification requirements. One possibility for extending transportation time is to perform dry batching, with delayed introduction of the water. However, there is generally some free moisture in the aggregate, so some of the hydration will nevertheless commence immediately (ACI Comm. 304 1988). In general, it is best to add all the needed water at the plant, but it is sometimes necessary to withhold some for later addition—such as during hot weather. No matter what procedure is followed, it is essential to keep the w/c constant at the design value (ACI Comm. 304 1988) because this is the primary determination of strength and durability.

References

Abrams, D. A. 1918. Design of concrete mixtures. In *Bulletin no. 1: Structural materials research laboratory.* Chicago: Lewis Institute.

ACI Committee 304. 1988. Guide for measuring, mixing, transporting and placing concrete. In *ACI manual of concrete practice.* Part 2. ACI 304R-89. Detroit: American Concrete Institute.

Andersen, P. J., and V. Johansen. 1989. Proportioning of concrete by the use of packing and rheological models. In *Fourth quarterly report to Strategic Highway Research Program (January 13).* Concrete microstructure, C-201. Appendix A.

Beitzel, H. 1984–86. Concrete production plants and mixers. Parts 1–4. *Betonwerh & Zertigteil-Technik.* May (1984); December (1984); October (1985); April (1986).

Bloem, D. L., and R. D. Gaynor. 1971. Factors affecting the homogeneity of ready-mixed concrete. *ACI Journal* 68 (7):521–25.

Butler, W. B. 1988. Economical binder proportioning with cement-replacement materials. *Cement, Concrete, and Aggregates* 10 (1):45–47.

Cannon, J. P., and G. R. K. Murti. 1971. Concrete optimized mix proportioning (COMP). *Cement and Concrete Research* 1:353–66.

Celik, T., A. Thorpe, and R. McCaffer. 1988. Development of an expert system. *Concrete International* 11 (8):37–41 (August).

Concrete Plant Manufacturers Bureau. 1990. *Concrete plant standards.* 9th rev. ed.

Cordon, W. A. 1974. History of concrete proportioning. In *ACI special publication 46: Proportioning concrete mixes,* 167–76.

Day, K. W. 1984. Computer mix design. *Concrete International* September:26–31.

Design and control of concrete mixtures. 1979. Skokie, Ill.: Portland Cement Association.

Design of concrete mixes. 1950. In *Road research note no. 4.* London: Road Research Laboratory.

Feret, R. 1892. On the compaction of hydraulic cement mortars. Annales des Ponts et Chaussee 4 (21), Memoires serie 7e.

Forster, S. W. 1980. *Process Control for Aggregate Production and Use on Public Roads* 44 (2):53–61 (September).

Front-discharge concrete trucks. 1984. *Concrete Construction* January:15–16.

Gaynor, R. D., and J. J. Mullarky. 1975. Mixing concrete in a truck mixer. In *NRMCA publication no. 148.*

Geary, D. C. 1978. Storage of bagged cement. *Concrete Construction* May:284–85.

Hamdani, I. H. 1982. New method for proportioning concrete mix. *Proceedings, Institute of Civil Engineers* 72 (part 1), 355–66 (August).

Hobbs, D. W. 1988. Portland-pulverized fuel ash concretes: Water demand, 28 day strength, mix design and strength development. *Proceedings, Institute of Civil Engineers* 85 (part 2), 317–31.

Jerath, S., and I. A. Kabbani. 1983. Computer-aided concrete mix proportioning. *ACI Journal Proceedings* 80 (4):312–17 (July-August).

Johansson, A. 1971. The relationship between mixing time and type of concrete mixer. *Proceedings of the Swedish Cement and Concrete Research Institute,* no. 42.

Joseph, C. I. 1980. An analytic method of proportioning aggregates for controlled concrete. *Indian Concrete Journal* 54 (2):51–3 (February).

Murr, R. L. 1982. Mixing and transporting concrete. Paper presented at seminar, Transporting, Placing and Curing: How They Affect the Properties of Concrete. Concrete Institute of Australia.

National Ready Mixed Concrete Association. 1988. *Concrete plant operator's manual.* 3d ed.

National Ready Mixed Concrete Association. 1990. *Driver's manual (Ready mixed concrete truck driver's manual).* NRMCA pub. no. 166. Reprint.

Olek, J., and S. Diamond. 1989. Proportioning of constant paste composition fly ash mixes. *ACI Materials Journal* 86 (2):159–66.

Panarese, W. C. 1972. Transporting and handling concrete: Trucks, hoppers and chutes. *Concrete Construction* 17 (8):370–75.

Portland Cement Association. 1980a. *Concrete pavement construction: Inspection at batch plant and mixer.* Rev. ed.

Portland Cement Association. 1980b. *Concrete pavement construction: Inspection at the paving site.* EBO85.01P.

Saucier, K. L. 1990. Placing specialized concretes. *Concrete International* 12 (6):46–50 (June).

Shilstone, J. M., Sr. 1990. Concrete mixture optimization. *Concrete International* June:33–39.

Shilstone, J. M., Sr., and J. M. Shilstone, Jr. 1987. Practical concrete mixture proportioning technology for the See-Mix program. In *See-Mix Jr., Concrete mixture management. User manual.*

Site batching and mixing concrete. 1989. *Journal of the Concrete Society* 23 (9):41–47 (October).

Standard practice for selecting proportions for normal, heavyweight, and mass concrete (ACI 211-1-81, revised 1985). 1990. In *ACI manual of concrete practice.* Part 1, 211.1-1–211.1-34. Detroit: American Concrete Institute.

State of Ohio. Department of Transportation. 1987. *Construction and material specifications.* Section 488.03, 151.

Strehlow, R. W. 1973. *Concrete plant production.* Concrete Plant Manufacturers Bureau.

Sturge, K. 1985. Silo storage of fly ash in power stations and in the cement industry. *Bulk Solids Handling* 5 (5):997–1006.

Supernant, B. A. 1989. Check your admixture after winter storage. *Concrete Construction* March:320–22.

Swamy, R. N., and A. Bovikni. 1990. Some engineering properties of slag concrete as influenced by mix proportioning and curing. *ACI Materials Journal* 87 (3):210–20.

Tatum, R. 1986. Keeping concrete cool: Liquid nitrogen. *The Construction Specifier* December:82–85.

Taylor, M. A. 1986. Concrete mix proportioning by modified fineness modulus method. *Concrete International* December:47–52.

The mobile batcher mixer. 1984. *Concrete Construction* January:5–8.

Truck Mixer Manufacturers Bureau. 1989. *Truck mixer and agitation standards.* 13th rev. ed.

Waddell, J. J. 1975. Handling concrete—Then and now. *ASCE Journal of the Construction Division* 101:819–37.

Widespread advances ease concrete problems. 1985. *World Construction* January:17–20.

Zeger, H. H. 1988. Making concrete from the low-tech to the high-tech standard. *Betonwerh & Zertigteil-Technik,* November 7, 61–65; November 8, 68–76 [Storage of aggs].

Zeger, H. H. 1989. Making concrete from the low-tech to the high-tech standard. *Concrete Precasting Plant and Technology (Betonwerh & Zertigeil-Technik),* no. 1, 62–69.

Zeger, H. H. 1991. Making concrete from the low-tech to the high-tech standard. *Betonwerh & Zertigteil-Technik,* no. 1, 61–69.

Zhier, B., and Z. Krocher. 1988. Modern installation for the storage, handling, and feeding of fly ash at the Ennigeloh Plant of Anneliese Zemtwerk. *Zement-Kalk-Gips,* no. 10 (translation ZKG no. 8/88, 365–70).

4

Current and Projected Highway Construction Practices

Placement of Highway Concrete

Mechanized paving can be performed either with or without forms. These approaches are briefly described as follows (Portland Cement Assoc. 1980):

- **Paving with forms**—usually entails a spreader, a screed finisher, and a float that ride on preset forms. Consolidation is performed by the vibrating screed but can be supplemented by poker vibrators near forms and joint steel assemblies. The accuracy of setting the forms will be reflected in the finished surface. However, care must also be taken to ensure that forms are well secured to a firm base, and that buildup under the wheels is avoided, to reap the benefits of accurate setting. Mechanical spreaders should be loaded correctly to provide the proper roll ahead of the finishing machine, whose traction speed and screed can be adjusted for best results. The final float produces the final elevation and crown.

- **Slipform paving**—uses a paving machine, guided by a stringline, that produces the entire concrete cross-section, consolidated and shaped by extrusion or screeding, using short forms that are part of the machine and keep moving, thus eliminating the need for fixed forms. This requires a concrete mix that provides a stable vertical edge (that may include a keyway) in this fresh condition. Slipforming is a very high-production technology and puts considerable demands on production and delivery. For best final results, it is necessary to maintain as uniform a forward speed as possible and to avoid stopping and starting.

As slipform paving predominates, some additional information and comments are provided. For example, a recent contract in North Carolina is reported to have achieved excellent smoothness in an operation that went as follows (Murr 1989):

Concrete was centrally mixed and delivered by side-dump trucks. The concrete was dumped into a spreader that rough-shaped the concrete and inserted the tiebars. The paving machine that followed maintained a surcharge of about 1 foot above its vibrator bank, and an oscillating screed struck off the concrete before it was extruded under the rear pan at the design thickness. A counter-rotating tube screed (see description of Clary screed in section on finishing, below) raised the mortar and ironed out the surface. Floating was performed with a heavy steel float (4 by 24 feet [1.2 by 7.3m]) partly supported by hydraulic rams. Final finishing was provided by a tube float, burlap drag, and tining.

The spreader described above was an optional feature. It is common to use augers to distribute the dumped concrete to achieve a uniform surcharge across the paver width (Amsler and Bryden 1975). The various zones of the concrete before, during, and after passage through a specific paver are described as follows (Amsler and Bryden 1975):

- Metering: The auger distributor and feed meter (strike-off) measure out a proper head of material across the full width.

- Consolidation: As the paving machine advances, a battery of vibrators enters the metered material and consolidates it.

- Extrusion: Two oscillating extrusion finishers, primary and final, pass over the consolidated concrete and extrude it at the proper shape.

- Finishing: The Clary screed and pan float follow for final finishing.

Charonnat, Augoyard, and Ponsard (1987) describe the state of the concrete as it passes through the various zones as follows: ahead of the vibrators, the material is in a solid, bulked, unstressed state, with very low bearing capacity. In the vibration zone, the material is liquefied and thus readily adopts the form defined by a moldboard (or screed). As the shape is acquired, the material reverts to a solid state, with a high density and a bearing capacity ranging from 10 to 20 psi (70 to 138 kPa), as cement contents vary from 13 to 19%.

As indicated earlier, the slipform paver is guided by wires set at a fixed distance from each edge and at a fixed height above the design edge elevation. Sensors and control devices allow for automatic adjustments to the steering and moldboard (or screed). Over-rapid corrections are undesirable because they will have a deleterious effect on rideability. Although damping would presumably be relatively easy, Charonnat, Augoyard, and Ponsard (1987) describe a paver based on the principle of a screed attached to the paver by long pivoting arms. Hydraulic correction changes the angle of attack and thus the height of the

screed, but the long arms allow gradual changes (this approach appears to be similar to one commonly used on asphalt pavers).

The advantages of the stringline are considerable. The stringline eliminates the need for setting forms but requires reasonable care to avoid disturbance or damage. It is particularly useful in providing visual assurance of the overall smoothness of alignment; individual points that are out of line are easily identified, and adjustments can be eyed in.

Steel in concrete pavements will be required according to the design. Dowel bars at contraction joints are placed either by using preassemblies or by machine. In either case, it is essential that alignment be correct (parallel to both longitudinal and vertical alignment at the location). If preassembly cages are used, they must be firmly fixed to avoid displacement during placing, consolidation, and shaping of the concrete. Automatic dowel bar inserters (DBIs) have been introduced in recent years. The dowels must meet all normal requirements in terms of alignment, bond breaking, etc. The bars are inserted into the fresh, shaped concrete. A typical operation proceeds as follows (Murr 1990):

The DBI is situated behind the pan extruder and places epoxy-coated bars (diameters, 18 by 1 1/4 inches [460 by 31 mm]) to the proper depth along the 1-in-6 skew required (note that although the dowels are distributed along a skew, their individual alignments must be parallel to the line of the pavement). After insertion, the scars are infilled, and a transverse oscillating screed strikes off the excess material.

DBIs have significant advantages in eliminating the labor and effort required by conventional assemblies. By removing the assemblies, access along the alignment is provided to dump trucks, thus eliminating the need for special access roads and side-dump trucks (Guntert 1989). Questions concerning the accuracy of placement arise: Guntert (1989) claims accuracy as an advantage of DBIs. Tayabji and Okamoto (1987) used radar to verify dowel bar locations, and concluded that the current technology gave fair results and that improvements were likely to be developed.

Reinforcing steel placed as welded wire mesh can be placed in three ways (Portland Cement Assoc. 1980): 1) support the steel on chairs before placing the concrete; 2) place the concrete in two courses, sandwiching the steel; or 3) place steel on concrete after laying the full thickness, and push it mechanically to the proper depth.

In the two-course approach, the steel is usually carried on a bridge supported by the first spreader and then placed. The second course is then laid. Care must be taken to avoid cold joints and contamination of the interface. Pushing the steel into the concrete requires a vibrating depressor.

Continuous reinforcement can be placed on chairs ahead of concreting, but care must be taken to avoid disturbance. Mechanization is possible. An ingenious approach is described by Charonnat, Augoyard, and Ponsard (1987): the reinforcement is laid out ahead in a

narrow arrangement that allows access on either side for dump trucks. The bars are threaded in and properly configured by a system between hoppers and screeds. The bars are butt welded ahead of the operation to allow continuity. The paving operation was designed to allow two courses to be constructed almost simultaneously, with the steel sandwiched between them; thus there are two hoppers and two feeds, in a side-by-side arrangement, and two vibrator banks and two screeds in a tandem arrangement. Problems at the interface (cold joints and contamination) are eliminated. The authors point out that different mixes can be placed in the two layers, if desired.

Tiebars are placed to prevent the separation of adjacent lanes and shoulders. Alignment is not especially critical, but placement must be deep enough to avoid interference with saw cutting. Automatic insertion is common within the laid width, whereas manual insertion is usual at edges. Placement in unconsolidated concrete can lead to displacement; rear tiebar insertion is available to mitigate this problem (Guntert 1989).

Some recent developments have been described above. Others either are available or will be. Perhaps the most important development is the zero-clearance paver (ZCP), which has special significance in the present climate that emphasizes rehabilitation and reconstruction over new construction. The ability to confine the paver to a single lane while allowing traffic to flow in adjacent lanes is clearly desirable. Guntert (1989) describes several approaches to achieving this, but points out that true zero infringement is never possible because some room is needed to the sides for followup machines in the paver train and for finishers. One approach, taken by CMI, is to remove one set of crawlers and swing the other set on that side forward. This can be managed only by substantial stiffening of the frame and the use of counterweights. The result is really a one-sided ZCP. Gomaco has used "minimum clearance mules" behind the crawler trucks. In this case, most of the width is slipformed, leaving strips to be filled by concrete fed back through passageways and conveyed by augers to behind the crawler trucks, where the mules slipform and vibrate it. It appears questionable whether the smoothness achieved will be suitable for anything other than city streets.

Improved finishing devices are described by Guntert (1989). Two devices that have recently been introduced are the oscillating connection beam (OCB) and the final finisher (FF). The OCB oscillates across the slab and, because it is held to the same grade as the paver, tends to correct imperfections either left by the main conforming pan or due to dowel bar insertion. The OCB appears to be capable of closing surfaces in stiff mixes that the conventional trailing float pan cannot do completely. The FF is attached to the paver and has a 12-by-156-inch (305-by-3,962-mm) float made of magnesium that travels back and forth across the slab while stroking fore and aft. The FF does an excellent job of closing surfaces and is specified by certain states. It eliminates separate finishing machines and reduces hand finishing.

Telescopic sideforms have been introduced to allow for the irregularity of the old asphalt concrete surface in whitetopping (Guntert 1989).

Computerization has been introduced here. One paver has three computers: one to control alignment and profile based on stringline sensors, one to control the DBI, and one to control the pan and screed in transition curves (among other functions) (Murr 1990). Guntert (1989) notes the advantages of simpler wiring, greater reliability, and flexibility in changing variables that microprocessors provide. In control, they can provide automation and improved smoothness of transitions and crowning.

In looking toward the future, Marck (1989) sees the need for ZCPs and DBIs with assured accuracy. Knutson (1989), in addition, considers microwave curing within 30 feet (9 m) of the paver, one-shot sawing and sealing (perhaps using laser cutting), and laser guidance to replace stringlines. However, Guntert (1989) cautions that laser guidance may be impractical for vertical and horizontal curves and that there would be, in any case, a loss of the visual reassurance and ease of adjustment provided by the stringline.

Consolidation of Concrete

Consolidation Process

Consolidation is the purposeful action taken to remove entrapped air from a freshly placed hydraulic cement mixture. Rapid vibration temporarily liquefies the mixture, causing subsidence. Entrapped air rises through the mixture and escapes at the surface. Initial slumping and densification involve getting most of the coarse aggregate to its lowest position; at this stage, most of the large air voids and associated risk of honeycombing are eliminated. In later stages, air is expelled from the mortar itself (Winn, Olsen, and Ledbetter 1984). The larger air bubbles are apparently more readily expelled than the smaller bubbles; air entrainment is thus not substantially affected, although it can be under certain conditions (Stark 1986).

Benefits of Consolidation

A number of benefits result from consolidating concrete to increase density, among them the following (Whiting, Seegebrecht, and Tayabji 1987; Olsen 1987): the number of undesirable air voids is reduced; mixes with lower water contents are made practical; permeability is reduced; bonding to reinforcing steel is increased; and drying shrinkage is reduced.

Quantification of some of these effects is available (Whiting, Seegebrecht, and Tayabji 1987; Tayabji and Whiting 1987). The compressive strength drops about 30% for each 5% reduction in consolidation, with higher-cement-content mixes being somewhat more sensitive to this effect. (It is of interest to note that aggregate type and air content have little influence on this observed pattern.) Bond strength drops 50% for each 5% reduction

in consolidation. As the degree of consolidation decreases, especially below 96%, the permeability to chloride ions increases and has an inevitable effect on corrosion. Freeze-thaw resistance is minimally affected. However, Stark (1986) indicates that improper use of vibration during consolidation can have a deleterious effect on freeze-thaw resistance and offers rather compelling evidence from field and laboratory studies. In the field, freeze-thaw deterioration has occasionally been directly in the paths of the vibrators mounted on the paver. In laboratory tests, fresh concrete specimens were vibrated for a fixed time. using various frequencies, in a bucket; the material was then rodded into prism molds. Freeze-thaw tests and linear traverse measurements were conducted on the prisms. In most cases it was noted that freeze-thaw resistance was reduced—for the higher w/c's more than for the lower, and for the higher vibration frequencies more than for the lower. While the air-void system was adversely affected, leading to lowered freeze-thaw resistance, it should be noted that very heavy vibration was applied in the laboratory (using a vibrator with a 1-3/8-inch [35-mm] diameter and an amplitude of 0.035 inches [0.9 mm], for 20 seconds in a 1/4-ft^3 [.007-m3] bucket, followed by rodding into the molds; frequencies of 0 [control], 8,000, 11,000, and 14,000 vibrations per minute were used).

Equipment

Vibration is the most important method available for consolidation of concrete (Deno 1985). As Weden (1987) points out, the selection of specific equipment will depend on the quantities of concrete involved, and on the power sources available. Electric, pneumatic, and hydraulic equipment are available; where adequate power is otherwise unavailable, self-powered gasoline air diesel plants can be used.

There are two forms of vibrators: internal and external. A basic description of these types follows (Weden 1987).

Internal (poker or spud) vibrators are familiar cylindrical devices that have a shaft with an eccentric weight, mounted in the head. Rotation of the shaft causes the head to wobble in an orbital fashion. No-load speeds are about 20,000 vpm, falling to 10,000–11,000 vpm under load. The drive motor may be mounted in the head, or may be some distance away, using a flexible-shaft drive. On paving machines, the hydraulic system is often a convenient source of power.

External (e.g., the vibrating screed) vibrators typically consist of a beam with vibration mechanisms attached. Another form of external vibration is possible in RCC—in this case, the fresh mix is so dry and stable that compaction is performed with vibratory rollers (Murr 1989). So far, RCC has found its major paving application in heavy-duty facilities such as intermodal yards and logging roads, where rideability is a secondary consideration.

Paving machines typically combine both forms of vibration (Murr 1989; Tamping beam to slip-form 1978). The internal vibration provides the major part of the consolidation, while

a pan vibrator, for instance, may be used to provide a trued surface and some further consolidation.

Effectiveness of Equipment

An important study of consolidation of continuously reinforced concrete pavement (CRCP) was described by Winn, Olsen, and Ledbetter (1984). The work is summarized well by Olsen (1987). In looking at the results, it should be remembered that CRCP has reinforcement at mid-depth, which limits the placement of vibrators. This is also the case for dowel bar preassemblies, even in unreinforced pavement, although not for automatic dowel bar insertion. The findings may thus be directly applicable in many instances, and can be applied—with care—to others.

In choosing an internal vibrator, considerations are head diameter, frequency, and amplitude. In operation, additional variables are method of mounting, depth, and spacing.

Vibrator spacing is a function of the radius of action, which is determined by head diameter, frequency, acceleration, type of reinforcement present, time of vibration (related to paver speed), and the degree of consolidation required. The radius of action is the distance up to which the concrete can be adequately consolidated while the vibrator is within range. In paving, where banks of vibrators are used, vibrator interaction must be considered. In this regard, the literature does not appear to consider the effect of phase differences between individual components of the bank. In any event, the most critical case is at the midpoint between vibrators. However, the research indicated little difference in voids for spacings of 12, 18, and 24 inches.

The method of mounting the vibrators may be a factor. As Olsen (1987) points out, vibrators on paving machines are usually mounted parallel to the direction of travel, but sometimes they are placed perpendicular to that direction. If they are placed perpendicularly, it should be remembered that there is no vibration effect along the line of the vibrator and that the vibrators should be mounted in an unbroken line (an overlapping arrangement would actually be preferred) to ensure overall consolidation. This arrangement may also be more susceptible to variations in paver speed.

The aggregate may affect consolidation. For best stability, coarse aggregate should be in shoulder-to-shoulder contact, with the voids filled by ever decreasing aggregate sizes. Olsen (1987) states that high voids are inevitable when fines are inadequate, regardless of the degree of consolidation effort; whereas an excess of fines requires considerable effort to eliminate air, and segregation may result. A reduction of coarse aggregate maximum size (i.e., from 2 1/2 inches [63 mm] to 1 1/2 inches [37.5 mm]) will ease consolidation.

Finishing of Concrete

Introduction

Finishing of pavement slabs is commenced after the slabs are placed and consolidated. In the case of slipform paving, most of the work is done by the paving machine, leaving little to be done by hand apart from the touching up of imperfections. Slab finishing consists of the following operations (Hill 1989):

- Consolidation
- Screeding
- Bull floating
- Waiting for bleeding to end and surface sheen to disappear
- Jointing and edging
- Floating
- Trowelling
- Additional trowelling (for heavy-duty floors)
- Texturing
- Curing

In this report, consolidation and curing are considered in separate sections.

Kosmatka and Panarese (1990) provide useful short descriptions of these operations:

- Screeding is the striking off process, bringing the top surface of a slab to a proper grade and elevation (vibratory screeds also contribute to consolidation).
- Bullfloating (or darbying) eliminates high and low spots, the long-handled bullfloat allowing large areas to be covered from off the slab.

- Edging and jointing—where concrete has been cast against forms, an edging tool is used to densify the concrete at the edges, where floating and trowelling are less effective. Jointing consists of making grooves or inserting preformed joint materials in the unhardened concrete to control shrinkage cracking. Joint sawing on hardened concrete pavements is done for the same reason.

- Floating attempts to accomplish three objectives: to embed aggregate particles just beneath the surface, to remove remaining imperfections, and to compact the surface mortar preparatory to additional operations. Overworking with the float will bring an excess of fines and mortar to the surface, and is to be avoided.

- Trowelling with a steel tool can provide a smooth, hard, dense surface and is done after floating.

- Texturing provides skid resistance and is done before the concrete has thoroughly hardened.

If machine work in a paving operation is well controlled, there will be little need for hand work, which will consist of cutting down occasional high spots, closing the surface where necessary, removing marks and laitance, and edging as specified (Portland Cement Assoc. 1980). Because the finishing that can be accomplished during laydown is discussed in the section above on placing, only those aspects such as handwork, texturing, and joint sawing will be described below.

Handwork

In hand-finished surfaces it is emphasized that after initial screeding, further operations must wait until surface water sheen has disappeared, lest water be worked in and cause subsequent checking and crazing. Laitance remaining after the water has disappeared should be floated back into the surface, and any remainder should be scraped off before trowelling to avoid surface checking and dusting. Partial removal of surface water by dragging a hose or burlap is considered acceptable to accelerate the process. In very dry conditions, surface cracking that develops as a result of rapid evaporation should be closed by reworking with a float, but is better prevented if possible. Steel trowelling should be delayed until the surface can no longer be dented by the thumb, to avoid bringing excess fines to the surface (Mahaffey 1982). A 10-foot (3-m) scraping straightedge can take care of minor irregularities and laitance, and long-handled floats with blades at least 5 feet (1.5 m) long can be used for smoothing and filling in open textured spots (Portland Cement Assoc. 1980). Tube floats on a self-propelled rig behind a slipform paver may be used to iron out bumps and tears, but are prohibited by some agencies (Portland Cement Assoc. 1980). In a careful study on the use of the Clary screed and tube float, it was found that the tube float caused substantial reductions (10% to more than 20%) in mortar strength towards the surface, while providing little improvement in rideability (Amsler and Bryden 1975). In using the tube float, a good deal of water is sprayed, no doubt accounting for the mortar strength declines. The Clary screed is a tube (diameter, 8 inches [203 mm]) that rotates at about 100 rpm in a direction opposite to the forward motion. A small amount of water may be introduced; however, surface mortar strengths tended to be lower by a modest amount (about 5%), and some improvement in rideability was noted (presumably due to smoothing of small inconsistencies).

The addition of water during finishing should be avoided, except when necessary because of extremely rapid drying conditions; in such cases, a careful fogging can be resorted to (Portland Cement Assoc. 1980).

Texturing

For improved braking and cornering friction, pavements are commonly textured. Although burlap drags and brooming were previously used, grooving of airfield pavements was introduced into the United Kingdom in 1956; in the United States, CALTRANS started sawing grooves in the 1960s. Grooving can be longitudinal or transverse. Longitudinal grooves improve cornering friction significantly, whereas transverse grooving mainly increases the braking friction and also tends to help prevent hydroplaning. Safety benefits significantly, especially in wet, snowy, or icy conditions. There are also improvements in reduction of water spray and headlight glare (ACI Comm. 325 1988).

Texturing can be produced in several ways, depending on user needs (requirements for high versus low speed, for example). For texturing fresh concrete, ACI Committee 325 (1988) lists the following:

1) Texture produced by an artificial turf drag (weighted if deeper texture required).

2) Transverse tining, which usually follows a burlap or turf drag. The tines are spring steel (1/8 inch [3 mm] wide) spaced 1/2–1 inch (12–25 mm) apart (closer spacing may cause ravelling). The operation is such that the tines will penetrate a depth of 1/8–1/4 inch (3–6 mm). It is important that the tining bar (which contains numerous tines) is pulled across in a single pass and that successive passes do not overlap, to avoid weak, frangible mortar ridges (this also explains why the tining should avoid the immediate vicinity of sawed joint locations); care should be taken to lift the tining bar just before reaching the far edge, to avoid damage (Portland Cement Assoc. 1980).

3) Longitudinal tining requires a continuous pull on the tine bar, but is otherwise similar to transverse tining.

4) Transverse broom texture is produced by a mechanically operated broom that gives striations about 1/16–1/8 inch (1.5–3 mm) in depth, spaced about the same distance apart.

5) Longitudinal broom texture is similar to the transverse variety except for the direction of drag.

6) Transverse tine and longitudinal artificial turf texture is recommended for high-speed roads or for areas in which sudden stopping and starting can be anticipated. The drag precedes the tining.

Considering the numbered paragraphs above, the textures (in descending order of braking friction) are 6, 2, 4, 1, 3, and 5.

Timing is critically important in getting the proper texture. Accordingly, ACI Committee 325 (1988) recommends confining the texturing operation to a separate piece of equipment, so that its operation is independent of all others and texturing can be done when the plasticity of the fresh concrete is right. Steel tining is almost universally accepted in the United States, and is often the only method allowed for final finish. Most states prefer transverse tining, but two or three states prefer longitudinal tining. A fair number of states permit a burlap drag, but often only as a precursor to tining. Brooming has few adherents (Portland Cement Assoc. A charted summary).

Texturing of hardened concrete is done by means of diamond grinding and/or grooving, sandblasting, waterblasting, or chemical treatment. According to ACI committee 325 (1988), sawed transverse grooves work best, and should not be less than 1/8 inch (3 mm) wide or more than 1/4 inch (6 mm) deep, and should be spaced 1/2–1 inch (12–25 mm) apart. Although transverse grooving is preferred for operational purposes, longitudinal grooving can be cut without closing more than one lane of traffic at a time.

The effectiveness of texturing may be assessed by various skid resistance tests (ASTM E274, E303, or E670). Measurements of texture by means of sand patch tests provide less satisfactory correlations (ACI Comm. 325 1988).

Joint Construction

The following provides a useful summary of joint types and their construction (Portland Cement Assoc. 1980).

- Sawed joints are cut with a diamond-impregnated cutting wheel. The following are critical points in transverse joint sawing:

  timing—cut before uncontrolled cracking has occurred, but delay long enough to avoid spalling or tearing

  location—especially critical with dowelled joints

  dimension—cut to proper depth (one-fourth to one-third of slab thickness) and width, and to appropriate section (if stepped blade used)

  Timing is highly dependent on the condition of the concrete. Because of varying ambient temperature and other conditions at time of placement and after, a straightforward sequencing may not be best. If sawing is left too late, uncontrolled shrinkage cracks will develop. At the correct time, ACI Committee 325 (1988) points out that a small amount of ravelling will occur; if it does not, it is a sign that sawing was too late. Timing is less critical for longitudinal joints, but these joints should be formed before trafficking starts.

Productivity is increased by mounting multiple saws on a single frame; in one example, four cuts are put in simultaneously at the design intervals of 18, 19, 21, and 22 feet (5.5, 5.8, 6.4, and 6.7 mm) (Murr 1989).

- Insert joints are formed by inserting strips of premolded material that may subsequently be removed or left in place. A variant, the plastic tape insert, may be used for longitudinal joints.

- Construction joints are deliberately formed as sporadic stopping points in the construction process. Particular attention should be paid to the details.

Future Developments

The basic techniques appear to be well established and not likely to change significantly. Equipment improvements and automated controls are probable developments that will improve productivity. Robotics-related technologies are being pursued, although it is cautioned that construction site conditions are more difficult than typical factory conditions. Development of automatic form vibrators (with sensors to provide feedback control) and finishing robots (operated by remote control) are possible future advances.

Curing of Concrete

Introduction

Once the concrete has been finished, curing is essential for the development of the strength, durability, and other important engineering characteristics latent in the mix. As stated by numerous authorities (Kosmatka and Panarese 1990; ACI Comm. 308 1986; Transportation Research Board 1979; Cook 1982), curing is the maintenance of satisfactory moisture content and temperature in concrete during some definite period immediately following placing and finishing so that the desired properties may develop sufficiently to meet the requirements of service. Hydration of cement requires not only adequate water at the time of placing (invariably present in any normal mix design), but also the maintenance of sufficient moisture for long enough to ensure completion of the process. However, as hydration is a chemical process, there is also the need to maintain the temperature within a suitable range for the time under consideration. In this context, it is important to note that although high temperatures accelerate hydration, slower rates of hydration at moderate temperatures are beneficial for long-term strength (ACI Comm. 308 1986).

Concrete that is properly cured will be markedly superior in strength, impermeability, abrasion resistance, freeze-thaw resistance, etc., to concrete that has been deficiently cured.

Figure 4.1 demonstrates rather dramatically the effect on compressive strength caused by varying the concrete curing period. The hydration reaction will continue until the internal relative humidity has dropped to about 80%, and will cease soon after that point is reached (Kosmatka and Panarese 1990). Although in principle the reaction can be restarted by resaturation, this is hardly practical in the field; in any case, drying may have caused irreversible surface cracking. It is thus extremely important to ensure continuous moist curing until the concrete has achieved the necessary properties.

Pavements present particular curing problems. Their large surface-to-volume ratio (Amsler and Bryden 1975; Hodgkinson 1983) encourages rapid moisture loss and makes them vulnerable 1) to excessive heat gain from solar radiation and 2) to heat loss to the subgrade and air. Special care is therefore needed to ensure that the three elements of curing—time, temperature, and moisture—are provided and maintained.

Enough water to hydrate the cement is generally present at the time of mixing, but the process is not instantaneous. Hydration products can form only in a water-filled space, hence the need for the ongoing presence of water in the cement paste (Transportation Research Board 1979). This explains the observation that hydration will not proceed when the relative humidity in the capillary pores has dropped below about 80%. The loss of strength due to loss of moisture is reversible by resaturation (although surface carbonation is one factor that makes this difficult to achieve in practice) (Cook 1982). However, irreversible damage can be caused. For instance, rapid evaporation at the surface can cause plastic shrinkage cracking—even though sufficient water is available in the underlying concrete to prevent this, this water may not be able to replenish the lost water quickly enough (Transportation Research Board 1979). In such cases, it may be necessary to supplement normal curing techniques (to be described later) with such measures as shading and covering the surface with plastic sheets (or using fog sprays) between placing and finishing (Transportation Research Board 1979).

Summary of Current Technology

Maintenance of moisture and temperature for the appropriate duration are the thrust of the various curing methodologies. These issues (moisture, temperature, and time) will be discussed under separate headings below; however, it should be recognized that although a method may be aimed predominantly at one element, it may also address (to a greater or lesser degree) the others.

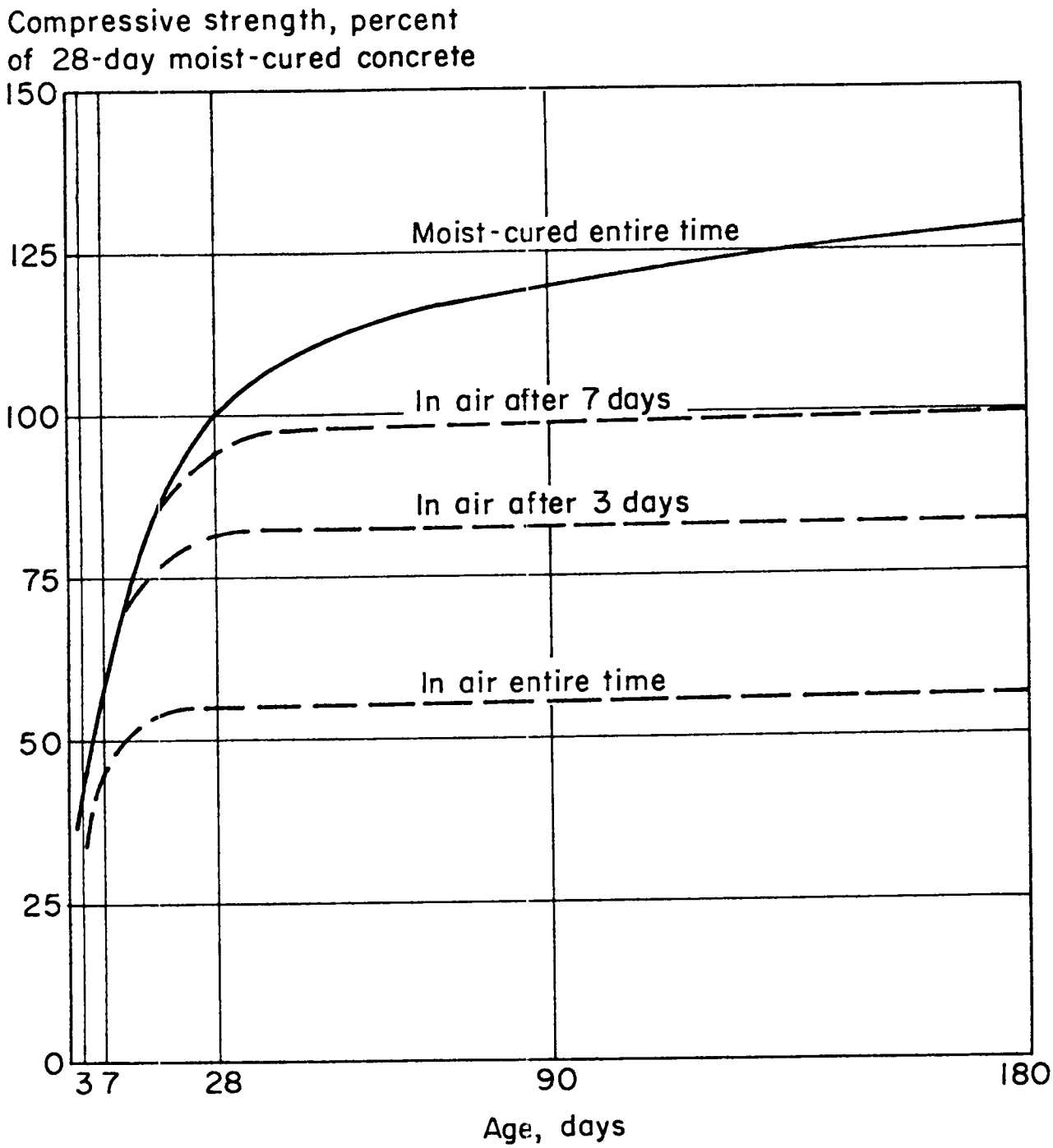

Figure 4.1. Concrete strength increases with age as long as moisture and a favorable temperature are present for hydration of cement (Kosmatka and Panarese 1990).

Moisture Control

Three approaches are taken (ACI Comm. 308 1986; Transportation Research Board 1979).

- Methods that provide a continuous excess of water, thus preventing evaporation and even supplying makeup water if necessary. These include ponding, fog sprays, and covering with wet burlap or other materials.
- Methods that seek to prevent the loss of water from the concrete by sealing the surface with a moisture-proof barrier. These include the use of polyethylene film and sprayed membrane-forming compounds.

- Methods that seek to accelerate the hydration process by providing heat and moisture (e.g., by using steam). These are applicable only to items of limited size, such as structural elements. This specialized topic will not be further discussed.

Ponding and fog spraying are excellent curing methods. They also provide a cooling effect that is useful in some circumstances. Ponding is, however, only possible for flat surfaces, and is highly labor intensive. Fog spraying is more widely usable, but care must be taken to ensure a fog because sprays may cause surface erosion. In addition, continuity of spraying is important to prevent drying-wetting cycles that may cause surface crazing or cracking (Kosmatka and Panarese 1990). There are limitations to their use. Ambient temperatures must be above freezing, and an adequate supply of water must be available. This last requirement may be a problem in dry, hot areas, precisely where curing is most critical.

Covering with wet burlap or other fabric is a well-known method of curing. The cloth must be saturated to start with, and be maintained wet—covering the cloth with polyethylene film can be resorted to. Placement of colors can be done only when the concrete has hardened sufficiently, and care must be taken to enclose edges as well as the upper surface. There is evidently a limit to how large a surface can be economically cured by this method.

For large-scale coverage, such as that necessitated by pavement construction, the use of sprayed liquid membrane-forming curing compounds becomes attractive, especially because the equipment can be included as a component of the paving train. The compound is applied after finishing and surface texturing have been completed. However, these processes can be done only when bleeding has stopped and the surface sheen has disappeared. It is necessary to spray very soon after disappearance of the sheen to prevent absorption of compound into the surface (ACI Comm. 308 1986). However, where very high evaporation rates are experienced, the sheen may disappear before bleeding has stopped; application of membrane at that point can lead to an excess of water concentrating below the surface cement paste, leading to scaling. Another possibility is that continuation of bleeding may lead to map cracking of the membrane, necessitating a reapplication.

Plastic shrinkage cracking due to water leaving the surface much faster than elsewhere may be exacerbated by sealing the subbase (Hill 1989). Pointing to practice in Australia (where rapid evaporation can be a factor), it is stated (Hodgkinson 1983) that to limit plastic shrinkage cracking that might develop if spraying is delayed until sheen and bleed have terminated, there is a growing use of aliphatic alcohol sprays during the 20- to 30-minute window of delay. Similarly, it is recommended that if plastic shrinkage cracking starts, an initial cure with fog spraying, soaked burlap, or spraying with an evaporation retardant should be instituted (ACI Comm. 308 1986). Alternatively, effective measures should be taken to reduce effective temperatures and to shield from wind. These measures are followed by normal curing.

Liquid-membrane curing compounds should comply with the provisions of ASTM C309 and consist of waxes or resins dissolved in solvents of high volatility at atmospheric temperatures (ACI Comm. 308 1986).

ASTM C309 (Standard specification for liquid membrane-forming compounds for curing concrete) recognizes the following types and classes of compounds:

Type 1—clear or translucent, without fugitive dye
Type 1-D—clear or translucent, with fugitive dye
Type 2—white pigmented
Class A—no restriction on vehicle solids material
Class B—vehicle solids restricted to resins

Types 1 and 1-D must be colorless or light in color; if they contain a fugitive dye, the dye should be conspicuous for at least 4 hours and inconspicuous within 7 days if exposed to direct sunlight. The white-pigmented variety (Type 2) has finely divided white pigment that gives visual reassurance of uniformity and completeness of cover, and reduces temperature rise by reflecting solar radiation. The most important requirements are that the compound adhere to freshly placed concrete; form a continuous film when applied at the specified rate; be continuous, flexible, and free of pinholes; and remain intact for at least 7 days. It should not have a deleterious action on cement paste. When tested as specified, moisture loss is required to be less than 1.213 pounds/ft^2 (0.55 kg/m^2) in 72 hours, whereas the Corps of Engineers sets its limit at 0.684 pound/ft^2 (0.31 kg/m^2) (Curing concrete 1973). High moisture retention (typically 0.662 pound/ft^2 [0.3 kg/m^2]) may be achieved by high-solids compounds (Phelan 1989), although higher-than-usual spray rates may be required. An alternative approach to specifying moisture retention is an "efficiency index," whereby a certain percentage of the original water must be retained (Senbetta 1988).

In Australia, curing lean concrete base and PCC pavement is usually done by means of a sprayed chlorinated rubber curing compound (Hodgkinson 1983). In a study of the effects of studded tire wear on pavements in Colorado, it was reported that pavements cured with chlorinated rubber curing compounds and linseed oil showed no improvement over those cured with the low-cost wax or resin compounds in common use (Gerhardt 1977).

In moisture retention tests run by ASTM and Texas State Department of Highways and Public Transportation methods, variability of results within groups (as expressed by coefficient of variation) was rather large, whereas more consistent results were obtained on moisture retention results obtained when treated and untreated specimens cast and cured at the same time were compared (Loeffler et al. 1987). In this connection, it is relevant to note the precision statement, in ASTM C156 (dealing with laboratory determination of efficiency of liquid membrane-forming compounds). ASTM C156 states that results of two separate, properly conducted tests on resin-based, white-pigmented compound by the same operator should not differ by more than 0.816 pounds/ft^2 (0.37 kg/m^2); for two operators in different laboratories, test results should not differ by more than 1.874 pounds/ft^2 (0.85 kg/m^2). Considering that ASTM C309 requires an upper limit of 1.213 pounds/ft^2 (0.55 kg/m^2), these are hardly reassuring tolerances.

The pigment can be expected to settle out to some extent with time; ASTM C309 (Standard specification for liquid membrane-forming compounds for curing concrete) therefore requires that the compound be responsive to redistribution by stirring or by agitation using compressed air. Withdrawing samples from the top, middle, and bottom regions of the drum and comparing the solid content (or visual inspection) can give a good indication of mixing uniformity. This does not necessarily take into account the possibility that some pigment may remain immobilized entirely, and it would seem appropriate that controls be available for comparison (Loeffler et al. 1987). Another technique—measuring specific gravity with a hydrometer—was used successfully; this technique requires comparison with a known standard value.

Application of curing compounds is generally by mechanical equipment that forms part of the paving train, and is to be preferred for both speed and uniformity of application (ACI Comm. 308 1986). The rate of application should be appropriate to specific needs and conditions, but Serbetta (1988) notes that a traditional number is frequently stated (e.g., 200 ft^2/gallon [4.9 m^2/L]) and that this may lead to selection on the basis of price per gallon rather than on the basis of the most economical and effective treatment. Serbetta (1988) also notes that the need for heavier applications caused by texturing is not always recognized. On this topic, ACI Committee 308 (1986) notes that on deeply textured pavement, two full applications may be needed, applying the second after the first has become tacky.

Interesting considerations are whether direction of spraying is important, and whether multiple passes are more effective than single passes. Results of a test program showed that the traditional single transverse pass was at least as good as along-path, mixed, and multiple-pass applications, and that it should therefore be recommended (Loeffler et al. 1987). ACI Committee 308 (1986), however, would prefer splitting the application into two passes, at right angles to each other.

In general, it would appear that uniform applications done at the required rate and in time are the most important factors. Naturally, all surfaces—edges included—must be sprayed.

The loss of moisture to the subgrade should be considered, and can be limited by prewetting (ACI Comm. 308 1986) or sealing.

Temperature Control

The maturity concept is used to predict strength development in concrete, and takes into account both time and temperature. For moist cure, maturity (M) is given by the following equation:

$$M = \Sigma (C + 10) \Delta t$$

where C is temperature in degrees Celsius, and Δt is duration at temperature C.

The relationship implies that all activity ceases below $-10°$ C (ACI Comm. 308 1986). Except in special cases, there is usually a need to protect the concrete against high temperatures.

At elevated temperatures, special care is taken to protect against accelerated water loss in the earlier stages. Problems resulting from evaporation being more rapid than bleeding have already been discussed. While the maturity concept may give the impression that higher temperatures are good without limit, this is not the case. Slower strength gain at moderate temperatures is beneficial for long-term strength (ACI Comm. 308 1986). Indeed, curing temperatures near the service temperatures and uniform temperatures through the mass are preferred. Uniform and moderate temperatures will also protect against thermal stresses and their attendant cracking. The rationale for white-pigmented curing compound, with high reflectivity, is to minimize temperature gain from solar radiation.

Steps may be taken at the stage of manufacture to reduce water loss and to maintain the proper temperature in the concrete, at least in the earlier stages. These steps include using chilled water, or ice as part of the missing water, and cooling the aggregate by shading, water sprays, etc. Guidance on the use of water to cool coarse aggregate is given by Lee (1989). Another technique is the injection of liquid nitrogen into this mix (Tatum 1986). The cooling effect is achieved without affecting the w/c. The possibility of localized freezing appears not to have been considered, however.

Cold-weather curing presents a different set of problems. According to ACI Committee 308 (1986), the concrete should be prevented from freezing before it has reached a compressive strength of 500 psi (3.4 MPa). Furthermore, a non-air-entrained concrete should never be allowed to freeze and thaw in a saturated condition, and air-entrained concrete should be allowed to undergo freeze-thaw cycling only after reaching a compressive strength of 3,500 psi (24 MPa). Special measures may thus be necessary when low temperatures threaten or exist. Heating of the mix components is one method to approach the desirable 55–70° F (13–21° C) range of as-placed mix temperature

(Transportation Research Board 1979). However, aggregate should not be heated above 125° F (50° C), taking care not to drive out the absorbed water; water should not be heated above 180° F (82° C) (and care must be taken to avoid bringing hot water into contact with the cement alone). The Transportation Research Board (1979) goes on to recommend that the minimum temperature of concrete at placement should be 50–55° F (10–13° C), and should not be allowed to drop below that for at least 72 hours. Considerable benefits are derived from cool conditions. ACI 306R-78 states, "Concrete should always be placed at, or near, the lowest allowable temperatures. . . Concrete which is placed at low temperatures above freezing (40–55° F [4–13° C]) and which is not allowed to freeze, and which receives long-time curing develops higher ultimate strength, greater durability, and is less subject to thermal cracking than similar concrete placed at higher temperatures" (Scanlon and Ryan 1989). One caution is that setting times increase by about one-third for each 10° F (5.6° C) reduction in temperature, other things being equal; however, accelerators (such as $CaCl_2$) can be used effectively to counteract this. The danger of freezing, especially early on, is emphasized—concrete in the plastic state will freeze at mix temperatures of about 29° F (−1.7° C), and severe loss of 28-day strength will occur if it freezes in the first 24 hours. Considerable experience has been gained in cold-weather concreting: various sources can be referred to for information on construction practices and what to do (e.g., thermal insulation) in the subsequent protection period (Scanlon and Ryan 1989; Pekar 1988). For example, concrete temperatures must be maintained at not less than 40° F (4° C) for the curing period plus 7 days.

Time of Curing. Time and temperature are interlinked in the maturity concept. Reviewing curing practices in the United States showed that curing periods generally ranged from 3 to 7 days, depending on cement type. The curing period is also sometimes determined by the achievement of a specific strength, or ambient temperature (Serbetta 1988). ACI Committee 308 (1986) recommends that, near ambient temperatures above 40° F, minimum curing duration should be 7 days or the time to achieve 70% of specified strength (flexural or compressive), whichever is shorter. The choice of cement affects the deviation of curing. For Type III cement, deviation of moist cure can drop to 3 days; for Type II, it can rise to 14 days (Kosmatka and Panarese 1990).

Adequacy of Current Technology

It would appear that existing knowledge and technology are adequate to ensure the proper curing of concrete under a wide range of mix and climatic conditions. The most important issue is surely application, which requires ensuring that the relevant people are given the proper information, and that adequate quality assurance and quality control measures are established. One concern, expressed earlier, addresses the problem of determining the water retention properties of curing compounds with sufficient accuracy for meaningful comparisons to be made.

State highway departments incorporate curing methodologies in their specifications. The Portland Cement Association (A charted summary of concrete highway pavement practice in the United States) shows that curing by using membrane-forming compounds, polyethylene film, and wet burlaps are mostly permitted, with specific restrictions that vary from state to state. For instance, compounds may be permitted only between certain dates, the use of film may be permitted only for rain protection, and so on. In the 49 states responding to one survey, white-pigmented Type 2 membrane-forming curing compound is the most commonly used method; almost all states also permit plastic sheet and waterproof paper. On bridge decks, curing with wet burlap is common, although curing compound is apparently more usual (Serbetta 1988).

References

ACI Committee 308. 1986. *Standard practice for curing concrete.* ACI 308-81. Rev. ed.

ACI Committee 325. 1988. Texturing concrete pavements. Committee report 325, 6R-88. *ACI Materials Journal* May–June:202–11.

Amsler, D. E., and J. E. Bryden. 1975. *Effects of the Clary screed and tube float on rigid pavement construction.* Research report 32. New York State Department of Transportation. Engineering Research and Development Bureau.

ASTM C309. *Standard specification for liquid membrane-forming compounds for curing concrete.*

Charonnat, Y., J. P. Augoyard, and L. Ponsard. 1987. A new process for the laying of monolithic composite continually reinforced concrete pavements. *Transportation Research Record* 1110.

Cook, D. J. 1982. Curing: A state-of-the-art review. In *Transporting, placing, and curing: How they affect the properties of concrete.* 136–58. Concrete Institute of Australia.

Curing concrete: Methods and materials. 1973. *Concrete Construction,* updated July.

Deno, D. W. 1985. *Handling, placing and consolidating concrete construction.* October: 847–53.

Gerhardt, B. B. 1977. *Performance of special curing agents and water-reducing agents on concrete pavements in Colorado.* Report no. FHWA-CO-RD-77-3.

Guntert, R. M. 1989. New developments in concrete slipform paving equipment for the 21st century. In *Engineering 21st century highways: Proceedings of conference April 24–26, 1988,* ed. T. A. Hall, 232–46. New York: American Society of Civil Engineers.

Hill, E. D. 1989. Handling, placing, finishing and curing concrete. In *National Ready Mixed Association publication no. 177,* October.

Hodgkinson, J. R. 1983. Contemporary concrete road paving practice in Australia. Paper presented at 11th Biennial Conference, Concrete Institute of Australia.

Knutson, M. J. 1989. Portland cement concrete pavement in the 21st century. In *Engineering 21st century highways: Proceedings of conference April 24–26, 1988,* ed. T. A. Hall, 247–56. New York: American Society of Civil Engineers.

Kosmatka, S. H., and W. C. Panarese. 1990. *Design and control of concrete mixtures.* 13th ed. Portland Cement Association.

Lee, M. 1989. Economical cooling of hot weather concrete. *Concrete Construction* September:791–96.

Loeffler, M. D., C. G. Papaleontion, A. H. Meyer, and D. W. Fowler. 1987. Moisture retention tests and agitation for membrane-forming curing compounds for portland cement concrete. *Transportation Research Record* 1110.

Mahaffey, P. J. 1982. Finishing concrete surfaces. In *Transporting, placing, and curing: How they affect the properties of concrete,* 114–20. Concrete Institute of Australia.

Marck, C. R. 1989. New concrete and asphalt mines on the horizon. In *Engineering 21st century highways: Proceedings of conference April 24–26, 1988,* ed. T. A. Hall, 267–76. New York: American Society of Civil Engineers.

Murr, W. D. 1989. Modified slipformer places smooth-riding slab. *Highway and Heavy Construction* February:29–31.

Murr, W. D. 1990. Multiple on-board computers smooth paving operations. *Highway and Heavy Construction* April:50–51.

Olsen, M. P. J. 1987. Consolidation of continuously reinforced concrete pavement. In *Consolidation of concrete,* ed. S. H. Gebler. SP-96. American Concrete Institute.

Pekar, G. W. 1988. *Concrete International* 10 (10):28–30 (October).

Phelan, W 1989. Q&A. *Concrete Construction* September:819.

Portland Cement Association. 1980. *Concrete pavement construction: Inspection at the paving site.* EBO85.01P.

Portland Cement Association. A charted summary of concrete highway pavement practice in the United States. In *Concrete information series.*

Scanlon, J. M., and R. J. Ryan. 1989. Placing cold weather concrete. *The Construction Specifier* 43 (12):58–65 (December).

Senbetta, E. 1988. Concrete curing practices in the United States. *Concrete International* 11:66–67 (November).

Shrader, E. K. 1987. Compaction of roller compacted concrete. In *Consolidation of concrete,* ed. S. H. Gebler. SP-96. American Concrete Institute.

Stark, D. C. 1986. *Effect of vibration on the air-void system and freeze-thaw durability of concrete.* RD092.01T. Portland Cement Association.

Tamping beam to slip-form. 1978. *New Civil Engineer,* 9 November, 92–93.

Tatum, R. 1986. Keeping concrete cool: Liquid nitrogen. *The Construction Specifier* December:82.

Tayabji, S. D., and P. A. Okamoto. 1987. Field evaluation of dowel placement in concrete pavement. *Transportation Research Record* 1110.

Tayabji, S. D., and D. Whiting. 1987. Field evaluation of concrete pavement consolidation. *Transportation Research Record* 1110.

Transportation Research Board. 1979. *Curing of concrete pavements.* Transportation research circular no. 208 (June). ISSN 0097-8515.

Weden, K. 1987. Mechanical equipment for consolidation of concrete. In *Consolidation of concrete,* ed. S. H. Gebler. SP-96. American Concrete Institute.

Whiting, D., G. W. Seegebrecht, and S. Tayabji. 1987. Effect of degree of consolidation on some important properties of concrete. In *Consolidation of concrete,* ed. S. H. Gebler. SP-96. American Concrete Institute.

Winn, D. P., M. P. J. Olsen, and W. B. Ledbetter. 1984. *Consolidation of concrete pavement.* Research report 341-1F. Texas Transportation Institute.

5

Impact of Developing Technology on Applications Area

Pavement Reconstruction Projects

For badly deteriorated pavements, reconstruction is often the most cost-effective rehabilitation solution. In such cases, there is little chance that repairs will provide a long-term solution, and thick overlays can be more costly due to the extra costs of adjusting shoulders, slopes, bridge clearance, and guardrails. Reconstruction is the rehabilitation strategy of choice for deteriorated pavements with very high traffic volume because it offers long performance life and low maintenance requirements. Reconstruction is also prescribed when geometric improvements are needed, or when an overlay is not feasible because of the need to maintain the existing pavement surface elevation (Yrjanson 1988).

Summary of Current Technology and Recent Developments

Recent developments in concrete technology that have affected reconstruction projects include concrete recycling, Fast-Track paving, improved paving equipment and methods, and pavement design improvements. Concrete recycling, where the existing pavement is crushed and used as aggregate in the new pavement, is rapidly becoming a routine part of pavement reconstruction projects. Iowa's Fast-Track program demonstrated the feasibility of constructing PCC pavements that can be opened to traffic within 6–24 hours of placing concrete. Recent developments in construction equipment, such as DBIs and ZCPs help facilitate the construction process and make it possible to pave while maintaining traffic in the adjacent lane and on the shoulder. Recent advances in concrete technology have also led to pavement design changes, such as the use of permeable bases, positive drainage

systems, tied concrete shoulders, reduced joint spacing, and corrosion-resistant dowel bars, which, in turn, have contributed to increased concrete pavement life.

Recycling

One of the most noticeable new developments in concrete pavement reconstruction is concrete recycling. Two of the factors that favor recycling over other alternatives are environmental advantages and savings in hauling time and costs. Recycling is particularly advantageous for reconstruction in urban areas, where disposal may be difficult, if not costly. Transporting material over even short distances can also be costly in urban areas due to traffic congestion problems. Recent advances in pavement removal and processing equipment make it possible to economically produce recycled aggregate from deteriorated pavements (Yrjanson 1989). New equipment has been developed for efficient breaking, removing, and crushing of old pavements. Efficient procedures have been developed for the removal of steel from the broken concrete. Significant advances have also been made in the application of recycled aggregate in reconstruction projects. Recycled aggregate is now being used in almost all applications where normal aggregate would have been used in pavement reconstruction projects.

Laboratory and field studies during the 1970s and 1980s revealed that excellent-quality concrete can be produced from recycled aggregate (Yrjanson 1989; Halverson 1981; Haas 1986; Hankins and Borg 1984; McCarthy 1986; Van Matre and Schutzbach 1989; Montana does its homework 1987). Even badly d-cracked pavements and pavements containing alkali-reactive aggregates can be recycled to produce durable concrete. The common practice in recycling d-cracked pavement is to reduce the top size of recycled aggregate to 3/4 inch (19 mm) or less (Ohio specified 0.5 inch [13 mm] maximum size on some of their projects). This treatment is effective in reducing the d-cracking potential and improving the durability of the recycled aggregate concrete; however, the small top-size aggregates do not have adequate capacity to transfer shear through aggregate interlock at joints and cracks. Consequently, faulting at cracks and joints has been a problem on several projects. Because of this problem, the recommended practice is to construct plain, short-jointed pavements with dowels for load transfer, when small top-size aggregates are used (Yrjanson 1989). Another alternative is to supplement the recycled aggregate with coarse virgin aggregate having the desirable maximum size. No other special problems with recycling d-cracked pavements have been noted.

Wyoming has experimented with recycling concrete pavements containing alkali-reactive aggregate. Type F fly ash was used to mitigate the expansion of the reactive aggregate. It is recommended that the fly ashes used in the mix be tested by the procedures outlined in ASTM C 441. Producing concrete with alkali-reactive aggregate is no different for the recycled aggregate than for virgin aggregate. The recycled aggregate tends to be less reactive; hence, recycled alkali-reactive aggregate can be expected to give better durability.

A number of states—including Michigan, Wisconsin, Minnesota, North Dakota, Oklahoma, Iowa, Illinois, and Wyoming—have completed several concrete recycling projects (Yrjanson 1989; Halverson 1981; Haas 1986; Hankins and Borg 1984; McCarthy 1986; Van Matre and Schutzbach 1989; Montana does its homework 1987; Wisconsin begins major interstate reconstruction 1984; Klemens 1990a). Significant cost savings were reported on most of these projects. All states that have experimented with concrete recycling reported success, and plan for expanded use in the future. The areas that need further research include mix proportioning, and further verification of long-term performance of recycled aggregate concrete.

Fast-Track Paving

Early opening of concrete pavements to traffic is one of the topics that has been given much emphasis in recent years. Traffic congestion is increasingly becoming a major consideration for highway reconstruction or rehabilitation projects, especially in urban areas. Fast-Track paving provides a solution to this problem. Standard specifications used by most agencies for conventional concrete mixes require opening to traffic based on strength or curing intervals from 5 to 14 days, or both. By using Fast-Track technology, concrete mixes can be designed to develop the required strength for opening from 6 to 24 hours (Fast Track concrete pavements 1989; Chase 1989; Fast Track and Fast Track II 1990). Fast-Track paving has been used successfully in almost all types of applications, including reconstruction, full-depth repair, slab replacement of intersections, urban highways, urban and residential streets, and single-access roads (Chase 1989; Fast Track and Fast Track II 1990; Fast Track stands up 1990; Fast-Track magic 1990; Oregon City joins swing 1987; Ferragut 1990).

Through proper selection of cement type, mix design, and curing conditions, it is possible to achieve beam flexural strength in excess of 400 psi (2.8 MPa) in 12 hours, using conventional materials (Chase 1989). This is typically achieved by using a high cement content and a low w/c. Type III portland cement is widely used in Fast-Track mixes; however, it is important to note that the early strengths of cement cubes made with Type III cement can vary considerably, depending on the source (Fast Track and Fast Track II 1990). Iowa requires that Type III cement used in the Fast-Track mixes produces 12-hour cube strengths of at least 1,300 psi (9.0 MPa) when tested in accordance with ASTM C109. This is a modified version of the AASHTO material specification M-85. The properties of the locally available cement should be investigated before its use is specified. Type I and II cements are also used to produce Fast-Track mixes, but they generally require admixtures to develop the necessary early strength.

Type C fly ash is often used in Fast-Track mixes as a partial replacement for cement or as an additive (Fast Track concrete pavements 1989). Type F fly ash may also be used, but only as an additive to improve durability. The Type F should not be used as a cement replacement for Fast-Track mixes because it does not contribute to early strength. Fly ash

reacts with the products of cement-water hydration to improve the ultimate strength and durability of concrete. In plastic concrete, fly ash has the effect of improving workability. However, because fly ash can slow the rate of early strength gain, cement substitution with fly ash in excess of 10% is not recommended (Fast Track concrete pavements 1989). Fly ash concrete requires a high dosage of air-entraining agent for the same air content. The normal replacement ratio is 1.5:1, fly ash to cement, by weight.

Other additives normally used in Fast-Track mixes include air-entraining agents and water reducers. It is important in Fast-Track concrete mixes that no more than the recommended amount of entrained air be used, because the excess air can reduce the early strength of the mix. The water reducers contribute to the early strength gain by allowing use of a low w/c while giving a reasonable workability. At any given w/c, the addition of a water reducer results in greater workability. Accelerating admixtures have not been used extensively in Fast-Track mixes to date; however, it is anticipated that their use will increase with time, particularly with Type I and II cements.

For Fast-Track mixes, more careful control of aggregate gradation is warranted. Aggregate gradation has a significant influence on workability of fresh concrete, as well as strength development and long-term durability. In general, uniform gradation is desirable for Fast-Track mixes. Gap-graded materials can produce the required strength, but they do not provide the needed workability. The intermediate-sized materials (passing 3/8 inch [9.5 mm], but retained on a No. 16 [1.18-mm] sieve) perform an important function in that they fill the voids typically filled by less dense cement paste. This improves the density and workability of the mix and reduces the demand for water. A uniform gradation provides for an adequate amount of the intermediate-sized materials.

The mix proportions of Fast-Track I and Fast-Track II mixes developed by the Iowa DOT are shown in Table 5.1 (Fast Track and Fast Track II 1990). The special Type III cement is used in these mixes, and the w/c for the Fast-Track mixes generally ranges from 0.40 to 0.48. The table shows 10% cement substitution with fly ash. The conventional Fast-Track I mix contains 710 pounds/yd^3 (421.4 kg/m^3) of the Type III cement; Fast-Track II contains 822 pounds/yd^3 (487.9 kg/m^3). Figure 5.1 shows the strength gain characteristics of the Fast-Track mixes. Fast-Track I achieves a flexural strength of 400 psi (center-point [2.8 MPa]) for opening to traffic in less than 12 hours; Fast-Track II achieves a flexural strength of 350 psi (center-point [2.4 MPa]) in less than 7 hours. Iowa considers a flexural strength of 350 psi (center-point [2.4 MPa]) adequate for opening to traffic. ACPA does not recommend opening to traffic at flexural strengths below 200 psi (third-point [1.4 MPa]). Third-point loading strengths are approximately 85% of center-point loading strengths.

No special equipment or procedure is required for Fast-Track paving; however, curing of Fast-Track pavements does demand more attention. Fast-Track pavements require thorough curing protection. This is needed to retain the moisture and heat necessary for high-early strengths. Current practice is to apply curing compound at 1.5 times the standard application rate. This practice has been effective in preventing shrinkage cracking and

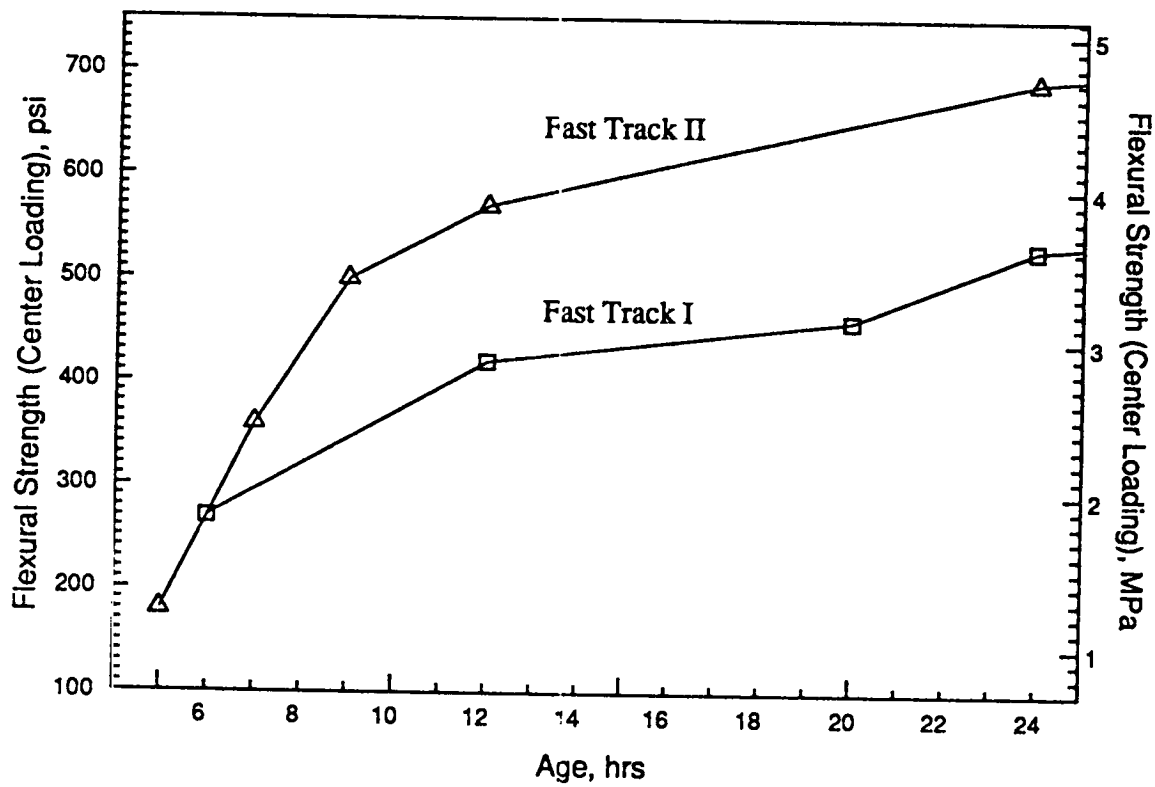

Figure 5.1. Strength gain characteristics of the Fast-Track mixes.

other curing-related problems. Ensuring heat retention generally requires some form of insulation, except in very warm climates or hot summer weather. Curing blankets can be used to provide adequate insulation under most normal paving operations.

Table 5.1. Fast-Track and Fast-Track II mix proportions.

Mix	Cement lb/yd^3 (kg/m^3)	Fly ash lb/yd^3 (kg/m^3)	Fine aggregate lb/yd^3 (kg/m^3)	Coarse aggregate lb/yd^3 (kg/m^3)	Air-entr. agent oz (g)	Water reducer oz (g)
Fast-Track I	641 (380)	73 (43.3)	1,393 (827)	1,359 (807)	10 (284)	28.6 (811)
Fast-Track II	742 (440)	80 (47.5)	1,305 (775)	1,302 (773)	11 (312)	24.8 (703)

One other operation that requires some adjustment for Fast-Track paving is joint sawing and sealing. There are no equipment limitations for Fast-Track paving, but the schedule of sawing and sealing must be modified to be consistent with the accelerated rate of construction and project opening of Fast-Track paving. Joints should be sawed as soon as possible to avoid cracking, usually within 3 or 4 hours of placement, but some delay may be needed before the sealants can be placed. Dry reservoir sidewalls are desirable for most of the current joint sealants. Some of the sealants that have worked well on previous projects include low-modulus polymer sealants and silicone sealants. Preformed neoprene compression sealants have not yet been used in Fast-Track construction, but they may be ideal for this application: these sealants are not highly sensitive to dirt or moisture on the joint faces (Fast Track concrete pavements 1989).

Fast-Track paving has been used successfully for almost all types of concrete pavements, including intersections, urban highways, urban and residential streets, single-access roads, and airfield pavements (Chase 1989; Fast Track and Fast Track II 1990; Fast Track stands up 1990; Fast Track magic 1990; Oregon City joins swing 1987). Urban intersections have been reconstructed and reopened to traffic in 12 hours, between 6:00 P.M. and 6:00 A.M. of the following day, using Fast-Track II mix. In most cases, Fast-Tracking is not necessary for the whole project: only the intersections and the last few sections (in the case of a large project consisting of several sections) need to be Fast-Tracked for early opening. In 1987, nine Fast-Track paving projects were constructed in Iowa (Chase 1989). The projects included the following:

- A 2,400-foot (731.5-m) section of a 22-foot (6.7-m) wide county road providing access to a grain and railroad salvage company that was paved and opened to traffic in 2 days. The mix without fly ash developed beam flexural strength of more than 500 psi (3.4 MPa) in 24 hours.

- An industrial road providing sole access to a major retail distribution center. The project was a 7-inch (178-mm) PCC overlay, 10,666 feet (3,250 m) long and 22 feet (6.7 m) wide. The road was closed for construction Friday evening and opened to traffic Monday at 6:00 A.M.

- A 5,440-foot (1,658-m) long and 22-foot (6.7-m) wide road that provides the exclusive access to a residential subdivision. The paving operation began at 7:30 A.M. one day, and the road was open to traffic by 5:00 P.M. the following day.

- A county road that provides access to Castana, Iowa. The construction time had to be minimized because the detour was 25 miles (40 km). The 5,170-foot (1,576-m) Fast-Track portion of the project achieved flexural strength of 350 psi (center-point [2.4 MPa]) for opening in 12 hours.

- The center 25-feet (7.6 m) of the runway at the Osceola Airport. This allowed the subsequent paving operations on the adjacent sections to proceed without costly curing time.

Numerous other states, including Michigan, Colorado, Virginia, and Pennsylvania, have been active in the development of Fast-Track techniques. FHWA initiated Special Project 201, "Accelerated Rigid Paving Techniques," in 1988 to promote the development of Fast-Track techniques. Several pilot projects have been completed with the assistance of FHWA under this program. The problems to be solved before Fast-Track concrete construction is fully competitive with asphalt concrete construction, in terms of speed of placement and opening to traffic, include the following (Ferragut 1990; Munn 1989b):

- The drop-off from the edge of the slab to the grade that may prevent traffic from safely using the newly paved lane

- Paving equipment projecting into adjoining traffic lanes

- Lack of methods to accurately and quickly determine slab strength in the field

- Establishing minimum strength of concrete at opening for various applications

Various nondestructive testing techniques, including the pulse-velocity device and the maturity concept, have been evaluated on several FHWA projects (Ferragut 1990). Promising results have been obtained from the field trials.

Paving Equipment and Methods

Introduced during the 1950s, the slipform paver completely revolutionized concrete pavement construction, to the point where virtually all concrete pavements (except residential streets) are now placed using slipform pavers. Recent enhancements to slipform pavers include the addition of DBIs and configuration for zero-clearance paving. The development of ZCPs allowed the development of several new construction techniques, including concrete inlays and paving under traffic. Slipform pavers with a paving width ranging from 12 to 60 feet (3.7 to 18.3 m) are now available for all types of projects, from small parking lots to the largest highway and airfield pavements (Yrjanson 1988; One-pass slipforming 1979).

The use of DBIs has become prevalent within the last few years—to the extent that it is no longer economically feasible for contractors to compete for large projects without using a DBI. Laboratory and field studies have shown that DBIs can position dowels at least as accurately as dowel baskets (Munn 1989b; Bock and Okamoto 1989; Munn 1990b; Dowel bar inserter 1990). State-of-the-art DBIs can be programmed to place dowels for any joint spacing, including randomly spaced skewed joints. The use of DBIs keeps the roadbed clear of the dowel baskets, allowing the lanes under construction to be used as the hauling road. This practice, in conjunction with the use of a ZCP, makes it possible to pave under traffic—i.e., paving while maintaining traffic in adjacent lanes and on the shoulder.

ZCPs do not require any side clearance. This allows the pavers to slip by roadside obstructions, and confines the construction activities to the lanes being constructed. Several construction practices were made possible by the development of ZCPs, including the following:

- Paving under traffic—paving while keeping one or more lanes open for traffic, using the adjacent lane and the shoulder. This technique is widely used to alleviate traffic control problems on heavily trafficked roads (Charonnat, Gallenne, and Deligne 1989; Concrete interstate widened 1984; Permeable base doubles 1990; Bonded concrete inlay 1990; Calvert 1983; Kuennen 1990).

- Concrete inlays—the practice of rehabilitating only the deteriorated lanes of the roadway. The deteriorated lanes are either completely removed and reconstructed, or only partially removed and overlaid with bonded or unbonded concrete overlays (Van Matre and Schutzbach 1989; Bonded concrete inlay 1990; Calvert 1983; Kuennen 1990). The adjacent lanes, shoulders, or curbs are left alone or only a leveling course is placed after the inlays have been constructed.

ZCPs also keep roadside obstacles from interfering with the paving operations, and make it possible to continue paving while previously poured adjacent lanes have not yet gained

sufficient strength to support the construction equipment. This can result in tremendous savings in construction time and cost (Klemens 1989; Zero clearance paver 1990).

One other recent development in equipment deserves a special mention. In France, an existing slipform paver was modified to place two layers of different concrete along with welded, continuous steel reinforcements in a single pass (Charonnat, Augoyard, and Ponsart 1987). The modification included the addition of a sophisticated frontal feeding system, a second conforming plate, and mobile welding stations to an existing slipform paver. The new process was designed to optimize the use of materials by matching the material properties with the functional requirements of the application. Placing the two layers in a single pass allows the mortars of each concrete to mix at the interface, creating a monolithic structure that provides much greater structural capacity. The innovative equipment design allowed significant savings in material and labor costs.

Pavement Design Improvements

Many states are now utilizing a permeable base under concrete pavements to facilitate drainage of the pavement structure. Studies have shown that if properly designed and constructed, permeable bases can virtually eliminate pumping and faulting problems (Mathis 1989; Munn 1990a; Larsen and Armaghani 1987). To aid drainage, a longitudinal-edge drain collector system is commonly placed in conjunction with permeable bases, or as a retrofit.

Another important change in concrete pavement design is the use of widened traffic lanes and tied concrete shoulders along major highways (Munn 1989b; Tayabji, Ball, and Okomoto 1983; Barksdale and Hicks 1979; Munn 1989d). Tied concrete shoulders provide for an easily maintained joint between the concrete mainline pavements and shoulder. The shoulder joint has been shown to be a major entry point for water into the pavement structure, particularly when bituminous shoulders are used (Barksdale and Hicks 1979). More importantly, tied concrete shoulders significantly reduce the maximum deflection and stress at the slab edge, thereby reducing fatigue damage due to repeated loading (Tayabji, Ball, and Okomoto 1983). Widened traffic lanes can be even more effective than tied shoulders in reducing the edge stresses and deflections. In addition, with widened traffic lanes, there is no uncertainty about the load transfer at this joint. These design changes are contributing to significant improvements in pavement performance.

Permeable Bases. The idea that a slab can be built adequately to resist damage without the provision of good subdrainage has been discredited. In the early days of pavement design, the primary function of the base for concrete pavements was thought to be provision of construction platform and uniform support for the slabs (Mathis 1989; Munn 1990a). As traffic loads increased with time, erosion and pumping became a major problem. This led to the construction of strong, dense-graded granular bases and treated asphalt or cement bases, which were thought to be nonerodible However, these materials were not only

impermeable, they were also found to be erodible in many cases. The infiltrated moisture could not easily drain, and under the effects of heavy traffic loads led to weakening or erosion of the base, subbase, and subgrade, often causing premature failure of the pavement structure through faulting and loss of support, leading to cracking.

In recognition of the importance of good drainage, several states now use permeable bases to allow rapid removal of water from the pavement structure. In 1988, FHWA surveyed ten states known to have built permeable bases (California, Michigan, New Jersey, Pennsylvania, Iowa, Kentucky, Minnesota, North Carolina, West Virginia, and Wisconsin). Since the survey, thirteen other states (Arkansas, Delaware, Indiana, Kansas, Maryland, Ohio, South Carolina, Virginia, Washington, Wyoming, Illinois, New Mexico, and Oklahoma) and the U.S. Army Corps of Engineers have built permeable bases. Within the last 7 years, permeable bases under high-type PCC pavements have become standard in nine states. Studies have shown that, if properly designed and constructed, permeable bases can substantially reduce pumping and faulting problems (Mathis 1989; Munn 1990a; Larsen and Armaghani 1987). The elimination of these types of problems also contributes to reducing certain types of cracking caused by loss of support.

The gradation for the permeable bases used by most states is essentially equivalent to their conventional dense-graded aggregate base gradation with some of the fines removed. Table 5.2 shows the permeable base gradation from the ten states that specify its use. The predominant material used for stabilization is asphalt cement, added at the rate of 2% by weight. California allows portland cement at 2–4 bags/yd^3 (112–335 kg/m^3) (also called draincrete) as an option. The permeability of these bases ranges from 200 to 3,000 feet/day (61.0–914 m/day) for untreated bases, to 3,000 to 20,000 feet/day (914–6,100 m/day) or more for treated bases. The thickness of permeable bases varies from 3 to 6 inches (76 to 152 mm), with 4 inches (102 mm) being the most common (Munn 1990a).

Permeable bases can be designed and constructed for markedly improved performance without significant changes to the conventional practice. Only minor equipment modifications are needed to construct pavements on untreated permeable bases. The modifications include the use of wider rubber tires on the reinforcing mesh cart, the use of tracked pavers, and the use of longer pins for holding dowel baskets in place. The cost of permeable base materials is slightly higher on a per unit weight basis than the cost of conventional dense-graded materials, but permeable materials have higher yield, resulting in comparable overall cost. The results of static and repeated load tests conducted on permeable base material indicate that the structural capacity of untreated permeable base is similar to that of dense-graded aggregate base (Mathis 1989).

Treated permeable bases usually have sufficient stability to support construction traffic, but extra care is needed to prevent contamination of the layer. Most states restrict construction equipment other than the paving and finishing equipment from traversing the permeable base. The cost of treated permeable bases is also comparable to that of treated dense-graded bases.

Table 5.2. Permeable base gradation.

Sieve size (in mm)	Percent passing								
	CA*	NC/WV*	IA	KY	MI	MN	NJ	PA	WI
2 (50.8)	—	—	—	—	—	—	—	—	—
1.5 (38.1)	—	10	—	100	100	—	100	—	100
1 (25.4)	100	95–100	100	95–100	—	100	95–100	—	100
3/4 (19.1)	90–100	—	—	—	—	66–100	—	52–100	90–100
1/2 (12.7)	35–65	25–60	—	25–60	0–90	—	60–80	—	—
3/8 (9.5)	20–45	—	—	—	—	35–70	—	35–65	20–55
No. 4 (4.75)	0–10	0–10	—	0–10	0–8	20–45	40–45	8–40	0–10
No. 8 (2.36)	0–5	0–5	10–35	0–5	—	—	5–25	—	0–5
No. 10 (2.00)	—	—	—	—	—	8–25	—	—	—
No. 16 (1.18)	—	—	—	—	—	—	0–8	0–12	—
No. 30 (0.600)	—	—	—	—	—	—	—	0–8	—
No. 40 (0.425)	—	—	—	—	—	2–10	—	—	—
No. 50 (0.300)	—	—	0–15	—	—	—	0–5	—	—
No. 200 (0.075)	0–2	0–2	0–6	0–2	—	0–3	—	0–5	—
Permeability									
ft/day	15,000	20,000	500	20,000	1,000	200	2,000	1,000	18,000
(m/day)	(4,570)	(6,100)	(152)	(6,100)	(305)	(61.0)	(610)	(305)	(5,490)

*Treated bases

Permeable bases must be protected by either a layer of filter aggregate or filter fabric to prevent intrusion of fines from the subgrade. In most cases, the filter aggregate layer is the state's conventional dense-graded aggregate base material (Mathis 1989). With treated bases, most states use filter fabric. A longitudinal edgedrain collector system is provided in almost all cases to drain accumulated water from the permeable bases. The most common type of edgedrain is an excavated trench. Some states also use V-ditch design, but construction and maintenance of this design can be a problem. Protecting the drainage pipe from being crushed under construction traffic is also a problem for the V-ditch design. Several states locate the trench 2–3 feet (0.61–0.91 m) out from the shoulder joint to avoid settlement or crushing of the collector pipes by construction equipment.

Most states backfill the edgedrain trench with the same permeable material that is used for the permeable base. An outlet pipe is used to convey the accumulated water from the collector to the ditch or other inlet structure. These are typically spaced at 500- to 1,000-foot (152.4- to 304.8-m) intervals. A number of states have encountered problems with maintaining the proper outlet grade with flexible corrugated plastic pipes, and now specify the use of rigid PVC pipes. The typical permeable base pavement sections are shown in Figure 5.2.

Concrete Shoulders. Concrete shoulders can greatly improve the performance of mainline pavements and, at the same time, reduce shoulder maintenance. The open joint between concrete mainline pavements and bituminous shoulders is a major point of entry for the surface water to drain into the pavement structure (Barksdale and Hicks 1979). The movement of such water at this joint often causes severe shoulder erosion and sometimes causes pumping and faulting at the joints or cracks in the pavement. Tied concrete shoulders provide a more easily maintained joint between the mainline and shoulder pavements. More importantly, tied concrete shoulders significantly reduce maximum deflection and stresses at the slab edge. Deflection studies have shown a reduction of approximately 50% at the edge of the mainline pavement where a tied concrete shoulder is added (Tayabji, Ball, and Okomoto 1983). Some states have found that retrofitting the existing concrete pavements with tied concrete shoulders is an effective means of extending their service life.

Tied concrete shoulders can either be placed monolithically with mainline pavements in one pass, or be placed after the mainline pavement. Small slipform pavers are available for adding narrow 4-foot (1.2-m) shoulders or 10-foot (3.0-m) outside shoulders. Corrugations placed in rumble strips prevent vehicles from using the shoulder as a third lane, and provide additional safety by alerting drivers who stray from the main roadway. Concrete shoulder thickness should be at least 6 inches (152 mm). When heavy truck traffic is anticipated, the shoulder thickness should be the same as the mainline pavement thickness.

Tiebars or tiebolts are used to tie the concrete shoulders to the mainline pavements. When constructed monolithically with the mainline, tiebars are inserted into the plastic concrete near the rear of the slipform paver. In the case of retrofitting, or shoulders that are not

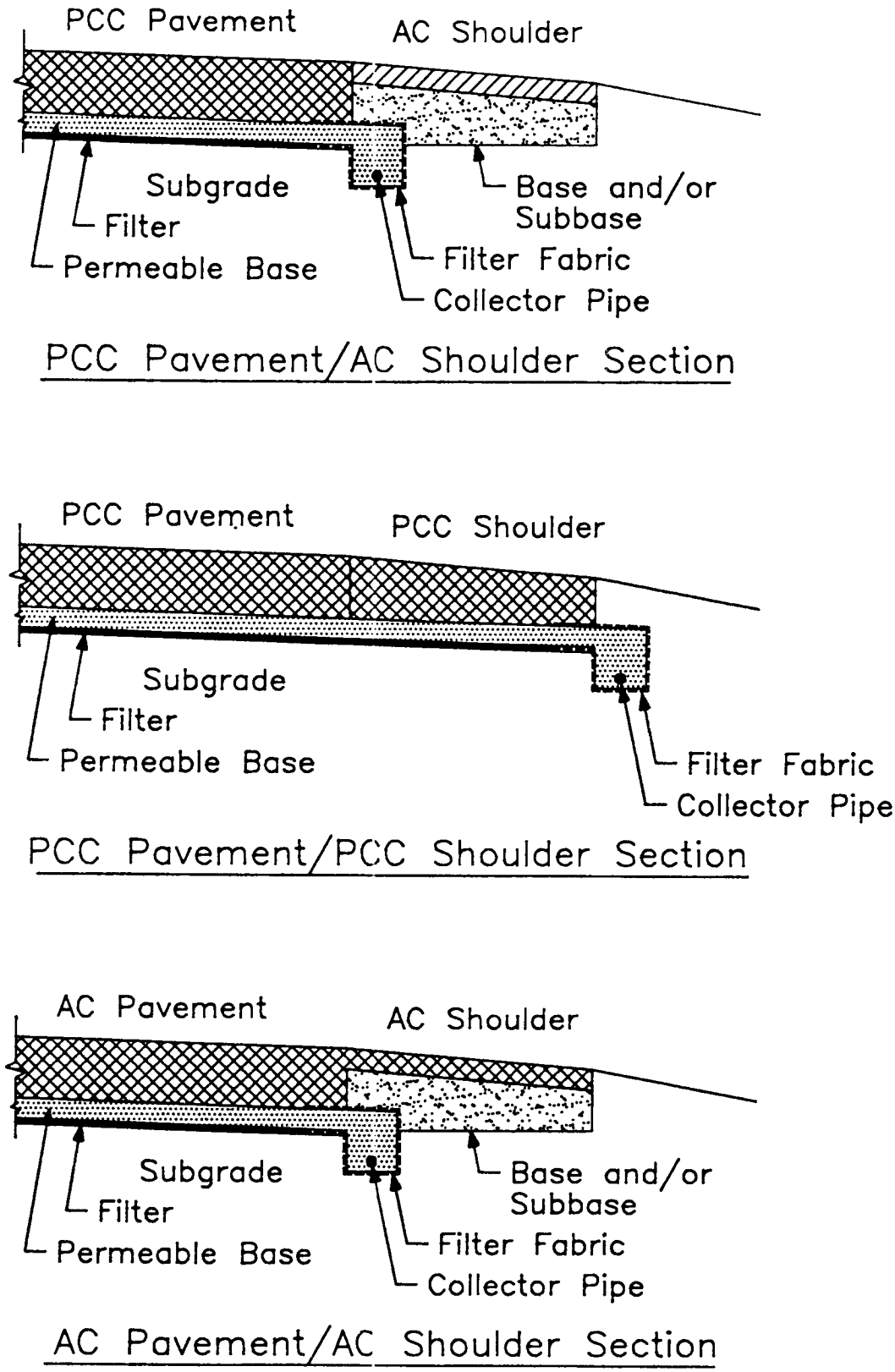

Figure 5.2. Typical permeable base pavement sections.

placed monolithically with the mainline, holes are drilled in the edge of the existing pavement; tiebars are then grouted in the holes with epoxy, or self-anchoring tiebolts are inserted. New tractor-mounted drilling equipment can drill two, three, or more holes at one time. One uncertainty associated with tied concrete shoulders is the amount of load transfer that will be maintained throughout its design life at the shoulder joint. This depends on the system used. Some of the tiebolt systems have been shown to be unreliable.

Lane Widening. Lane widening is very effective in reducing the edge stresses and deflections. Lane widening places the traffic away from the pavement edge (Heinrichs et al. 1989). This has the effect of significantly reducing the critical edge stresses and deflections. Lane widening of about 2 feet (0.6 m) is adequate to practically eliminate transverse cracking. This is being used by several states and foreign countries. The width of widening is typically 1.5–3 feet (0.45–0.9 m). Lanes are still marked at normal width (12 feet [3.7 m]), and rumble strips are usually placed along the lane, just outside of the outer lane markings, to keep the traffic off of the widened area. In addition to reducing edge stress and deflections, lane widening makes these responses less sensitive to the effects of slab warping and curling (Tayabji, Ball, and Okomoto 1983).

Trapezoidal Cross-sections. Another innovation in pavement design is trapezoidal pavement sections (Heinrichs et al. 1989). A trapezoidal cross-section varies in thickness across all lanes carrying traffic in one direction to provide a thickened outer edge for the truck lane. The advantage of this design is that it allows slab thickness to vary according to the traffic loading across the lanes. The difference in traffic load on different traffic lanes can be substantial. Table 5.3 shows a typical variation in truck traffic across lanes. This variation has resulted in many badly deteriorated pavements in the outer lanes and almost no deterioration in the inner lane. Trapezoidal cross-sections have been used in France, and California recommends their use when the traffic load indicates that different thicknesses are required on adjacent lanes (Heinrichs et al. 1989).

Table 5.3. Truck load distribution for multiple-lane, controlled access highways (Heinrichs et al. 1989).

One-way ADT	2 Lanes (one direction)		3+ Lanes (one direction)		
	Inner	Outer	Inner[a]	Center	Outer
10,000	19[b]	81	7	27	68
20,000	25	75	7	30	63
40,000	31	69	8	35	57
80,000	—	—	8	41	51

Source: NCHRP Project 1-19 (NCHRP Report 277).

[a]Combined inner lanes (one or more).
[b]Percentage of all trucks in one direction.

Projected Future Trends

Given the success reported to date, it would be safe to assume that many future reconstruction projects will involve concrete recycling and Fast-Track paving. All states that have experimented with concrete recycling reported some degree of success, and plan for expanded use of recycling on future reconstruction projects. Further research is needed in the areas of mix proportioning, load transfer, and verification of long-term performance of recycled aggregate concrete.

Fast-Track paving has been used successfully for almost all types of concrete pavements. Certain types of projects naturally lend themselves to Fast-Track construction. These include intersections, urban highways and streets, and single-access roads. A widespread use of Fast-Track paving on such applications is expected. A whole range of fast mixes, ranging from very fast mixes (reopening in less than 4 hours) to moderately fast mixes (reopening in a few days) are already available for different applications, or for different phases of a project.

Future improvements to Fast-Track paving are likely to involve the development of faster mixes, and construction methods and equipment that would allow working with the very fast mixes One of the goals of Fast-Track paving is to be fully competitive with asphalt, in terms of speed of placement and opening to traffic. As very rapid-setting mixes are developed, considerations will have to be given to the development of new methods of mixing and placing. This may involve the use of onsite batching plants, mobile mix trucks, and a combination of set retarders at the plants and accelerators at the jobsite.

Paving under traffic, made possible by the advances in equipment, is already a widely used technique that alleviates traffic congestion problems. Concrete inlays have been effective for selectively reconstructing only the deteriorated portion of the roadway. These techniques are likely candidates for use with Fast-Track technology.

With the universal acceptance that positive drainage is required to ensure long-term performance, it can be expected that the design of drainage will be an integral part of pavement design in the future. It is also expected that new concrete highways will be routinely constructed with either tied concrete shoulders or widened lanes. A majority of the states have experimented with permeable bases, and permeable bases are already specified for major roadways in nine states. As the use of permeable bases become more widespread, development of equipment for more efficient placement of this material can be expected.

Full-Depth Repair and Slab Replacement

The purpose of full-depth repair of concrete pavements is to restore structural integrity and improve rideability of concrete pavements having certain types of distresses that cannot be corrected by using partial-depth repairs. Working cracks and badly deteriorated joints are the most common problems that require full-depth repairs or slab replacements (Darter, Barenberg, and Yrjanson 1985; Snyder, Reiter, and Hall 1989; Guidelines 1989).

Full-depth repairs of PCC pavement are one part of a comprehensive rehabilitation approach called concrete pavement restoration (CPR). In CPR, various rehabilitation measures—such as full-depth repair, partial-depth repair, and diamond grinding—are undertaken to improve the condition of deteriorated concrete pavement. CPR is being performed by many states, and the single most expensive procedure is generally full-depth repairs.

Summary of Current Technology

The performance of full-depth repairs on in-service pavements has been inconsistent (Snyder, Reiter, and Hall 1989). While many have provided satisfactory performance, many others have failed within a year of construction. The major causes of these premature failures have been faulty design (particularly poor load transfer design), poor installation conditions, and poor construction quality (Darter, Barenberg, and Yrjanson 1985; Snyder, Reiter, and Hall 1989; Hall et al. 1989; Meghee 1981). A 1987 field survey by FHWA has shown that, if properly designed and constructed, full-depth repairs can provide good long-term performance (10 years or more) (Heinrichs et al. 1989; Guidelines 1989). Numerous factors affect the performance of full-depth repairs, including repair dimensions, concrete removal method, drainage condition, load transfer design, repair materials, traffic, and condition and quality of construction (Snyder, Reiter, and Hall 1989).

Distresses Addressed

Full-depth repair and slab replacement are used to address several types of distresses that occur at or near transverse cracks and joints. These include spalling, d-cracking, failure of joint load transfer devices (corrosion of dowel bars), slab breakup (corner breaks or diagonal cracks near the joint), and breakup of the slab into several pieces (Darter, Barenberg, and Yrjanson 1985; Snyder, Reiter, and Hall 1989). A detailed description of these distresses is given by Darter, Barenberg, and Yrjanson (1985) and the Transportation Research Board (1979). The severity of the distresses is the main criterion by which the decision to repair is made and repair size is determined. In general, low-severity distresses do not require full-depth repair within the next 2 years. The decision chart shown in Figure 5.3 can be used to assess the need for full-depth repair.

NOTES:

1) Perform project-wide NDT. Subseal, restore load transfer, diamond grind, as required.

2) Corners should be retrieved from representative joints to determine extent of deterioration

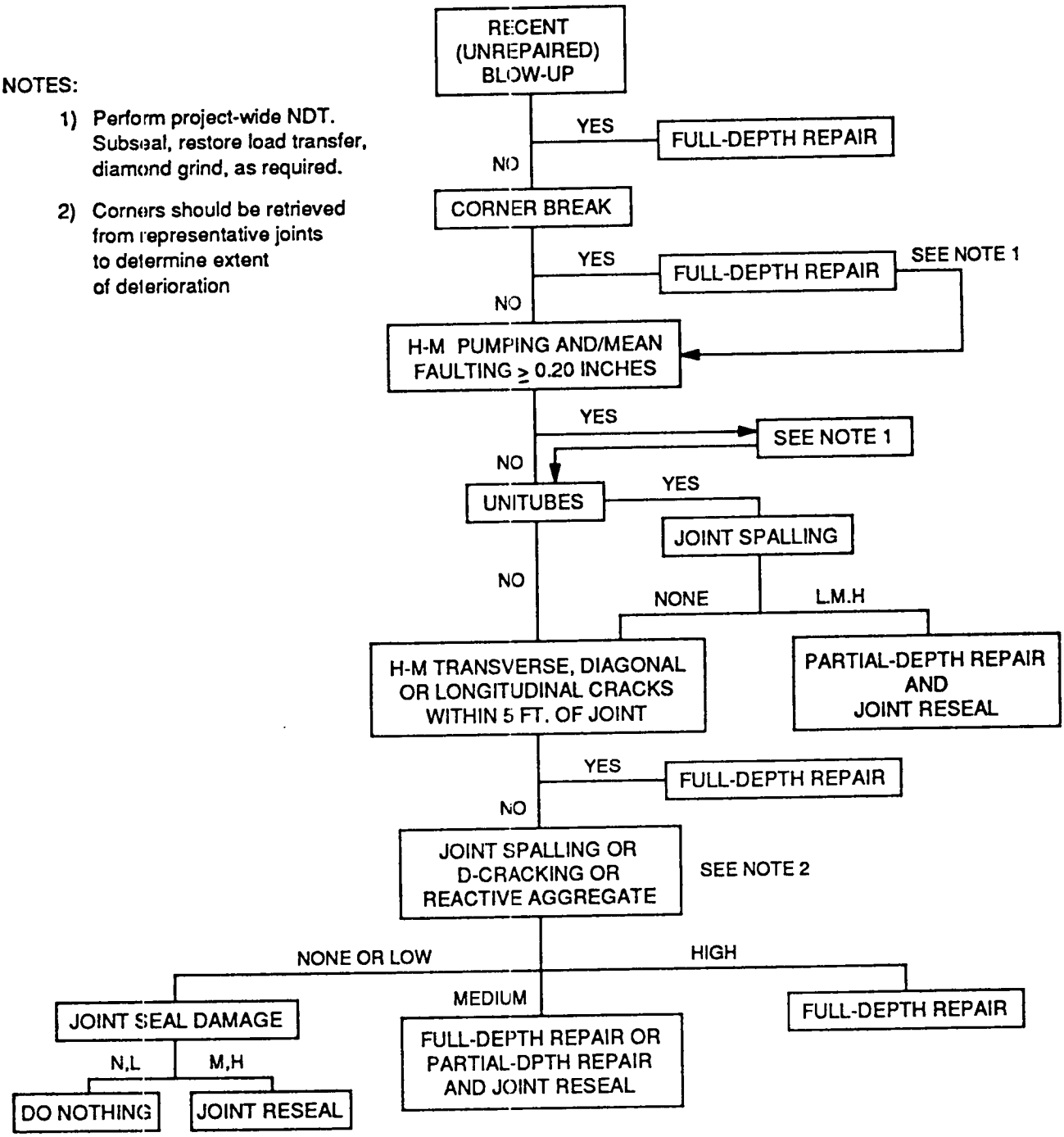

Figure 5.3. Transverse joint evaluation and rehabilitation selection for jointed concrete pavements (based on visual inspection of individual joints).

Materials

The materials used in full-depth repairs today are predominantly conventional concrete mixes with high cement content (FHWA Region 5 1984). Typical patch mixes contain between seven and nine bags of cement per cubic yard (658–940 pounds/yd^3 [390–558 kg/m^3]). Depending on the required opening time and availability, Types I, II, or III portland cement are used. The typical opening time is 6–48 hours from placement, unless an accelerating admixture is used (Darter, Barenberg, and Yrjanson 1985). The use of calcium chloride or another accelerating admixture is recommended if early opening of the repair is desired.

Many states now allow early opening when Fast-Track mixes are used. The high-early strength is typically obtained by using a high cement content, low w/c, and accelerating admixtures. A rich, low-water-content mix containing 1–2% calcium chloride will produce adequate strength and abrasion resistance for opening to traffic in 4–5 hours at temperatures above 50°F (10°C) (Transportation Research Board 1977). The accelerators are added at either the ready-mix plant or the jobsite, depending on the temperature and distance to the plant. Other admixtures commonly used in repair mixes include air-entraining agents, water-reducers, and superplasticizers.

Construction

Selection of Repair Boundaries. The repair boundaries are selected to include all of the significant distresses in the area. To ensure that all unsound concrete in the area is included within the selected repair boundaries, the boundaries are normally extended a minimum of 2 feet (0.6 m) on either side of visible defects. The location of the boundaries also depends on the level of load transfer that will be provided (Snyder, Reiter, and Hall 1989). The repair size must be large enough to avoid rocking and longitudinal cracking of the repair. A minimum repair length of 6 feet (1.8 m) and repair width of 12 feet (3.6 m), or the lane width, is recommended to provide stability under heavy traffic and to prevent longitudinal cracking (Darter, Barenberg, and Yrjanson 1985). In the case of short-jointed plain concrete pavements with high-severity distresses, the recommended practice is to replace the entire slab. For repairs longer than 15 feet (4.6 m), either reinforcement is provided, or an intermediate doweled transverse joint is placed to prevent transverse cracking. If the repair length is extremely long, additional transverse joints can be placed at 15-foot (4.6-m) intervals. Example repair layouts are shown for jointed plain concrete pavements and jointed reinforced pavements in Figures 5.4 and 5.5, respectively.

Isolation of the Removal Area. The boundaries of the repair area are sawed full-depth, using diamond blades to isolate the repair area. The diamond saws produce a smooth joint face with no load transfer capacity. Once the boundary cuts are made, it is recommended that the repair area be closed to traffic until the repairs have been completed to avoid pumping and erosion beneath the slab. In hot weather, it may not be possible to make the

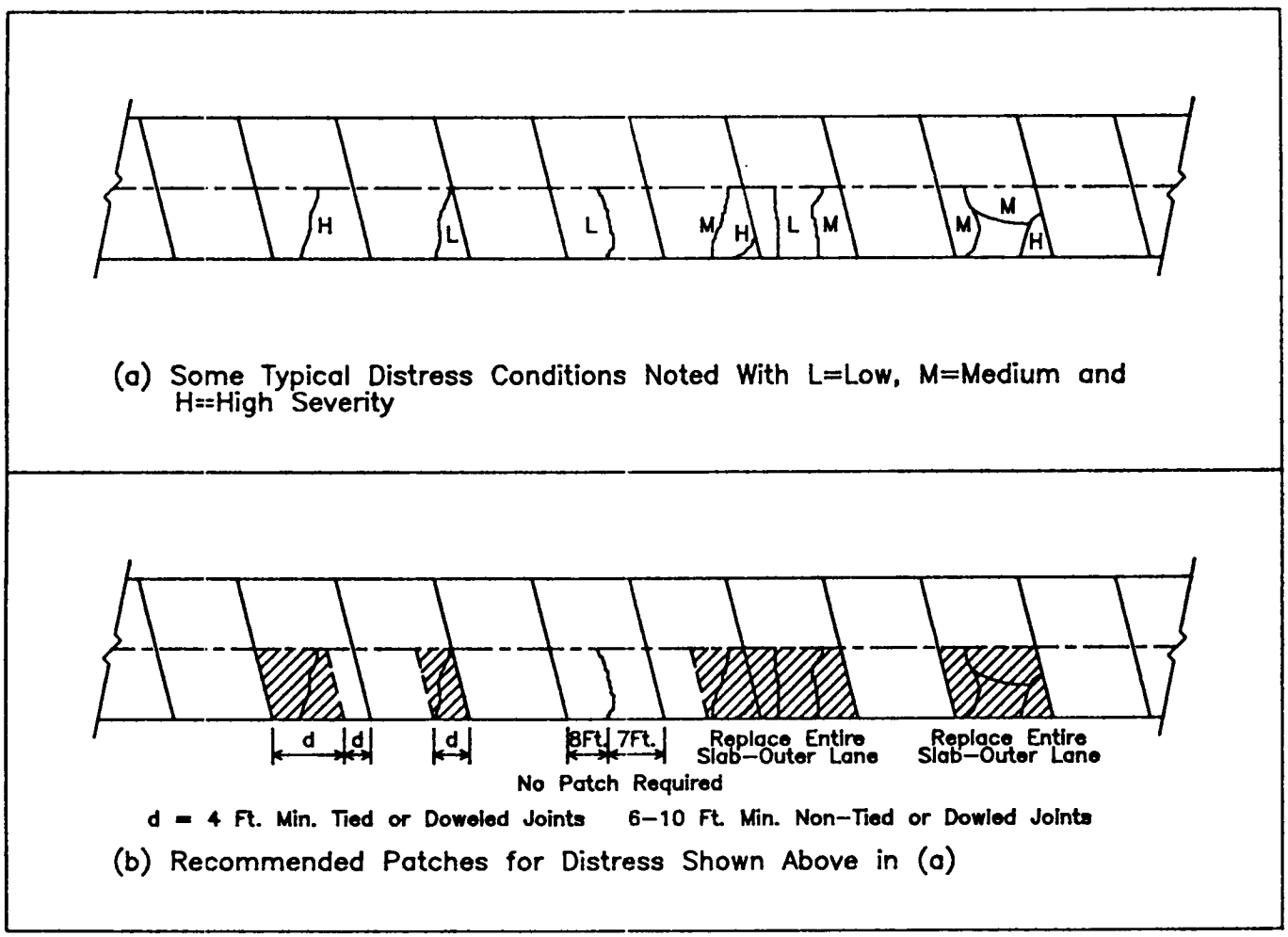

Figure 5.4. Repair layout for jointed plain concrete pavements.

transverse isolation cuts without first making a wide pressure relief cut within the proposed patch area, because of the high compressive stresses in the slab binding the sawing equipment (Guidelines 1989). A carbide-tipped wheel saw can be used for this purpose. When a wheel saw is used, the transverse isolation cuts (using diamond blades) must be made at least 18 inches (457 mm) outside of the wheel saw cut to avoid damage to adjacent concrete (Darter, Barenberg, and Yrjanson 1985; Snyder, Reiter, and Hall 1989). The wheel saw should not penetrate more than 0.5 inch (13 mm) into the subbase to prevent damage to the subbase.

Some agencies require a roughened joint face at the transverse joints to provide for load transfer through aggregate interlock in addition to dowels. The roughened joint face can be economically developed by making two saw cuts at each joint, and chipping with a light (15-lb [6.8-kg], recommended) pneumatic hammer (Guidelines 1989). First, a partial-depth cut is made by using a double-bladed saw with the saw blades 1.5–2.0 inches (38–51 mm) apart. The cut is made to a depth of one-quarter of the nominal thickness of the slab. A full-depth cut is then made along the inner saw cut, using a single-bladed saw. After the slab is removed, a light pneumatic hammer is used to chip and roughen the joint face to the outer saw cut.

Concrete Removal. Concrete is removed by either the breakup or the liftout method. The preferred method of concrete removal is the liftout method. This method generally provides the best results and the highest production rates for the same or lower cost, with the least disturbance to the subbase (Darter, Barenberg, and Yrjanson 1985; Snyder, Reiter, and Hall 1989; Guidelines 1989; Smith et al. 1987; FHWA Region 5 1984; Gulden and Thornton 1984). Both methods require the full-depth cut around the perimeter of the patch area. The following is a brief summary of the two methods:

- In the breakup method, the boundary cuts are made, and the slab to be removed is broken up with a jackhammer, a drop hammer, or hydraulic ram equipment. The slab is then removed, using a backhoe and hand tools. The use of large drop hammers or automated jackhammers is not recommended.

- In the liftout method, the deteriorated slab is lifted out, using heavy equipment. If needed, additional cuts are made to divide the slab into pieces small enough for the available lifting equipment to handle, and holes are drilled through the slab to allow fitting of lifting pins. The lifting is normally done by using a front-end loader.

After the deteriorated slab has been removed, attempts are usually made to restore the subbase to a stable condition. It is recommended that all disturbed or loose material in the subbase or subgrade be removed. A lateral drain is occasionally cut through the shoulder to remove entrapped water in the repair area. To avoid settlement, compaction of the entire foundation is recommended before the concrete is placed.

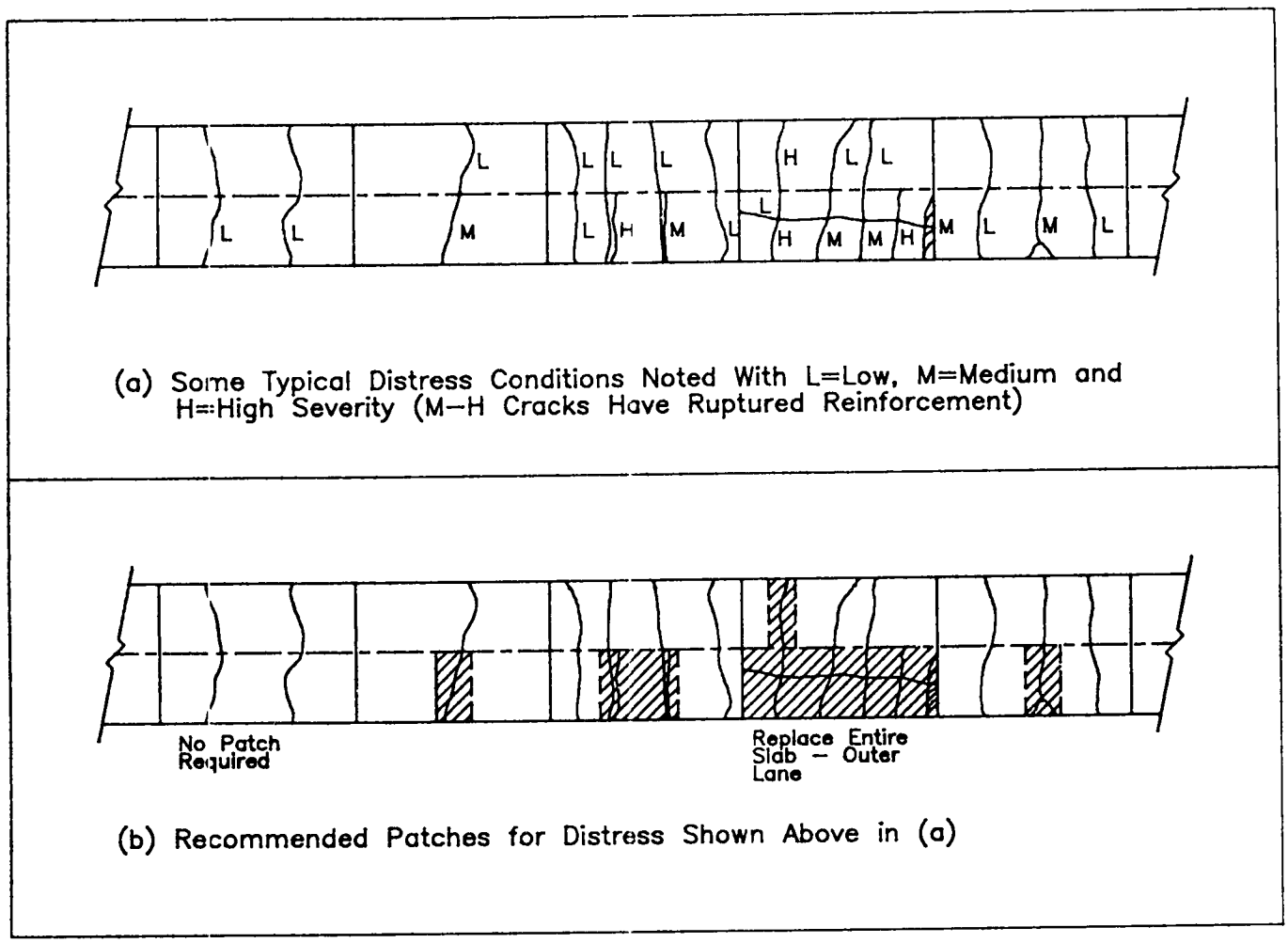

Figure 5.5. Repair layout for jointed reinforced pavements.

Load Transfer. Adequate design and proper installation of load transfer devices is critical to the performance of full-depth repairs. Dowel bars are normally used to provide load transfer across the repair joints. Either smooth steel dowels or deformed rebars can be used. Smooth dowels are recommended for long-jointed pavements to allow free movement. When deformed bars are used at one end, the recommended practice is to place them in the approach joint, because this joint tends to become very tight from the action of truck wheels pushing the slab backwards (Snyder, Reiter, and Hall 1989). The dowel size should be 1.25–1.5 inches (32–38 mm) in diameter, and 18 inches (457 mm) in length. Many agencies have found placing dowels closely spaced under the wheel path to be more effective than spreading them across the lane width (Guidelines 1989; FHWA Region 5 1984). In this design, at least four or five dowels should be placed within each wheel path. Epoxy-coated dowels are recommended for protection against steel corrosion in locations where deicing chemicals are used (Transportation Research Board 1984).

Dowels are placed by drilling holes into the sawed face of the existing slab and anchoring them in the holes with either epoxy or grout. The holes are commonly drilled with gang drills (several drills mounted in a rigid frame in parallel). This equipment drills several holes simultaneously, while maintaining proper horizontal and vertical alignment. The use of single hand-held drills is not recommended because of the likelihood of misalignment. Once the holes are drilled, debris and dust are removed from the backs of the holes by using compressed air; epoxy or grout is then placed at the backs of the holes before the dowel bars are inserted in the holes.

It is important that the epoxy or grout is placed at the backs of the holes so that the material is forced forward when the dowels are inserted (Darter, Barenberg, and Yrjanson 1985; Snyder, Reiter, and Hall 1989; Gulden and Thornton 1984). As the dowel is inserted, it should be twisted slightly to ensure that the anchoring material completely covers the dowel. The use of a grout retention disk is strongly recommended to hold the epoxy or grout in the hole during the dowel insertion. A grout retention disk is a thin (1/16 inch [1.6 mm] minimum thickness) plastic disk with an inside diameter 0.02 inch (0.5 mm) greater than the diameter of the dowel bar, and outside diameter about 1.0 inch (25 mm) greater than the inside diameter. The disk is extremely effective in preventing the anchoring material from flowing out of the hole and ensuring more uniform dowel support, especially at the joint face where the bearing stresses are high.

Concrete Placement. Critical aspects of concrete placement and finishing for full-depth repairs include attaining adequate consolidation and a level finish with the surrounding concrete (Darter, Barenberg, and Yrjanson 1985; Snyder, Reiter, and Hall 1989). The concrete mix should have a slump of 2–4 inches (51–102 mm) at the repair site for best placement. A straight edge or vibratory screed is used for finishing. The best results have been obtained by using a vibratory screed parallel to the centerline of the pavement (Guidelines 1989). After the placement, the surface is textured to match, as much as possible, the texture of the surrounding concrete.

It is recommended that transverse and longitudinal joints be sawed and sealed on full-depth repairs. Experience has shown that sealing joints will substantially reduce spalling of the joints and longitudinal repair cracks (Darter, Barenberg, and Yrjanson 1985; Snyder, Reiter, and Hall 1989; Guidelines 1989). A minimum reservoir depth of 2 inches (51 mm) is recommended to avoid point bearing at the top of the repair surface. Conventional joint sealing material and methods are used to seal the joints.

Curing and Opening to Traffic. The concrete repair material is normally cured by using pigmented curing compound. In general, a normal rate of application is sufficient (Guidelines 1989). For rapid curing, the use of insulation blankets is highly recommended, especially in cold weather. Polyethylene sheeting should be placed on the concrete surface to prevent moisture loss when insulation blankets are used. Wet burlap is also used as a curing cover.

Either of two different methods are used to specify when repairs can be opened to traffic (Darter, Barenberg, and Yrjanson 1985; Snyder, Reiter, and Hall 1989):

- Minimum strength of beams or cylinders—The minimum required strength before a repair can be opened to traffic has not been fully established, and it varies widely from agency to agency. The common criteria used for opening includes a modulus of rupture of 300 psi (2.1 MPa) for center-point loading; 250 psi (1.7 MPa) for third-point loading; or 1,000–2,000 psi (6.9–13.8 MPa) for compressive strength of specimens cured similarly to the patch.

- Specified minimum time to opening—In this method, the agency specifies the mix design and curing procedures; then, on the basis of the ambient temperature at placement and slab thickness, the agency sets the minimum time to opening to traffic.

New Developments

Long-term performance and early opening of repair and slab replacement projects are being given greater emphasis today. Many failures of full-depth repairs have been attributed to inadequate load transfer design, poor installation conditions, and poor construction quality. Improvements to both load transfer design and installation procedures have been made. The use of doweled joints has become standard practice for full-depth repairs on heavily trafficked pavements. Proper sawing and sealing of the joints is also important for long-term performance. Rapid slab removal techniques and Fast-Track mixes allow full-depth repairs to be made overnight, or during non-rush hours.

Several factors affect the performance of doweled joints, including the size, number, and method of placement of dowels. Experiments have shown that full-depth repairs perform very well under heavy traffic when five, 1.5-inch (38-mm) dowel bars are placed under each wheel path (Illinois improves 1987). Proper alignment and effective grouting of the dowels are critical to long-term performance of doweled joints. Gang drills are widely used to drill holes for the dowel placement. This is the recommended method of drilling because of the accuracy with which the holes can be drilled and the improved productivity. The recommended method of grouting and placing the dowel is to first deposit the grout (or epoxy) at the back of the hole before inserting the dowel, then twisting the dowel slightly as it is being inserted into the hole. This method has given very good results. The use of plastic grout-retaining disks has also been shown to be very beneficial to achieving good dowel support.

It is now possible to perform full-depth repair of concrete pavements and open the pavement to traffic in 4 hours or less (Munn 1989c; Traffic over Utah 1987; Klemens 1990b). This involves not only the use of Fast-Track mixes, but also rapid techniques for concrete removal and dowel placement. A combination of innovative techniques have been used in New York to make full-depth repairs of concrete pavements overnight on the Long Island Expressway (Klemens 1990b). Slab removal by liftout, the use of gang drills, and a Fast-Track mix were the key elements that made this possible. The maturity concept was used in the Long Island Expressway project to determine strength for opening. Similar techniques have been used by Utah to make full-depth repairs on Interstate 15 (Munn 1989c; Traffic over Utah 1987). Utah used regulated-set portland cement for opening 5 hours after concrete placement.

Projected Future Trends

Early opening is likely to be given greater emphasis for full-depth repair and slab replacement projects in the future. These applications are particularly good candidates for the Fast-Track techniques because there is a greater interest in expediting the repairs and keeping the roadway open to traffic when only a small portion of the roadway is deteriorated, particularly in urban areas. The expanded use and further development of materials, construction techniques, and job control techniques for early opening can be expected.

PCC mixes should remain the principal material for full-depth repairs and slab replacements. Asphaltic materials used in full-depth repairs have not performed very well. Large slab movements, settlement, and rutting have been major problems for repairs made with asphaltic materials. Because of the quantities involved and their typically higher cost, proprietary patching materials are not likely to be used in these applications. It is expected that the high-early strength necessary for early opening will be achieved primarily by using high cement content, low w/c and accelerating admixtures. The concrete mixes for

full-depth repairs and slab replacements may be divided into three categories on the basis of opening time:

- Conventional mixes—In some cases, speed of opening is not critical. Such cases include the repairs and slab replacements carried out in conjunction with larger construction projects and most of the projects in rural areas. Conventional concrete mixes would be perfectly satisfactory in these cases.

- 12- to 24-hour mixes—The 12- to 24-hour opening can be easily achieved by using a high cement content and low w/c, with or without an accelerating admixture. This is basically the mix recommended in Darter, Barenberg, and Yrjanson (1985) for full-depth repairs and slab replacements. Handling and placing this mix do not involve any special techniques.

- 4- to 6-hour mixes—The use of accelerating admixtures is mandatory for 4- to 6-hour mixes. A high-cement-content mix containing 1–2% calcium chloride can produce adequate strength for opening in 4–6 hours. Depending on the ambient temperature and the distance to the batch plant, onsite addition of accelerating admixtures may be necessary for these mixes. Special cement such as regulated-set cement could also be used.

With the increased use of fast mixes, job control is likely to be given greater emphasis to ensure quality and to determine the appropriate time for opening to traffic. Because of the short time periods available, portable cylinder testers will be needed. For Fast-Track mixes, a small difference in curing temperature can make a huge difference in early strength. In an effort to improve accuracy of the sample tests, it is likely that there will be an increase in the use of such devices as temperature-matched curing molds, which simulate the curing condition of the in-place slab. A variety of nondestructive techniques could be employed to test the in-place concrete, including pulse velocity, impact hammers, and maturity monitoring (Darter, Barenberg, and Yrjanson 1985; Snyder, Reiter, and Hall 1989; Sprinkel 1989).

Partial-Depth Repair

Partial-depth repair techniques are used to correct localized surface distresses of concrete pavements. These techniques have been effective for repairing spalls, potholes, and other distresses confined to the upper one-third of the slab. Low-severity d-cracking and alkali reactivity problems near joints have also been repaired successfully by using partial-depth techniques. Partial-depth repairs improve rideability and extend the service life of concrete pavements having surface distresses. When made at the joints, the repairs also provide opportunity for rebuilding and sealing the joints (Transportation Research Board 1979). If used appropriately and constructed properly with a suitable material, partial-depth repairs

will provide good long-term performance. Many existing partial-depth repairs have lasted as many as 10 years without showing any signs of deterioration; most of these repairs are expected to last more than 10 years (Hall et al. 1989).

Summary of Current Technology

Proper usage, construction, and design appear to be extremely important for partial-depth repairs. While good long-term performance of partial-depth repairs has been achieved on many projects, high rates of failure have been observed on many others. Hall et al. (1989) concluded the following from their study of performance of partial-depth repairs:

> *Unless partial-depth repairs are used only for surface distresses and constructed well with durable materials, failure within as little as one year is guaranteed.*

The recommended procedures and criteria for partial-depth repairs are described by Darter, Barenberg, and Yrjanson (1985); in Guidelines for partial-depth repair (1989); and in other technical literature (Snyder, Reiter, and Hall 1989; Hall et al. 1989; Mueller and Zaniewski 1987; Tyson 1977; Zoller, Williams, and Frentress 1989; Darter 1981; Smith et al. 1986).

Distresses Addressed

Proper usage is one of the critical factors that affects the performance of partial-depth repairs. Partial-depth repairs replace deteriorated concrete only. They cannot be used to correct full-depth problems such as working cracks or joints; these problems require either full-depth repair or load-transfer restoration techniques. Partial-depth repairs have been used successfully to repair concrete pavement distresses that are confined to the top few inches of the slab (Darter, Barenber, and Yrjanson 1985; Snyder, Reiter, and Hall 1989; Hall et al. 1989). The distresses normally addressed include the following:

- joint and corner spalling
- scaling
- low-severity d-cracking and alkali-aggregate problems

These distresses are not necessarily surface distresses. It is not uncommon to discover that what appears to be a surface problem actually extends through the full depth of the slab. If damage extends deeper than about the upper one-third of the slab thickness, full-depth repairs should be made. Some agencies have a policy on maximum depth for partial-depth repairs. Illinois allows a maximum depth of removal of 3.5 inches (89 mm) for partial-depth repairs, whereas Pennsylvania allows removal of up to 5 inches (127 mm) (Mueller and Zaniewski 1987).

Materials

A great variety of materials have been used throughout the United States for partial-depth repairs of concrete pavements. The materials range from conventional PCC to exotic proprietary materials (Transportation Research Board 1977; Smith et al. 1991). Numerous studies have been carried out to evaluate suitability and performance of available patching materials (Transportation Research Board 1977; Smith et al. 1986; Smith et al. 1991; Meyer, McCullough, and Fowler 1981; Fowler, Beer, and Meyer 1982; Jordan 1984; Maggenti 1986; Parker, Ramey, and Moore 1984; Parker and Shoemaker 1991; Temple et al. 1984). The latest of such studies was conducted by Smith et al. (1991) under the SHRP H-105 project. Smith et al. (1991) present a comprehensive listing of materials that have been used for concrete pavement patching. Along with the description, usage and performance information are given for each material discussed in the report.

In terms of performance, exotic proprietary materials offer only a marginal advantage over conventional PCC mixes (Transportation Research Board 1977; Smith et al. 1991). PCC mixes also offer the advantages of low cost and material compatibility with the existing substrate. Proprietary patching materials are expensive; the cost of prepackaged patching materials ranges from four to twenty times the cost of conventional PCC (Smith et al. 1986; Smith et al. 1991; Meyer, McCullough, and Fowler 1981). In exchange for the high cost, the proprietary materials often offer very fast setting time and better performance at low temperatures and under other adverse conditions. At temperatures below 40° F (4.4° C), the use of PCC is not recommended; below 55° F (12.8° C), PCC requires a longer curing period. Other than quick fixes with bituminous materials, some of the proprietary patching materials are the only materials that offer opening to traffic less than 1 hour after placement.

Several factors should be considered in selecting a repair material. These include the available lane closure time; the prevailing environmental conditions, available funds, and size, depth, and number of patches (Smith et al. 1986). Conventional PCC mixes are used when the patch area can be closed to traffic for 24 hours or more. For rapid opening to traffic, Type III cement mixes, with or without accelerators, have been used longer and more widely than most other materials (Snyder, Reiter, and Hall 1989). Opening to traffic in 4 hours from time of placement is possible with this type of mix. When opening to traffic in less than 4 hours is required, proprietary materials are used. Epoxy resin mortars and epoxy concrete have been used with excellent results. Available epoxy products have a wide range of setting time. Bituminous materials are also widely used for both temporary and permanent patching of concrete pavements.

The performance of proprietary patching materials is highly sensitive to construction procedures and ambient temperature. It is extremely important that the manufacturer's recommendations regarding handling, mixing, placement, consolidation, finishing, and curing are followed exactly for success with the proprietary materials (Snyder, Reiter, and Hall 1989; Mueller and Zaniewski 1987; Smith et al. 1986).

Construction

Selection of Repair Boundaries. The areas of unsound concrete often extend well beyond the limits of visibly distressed areas. These areas may have a firm surface, but if left alone, spalling will eventually occur. The existence and extent of unsound concrete near spalls and joints are most commonly determined by sounding the concrete with a solid steel rod, chains, or a ball peen hammer (Snyder, Reiter, and Hall 1989; Gulden and Thornton 1984; Guidelines for partial-depth repair 1989; Mueller and Zaniewski 1987; Tyson 1977). The delaminated, or unsound, areas are indicated by a dull or hollow sound, whereas the sound concrete is indicated by a sharp metallic ring. Sophisticated sounding equipment is also commercially available.

It is recommended that the repair limits be set at least 3 inches (76 mm) outside of the identifiable unsound areas to ensure that all unsound concrete is removed. Repair boundaries are also kept square or rectangular because irregular shapes tend to cause cracking of the patch material (Guidelines for partial-depth repair 1989). Repair areas less than 2 feet (0.6 m) apart are combined to reduce overall cost of repair. Some states found that if more than 40% of the joint requires repair, it is cheaper to repair the entire joint (Zoller, Williams, and Frentress 1989).

Concrete Removal. The removal of deteriorated concrete is usually accomplished by chipping with jackhammers (Darter, Barenberg, and Yrjanson 1985; Snyder, Reiter, and Hall 1989; Gulden and Thornton 1984). Other methods being used include cold-milling and waterblasting.

Almost all states require a partial-depth cut along the perimeter of the removal area when the sawing and chipping method is used. The recommended cut depth is 2 inches (51 mm) (Darter, Barenberg, and Yrjanson 1985). Additional cuts are often made within the repair area to facilitate the removal process. The deteriorated concrete is removed by using light to medium pneumatic or chipping hammers. Most states limit the size of pneumatic hammer allowed for this type of work because the use of heavy pneumatic hammers will damage surrounding concrete. The maximum size of pneumatic hammer allowed in most states is 30 pounds (13.6 kg); near the boundaries, the use of 15-pound (6.8-kg) hammers is recommended. Some states allow the use of 45-pound (20.4-kg) hammers, but limit the maximum number of blows per minute or the maximum air pressure (Mueller and Zaniewski 1987).

Several states allow concrete removal by cold-milling (Darter, Barenberg, and Yrjanson 1985; Snyder, Reiter, and Hall 1989; Gulden and Thornton 1984). This method is used almost exclusively by contractors in Minnesota (Zoller, Williams, and Freutress 1989). Cold-milling is especially efficient when the repair area extends across the entire lane width, or a majority of the lane width. After milling, the bottom of the repair area is checked by sounding to ensure that all unsound material has been removed. Cold-milling produces nonvertical, tapered edges. Although the experience with "feathered edge" has

been generally poor, the tapered edges produced by cold-milling have performed extremely well (Guidelines for partial-depth repair 1989).

Waterblasting is also allowed in some states (Mueller and Zaniewski 1987). Water pressures as high as 10,000 psi (69 MPa) are used to blast away the unsound material. This method is effective in removing all unsound material without causing damage to the underlying sound material. Recently, however, it was observed that this method does not work very well with mixes containing large aggregate and dense mixes. In waterblasting, high-pressure water cuts through the cement matrix to dislodge the unsound material; therefore, enough matrix material must be present for this method to work effectively. One drawback to this method is that it leaves the surface wet. This is a problem for most (but not all) patching materials. Illinois requires complete drying of the waterblasted area before the patch is placed.

If during the concrete removal it is found that the unsound concrete extends deeper than about one-third of the slab thickness, a full-depth repair is required. Small areas of full-depth repairs have been combined with partial-depth repairs on some of the projects, but these repairs generally did not perform as well as regular full-depth repairs (Snyder, Reiter, and Hall 1989).

Surface Preparation. After concrete removal, the repair area is cleaned by sandblasting, followed by airblasting, to remove any loose particles and contaminants. Waterblasting can also be used, but better results have been obtained with sandblasting. Any contamination of the surface reduces the bond between the repair material and the base slab, which is critical to the success of partial-depth repairs (Darter, Barenberg, and Yrjanson 1985).

Joint Preparation. Partial-depth repairs placed adjacent to existing joints or cracks require special construction preparation. It is extremely important that partial-depth repairs do not come in direct contact with the adjacent slabs. This creates a point-bearing situation that often results in compression failures of the repairs at transverse joints or cracks, and spalling at longitudinal or shoulder joints. Inadequate preparation of joints has been a major cause of partial-depth repair failures (Darter, Barenberg, and Yrjanson 1985; Snyder, Reiter, and Hall 1989; Guidelines for partial-depth repair 1989; Mueller and Zaniewski 1987; Tyson 1977).

Isolation of the repair at longitudinal or shoulder joints is normally achieved by inserting a polyethylene strip along the joint before placing the repair material. At transverse joints, a strip of styrofoam or asphalt-impregnated fiberboard is placed before the repair material is placed. It is important to work the strip down into the crack so that the incompressible repair material does not restrict slab movement. For some of the flexible (epoxy) repair materials, repair isolation does not appear to be necessary.

Bonding Agent. PCC and some of the proprietary patching materials require the use of a bonding agent to bond the material to the existing pavement. With PCC mixes, excellent

results have been obtained by using a sand-and-cement grout as a bonding agent when the repairs could be protected from traffic for 24–72 hours (Snyder, Reiter, and Hall 1989). The grout is applied, either by brushing or spraying, just before the patching material is placed. Epoxy has also been used successfully as a bonding agent, with both PCC and proprietary patching materials, to reduce curing time to 6 hours or less.

Material Placement. Proprietary patching materials must be mixed and placed according to the procedures specified by the manufacturers. It is extremely important that these procedures are followed exactly; many repair failures have resulted from not following the proper installation procedures.

PCC mixes for partial-depth repairs are usually mixed onsite, using a small drum or paddle-type mixers, and placed using hand tools (Snyder, Reiter, and Hall 1989; Guidelines for partial-depth repair 1989). The material is placed to slightly overfill the repair area, and then consolidated and screeded. Consolidation is most often achieved using internal vibrators with small heads (less than 1 inch [25 mm]). On very small repairs, the repair material is consolidated by rodding or tamping and cutting with hand tools.

A stiff board resting on the adjacent pavement is usually used as the screed on partial-depth repairs. Experience has shown that the direction of finishing affects the performance of partial-depth repairs (Guidelines for partial-depth repair 1989). The recommended direction of finishing is from the center to the repair boundaries, and against the grade, if any exist. This process pushes the material against the boundaries to promote better bonding. Keeping the material evenly leveled off at a grade has been a problem with some of the low-viscosity materials. After finishing, the repair area is textured to approximately match the texture of the surrounding concrete.

Curing. Partial-depth repairs are particularly susceptible to rapid moisture loss because of their high surface-area-to-volume ratio (Snyder, Reiter, and Hall 1989; Guidelines for partial-depth repair 1989; Tyson 1977). Hence, adequate curing is very important to their performance. Proprietary materials should be cured as specified by the manufacturer. For PCC mixes, applying white-pigmented curing compound as soon as the bleed water has evaporated from the surface has been most effective. The use of wet burlap with polyethylene sheeting is not as effective in hot weather because shrinkage cracking can occur from rapid loss of moisture when the sheeting and burlap are removed for opening to traffic (Tyson 1977). Insulation blankets can be used for more rapid curing in cold weather, and for early opening.

Sealing. For cementitious materials, sealing the patch-slab interface is an important procedure that is often ignored (Guidelines for partial-depth repair 1989; Jordan 1984). The use of a 1:1 cement-water grout along the patch perimeter is recommended to form a moisture seal over the interface. Experience has shown that this procedure is effective in preventing delamination of the patch.

Joint Resealing. Partial-depth repairs made at the joints provide straight edges that can be sawed and sealed to extend the service life of the concrete pavement. Resealing the joints is highly recommended. Normal joint sealing procedures and materials can be used.

New Developments

As with reconstruction projects and full-depth repairs, rapid construction and long-term performance of partial-depth repairs are given high priority. Inappropriate usage, design, materials, and construction practices as well as poor quality control have caused most partial-depth repair failures. Most of these problems are easily correctable, and guidelines for partial-depth repairs that address these problems have developed. Following the recommended procedures and criteria has resulted in good performance of partial-depth repairs over the past several years.

Recent developments in partial-depth repairs consist primarily of the use of Fast-Track mixes and proprietary rapid-setting materials. Fast-Track mixes are widely accepted by most states; however, the states are divided on the use of proprietary rapid-setting materials. The long-term performance of rapid-setting materials varies widely and appears to be highly sensitive to the local conditions. Some states have had less than satisfactory experience with the proprietary rapid-setting materials, whereas others now use them routinely (Mueller and Zaniewski 1987). The states using proprietary rapid-setting materials have developed laboratory test and field performance standards, and accept or reject products accordingly.

A comprehensive review of materials used for partial-depth repair of concrete pavements has been conducted under SHRP H-105 (Smith et al. 1991). The following nine patching materials were selected from the study for field evaluation under SHRP H-106.

- Type III PCC
- MC-64—Epoxy
- Duracal—Gypsum-based concrete
- Percol—Urethane concrete
- Set-45—MPC
- Five-Star Highway Patch—HAC
- SikaPronto 12—High-molecular-weight methacrylate
- Sylvax UPM—Modified/proprietary bituminous cold mix
- Pyrament 505—Hydraulic cement concrete

These materials are being tested under four different climatic conditions: wet-freeze, dry-freeze, wet-nonfreeze, and dry-nonfreeze. The installation of these repair materials has been completed, and their performance will be monitored over a 2-year period.

Significant new developments in the construction practice of partial-depth repairs include the use of cold-milling and waterblasting for concrete removal, and experiments with repair

placement with minimal surface preparation. Several states, most notably Minnesota, now allow the use of cold-milling for concrete removal. Cold-milling can significantly facilitate concrete removal, especially if the entire lane width needs repair (Zoller, Williams, and Frentress 1989; CPR in record time 1987). Excellent results have been obtained with this method. Waterblasting is also allowed in some states. These processes are being evaluated under SHRP H-106. The ability to perform repair work with minimal surface preparation has obvious implications to rapid repairs. Some of the low-viscosity repair materials show potential for placement with minimal surface preparation and under adverse conditions. These materials and procedures are also being evaluated under SHRP H-106.

Projected Future Trends

The future developments in partial-depth repairs of concrete pavements is likely to focus on rapid-setting materials, and the methods of job control and verification for these materials. The quick setting time is particularly important for partial-depth repair applications because only a limited interruption to traffic is often possible for this type of repair. The material properties that allow placement of the repairs with minimal surface preparation and under adverse conditions are also considered important for rapid repairs. Many proprietary rapid-setting materials are currently available, but the factors affecting the long-term performance of these materials have not yet been satisfactorily established. The results of SHRP H-106 are expected to be invaluable toward this end.

For partial-depth repairs, three classes (as classified in terms of opening time) of materials will be needed:

- Conventional 7-day mixes—The speed of opening may not be critical for the repairs carried out in conjunction with larger construction projects, and for most of the projects in rural areas. Conventional concrete mixes would be perfectly satisfactory for these applications.

- 4- to 24-hour mixes—When there is no daily rush hour, 4- to 24-hour mixes could be used with overnight closure. The 4- to 24-hour opening can be achieved by using a high cement content and low w/c with or without an accelerating admixture.

- Less than 4-hour mixes—Very fast mixes are needed when the work must be completed within one 8-hour shift. This class of material will consist primarily of proprietary rapid-setting materials.

Practical methods of determining the quality of partial-depth patches are also expected to be given more attention in the future. This is especially true because many states are now moving toward adopting performance-related specifications. Performance-related specifications are viewed as more conducive to allowing the contractors to be more

innovative. The quantities that should be verified to ensure durability include air content, bond strength, and consolidation. The verification methods would have to involve NDT and tests on as-delivered material, because reclosure of the area for verification testing would not be practical in most cases.

Overlays

Concrete overlays are placed on existing pavements to improve structural capacity, correct surface deficiencies, or extend service life. Both concrete and asphalt pavements can be overlaid with concrete. The precedent for overlaying existing pavement with concrete goes back at least to 1913; however, widespread use of concrete overlays did not begin until the 1970s because of their high initial cost and construction complexity (Hutchinson 1982). The improvements in paving equipment and the trend toward selection of resurfacing type on the basis of life-cycle costs, rather than initial costs, has led to increased usage of concrete overlays. More recent developments in concrete technology include the development of Fast-Track mixes and ZCPs, which make concrete overlays competitive with asphalt on projects in which the speed of construction, the ability to pave under traffic, or both are primary considerations.

Summary of Current Technology

Concrete overlays for highway pavements are either bonded or unbonded. The condition of the existing pavement determines, to a large extent, what type of overlay is appropriate for a given project. Unbonded overlays require only minimal preoverlay repairs; hence, this is a particularly effective rehabilitation technique for extensively deteriorated pavements. If the existing pavement is in good condition, a bonded concrete overlay can be placed to economically improve its structural capacity or surface quality. This is a relatively new technology that is gaining popularity. Bonded overlays have been the focus of much recent research and developments in concrete overlays.

Unbonded Concrete Overlays

Unbonded concrete overlays, either jointed plain or jointed reinforced, are the most common types of concrete overlays in use today (Yrjanson 1988). They have been used successfully to rehabilitate extensively deteriorated pavements and to improve the structural capacity of existing pavements. The principal advantage of unbonded overlays is that they require only a small amount of preoverlay repairs. Only major structural distresses, such as shattered slabs or punchouts, need be repaired before overlaying (Hutchinson 1982; Voigt, Carpenter, and Darter 1989; Guidelines for unbonded concrete overlays 1990). A

separation layer, or bond breaker, is placed on top of the existing pavement to isolate the overlay and prevent reflective cracking.

The construction methods for unbonded overlays are the same as those for new pavements. Nationwide, the thickness of unbonded concrete overlays ranges from 6 to 12 inches (152 to 305 mm), depending on traffic and the condition of the underlying pavement (Yrjanson 1988). Structurally, an unbonded overlay behaves like a new pavement constructed on a very high modulus base.

Preoverlay Repair. The following distresses are normally addressed before overlaying with unbonded concrete overlays (Hutchinson 1982; Voigt, Carpenter, and Darter 1989; Guidelines for unbonded concrete overlays 1990):

- Joint deterioration—High-severity spalling at existing pavement joints are filled and compacted with asphalt concrete (AC) patching mix. If the deterioration extends through the entire slab thickness, full-depth replacement with concrete is recommended.

- Broken slabs—Badly shattered slabs are replaced full-depth or stabilized with undersealing.

- Unstable slabs—Slabs with large deflections or pumping problems are replaced full-depth or undersealed.

- Faulting—Faulting greater than 0.25 inch (6.4 mm) is removed when thin-layer separation material is used. Faulting is not a problem when a thick separation layer (usually 1 inch [25 mm] AC) is used.

- Punchouts—Punchouts on CRC require full-depth replacement.

If the existing pavement is asphalt, the following distresses should be addressed (Guidelines for concrete overlays of existing asphalt pavements 1991):

- Severe rutting or shoving—Severe surface distortions (rut depth greater than about 2 inches [51 mm]) are either milled off or leveled by placing a leveling course.

- Potholes—Potholes should be filled with crushed stone, cold mix, or hot mix.

- Subgrade failure—Areas of failed subgrade and base are removed and replaced.

Some states have used crack and seating or rubblizing techniques in lieu of preoverlay repairs to provide uniform support for the overlay (Guidelines for unbonded concrete overlays 1990). Typically, the projects involved severely deteriorated pavements with

major structural problems. The performance of sections constructed by using these techniques has been good.

Separation Layer. The separation layer isolates the unbonded overlay from the underlying pavement to prevent reflection cracking of the overlays. Numerous types of materials are used as the separation material. The thickness of the layer ranges from 6 mils (0.15 mm) for polyethylene sheeting to 1–1.5 inches (25–38 mm) for an AC leveling course (Voigt, Carpenter, and Darter 1989). The appropriate material and thickness of the layer depends on the condition of the existing pavement and the amount of preoverlay repairs made.

The most commonly used separation layer material is hot-mix AC containing conventionally graded aggregate (Hutchinson 1982; Voigt, Carpenter, and Darter 1989; Guidelines for unbonded concrete overlays 1990). A uniformly graded sand has also been used successfully as the aggregate in the AC mix for this application. A layer of hot-mix AC, 1–1.5 inches (25–38 mm) thick, can effectively isolate the overlay from the base slabs and can also serve as a leveling course to smooth undulations and surface roughness for the paving operation. This is the recommended material when the underlying pavement has numerous cracks and faulting greater than 0.2 inch (5 mm) at the joints.

Bituminous surface treatment materials have also been used successfully as separation layer materials. These include slurry seals and cutbacks or emulsified asphalt with a sand cover. They are thin-layer materials that can be used when surface roughness either is not present in the existing pavement or has been removed during preoverlay repair.

Other materials that can be used as separation materials include lean concrete, polyethylene sheeting, heavy roofing paper, and curing compound. Lean concrete is currently being used in Germany as standard practice (Voigt, Carpenter, and Darter 1989). This layer is used as a leveling course and to provide an increased cross-slope. The use of lean concrete must be carefully considered because it involves using curing compound to prevent bonding between the overlay and the lean concrete layer. Polyethylene sheeting, roofing paper, and curing compound have not performed well as separation layer material (Voigt, Carpenter, and Darter 1989; Guidelines for unbonded concrete overlays 1990). The poor performance has been attributed to the inadequate thickness of the materials to effectively isolate the two layers.

Before the separation material is placed, all joints in the existing pavement are resealed, and loose material is removed from the pavement surface. Resealing the joints is recommended to help prevent moisture from penetrating the subbase of the existing pavement, causing loss of support problem for the overlay (Voigt, Carpenter, and Darter 1989). Liquid asphalt sealants are recommended for this application.

When the temperature of the bituminous material used as the separation layer is expected to exceed 110° F (43.3° C), the application of whitewash is recommended on the bituminous separation layer before the concrete is placed (Yrjanson 1988; Hutchinson 1982; Voigt,

Carpenter, and Darter 1989; Guidelines for unbonded concrete overlays 1990). Whitewash consists of either white-pigmented curing compound or lime slurry. Studies have shown that whitewash reduces surface temperature by 20–30° F (11.1–16.7° C) (Yrjanson 1988; Guidelines for unbonded concrete overlays 1990). Whitewash prevents excessive heat buildup of the separation material, which can cause shrinkage cracking in the concrete overlay.

Overlay Construction. Construction of unbonded concrete overlays does not involve any special techniques. Conventional concrete paving procedures are used, and reinforcement and dowels are provided for as required. The transverse joints in the overlay pavements are deliberately mismatched to place the overlay joints over the continuous portion of the base concrete, which will then act as a sleeper slab to help maintain good load transfer across the joints (Voigt, Carpenter, and Darter 1989). Because of this support, faulting tends to be much less of a problem for unbonded concrete overlays than unoverlaid pavements. Dowels at the transverse joints are needed only for jointed reinforced overlays, unless the traffic is very heavy (greater than 0.5 million 18-kip [80 kN] ESALs per year) (Peshkin et al. 1990). The overlay thickness should be at least 6 inches (152 mm), if dowels are being used. The joints in unbonded overlays are cut and sealed, using the same procedure and materials used for new pavements.

Unbonded concrete overlays require shorter joint spacing than normal concrete pavements. The overlay slabs are exposed to a greater thermal gradient, and very stiff support provided by the underlying slabs contributes to greater curling stresses in the slabs (Voigt, Darter, and Carpenter 1989). To prevent cracking due to curling stresses, either shorter joint spacing or reinforcement must be provided. Studies have shown that L/l, as determined with the following equation, should be kept less than 7 (4.5 is desirable):

$$L/el = \frac{L}{(E*h^3/12*(1-kmu^2)*k)^{1/4}}$$

Where

l = radius of relative stiffness, inches
L = slab length (joint spacing), inches
E = concrete modulus of elasticity, psi
h = slab thickness, inches
μ = Poisson's ratio
k = modulus of subgrade reaction, psi/inch

The L/l of 7 results in joint spacing, in feet, of approximately 1.6 to 1.9 times the slab thickness in inches. As a rule of thumb, the joint spacing, in feet, less than 1.75 times the slab thickness, in inches, is recommended (Voigt, Carpenter, and Darter 1989).

The construction of unbonded overlays requires the construction of new shoulders. Tied concrete shoulders are provided with many of the newly constructed overlays. A concrete shoulder tied to the mainline pavement significantly reduces the maximum deflection and stresses at the slab edge, and reduces infiltration of water at this joint, resulting in significantly improved performance and reduced maintenance.

Bonded Concrete Overlay

Bonded concrete overlays are used to improve the structural capacity or the surface qualities of existing PCC pavements. These are relatively thin overlays (3–6 inches [76–152 mm]), bonded to the existing concrete pavement to achieve monolithic behavior. Normally, they are considered only for existing pavements in good overall condition without any concrete durability problems. Both existing jointed concrete as well as CRC pavements can be overlaid with a bonded concrete overlay. Various methods are used to prepare the surface of the existing pavements to assure a clean surface for bonding. The two most commonly used methods are cold-milling and shotblasting (Yrjanson 1988). Different types of bonding agents are also used to promote bonding. If properly used and constructed, bonded concrete overlays can significantly improve performance, as well as extend the service life of existing concrete pavements (Peshkin et al. 1990; Tayabji and Ball 1986).

Preoverlay Repairs. Bonded concrete overlays require significantly more preoverlay repairs than do unbonded or AC overlays. If placed without adequate preoverlay repairs, bonded concrete overlays deteriorate at an accelerated rate. The following distresses should be repaired before a bonded concrete overlay is placed (Snyder, Reiter, and Hall 1989; Hutchinson 1982; Voigt, Carpenter, and Darter 1989; Peshkin et al. 1990; Guidelines for bonded concrete overlays 1990):

- Shattered slabs, joint deterioration, and cracks—The slabs exhibiting these distresses are either repaired full-depth or replaced. The joint deterioration problems that require full-depth repair include corner breaks, major spalling, and blow-ups. Partial-depth repair techniques can be used for partial-depth spalls. An alternative repair method for working longitudinal cracks is cross-stitching. This involves drilling holes on a 35° angle through the crack and grouting in No. 6 (19-mm) deformed reinforcing bars. The holes are spaced at 30 inches (762 mm), and the drilling direction is alternated so that the holes intersect the crack at mid-depth. The use of reinforcement across working cracks has not been effective in preventing reflection cracking.

- Faulting—Faulted joints will be somewhat smoothed during the surface preparation and paving operation. If faulting is greater than 0.15 inch (4 mm),

a survey to determine pumping and loss of support is recommended. Subdrainage may be added to reduce erosion beneath the slab and subsequent faulting.

- Pumping and loss of support—Unstable slabs are either replaced or stabilized by filling the voids beneath the existing slab with grout.

- Open joints—Open joints are sealed before the surface is prepared, to prevent infiltration by incompressibles during cleaning and paving operations.

Surface Preparation. The bond between the overlay concrete and the base slabs is essential for good performance with bonded concrete overlays. To achieve bond, the pavement must be thoroughly cleaned to remove all foreign matter and contaminants from the surface. The following methods are currently used for surface preparation (Snyder, Reiter, and Hall 1989; Hutchinson 1982; Voigt, Carpenter, and Darter 1989; Peshkin et al. 1990; Guidelines for bonded concrete overlays 1990):

- Shotblasting—Shotblasting equipment hurls steel shot at the pavement under a housing unit to remove a thin layer (about 1/8 inch [3.2 mm]) at the surface. The shot is recycled, and the material removed is vacuumed for disposal, leaving the surface free of loose material and dust. This equipment is capable of removing all surface contaminants, except bituminous materials. When this type of equipment is used, it is recommended that backer rods be installed in all open joints to prevent the shot from getting lodged in the joints. Although this equipment leaves a very clean surface, a secondary cleaning with a sandblaster just before paving is highly recommended.

- Cold-Milling—Milling machines can be used when deeper removal is required. This equipment is capable of removing all contaminants and loose materials. Removal of the old surface, to depths necessary to provide uniform profile, cross-slope, and surface texture is possible with milling equipment. The existing surface is typically removed to depths of 0.25–1.0 inch (6.4–25 mm). With cold-milling, a secondary cleaning is required.

- Sandblasting—This method is recommended as a secondary cleaning operation only. Sandblasting removes an additional 1/32–1/16 inch (0.8–1.6 mm) from the surface. This method has been used as the primary surface preparation technique; however, shotblasting and cold-milling provide more consistent results.

- Waterblasting—This method has not been used successfully as a primary surface preparation technique. It can be used as a secondary cleaning technique, but it requires extra time to allow for the complete drying of the prepared surface before paving can begin.

- Airblasting—The pavement surface is airblasted just before overlaying to thoroughly remove debris from the milling or sandblasting operation. This operation is performed just ahead of the paving operation to prevent the contaminants from resettling.

Both shotblasting and cold-milling have been used successfully for surface preparation. Shotblasting is the preferred method of surface preparation because it does not damage the concrete as much as cold-milling does; however, cold-milling is more effective in removing extensive surface contaminants. Studies have shown that shotblasting generally gives better performance than cold-milling (Suh et al. 1988; Solanki, McCullough, and Fowler 1987).

Placing Bonding Agents. Although the effectiveness of, or the need for, bonding agents has not yet been conclusively established, the common practice is to use a bonding agent. The results from several studies have shown that the bond strength of overlays placed without a bonding agent is higher than that of overlays placed with a bonding agent (Guidelines for bonded concrete overlays 1990; Suh et al. 1988; Solanki, McCullough, and Fowler 1987; Kaler, Lane, and Johnson 1986). Nevertheless, the use of bonding agents is still recommended because more reliable results are obtained. Numerous factors affect the bond strength between the overlay concrete and the base slabs, including moisture, surface texture (determined by the equipment used for surface preparation), vibration, and temperature at the time of placing (Suh et al. 1988; Solanki, McCullough, and Fowler 1987; Koesno et al. 1988). The bond strength is more sensitive to these factors when bonding agents are not used. Whether or not a bonding agent is used, moisture has a detrimental effect on bond strength. It is strongly recommended that the bonding agents (or the overlay concrete, if bonding agents are not used) be applied only on completely dry pavement surfaces.

A neat cement grout, consisting of cement and water (maximum w/c, 0.62), is widely used as a bonding agent. In a typical operation, a mechanical spraying device sprays the grout a short distance ahead of the paver. The spraying operation is performed just ahead of the paving operation to prevent drying of the grout, which is detrimental to bonding. A maximum distance of 8 feet (2.4 m) between paving and spraying operations is recommended (Voigt, Carpenter, and Darter 1989; Peshkin et al. 1990; Guidelines for bonded concrete overlays 1990). If dried grout is encountered, the paving operation must stop, and the dried material must be removed. Either shotblasting or sandblasting can be used to remove this material.

Sand-cement-water grout and epoxy have also been used successfully as bonding materials. The sand-cement-water grout is applied with a stiff brush or broom in a thin, even coating. The recommended thickness of the coating is 0.06–0.25 inch (2–6 mm). The use of epoxy resin materials as bonding agents is relatively new in bonded concrete overlay applications. Laboratory bond strength values for liquid epoxy materials have been rated at more than 5,000 psi (34.5 MPa) (Voigt, Carpenter, and Darter 1989; Peshkin et al. 1990); a bond strength of 200 psi (1.4 MPa) is considered adequate to maintain bond. The advantage of

epoxy materials is that they have a moderate working life in hot environments; thus, they offer a possible solution to the construction problems with early grout drying. Whenever a new material is being considered for use as a bonding agent, laboratory testing of shear strength is recommended.

Overlay Construction. Concrete placing is not substantially different for bonded concrete overlays than for new construction; however, there are a few construction details that are unique to bonded overlays. Because of the thin overlays, generally smaller top-size aggregate is used for bonded concrete overlays. For overlays 3–4 inches (76–102 mm) thick, a 0.375- to 0.5-inch (10- to 13-mm) top-size aggregate is used. Unlike new construction, all cross-level and profile adjustments for bonded overlays must be made by varying the overlay thickness. To maintain the minimum design thickness, all adjustments are made by adding thickness. Keeping the prepared surface clean while operating construction vehicles over it also presents a special problem. Concrete supply trucks, or any other vehicles operating on the prepared surface, are fitted with "diapers" to prevent oil and grease from dripping onto the prepared surface (Guidelines for bonded concrete overlays 1990).

The most critical aspect of bonded concrete overlay construction is curing (Voigt, Carpenter, and Darter 1989; Peshkin et al. 1990; Guidelines for bonded concrete overlays 1990; Koesno et al. 1988). Shrinkage of the overlay concrete during the early curing stage has been a problem on some projects. High shear stresses can develop at the interface as a result of excessive shrinkage, which can result in bond failures. In most normal weather conditions, good results have been obtained with a curing compound applied at 1.5 to 2.0 times the normal rate. Under extremely hot, dry, and windy conditions, more effective curing measures are required. These include wet burlap, polyethylene sheeting, and fogging the surface. Placement of bonded concrete overlays is not recommended during extremely hot weather.

Periods of large temperature changes during bonded concrete overlay construction can be extremely detrimental because the temperature changes may adversely affect bonding. A large temperature drop from day to night, when the concrete has not gained strength sufficient enought to resist thermal stresses, can cause cracking and debonding, particularly at slab corners (Neal 1983). The use of thermal blankets is recommended when bonded overlays are placed under these conditions. Joints on bonded concrete overlays are sawed as early as possible, directly over the joints on the base slabs. All joints, including those created by making full-depth repairs before overlaying, are carefully marked and sawed (Hutchinson 1982; Voigt, Carpenter, and Darter 1989; Peshkin et al. 1990; Guidelines for bonded concrete overlays 1990). A tolerance of 1 inch (25 mm) to either side of the existing joint is considered acceptable. For overlay thicknesses of 4 inches (102 mm) or less, the joints are sawed the full depth of the overlay, plus an additional 0.5 inch (13 mm) to ensure that the full thickness is cut. For thicker overlays, the recommended depth of sawing is one-third the nominal thickness of the overlay, or a minimum depth of 3 inches

(76 mm). Any expansion joints on existing pavement are specially marked and replicated on the overlay. The joints are sealed by using conventional methods and materials.

New Developments

There has been a significant increase in the use of concrete overlays, beginning in the early 1970s (Hutchinson 1982). The increased popularity of concrete overlays has been attributed largely to improvements in construction equipment and procedures and to the excellent performance given by the concrete overlays constructed to date. Recent technical developments, such as the development of ZCPs and Fast-Track mixes, make it possible to pave while maintaining traffic in adjacent lanes and on shoulders and minimizing downtime due to construction. Other significant developments include the development of new surface preparation equipment for bonded concrete overlays and experiments with new materials for both overlays and interlayers (bond breakers for unbonded overlays, and bonding agent for bonded overlays).

Although unbonded concrete overlays do not require a great deal of preoverlay repairs, more emphasis is given to the evaluation and preparation of the existing pavement. Experience has shown that locating and repairing localized low-strength areas in the existing pavement results in much better performance and a longer service life of the overlay. The selection of materials and the thickness of the bond-breaking layer is also being given more attention. Several new materials have been adopted as bond breakers for unbonded overlays, including slurry seals and cutbacks or emulsified asphalt with a sand cover. These are thin-layer materials that can be used when surface roughness is either not present in the existing pavement or has been removed during preoverlay repair. The use of AC- or portland-cement-stabilized open-graded materials has also been suggested. These materials have not been used for overlays but have been used for new construction with good success (Voigt, Carpenter, and Darter 1989; Peshkin et al. 1990).

The practice of overlaying existing asphalt pavement with concrete (whitetopping) is on the rise. Either the existing asphalt pavement is milled, or a leveling course is placed to remove rutting and other surface distortions before overlaying.

Many states are now building bonded concrete overlays (Bonded concrete inlay 1990; Hendrickson 1986; Johnston 1986; Obuchowski 1983; Munn 1989a; Texas goes thin-bonded 1986; Kansas joins the ranks 1987; Overlays 1990; Crawley and Sheffield 1983). This is a very recent development. In 1986, a Fast-Track mix was used to resurface a 7-mile (11.3-km) section of U.S. Highway 71 in Buena Vista County, Iowa with a bonded concrete overlay, opening to traffic in 24 hours (Henrickson 1986). This project was also constructed one lane at a time, using ZCPs to allow local traffic in the adjacent lane. This practice is now widely used in overlay construction as well as in reconstruction projects to alleviate traffic congestion problems. Even without using Fast-Track technology, rapid construction is given greater emphasis. Missouri completed its first bonded concrete

overlay project in 1986. The 8-mile (12.9-km) section of U.S. Route 67 in Jefferson County, Missouri, was overlaid with 4-inch (102-mm) bonded concrete in 16 days.

Since the introduction of bonded concrete overlays on highway pavements in 1973, much progress has been made in reducing the construction cost of bonded overlays. With the advent of shotblasting machines, surface preparation costs have decreased from more than $4.00/yd^2 to less than $1.42/yd^2 (Kaler, Lane, and Johnson 1986). The use of either cold-milling with a secondary cleaning by sandblasting or shotblasting has become a standard practice for surface preparation.

Because achieving bond is so critical to bonded concrete overlays, it has been the subject of many studies. Surface preparation, vibration, moisture, temperature at the time of placing, and curing have been identified as the significant construction variables that affect bonding. Several studies have shown that with good, clean, dry surfaces, the bond between the overlay concrete and the base slabs can be achieved without bonding agents; however, the use of bonding agents is still recommended (Solanki, McCullough, and Fowler 1987; Koesno et al. 1988).

Several new materials have been tested for use in bonded concrete overlays. These include liquid epoxy for use as a bonding agent (Voigt, Darter, and Carpenter 1986), and steel fiber reinforcements for overlay concrete. In hot, dry climates, the drying of bonding grout poses a special problem for bonded concrete overlay construction. The liquid epoxy materials have shown potential for providing improved bonding in this type of climate. Steel fibers have been used in an effort to reduce shrinkage cracking and to improve bonding (Chanvillard, Aitcin, and Lupien 1989; Verhoeven 1989). The results with the steel fibers have been promising, but their economic feasibility needs further evaluation.

Projected Future Trends

Fast-Track paving is expected to have the most significant impact on concrete overlays. Already, reopening in 12–24 hours is possible with Fast-Track mixes consisting of only conventional materials (high cement content, low w/c). Fast-Track mixes would be particularly advantageous for thin bonded overlays placed in adverse climatic conditions (areas with large temperature changes). The rapid-early strength gain properties of Fast-Track mixes will give the overlay concrete the chance to develop enough strength to resist thermal stresses. With Fast-Track mixes, it is also possible to overlay short sections overnight and open lanes to traffic in time for the morning rush. This method is being used in California to overlay the busiest sections of freeway.

With greater emphasis placed on keeping the roadway open to traffic during busy hours, more night placement of concrete can be expected. Already, many agencies perform patch work overnight, between 6:00 P.M. and 6:00 A.M. In general, night placement is beneficial for concrete. Moisture loss in hot weather is less of a problem at night, and temperature

changes from nighttime to day would not cause shrinkage cracking. Some modifications to construction practice to accommodate nighttime conditions and additional studies to determine bond characteristics of bonded overlays placed at night may be necessary.

The ability to pave while keeping traffic in adjacent lane(s) and fast reopening are much more critical for overlay construction than for either new construction or reconstruction. Paving while maintaining traffic in adjacent lanes and on the shoulder is already a standard practice in concrete paving. This practice, in combination with Fast-Track technology, should result in increased use of concrete in time-critical applications. For concrete overlays, Fast-Track mixes for opening in 12–24 hours of placement appears to be most applicable. The use of Fast-Track is still limited largely to experimental and demonstration projects; however, this is a proven technology, and increased usage seems inevitable. With these developments, the trend toward increased use of concrete overlays can be expected to continue.

Concrete Recycling

The recycling of PCC pavements is an innovative technology that is rapidly becoming an accepted, standard highway practice. Concrete recycling has proven to be both economically and environmentally advantageous, and excellent quality concrete can be produced by using recycled concrete as aggregate. Significant savings in material transportation and disposal costs are possible through recycling, particularly in urban areas. For example, in the Edens Expressway reconstruction project (Yrjanson 1989; Urban expressway rebuilt 1979), it was estimated that one truck on a jobsite haul for recycling could do the work of six trucks on offsite disposal. In light of growing environmental problems and rising energy costs, recycling is particularly attractive because it reduces construction waste, conserves resources, and saves money. Laboratory and field studies have shown that a high-quality concrete, with improved freeze-thaw resistance and reduced d-cracking potential, can be produced by using recycled aggregate (Yrjanson 1988; Yrjanson 1989; Halverson 1981; Haas 1986; Hankins and Borg 1984; McCarthy 1986; Van Matre and Schutzbach 1989; Berger and Carpenter 1980). In fact, many states have found concrete recycling to be a viable and economical reconstruction alternative (Yrjanson 1988; Yrjanson 1989; Halverson 1981; Haas 1986; Hankins and Borg 1984; McCarthy 1986; Van Matre and Schutzbach 1989; Montana does its homework 1987; Wisconsin begins major interstate reconstruction 1984; Berger and Carpenter 1980; Kuhlman 1989; Porteous 1982).

Summary of Current Technology

The term "concrete recycling" refers to any means of reutilizing materials from existing concrete pavements in pavement reconstruction projects. For concrete pavements, two types of recycling are possible (Epps et al. 1980):

- In-place recycling is the process of crushing, or pulverizing, existing pavement and using it as a base or a subbase in the new pavement structure.

- Central plant recycling involves the breaking of the old concrete pavement on grade, loading, hauling, and crushing at a central plant to produce aggregate for use in new concrete pavements. The aggregate thus produced may be used in the new pavement as the aggregate for treated or untreated base or as new concrete mix.

While both operations involve reutilizing materials from existing concrete pavements, the in-place operation is not commonly regarded as concrete recycling operations. The in-place recycling operation is normally regarded as a method of surface preparation for unbonded overlays. In the sense that existing pavement materials are being reused, overlaying can be considered a method of recycling; however, overlaying is normally considered as a separate application. The focus of this section is the central plant recycling operation; only a brief discussion is given for the in-place recycling operation.

In-Place Recycling

Crack-and-seat and rubblization are the two in-place processes being used. Crack-and-seat involves cracking badly deteriorated concrete pavements into 1- to 3-ft^2 pieces (0.09–0.28 m^2) before overlaying (U.S. Dept. of Trans. 1987). Rubblization refers to the process of reducing existing concrete pavement to about 6-inch (152-mm) (maximum size) pieces before overlaying. Both processes are measures for preventing reflection cracking in overlays placed over deteriorated concrete pavements. Either concrete or AC overlays can be placed over the surfaces prepared by using these methods.

Central Plant Recycling

Central plant recycling is the operation with which concrete recycling is most commonly identified. This operation involves three distinct activities:

- Pavement removal—Breaking and removing deteriorated pavement and hauling this material to a central plant for processing

- Aggregate processing—Crushing, removing reinforcing steel, and sizing to produce recycled aggregate

- Recycled aggregate utilization—Incorporating recycled aggregate in pavement reconstruction

Significant advances were made in all three aspects of central plant recycling within the last 10 years. Recent advances in pavement removal and processing equipment make it possible to economically produce recycled aggregate from deteriorated pavements (Yrjanson 1988). There have also been major developments in the utilization of recycled aggregates. The most important development in this area is the use of recycled concrete in new concrete mixes for surface courses. The pioneering research for this application took place in the 1970s, and much of the field testing was done in the 1980s. A summary of current techniques and equipment for each of the three activities follows.

Pavement Removal. Pavement removal is normally performed with conventional construction equipment. The equipment used for concrete breaking includes diesel pile hammers, vibrating beam resonant breakers and guillotine breakers. Several passes are made with the pavement breakers to obtain pieces that can be processed by the crusher (usually pieces about 2 feet [0.6 m] on a side). Generally, a set number of passes are made with the pavement breaker, and any pieces too large for processing are broken with a backhoe. If the old pavement has an asphalt overlay, it is ripped off before the breaking operation begins and is recycled separately. The presence of an asphalt layer can significantly reduce the efficiency of the breaking operation. Conventional loaders and track-type excavators are used to load the broken pieces for hauling.

The most common type of pavement breaker is the diesel pile hammer. The pile hammer rigs are towed behind any construction equipment with a towing capability, such as a front-end loader, motor grader, or a crawler loader. The hammers deliver between 50 and 90 blows per minute with the impact energy ranging from 18,000 to 30,000 foot-pounds (24.4–40.7 kN-m), depending on the type; the hammers are towed at speeds ranging from 1 to 3 mph (1.6–4.8 km/hr). In 1986, most of the pavement-breaking work was done using a 30,000-foot-pound (40.7-kN-m) diesel pile hammer with a 4-foot (1.2-m) square impact plate.

Broken concrete is often windrowed, using either a backhoe with a rhino horn (a ripper tooth) attachment, or a crawler-dozer following the pavement-breaking operation. This procedure, in combination with the improved pile hammer, eliminates the need for cutting reinforcing steel at the roadway. Tracked equipment is usually used for this operation because the steel in the broken concrete can puncture the tires of wheeled equipment. Wheel loaders are normally used for the loading operation. Windrowing reduces the amount of subbase and fines being picked up and makes the loading operation more efficient.

Aggregate Processing. Aggregate processing is usually performed at a portable crusher plant set up near the construction site. Figure 5.6 shows a schematic of a typical crusher plant (Van Matre and Schutzbach 1989). It consists of a primary jaw crusher and a secondary crusher and screening plant consisting of a roll crusher, a small jaw crusher, and screening decks. The impact-type crushers are not normally used for concrete recycling because they can produce excessive fines. The following summarizes a typical aggregate

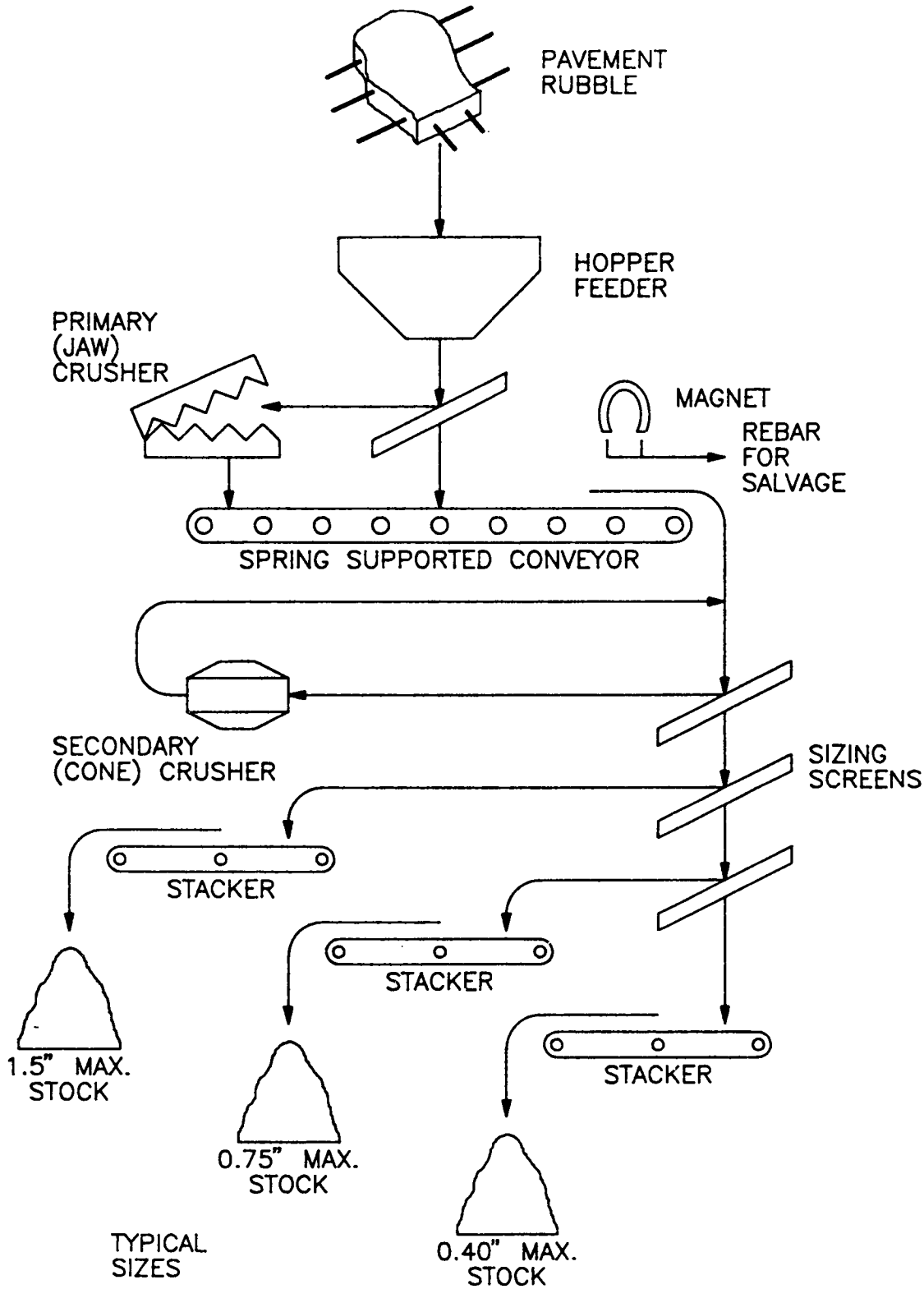

Figure 5.6. Schematic of typical crusher plant (Van Matre and Schutzbach 1989).

processing operation (Yrjanson 1989; Halverson 1981; Van Matre and Schutzbach 1989; Klemens 1990a; Munn 1989c).

1) Subbase material and fines picked up during pavement removal are removed by a screen before the crushing operation begins.

2) The primary jaw crusher reduces the rubble to 3- to 6-inch (76- to 152-mm) top-size and stacks this material in a surge pile. More than 95% of reinforcing steel is removed by an electromagnet placed over the conveyer belt, and by hand below the jaw crusher.

3) The secondary crusher recirculates the +3-inch (76-mm) material through the secondary jaw crusher, and −3-inch (76-mm) material through the roll crusher, until all material passes through the selected top-size screen. Any remaining steel is removed by an electromagnet over the conveyer. After this operation, the coarse (+No. 4 [4.75-mm]) and fine (−No. 4 [4.75-mm]) aggregate is separated by passing the material through the No. 4 (4.75-mm) screening deck. The fine aggregate is then run through a sand screw to control the −No. 200 (75-μm) content.

The most significant development in aggregate processing is the development of economical procedures for removing steel. Steel removal had been a major roadblock to concrete recycling (Berger and Carpenter 1980).

Not all material transported to the crusher plant is recoverable. The fines and subbase material picked up during the pavement removal operation can compose as much as 10% of the material transported. Some of the concrete strongly bonded to reinforcing steel is not recoverable. The other source of waste are the fines (−No. 200 [75-μm] material) produced during the crushing operation. The recovery rate of coarse aggregate from the recycling operation ranges from about 60–80% by weight, depending on the top-size of the final product: the larger the top-size, the higher the recovery rate. If an impact hammer-type crushing equipment is used, the recovery rate of coarse aggregate can be as low as 40%. Some of the waste material is suitable for use in the subbase. Most states do not use recycled fines in the concrete mix. If used, the recycled fines are usually limited to 30% of the fine aggregate portion of the mix.

Excessive fines produced during the crushing operation are not considered objectionable in all applications. For a cement-treated base, or soil cement, up to 20% or more of crushed concrete passing the No. 200 (75-μm) sieve is not considered deleterious. The fines actually improve durability and have the potential to reduce the cement content requirement (Kuhlman 1989). Berger and Carpenter (1980) suggest using ground recycled fines as a low-quality cement in soil stabilization applications.

Recycled aggregate utilization. Recycled aggregate is now being used in almost all instances where normal aggregate would be used in pavement reconstruction projects. Crushed concrete is being used as the aggregate in unstabilized bases, stabilized bases (econocrete bases), and new concrete mixtures for surface courses. The recycled aggregate was first used in pavement construction for building stabilized and unstabilized bases. The first such reported use of recycled concrete dates back to the mid 1940s; however, more widespread recycling of concrete pavements did not begin until the mid-1970s. The use of recycled aggregate in new concrete mixtures for surface course is a new technology that is rapidly gaining popularity.

Laboratory and field studies during the 1970s and 1980s revealed that excellent-quality concrete can be produced from recycled aggregate (Yrjanson 1988; Yrjanson 1989; Halverson 1981; Haas 1986; Hankins and Borg 1984; McCarthy 1986; Van Matre and Schutzbach 1989; Berger and Carpenter 1980). Even badly d-cracked pavements can be recycled to produce durable concrete. The common practice in recycling d-cracked pavement is to reduce the top-size of recycled aggregate to 3/4 inch (19 mm). This treatment is effective in reducing the d-cracking potential and improving the durability of the recycled aggregate concrete. It is recommended that durability tests be run on recycled d-cracked aggregates because there are varying degrees of d-cracking.

The small top-size aggregate does introduce a problem: the concrete produced from this aggregate does not seem to have any capacity to resist shear load through aggregate interlock. The cracks that form tend to be very straight across and through the slab, resulting in poor aggregate interlock. This poses a problem with faulting and spalling at the cracks and joints. Any cracks in the slab where the load transfer devices are not provided, including those held tightly together by the reinforcement in jointed reinforced concrete pavements, have the potential for rapid deterioration. The recommended practice is to construct plain, short-jointed pavements with dowels for heavy traffic routes when recycled aggregates are used (Yrjanson 1989). Another alternative is to supplement the recycled aggregate with coarse virgin aggregate having the desirable maximum size. No other special problems with aggregate from recycled, d-cracked pavement have been noted.

Mix proportioning of recycled aggregate concrete is a critical item that requires careful consideration of all of the variables. Absorption of recycled aggregates is much higher (as much as twice that of the virgin aggregate) and highly variable from batch to batch, making it difficult to control the w/c (Haas 1986). The workability of recycled concrete mixtures is also a concern. If all recycled aggregate is used, the resulting mix can be quite harsh due to the angular nature of the recycled sands (−No. 4 [4.75-mm] material). Normally, some or all of the material passing the No. 4 (4.75-mm) sieve is replaced with virgin sand. The common practice is to use all recycled coarse aggregate and replace half or all of the fine fraction with virgin sand. The coarse aggregate fraction in a typical recycled concrete mix ranges from 50 to 60%.

Fly ash is also used to improve the workability of fresh concrete and the durability of hardened concrete. As much as 15% of portland cement is commonly replaced with Type C fly ash. Normally, the amount of fly ash added is greater than the amount of portland cement subtracted. The replacement ratios of 1.5:1 or 2:1 by weight, fly ash to portland cement, are commonly used.

Conventional equipment is used for mixing and placing recycled aggregate concrete. The only modification to the conventional mixing plant needed to accommodate the recycled mix is the addition of a second sand bin, if both recycled and virgin sands are used in the mix. Placing, texturing, and curing operations are no different for recycled concrete than for conventional concrete. Roller-compacted concrete construction techniques are also used with recycled aggregate to construct cement-treated bases (Munn 1989e).

New Developments

Over the past 10 years, there has been a dramatic change in the attitude of many transportation agencies toward concrete recycling. In the past, very few agencies gave any thought to recycling on pavement reconstruction projects. On a limited number of projects in which the old pavements were recycled, the use of the recycled materials was fairly limited to stabilized or unstabilized bases. Several recent developments have changed this situation. Recent advances in recycling technology make it feasible to economically recover aggregate from deteriorated pavements, and experiments during the 1970s and 1980s demonstrated the feasibility of producing excellent-quality concrete from recycled aggregate. More importantly, these advances seem to have taken place as a result of the desire of many agencies to develop concrete recycling technology, recognizing the many advantages recycling has to offer.

The factors that favor recycling include environmental advantages and savings in hauling time and costs. Recycling is particularly advantageous for reconstruction in urban areas. It has been noted that in urban areas, transporting material over even short distances can be costly due to traffic congestion problems. When compared to a nonrecycling option in which the old pavement material must be hauled away for disposal and the new aggregate must be imported, the savings in transportation cost and time are doubled. In addition, with the current concern about the environment, the disposal of construction waste, particularly in urban areas, is a difficult and often costly problem. Given these factors, particularly in light of the large number of urban highways that will have to be reconstructed in the near future, the renewed interest in recycling is not surprising.

Important advances in all aspects of concrete recycling have been made. New equipment for efficient breaking, removing, and crushing of old pavements has been developed. Removal of steel from the broken concrete—which had been a roadblock to concrete pavement recycling—is no longer considered a problem. Significant advances in the application of recycled aggregate in reconstruction projects have also been made. Recycled

aggregate is now being used in almost all instances where normal aggregate would be used in pavement reconstruction projects.

A number of states, including Michigan, Wisconsin, Minnesota, North Dakota, Iowa, Illinois, and Wyoming, have completed several recycling projects and are planning more (Yrjanson 1988; Yrjanson 1989). Significant cost savings were reported on several recent projects. Michigan reported savings of 50–65% in jobsite cost of aggregate in some of their projects (McCarthy 1986). Oklahoma reported savings of $700,000 on a $5.2 million project to reconstruct 7.8 miles (12.5 km) of I-40 east of Oklahoma City in 1983. The amount of savings is highly variable, depending on local conditions. In some cases, the savings in direct costs are insignificant. The important point to be made is that recycling is now considered a viable reconstruction alternative; in most cases, recycling saves money.

Projected Future Trends

It would be safe to assume that a significant share of all future pavement reconstruction projects will involve recycling. Obtaining good aggregate for pavement construction is a significant problem in some areas of the United States. Although there is an abundant total supply of aggregates, the distribution of sources is such that there are localized shortages. In some areas, aggregates must be hauled more than 200 miles (321.9 km). Hauling distances of 50–70 miles (80–112 km) are not uncommon (Yrjanson 1989). In these areas, recycling offers tremendous advantages. All states that have experimented with concrete recycling reported success and plan expanded use of recycling on future reconstruction projects. The areas that need further research include mix proportioning and further verification of long-term performance of recycled aggregate concrete, as well as load transfer capacity across joints and cracks.

References

Barksdale, R. D., and R. G. Hicks. 1979. *Improved pavement-shoulder joint design.* NCHRP report no. 202. Washington: National Research Council, Transportation Research Board.

Berger, R. L., and S. H. Carpenter. 1980. *Recycling of concrete into new applications.* Proceedings, NATO Advanced Research Institute on Adhesion Problem in the Recycling of Concrete Paris, France.

Bock, B. T., and P. A. Okamoto. 1989. Evaluation of dowel placement using a dowel bar inserter. *Proceedings, 4th International Conference on Concrete Pavement Design and Rehabilitation.* Report no. FHWA-RD-89-208:625–39.

Bonded concrete inlay. 1990. *Concrete pavement progress special report no. SR-900.4 BI.* Arlington Heights, Ill.: American Concrete Pavement Association.

Calvert, G. 1983. Portland cement concrete inlay work in Iowa. *Transportation Research Record* 924:15–18.

Chanvillard, G., P. C. Aitcin, and C. Lupien. 1989. Field evaluation of steel fiber reinforced concrete overlay with various bonding mechanisms. *Transportation Research Record* 1226:48–56.

Charonnat, Y., J. P. Augoyard, and L. Ponsart. 1987. A new process for the laying of monolithic composite continuously reinforced concrete pavements. *Transportation Research Record* 1110:59–64.

Charonnat, Y., M. L. Gallenne, and P. Deligne. 1989. Concrete tool for laying concrete pavements: Zero clearance. *Transportation Research Record* 1234:48–56.

Chase, G. W. 1989. Fast Track paving: Meeting the need for early use of pavement. *Proceedings, 4th International Conference on Concrete Pavement Design and Rehabilitation.* Report no. FHWA-RD-89-208:579–85.

Concrete interstate widened and recycled under traffic. 1984. *Highway & Heavy Construction* 127 (9):42–43 (September).

CPR in record time is sweet music for Twin Cities. 1987. *Concrete Pavement Progress* 23 (5):8 (September/October).

Crawley, A. B., and J. P. Sheffield. 1983. Continuously reinforced concrete overlay of existing continuously reinforced concrete pavement. *Transportation Research Record* 924:1–9.

Darter, M. I. 1981. Patching of continuously reinforced concrete pavements. *Transportation Research Record* 800:12–17.

Darter, M. I., E. J. Barenberg, and W. A. Yrjanson. 1985. *Joint repair methods for portland cement concrete pavements.* NCHRP report no. 281. Washington: National Research Council, Transportation Research Board.

Department of Transportation. Federal Highway Administration. 1990. *Workshop on evaluating portland cement concrete pavements rehabilitation strategies.* Summary report. Washington: FHWA.

Dowel bar inserter rides again. 1990. *Concrete Pavement Progress* 26 (3):5 (May/June).

Epps, J. A., D. N. Little, R. J. Holmgreen, and R. L. Terrel. 1980. *Guidelines for recycling pavement materials.* NCHRP report 224 (September). Washington: National Research Council, Transportation Research Board.

Fast Track and Fast Track II: What you need to know. 1990. *Better Roads* 60 (4):28–32 (April).

Fast Track concrete pavements. 1989. *Technical bulletin* no. TB-004.0 IT. Arlington Heights, Ill.: American Concrete Pavement Association.

Fast Track magic keeps tourist mecca open. 1990. *Concrete Pavement Progress* 26 (5):3 (September/October).

Fast Track stands up to traffic in short order. 1990. *Concrete Pavement Progress* 26 (5):1–3 (September/October).

Ferragut, T. R. 1990. Accelerated rigid paving techniques. *Concrete in Highway Transportation* No. 7 (April):2–3.

FHWA Region 5. 1984. *Proceedings of the P.C. pavement patching conference for region 5 and 7 states.* Report no. FHWA-TS-83-211. Homewood, Ill.: FHWA Region 5.

Fowler, D. W., G. P. Beer, and A. H. Meyer. 1982. *Results of a survey on the use of rapid-setting repair material.* Report no. FHWA/TX-82/39+311-1 (interim report). Austin: Texas State Department of Highways and Public Transportation.

Guidelines for bonded concrete overlays. 1990. *Technical bulletin no. TB-007.0 C.* Arlington Heights, Ill.: American Concrete Pavement Association.

Guidelines for concrete overlays of existing asphalt pavements. 1991. *Technical bulletin no. TB-009.0 D.* Arlington Heights, Ill.: American Concrete Pavement Association.

Guidelines for full-depth repair. 1989. *Technical bulletin no. TB-002.0 CPR.* Arlington Heights, Ill.: American Concrete Pavement Association.

Guidelines for partial-depth repair. 1989. *Technical bulletin no. TB-003.0 CPR.* Arlington Heights, Ill.: American Concrete Pavement Association.

Guidelines for unbonded concrete overlays. 1990. *Technical bulletin no. TB-005.0 D.* Arlington Heights, Ill.: American Concrete Pavement Association.

Gulden, W., and J. B. Thornton. 1984. *Restoration methods for jointed concrete pavements.* Report no. RP 7504 (final report). Atlanta: Georgia Department of Transportation.

Haas, S. 1986. Recycled d-cracked portland cement concrete pavements in North Dakota. *Transportation Research Record* 1040:17–20.

Hall, K. T., M. I. Darter, M. B. Snyder, S. H. Carpenter, and S. W. Forster. 1989. Nationwide performance of concrete pavement rehabilitation. *Proceedings, 4th International Conference on Concrete Pavement Design and Rehabilitation.* Report no. FHWA-RD-89-208:137-149.

Halverson, A. D. 1981. *Recycling portland cement concrete pavement.* Report no. FHWA/MN-81/11 (interim report). Washington: FHWA.

Hankins, R. B., and T. M. Borg. Recycling PCC roadways in Oklahoma. *Transportation Research Record* 986:1–4.

Heinrichs, K. W., M. J. Liu, M. I. Darter, S. H. Carpenter, and A. M. Ioannides. 1989. *Rigid pavement analysis and design.* Report no. FHWA-RD-88-068. McLean, Va.: Federal Highway Administration.

Hendrickson, I. 1986. Iowa Fast Track concrete paving. *AASHTO Quarterly* 65 (4):10–12 (October).

Hutchinson, R. L. 1982. *Resurfacing with portland cement concrete.* NCHRP synthesis of highway practice no. 99. Washington: National Research Council, Transportation Research Board.

Illinois improves full-depth patch design. 1987. *Concrete Pavement Progress* 23 (4):4 (July/August).

Johnston, D. 1986. Construction of a thin-bonded portland cement concrete overlay in South Dakota. *Transportation Research Record* 1110:65–74.

Jordan, J. W. 1984. Evaluation of the performance of various rapid-setting concrete pavement patching materials and procedures by field testing. Master's thesis, Auburn University.

Kaler, M. K., J. Lane, and M. L. Johnson. 1986. *Performance of nongrouted thin bonded P.C.C. overlays.* Construction report: Iowa Highway Research Board Project HR-291. Ames: Iowa Department of Transportation.

Kansas joins the ranks—Completes first bonded overlay. 1987. *Concrete Pavement Progress* 23 (2):5 (March/April).

Klemens, T. L. 1989. Zero-clearance paver slips by obstructions. *Highway & Heavy Construction* 132 (11):44–46 (October).

Klemens, T. L. 1990a. Interstate slabs recycled for base. *Highway & Heavy Construction* 133 (3):32–34 (March).

Klemens, T. L. 1990b. When slab replacement resembles a production line. *Highway & Heavy Construction* 132 (11):28–31 (October).

Koesno, S., C. G. Papaleontiou, A. H. Meyer, and D. W. Fowler. 1988. *A study of the influence of the temperature of the substrate on the construction of bonded portland concrete overlays.* Report no. FHWA/TX-89+1124-1F (final report). Washington: FHWA.

Kuennen, T. 1990. Overlays, inlays: PCC figures in rehab work. *Roads & Bridges* 28 (7):69–70 (July).

Kuhlman, R. H. 1989. Soil-cement from recycled pavement. *Concrete International* 11 (5):35–38 (May).

Larsen, T. J., and J. M. Armaghani. 1987. Draincrete in pavement rehabilitation. *Transportation Research Record* 1110:75–80.

Maggenti, E. 1986. *Rapid pavement repair using polyurethane.* Report no. CA/TL-86/04 (final report). Sacramento: California Department of Transportation.

Mathis, D. M. 1989. Permeable base design and construction. *Proceedings, 4th International Conference on Concrete Pavement Design and Rehabilitation.* Report no. FHWA-RD-89-208:331–57.

McCarthy, G. J. 1986. Recycling of concrete freeways by Michigan Department of Transportation. *Transportation Research Record* 1040:21–24.

Mcghee, K. H. 1981. Patching jointed concrete pavements. *Transportation Research Record* 800:26–33.

Meyer, A. H., B. F. McCullough, and D. W. Fowler. 1981. Highway pavement repairs by using polymer concrete. *Transportation Research Record* 800:33–37.

Montana does its homework: 8 1/2 miles of interstate saves $400,000 with PCC recycling. *Concrete Pavement Progress* 23 (2):1–2 (March/April).

Mueller, P. E., and J. P. Zaniewski. 1987. *State-of-the-art of concrete pavement patching.* Report no. FHWA-AZ88-812 (final report). Phoenix: Arizona Department of Transportation.

Munn, W. D. 1989a. Bonded concrete overlays resurface busy freeway. *Highway & Heavy Construction* 132 (11):58–60 (October).

Munn, W. D. 1989b. Concrete gains in repaving race. *Highway & Heavy Construction* 132 (10):41–43 (October).

Munn, W. D. 1989c. Freeway slab replacements carry traffic same day. *Highway & Heavy Construction* 132 (11):56–57 (October).

Munn, W. D. 1989d. New CRCP shoulders beef up old I-state. *Highway & Heavy Construction* 132 (11):54–55 (October).

Munn, W. D. 1989e. Roller concrete wins airbase test. *Highway & Heavy Construction* 132 (7):58–60 (June).

Munn, W. D. 1990a. Behind the shift to permeable bases. *Highway & Heavy Construction* 133 (8):38–41 (July).

Munn, W. D. 1990b. Multiple on-board computers smooth paving operations. *Highway & Heavy Construction* 133 (4):50–51 (April).

Neal, B. F. 1983. *California's thin bonded overlay.* Report no. FHWA/CA/TL-83-04 (interim report). Sacramento: California Department of Transportation.

Obuchowski, R. H. 1983. Construction of thin bonded concrete overlay. *Transportation Research Record* 924:10–15.

One-pass slipforming speeds x-way reconstruction. *Highway & Heavy Construction* 122 (12):52–54 (December).

Oregon city joins swing to "Fast Track"... Keeps bus riders happy. 1987. *Concrete Pavement Progress* 23 (5):4 (September/October).

Overlays—Minnesota, Missouri style. 1990. *Concrete Pavement Progress* 26 (6):7 (November/December).

Parker, F., Jr., and L. Shoemaker. 1991. PCC pavement patching materials and procedures. *Journal of Materials in Civil Engineering* 3 (1):29–47 (February).

Parker, F., Jr., G. E. Ramey, and R. K. Moore. 1984. *Evaluation of rapid setting materials and construction techniques for concrete pavement patches.* Report no. FHWA/AL-88/99 (final report). Montgomery: Alabama Highway Department.

Permeable base doubles as haul road. 1990. *Concrete Pavement Progress* 26 (4):3 (July/August).

Peshkin, D. G., A. L. Mueller, K. D. Smith, and M. I. Darter. 1990. *Structural overlay strategies for jointed concrete pavements.* Vol. 3, *Performance evaluation and analysis of thin bonded concrete overlays.* Report no. FHWA-RD-89-144 (interim report). McLean, Va.: FHWA, Office of Engineering and Highway Operations R&D.

Porteous, P. 1982. New technology means a new day for American public works. *Professional Engineer* 52 (4):12–17 (Winter).

Smith, K. D., B. Snyder, M. I. Darter, M. J. Reiter, and K. T. Hall. 1987. *Pressure relief and other joint rehabilitation techniques.* Report no. FHWA-RD-88-111 (final report). Washington: FHWA.

Smith, K. L., D. G. Peshkin, E. H. Rmeili, T. Van Dam, K. D. Smith, M. I. Darter, and E. B. Owusu-Antwi. 1991. *Innovative materials and equipment for pavement surface repairs.* Vol. 1, *Summary of material performance and experimental plans.* SHRP H-105 (final report).

Smith, P., A. Meyer, L. Barlow, and J. Patroni. 1986. *Cost effective spall repair of concrete pavements.* Report no. FHWA-PA-85-046-84-04 (final report). Harrisburg: Pennsylvania Department of Transportation.

Snyder, M. B., M. J. Reiter, and K. T. Hall. 1989. *Rehabilitation of concrete pavements.* Vol. 1, *Repair rehabilitation techniques.* Report no. FHWA-RD-88-071 (final report). McLean, Va.: FHWA, Office of Engineering & Highway Operations Research and Development.

Solanki, A. I., B. F. McCullough, and D. W Fowler. 1987. *A study of the effect of construction variables on the bond behavior of CRCP overlays.* Report no. FHWA/TX-88+457-4 (interim report). Texas State Department of Highways and Public Transportation.

Sprinkel, M. M. 1989. *Evaluation of concrete pavement patching techniques.* Report no. FHWA/VA-89-22 (final report). Richmond: Virginia Department of Transportation.

Suh, Y-C., J. R. Lundy, B. F. McCullough, and D. W. Fowler. 1988. *A summary of studies of bonded concrete overlays.* Report no. FHWA/TX-89+457-5F (final report). Washington: FHWA.

Tayabji, S. D., and C. G. Ball. 1986. *Fiela evaluation of bonded concrete overlays.* Final report for Iowa Highway Research Board Project HR-288. Ames: Iowa Department of Transportation.

Tayabji, S. D., C. G. Ball, and P. A. Okomoto. 1983. *Effect of concrete shoulders on concrete pavement performance.* Report no. FHWA/MN/RD-83/05. St. Paul: Minnesota Department of Transportation.

Temple, M. A., R. D. Ballou, D. W. Fowler and A. H. Meyer. 1984. *Implementation manual for the use of rapid-setting concrete.* Report no. FHWA-TX-85-37+311-7F (final report). Austin: Texas State Department of Highways and Public Transportation.

Texas goes thin-bonded overlay route for future savings. 1986. *Concrete Pavement Progress* 22 (4):3 (July/August).

Traffic over Utah "Fast Track" concrete patch in just 5 hours. 1987. *Concrete Pavement Progress* 23 (4):6 (July/August).

Transportation Research Board. 1977. *Rapid-setting materials for patching of concrete.* NCHRP synthesis of highway practice no. 45. Washington: National Research Council.

Transportation Research Board. 1979. *Joint related distresses in PCC pavement—Cause, prevention and rehabilitation.* NCHRP synthesis of highway practice no. 56. Washington: National Research Council.

Transportation Research Board. 1984. *Highway uses of epoxy with concrete.* NCHRP synthesis of highway practice no. 109. Washington: National Research Council.

Tyson, S. S. 1977. *Partial-depth repair of jointed PCC pavements: Cast-in-place and precast procedures.* Report no. VHTRC 77-R37. Richmond: Virginia Department of Transportation.

U.S. Department of Transportation. Federal Highway Administration. 1987. *Techniques for pavement rehabilitation.* Participant's notebook. 3d rev. (October). Washington: FHWA.

Urban expressway rebuilt on recycled concrete base. 1979. *Engineering News Record* 203 (22):24–25 (November 29).

Van Matre, F. R., and A. M. Schutzbach. Illinois' experience with a recycled concrete inlay. *Proceedings, 4th International Conference on Concrete Pavement Design and Rehabilitation.* Report no. FHWA-RD-89-208:625–39.

Verhoeven, K. 1989. Thin overlays of steel fiber reinforced concrete and continuously reinforced concrete: State-of-the-art in Belgium. *4th International Conference on Concrete Pavement Design and Rehabilitation.* Report no. FHWA-RD-89-208.

Voigt, G. F., M. I. Darter, and S. H. Carpenter. 1986. Field performance of bonded concrete overlays. *Transportation Research Record* 1110:117–28.

Voigt, G. F., M. I. Darter, and S. H. Carpenter. 1989. Field performance of unbonded concrete overlays. *Transportation Research Record* 1227:12–23.

Voigt, G. F., S. H. Carpenter, and M. I. Darter. 1989. *Rehabilitation of concrete pavements.* Vol. 2, *Overlay rehabilitation techniques.* Report no. FHWA-RD-88-72. McLean, Va.: FHWA, Office of Engineering and Highway Operations R&D.

Wisconsin begins major interstate reconstruction. 1984. *Better Roads* 54 (7):12–13 (July).

Yrjanson, W. A. 1988. Concrete pavements U.S.A.: State of the art. *Transportation Research Record* 1182:35–43.

Yrjanson, W. A. 1989. *Recycling of portland cement concrete pavements.* NCHRP synthesis of highway practice no. 154. Washington: National Research Council.

Zero clearance paver adds up to time savings. 1990. *Concrete Pavement Progress* 26 (2):5 (March/April).

Zoller, T., J. Williams, and D. Frentress. 1989. Pavement rehabilitation in urban environment: Minnesota repair standards rehabilitate Twin Cities freeways. *Proceedings, 4th International Conference on Concrete Pavement Design and Rehabilitation.* Report no. FHWA-RD-89-208:111–15.

6

Jobsite Testing of Concrete

Traditional Approaches

Jobsite testing of concrete has, for the most part, changed little for a number of generations. Although interpretation of compressive strength testing has been codified in ACI 214 (Recommended practice for evaluation 1990), and more sophisticated statistical treatment of data has been promulgated (Barros, Weed, and Willenbrock 1983; DiCocco 1973), the basis of acceptance of concrete still remains the compressive strength cylinder or flexural beam cured for a specified period of time under largely artificial conditions. Before concrete hardens, the basis for acceptance remains the slump test (Standard test method for slump) and air content (Standard test method for air content—pressure; Standard test method for air content—volumetric), where appropriate. These tests are simple to perform and well-established throughout the industry; however, complete reliance on these tests alone represents a failure to recognize some important contributors to concrete performance. With respect to fresh concrete, it must be recognized that the slump test, as a simple measure of consistency, does not afford a measure of the workability of concrete under different modes of consolidation and placement. Mix proportions, especially the ratio of water to cementitious components, have a large impact on ultimate performance; the ability to measure these properties in fresh concrete would allow the screening of concretes deficient in the proportions which were specified. In addition, measurement of proprieties such as in-place density, void structure, temperature, and chloride content would be of great importance in ensuring a more uniform and consistent product.

Once the concrete has hardened, virtually no tests are performed on the actual structure. The concrete is accepted on the basis of cylinders cured under laboratory conditions, or under field conditions that, while representative of the same general environment as that in

which the structure is situated, may respond quite differently to the environment than does the more massive actual structure. In addition, cylinders cannot be expected to reflect effects of placement, consolidation, and finishing on the performance of concrete in the actual structure. Information now available (Bickley 1984; Carette and Malhotra 1984; In-place methods 1988) indicates that actual in-place strength is substantially different than strengths obtained by testing of field- or laboratory-cured cylinders. Therefore, it is important that actual in-place strength data be available to help meet rapid construction schedules, safely remove formwork, apply prestressing and post-tensioning forces, and terminate curing at the appropriate time. In-place testing is also needed to measure important properties of the hardened concrete, such as permeability, moisture content, and the presence of internal flaws, cracks, and voided areas. The ability to rapidly and routinely test for such properties would allow owners to accept more confidently the completed structure for its intended application.

New Developments in Nondestructive Testing of Concrete

Quality Control of As-delivered Concrete

A proper mix design for concrete can achieve the quality required from such concrete, but it is not guaranteed that the same concrete will be produced every time. Concrete may be misbatched, aggregates may contain excessive water, or extra water may be introduced as washwater in the mixing truck or by the truck driver as the mix stiffens. It is therefore important to verify the quality of concrete as delivered (before casting). In addition to the standard tests (slump and air content), mix proportions should also be checked; water content, cement content, and w/c—which are considered the most important parameters for determining the quality of concrete—should especially be checked. The importance of water and cement measurement has been recognized for many years. Development of measurement methods goes back to the 1930s. Dunagan (1931) developed a technique based on wet-screening that has been used quite extensively and has been adopted by a number of agencies.

Most of these old techniques, however, either were not accurate enough or were time consuming and more suited to laboratory studies. Beginning in the late 1960s, a new generation of techniques was developed and appeared to satisfy the basic requirements for a field technique, including the following: 1) the accuracy of determining cement and water contents should at least equal the accuracy specified for contemporary batching equipment; 2) the test should be reproducible with an acceptable coefficient of variation; 3) the test equipment should be rugged and easily transportable; 4) the test should be relatively insensitive to fluctuation in temperature; and 5) the test should be rapid.

These techniques have received limited study both in the lab and at actual field sites. Some techniques have been more extensively evaluated than others. A conference held at the

U.S. Army Construction Engineering Research Laboratory (CERL) (1975) brought together many of the researchers working on these developments; the published proceedings reflect the 1975 state of the art. More work on refinement and field evaluations has been done since that time.

Under NCHRP Project 10-25 (Tom and Magoun 1986), the U.S. Army Engineer Waterways Experiment Station evaluated the ability of seven test procedures to determine the cement or water content of PCC mixtures. Their evaluation included assessment of field experience and determination of the effects of chemical and mineral admixtures on the measurements (Tom and Magoun 1986).

Summaries and evaluations of the current techniques used in measuring cement and water contents follow.

Measurement of Cement Content

Kelly-Vail Method. This method was first developed by Chaplin and Kelly (1967) and was further developed by Kelly and Vail (1968).

This method begins with wet sieving. Two sets of No. 4 (4.75-mm) and No. 50 (300-mm) sieves are put in washing machines in which the water is continuously recirculated over the sieves, causing a suspension of cement to be produced. The suspension is then acidified, and total calcium (which is related to the cement content of concrete) is determined. Calcium ion can be determined by one of three techniques (Head et al. 1983). The first generation of equipment developed by Kelly and Vail utilized a flame photometer to determine concentration. The second generation used a complexometric titration of calcium with EDTA in the presence of a buffer and an eirochrome black T-indicator. The third generation, part of the concrete quality monitor (CQM) package developed by CERL, utilizes a commercial calcium analyzer incorporating a fluorometric system (Lawrence 1984). Advantages of this method include the following: 1) measurement can be made in 15–20 minutes; 2) the method is sufficiently accurate; and 3) the equipment is portable, especially for the CQM methods. The disadvantages to using this method include the following: 1) it requires some degree of skill in calcium determination (a chemist or an individual with a background in chemistry); 2) it requires calibration; and 3) it will be affected by any material containing calcium that passes a No. 50 (300-mm) sieve.

The Kelly-Vail method is the most popular method used in measuring cement content; it has been standardized by ASTM under designation ASTM C 1078. Manual volumetric titration and the instrumental fluorometric determination are included in this ASTM method. ASTM C 1078 recommends that this technique not be used for concrete containing certain aggregates, or admixtures that, when washed over a No. 100 (150-mm) sieve, yield significant and varying amounts of calcium ions in solution under the conditions of the test.

Rapid Analysis Machine. This procedure was developed by Forrester, Black, and Lees (1974) and came to be known as the rapid analysis machine (RAM). This instrument uses two principles, elutriation and wet-sieving, to separate material passing a No. 100 (150-mm) sieve from the rest of the concrete batch.

The sample is washed by a high volume and high velocity of water, separating the cement from the aggregate. The velocity is such that Stokes's law of particle settling causes the very small cement particles and cement-sized particles to be carried upward away from the larger aggregate particles that remain stationary or sink (Tom and Magoun 1986). Part of the fine fraction then flows over the circular inner weir into sampling channels; it is then directed through a No. 100 (150-mm) sieve. Material passing a No. 100 (150-mm) sieve is then neutralized and flocculated in the bottom of a constant-volume vessel (CVV) by adding a polyelectrolyte. Two predetermined calibration curves are used to determine the total amount of solids in the CVV and the amount of silt or noncement materials trapped with the solids.

RAM has found extensive use in England, but it has been slow reaching the United States and Canada. This test is relatively rapid and simple (almost totally automated) and can be performed by relatively unskilled personnel. Test equipment is somewhat bulky, which reduces portability. A source of water is needed to run the test; if significant amounts of material that pass the No. 100 sieve are present, correction factors must be developed.

In field trials with this instrument, Bickley and Mukherjee (1979) reported precision data obtained from more than 300 tests. Overall standard deviations (coefficient of variations) were 24 pounds/yd^3 (14 kg/m^3) (5.6%). Halstead and Ozyildirim (1985) stated that calibration of RAM equipment is time consuming and must be checked regularly. Backup equipment is also needed in case problems with the equipment (estimated cost, \$7,000–10,000, in addition to the cost of chemicals) develop. The high cost of the equipment and poor availability of service are therefore the major drawbacks.

FHWA Nuclear Gage. This method was developed by FHWA. The FHWA nuclear device consists of an Americium-241 (60-keV) source positioned at the center of a cylindrical vessel approximately 1 ft^3 (.028 m^3) in volume. The primary interaction for gamma rays emitted by this source is photoelectric absorption, which is proportional to the fourth power of the atomic number of a given nucleus. In concrete, calcium predominates as the element of highest atomic number; in most cases, therefore, a measurement of the number of gamma rays backscattered to the gage from the surrounding concrete will be a measure of the total calcium—hence cement—content. The gamma rays are detected by a photoelectric sodium iodide scintillation crystal.

Because the gage is sensitive to all elemental calcium in the sample, concretes prepared with calcerous or dolomitic aggregates will not be measured accurately unless the gage is calibrated with concretes by using the aggregates of interest and known cement contents. It is recommended that three calibration batches be used—batches with known cement

contents, using the aggregates in the exact proportions in which they will occur in the actual job. To compensate for the effects of temperature on gage response, a standard specimen composed of PMMA-impregnated concrete is measured at the start of each day, or whenever temperature changes occur. The ratio of sample counts to standard counts is then referenced against the calibration curve. Other factors such as water content and air content have little effect on results.

A laboratory and field evaluation of the nuclear gage was performed by Mitchell (1973). Gage precision (as opposed to standard error, which is a measure of deviation from the true value) was found to be ±15 pounds/yd^3 (±8.9 kg/m^3) for repeated measurements on the same sample. Field standard deviations were somewhat higher, ranging as much as ±29 pounds/yd^3 (17.2 kg/m^3), although this probably reflects the inherent variability in the concrete from load to load in actual field operations.

This test is relatively rapid and reasonably accurate, and it does not require skilled operators. The equipment is portable and relatively lightweight, but it must be calibrated for the particular aggregates being used; the operator must be licensed by the Nuclear Regulatory Commission.

Centrifuge (Hime-Willis) Method. The centrifuge technique for the determination of cement content was developed at the Research and Development Laboratories of PCA by Hime and Willis (1955). This method relies on the fact that the wide disparity in specific gravities of cement (3.10–3.20) and sand (usually less than 2.80) allow separation of the two by centrifugation in a heavy media fluid having a specific gravity between that of cement and sand. In the procedure developed at PCA, a 5-pound (2.3-kg) concrete sample is wet-sieved in a small container constructed from 30-mesh (600-μm) sieve stock. The material passing the sieve is then dried, and a 0.88-ounce (25-g) sample is taken from the residue. The sample is placed into centrifuge tubes containing an acetylene tetrabromide-carbon tetrachloride mixture (specific gravity, 2.80) and spun at 1,200 rpm (100 atm [10 MPa] on the centrifuge used by Hime and Willis) for a total of 11 minutes. The volume of the cement layer is then measured and referenced to a previously developed calibration curve from which the cement content is read.

Walker et al. (1961) carried out an extensive evaluation of this method. They found an overall average difference of 8 pounds/yd^3 (4.7 kg/m^3) between centrifuge and actual cement contents, and a standard deviation of 17 pounds/yd^3 (10.1 kg/m^3).

The equipment is inexpensive, can be assembled from "off-the-shelf" items, and is reasonably accurate. However, the major disadvantages of this method are that it is slow (requiring more than an hour to complete); errors may result from the presence of dense particles in the sand; and the method utilizes what are now considered toxic chemicals.

Flotation Method. A flotation technique for measuring cement content was developed in Germany by Nagele and Hilsdorf (1980). Flotation is a process for the separation of the components of dustlike mixtures widely used in the ore industry.

In applying this technique to concrete, a concrete mix is dispersed in water. Surface-active substances are added, reacting with a certain component of the mixtures (such as cement) to make it hydrophobic. These hydrophobic particles float to the surface of the suspension by attaching themselves to air bubbles. At the surface of the suspension, a froth containing the hydrophobic particles is formed but can be easily removed. The cement can thus be separated from the other components of the fresh concrete.

The froth can be easily destroyed by adding suitable chemicals; the cement-water suspension removed from the surface can then be weighed. From the composition of the suspension, the amount of cement may be calculated (Nagele and Hilsdorf 1980). Laboratory test results presented by Williamson (1985), using this method, showed that it can be used for different types of cement and is not affected by any admixture or additive that might exist in the concrete. Williamson concluded that this method, CQM, and RAM are equally accurate in determining the cement content of fresh concrete. The equipment, however, is expensive and requires a skilled operator.

Colorimetric SiO_2 Procedure. This method was developed recently (NCHRP 1990) and is based on a colormetric test developed for the silica content of cement. The test method involves the determination of silica based on the development of yellow beta silicomolybdic color with ammonium molybdate reagent in an acid solution. A calibration curve of absorbance versus percent silica is prepared; the cement content is then calculated as a function of silicon dioxide content from the calibration curve.

A field spectrophotometer was chosen to measure the color development. The selected instrument was portable, reliable and relatively inexpensive (less than $1,500.00). The test is rapid: it can be carried out in less than 10 minutes with a maximum error of 6%. A temperature of 150° F (66° C) is desirable for sample dissolution to avoid underestimating the silica content.

It seems that this method fulfills the conditions for a field test; further work should be performed, however, to make the procedure more applicable for technicians in the field and to determine the degree of interference by aggregates and admixtures.

Methods for Determination of Water Content

Kelly-Vail Method. This method was originally developed by Kelly and Vail (1968) concurrent with their cement content test. It relies on the dilution of a standard sodium chloride solution by the mix water in a concrete sample. The final chloride ion concentration is a measure of the water content of the sample. To perform the test, a fixed

amount of 0.5 N sodium chloride solution is added to a 4.41-pound (2-kg) concrete sample. To a second sample, a like amount of distilled water is added. The vessels containing the samples are then agitated so the concrete is completely dispersed; an excess of 0.5 N silver nitrate is added. The chloride content is then determined by back titration with potassium thiocyanate, using a ferric alum indicator.

Nitrobenzene is added to coat the silver chloride precipitate so that it will not resolubilize in the thiocyanate solution. Once the chloride titer has been determined, the water content can be ascertained by reference to a previously established calibration curve. If the concrete contains significant amounts of water-soluble chloride, the blank run is used as a correction to the chloride titer determined on the test sample.

The chloride concentration may also be determined by using a commercial chloride meter, which operates on a conductometric titration principle.

According to Howdyshell (1971), the Kelly-Vail method is more indicative of the net mix water rather than the total water in the batch, and has an overall mean recovery of 96% and a standard deviation of 4.4 pounds/yd^3 (26 kg/m^3). The single-operator standard deviation is 0.55% water.

The Kelly-Vail method was adopted by ASTM (ASTM C 1079). Two procedures, volumetric titration and coulometric reference technique, were considered to determine the chloride ion concentration of the intermixed solution.

Microwave Oven Technique. This technique was apparently first tested by the North Dakota State Highway Department (1978). The microwave oven technique involves gravimetric determination of water content by boil-off in a microwave oven equipped with a defrost cycle. The defrost cycle is needed to prevent overheating of the sample and fusion of the cement. To perform the test, a 2.205-pound (1-kg) sample is placed in a ceramic dish, weighed, and then placed in the oven. The sample is dried to constant weight by using the defrost mode for approximately 1 hour. Because this method measures total water in the sample, the absorption of the aggregates must be known in order to calculate net batch water.

The average error for a large number of mixtures was reported (North Dakota State Highway Department 1978) as approximately 3 pounds/yd^3 (1.8 kg/m^3) at 95% confidence, for an average water content of 250 pounds/yd^3 (148 kg/m^3). The average standard deviation was 1.25 pounds/yd^3 (0.74 kg/m^3).

This method is a direct determination of water and is inexpensive ($200–500 for the oven). Unfortunately, this method is relatively slow, requiring 20–60 minutes, and it determines total water—therefore aggregate absorption should be determined accurately.

Hot Plate. Hot plates have been standard laboratory and field equipment for many years. They have been used to determine the surface moisture of fine and coarse aggregates. The hot plate method is a simple and low-cost test, requiring only the weighing of PCC samples before and after they are dried on the hot plate. Aggregate correction factor should be considered to calculate the net water content (Tom and Magoun 1986).

Recent work (NCHRP 1990) on determinations of w/c in fresh concrete searched several rapid techniques for measuring water content. A microwave oven with a ceramic "ashing block assembly" was used. The ashing block assembly unit within the oven absorbs heat and allow the sample to achieve a higher temperature more rapidly. The water loss can be determined within a minute. Drawbacks of this method are that it requires a power source, and the mortar must be wet-screened from the concrete in order to use the ashing block.

Direct Measurement of Water-to-Cement Ratio

Although w/c can be calculated after the water and cement contents are measured separately by using the methods described above, a direct measurement of w/c would be highly desirable.

So far, researchers have not succeeded in finding a rapid and reliable method for measuring w/c. In fact, the main objective of NCHRP Project 10-25A (NCHRP 1990) was to develop a rapid and direct way to measure w/c by using "specific-ion" or "ion-selective" electrodes that measure the concentration of hydrogen ions (H+) and many other types of ions (and some gases) in solution. The prime objective of this research was to develop a procedure employing a "probe" that could be inserted into fresh concrete and directly read out the w/c.

Unfortunately, the search did not reveal any successful developments of such a probe. It did, however, suggest the use of a specific ion electrode that would selectively determine the concentration of a water-soluble constituent of portland cement in the mix water of concrete. Researchers stated that specific ion technology and instrumentation was not yet developed for the severe requirements of the test, but the work should be of great value in allowing successful analyses in the future when the electrode technology advances. An interesting method for measuring w/c ratio based on a buoyancy principle was described by Naik and Ramme (1989). The buoyancy method is based on the Thaulow method developed in the 1930s. The underwater weight of an air-free, fresh concrete sample must equal the sum of the underwater weights of the individual components of the fresh concrete. The underwater weight of water is zero; therefore, the underwater weight of a normal air-free, fresh concrete sample is equal to the sum of the weight of aggregates and the weight of cement under water. The underwater weight of the aggregates and the cement can be found by using the specific gravities of the materials, the weight of aggregates in air, and the weight of cement in air. On the basis of the above considerations, equations have been developed; w/c can be found by knowing the weight of the concrete test sample in air

and under water, the specific gravity of aggregates and cement, and the aggregate-to-cement ratio used in the concrete mixture.

Naik and Ramme (1989) recommended using a microwave oven to determine specific gravity values in much less time than the standard ASTM oven-drying procedure (less than an hour).

The buoyancy principle is very dependent on accurate specific gravity and absorption values, extreme care is therefore required in performing the test so acceptable results are obtained. This test is simple to perform and inexpensive, but more research is needed to verify the accuracy of this method, especially under field conditions.

Measurement of Chloride Content

It is well known that chloride ions play an important role in depassivating reinforcing steel in concrete and promoting its corrosion when moisture and oxygen are present. In highway structures in which steel reinforcement is used, it is quite important to know the chloride content of fresh concrete before it is cast (as delivered) because almost all concrete constituents (cement, mixing water, aggregate, and admixtures) are considered potential chloride sources; chloride content might thus exceed the limits before the concrete is subjected to any external chloride sources (e.g., deicing salts).

The most applicable method to measure the chloride content of fresh concrete in the field is the Quantab method. This method was originally used in the food industry but has since been developed for concrete (Millard and Wormald 1989). Procedures for using the Quantab chloride titrator in determining water-soluble chloride in freshly mixed concrete are presented in detail by Gaynor (1986). The Quantab chloride titrator is a thin plastic strip containing a vertical capillary column impregnated with silver dichromate. At the top of the column is a horizontal yellow bar, which will turn blue when wet. Superimposed on the vertical column is a scale numbered from 0 to 9. When the Quantab is put in the solution, capillary action causes liquid to rise. The vertical column is full when the horizontal bar turns blue.

Any chloride in the solution reacts with silver dichromate to form white insoluble silver chloride. The height of the white coloration, which can be read from the scale, is proportional to the concentration of chloride in the solution. A calibration sheet provided with test strips allows the chloride content of the original sample to be quickly estimated (Child 1988). The procedure for using this method for fresh concrete, as described by Gaynor, is as follows:

A representative sample of concrete is taken and remixed. By using an appropriate sample bucket, a test specimen is obtained, consolidated, and accurately struck off. The test sample is placed in a larger container, and enough water is added to dilute the mixing water in the

concrete sample to obtain a reading within the range of the Quantab titrator. The chloride content of the resulting solution is determined with a Quantab titrator. The chloride content of concrete is calculated on the basis of the amount of the dilution water used, the Quantab reading, and the known or estimated cement and water contents of the concrete.

This method is inexpensive and rapid, and it can easily be used in the field. Results obtained by this method can be compared to the limits on water-soluble chlorides specified in ACI 318 with some precautions. That is because ACI 318 requires tests of hardened concrete at an age of 28–42 days, when concrete cores are ground to pass a No. 100 (150-mm) sieve. This process will release chlorides that are tightly held within some aggregates and cannot be released otherwise; chloride contents may therefore be higher than those obtained by the Quantab method. However, results obtained by the Quantab chloride titrator should be within 20% of those obtainable by other procedures (Gaynor 1986).

Another rapid and relatively simple method for determining water-soluble chloride in fresh concrete was developed by Hope and Poland (1987). A concrete sample is put in a 20.4-fluid-ounce (600-ml) stainless steel beaker, where it is tamped and the excess concrete is struck off. The beaker is weighed before and after it is filled with concrete so the mass of the fresh concrete specimen can be measured.

The sample is then transferred to a bigger container, where a measured amount of water is added and stirred vigorously for 1 minute. Thereafter, a liquid is filtered out of the sample; about 1.7 fluid ounces (50 ml) of the liquid is collected. Half (0.85 fluid ounces [25 ml]) of this liquid is transferred to a conical flask, and 0.85 fluid ounces (25 ml) of borax solution and 20 drops of 5% potassium chromate solution are added. A burette is filled with 0.1 M silver nitrate solution and titrated into the conical flask until the first permanent buff color appears. Titration can be repeated for additional accuracy, if required (Hope and Poland 1987). The percent chloride by mass of concrete is then calculated on the basis of the volume of silver nitrate solution and the mass of water and cement.

This test method usually gives values slightly higher than the long-term soluble-chloride content and less than the total chloride content. Nevertheless, it is a good technique for quality control and inspection, enabling an inspector to determine within 5 or 10 minutes whether chlorides are present in the concrete at a required or acceptable level.

It should be mentioned that the two methods described above measure the water-soluble chloride content, which is approximately 80% of the total chloride content.

Measurement of Air-Void System in Fresh Concrete

Although the frost resistance of concrete is related to its air-void system (air content, spacing factor, specific surface, and number of voids), the only standard quality control procedure for as-delivered concrete relating to frost resistance is the air content measurement using pressure or volumetric methods (ASTM C 231 or ASTM C 173). The number of air voids in concretes having the same air content may vary dramatically. In one experiment, 5–6% air was incorporated into concrete by using one of five different air-entraining agents; 24,000, 49,000, 55,000, 170,000, and 800,000 air voids per cubic centimeter of hardened cement paste were produced (Mehta 1986).

Concrete might be delivered to the site with adequate air content (e.g., 5–6%), but specific surfaces of such concrete could be low and resistance to freeze-thaw cycling could be lower than expected. Therefore, measurement of the air-void system is as important as the measurement of total air content.

Parameters of the air-void system in hardened concrete are usually determined microscopically, using ASTM C 457. Determination of these parameters in fresh concrete (as delivered) is quite complicated; no such standard method is available to determine parameters other than the air content.

Research is continuing towards development of test methods enabling the concrete user to determine the air-void parameters of concrete before cost is estimated. A new method called the Danish elutriation method (DBT method) was developed in Denmark. The method is based on the fact that large bubbles rise through a column of water faster than small bubbles do, and that bubble size can be accurately inferred from how long it takes the bubbles to rise. A mortar is extracted from a concrete sample taken from the as-placed concrete and is injected by means of a syringe into the DBT air-void measuring equipment. The mortar sample is stirred, and the air bubbles rise up into the surrounding liquid (glycerol type).

The air bubbles gather on a glass bell attached to a glass cylinder filled with water placed above the special liquid. The air voids with diameters up to about 1/10 inch (0.3 mm) and the spacing factor can be determined by measuring of the upward thrust that the bubbles exert on the bell.

The time required to perform a test depends on the smallest-size bubble to be measured, but it typically takes 20–25 minutes. Although the cost of DBT equipment is relatively high (approximately $20,000), the prospects for its commercial use are good; it is already being used in some field projects in Europe (as discovered in personal contacts with some researchers in charge of using DBT systems).

Quality Control Testing of As-cast Concrete

In-place Density (Consolidation)

The degree of consolidation of concrete affects its durability and strength. In concrete pavement or any other concrete highway structures, inadequate consolidation can lead to premature concrete deterioration, requiring expensive rehabilitation or replacement. Monitoring concrete consolidation during construction is therefore an important quality-control procedure to predict the performance and serviceability of a concrete structure.

In-place Density Measurement

Nuclear Gage Technology. The measurement of the in-place density of a variety of construction materials has been greatly facilitated by nuclear gage technology. The release of gamma rays, or photons, during decay of certain radioactive nuclei forms the basis for the technique (gamma rays are chargeless electromagnetic radiation that have zero mass and that travel at the speed of light). The type of gamma radiation used in commercial nuclear gages interacts with matter primarily by photoelectric absorption and Compton scattering. Two designs, direct transmission gages and backscatter gages, are used.

Direct Transmission Gages. In using the transmission gage, the portion of concrete to be measured is placed between the radiation source and the radiation detector. As the density of the concrete increases (the spacing between source and detector must be held constant), the intensity of radiation detected decreases.

On the basis of the radiation intensity, absorption coefficient for the material and radiation used, and the thickness of the specimens, the concrete density is calculated (Whiting and Tayabji 1988).

A diagram of a typical design for a direct transmission density gage is shown in Figure 6.1. The source is encapsulated in stainless steel to prevent loss of the radioactive material. The source capsule is installed in the end of a metal rod that can be moved to positions below the surface of the concrete. The positions are indexed with a locking position at 1- or 2-inch (25- or 50-mm) intervals along the rod. Maximum depth below the surface of the specimen is normally 12 inches (305 mm). Gamma radiation travels through the specimen to a radiation detector at the opposite end of the gage body.

Backscatter Gages. A typical backscatter gage used for measuring concrete density is shown in Figure 6.2. Both direct transmission and backscatter capabilities are contained within a single instrument, but the mode of operation is different. To operate as a backscatter gage, the source is lowered from the shielded position to the bottom of the instrument just above the specimen surface. Only scattered radiation from the specimen is detected. The radiation detected bears a complex relationship to the density of the

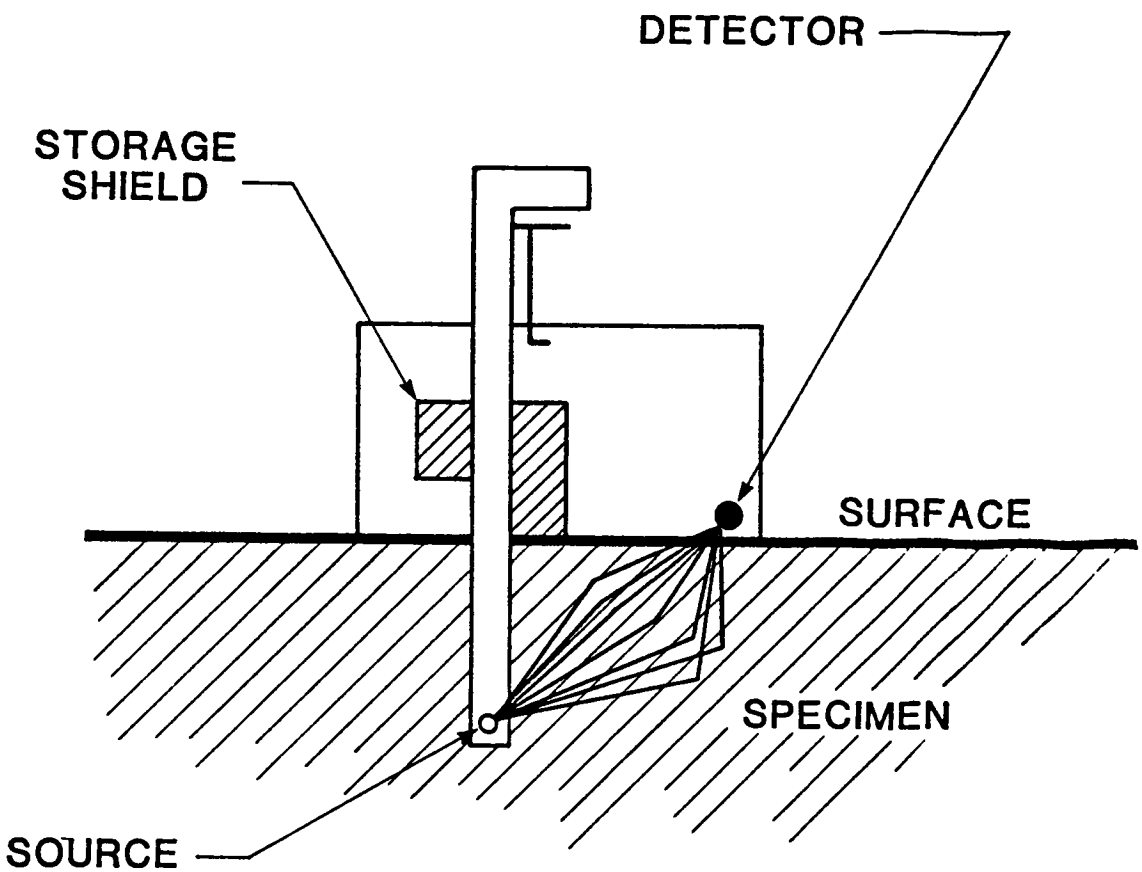

Figure 6.1. Diagram of a typical direct transmission nuclear gage (Whiting and Tayabji 1988).

specimen. The actual response of a backscatter gage is related to a number of factors, including source-specimen-detector geometry, energy of the radiation, elemental composition of the specimen, homogeneity of the specimen, and energy response of the detector.

The relationship between radiation intensity and density is more complicated than direct transmission because, in this case, two kinds of interaction coefficients—absorption and Compton scattering—exist. Each is actually a variable, changing with the energy of the radiation involved.

Because of these many potentially interfering factors, backscatter gages are typically less precise than direct transmission gages.

It should be mentioned that backscatter gages are used for density measurements of thin overlays of 2-inch (50-mm) thickness or less on hardened materials and on finished surfaces; direct transmission is more appropriate for use on thicker sections, such as full-depth pavements.

Both direct transmission and backscatter methods are considered in ASTM C 1040 for measurement of in-place concrete density.

Consolidation Monitoring Device. Measurements using commercially available, static nuclear gages suffer from a number of drawbacks, including the inability to keep up with rapidly moving paving trains—which can place up to 6.5 linear yards (4.5 m) of road slab per minute—and the need to make a large number of measurements to obtain representative values. A more promising approach is the use of a continuous gage. Such a device, called a consolidation monitoring device (CMD), was developed under a contract to FHWA (Mitchell, Lee, and Eggert 1979).

Although early models, which were modifications of oil well logging gages, met with little success, this more recent instrument was designed specifically for measuring density (consolidation) of concrete in highway construction. A diagram of the backscatter gage portion of the instrument is shown in Figure 6.3. The source and detector of this device are collimated so that only multiple scattered photons can reach the detector. The unit was designed to roll along a horizontal guide beam as the paver traverses the pavement.

Because variations in the air gap between the unit and the concrete surface were found to have a significant effect on readings obtained, an improved version allows for automatic compensation of the air gap via electronic capacitance sensing (Mascunana 1979). Field testing of the modified version of the instrument indicated that air-gap compensation worked well over a range of 0.6–1.4 inches (15–35 mm) (Mitchell 1982).

Twin-probe Technique. Both backscatter and direct transmission techniques suffer because data on the variability of density with depth is not well defined. In the case of backscatter

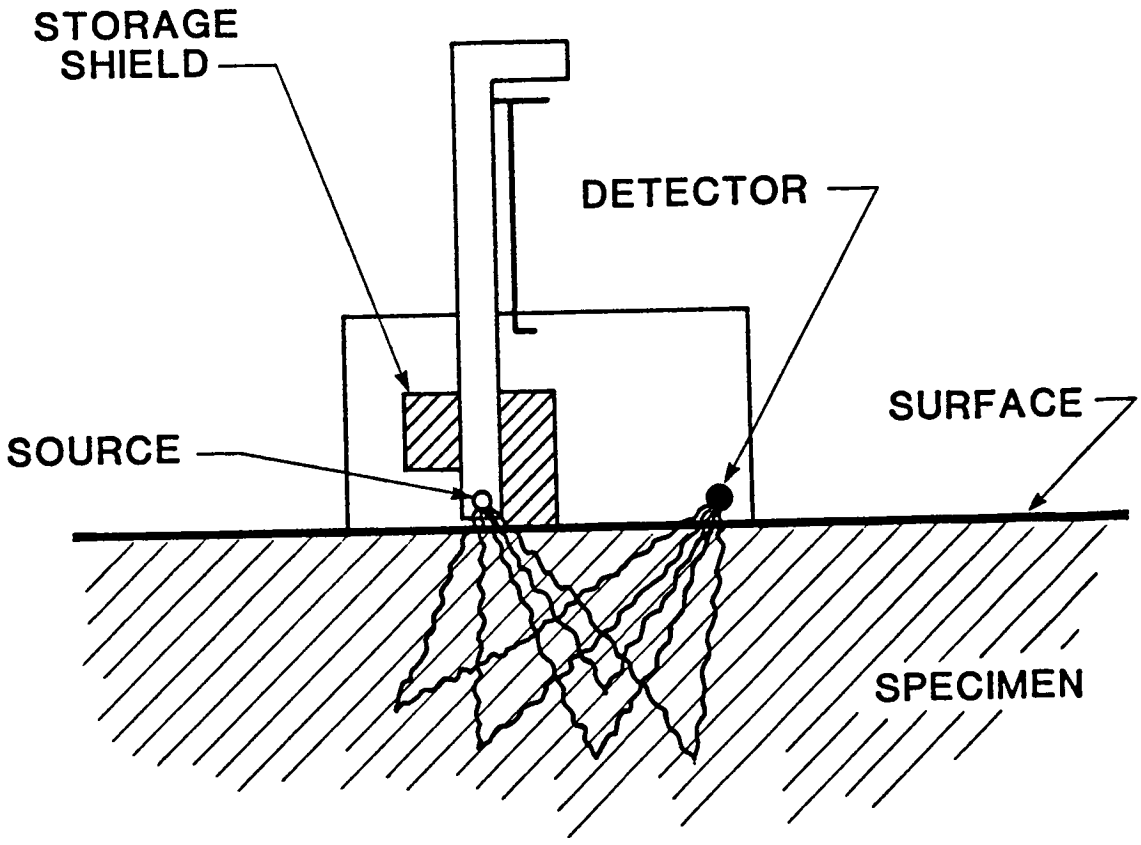

Figure 6.2 Diagram of nuclear gage operating in backscatter mode (Whiting and Tayabji 1988).

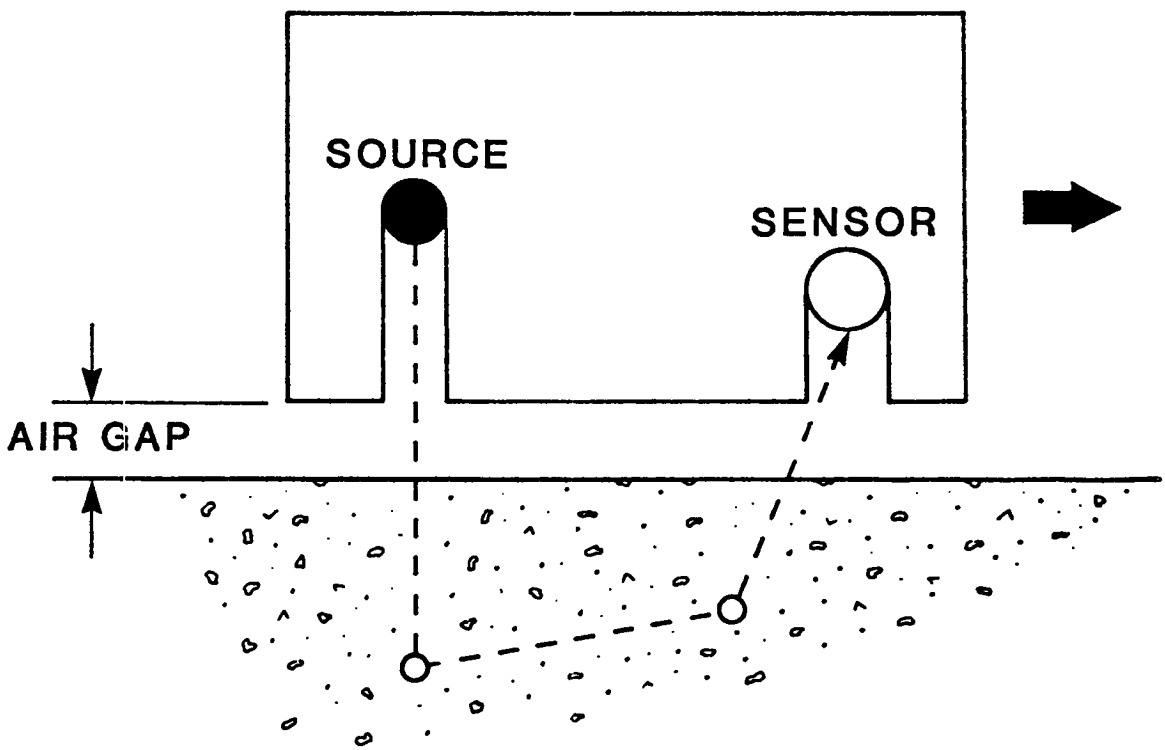

Figure 6.3. Diagram of consolidation monitoring device (CMD) (Whiting and Tayabji 1988).

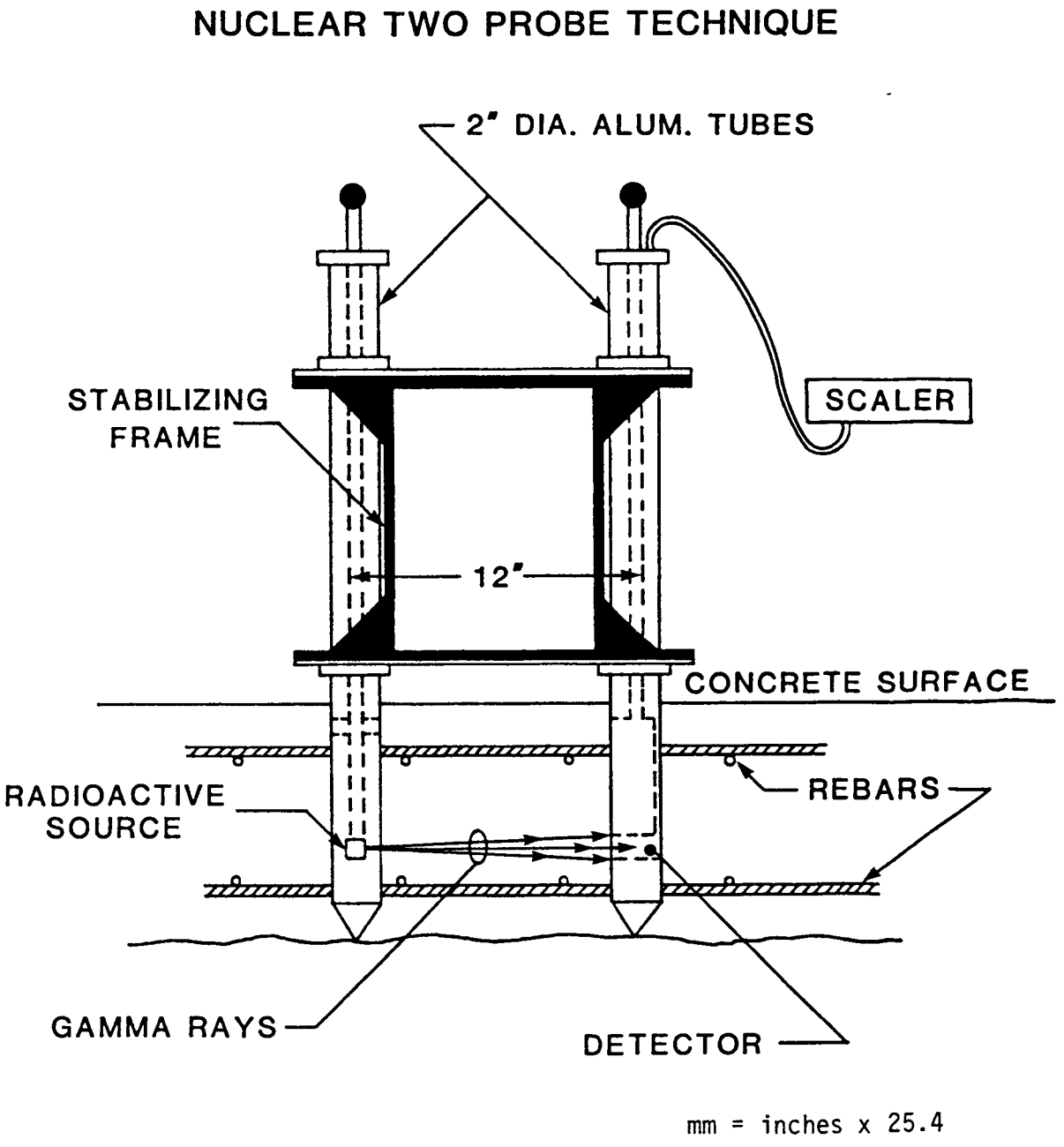

Figure 6.4. Twin-probe nuclear density gage (Whiting and Tayabji 1988).

gages, approximately 80–85% of the response reflects the density of the top 2 inches (150 mm) of concrete. Although direct transmission gages will include a contribution from all concrete located between the source and detector, the density represents only an average value through the thickness being measured. In an attempt to overcome these limitations, a commercial twin-probe source and detector system was modified by Iddings and Melancon (1981) for application to concrete. A diagram is shown in Figure 6.4. The distance between the source and detector is 12 inches (305 mm). Although this technique affords high sensitivity and good vertical localization of low-density areas, the device currently requires that the probes perforate the finished slab and thus is not amenable to continuous monitoring.

Capabilities and Potential Applications of Nuclear Density Gages. The four basic types of nuclear density gages, although similar in principle, differ enough in their operations that each type presents unique advantages and disadvantages to various phases of construction. To properly select a gage for a certain application, a knowledge of these limitations is essential. Whiting and Tayabji (1988) summarized the advantages and disadvantages of the aforementioned techniques (Table 6.1).

In-place Air Voids

Measurement of in-place concrete air content is another quality control indicator affecting the durability and strength of concrete. Vibration of concrete usually leads to reduction of air content, and the need for excessive vibration in heavily reinforced concrete structures might cause a severe reduction in air content. Therefore, measuring the air content of concrete after the concrete is placed and consolidated is quite important. In large concrete applications such as pavements, it is important to measure the air content in different locations while the concrete is being placed to ensure uniformity of the mix throughout the pavement. Although measurement of in-place air voids is quite important, there is no standard test available because of the complexity of developing such test.

Recently, fiber-optics technology has been applied to concrete. On the basis of this technology, under a SHRP contract with the New Jersey Institute of Technology, a fiber-optic apparatus to determine the air content of in-place concrete has been developed (Ansari 1991). The apparatus detects air bubbles in fresh concrete by measuring changes in the intensity of reflected light transmitted through a thin optical fiber (the changes in intensity occur because of differences in the index of refraction between an air bubble and concrete). Fiber-optic sensors have been used extensively in aeronautics and space applications for different kinds of measurements. Their advantages include high sensitivity, immunity to electromagnetic interference, and suitability for use in remote locations. Also, because no electricity is required at the location of the sensor, fiber-optic sensors can be safely used in any environment. The idea behind this instrument is that when a light wave travels from one medium into another, the indices of refraction in the two mediums determine the ratio between the amount of refraction and reflection. If the light wave travels from a material with a higher refractive index (glass or concrete) to a material with

a lower index (air bubble), most of the light reflects back. If the refractive indices are the same, most of the light will enter the new medium.

Table 6.1. Relative advantages and disadvantages of nuclear density gage types (Whiting and Tayabji 1988)

Gage Type	Advantages	Disadvantages
Direct transmission	Includes full concrete thickness in measurement. Little chemical interference. Widely used in other areas, commercially available. Fairly easy to calibrate. Precision is good. Can avoid steel by proper gage positioning.	Disturbance of concrete. Only measures small volume of concrete placed. Relatively show measurement. Difficult to clean gage completely. May be difficult to use where reinforcement is congested. Radiation monitoring required.
Backscatter	Easy to perform. Minimal disturbance of concrete. Widely used in other areas, commercially available. Satisfactory precision. Useful on thin overlays (more sensititve to surface layers). Facilitates cleanup.	Insensitive to deep layers. Volume of influence ill-defined. Sensitive to chemical effects. Reinforcing steel and underlying concrete may interfere. Radiation monitoring required.
Twin-probe	Depth localization of density. Long path length included in measurement. Sensitive to small voids. Little chemical effect. Small radiation source. Good precision.	Increased disturbance of concrete. Slow measurement. Difficult to operate. Equipment not commercially available.
CMD	Large volume of concrete included in measurement. Adaptable to process control. No disturbance of concrete. Satisfactory precision.	Sensitive to surface layers only. Measurement value represents average of volume scanned. Sensitive to chemical effects. Difficult to calibrate. Awkward to handle. Increased radiation hazard. Needs "custom" installation for each paver type. Measurements near pavement edges restricted.

This simple concept has been applied to fiber optics to develop the fiber-optic airmeter (Ansari 1991). The basic procedures of the fiber-optic airmeter are shown in Figure 6.5. Depending on the number of air bubbles in the fresh concrete, light will reflect back into the fiber, and the coupler will separate the reflected and transmitted signals and direct the reflected signal to a photodetector. The reflected light's signal intensity is changed to an electrical current in the photodetector and is amplified; the voltage output of the amplifier is then converted to a digital signal via an analog-to-digital convertor. Real-time data is then transferred to a lap-top computer, where it can be processed to yield values for air content (Figure 6.5).

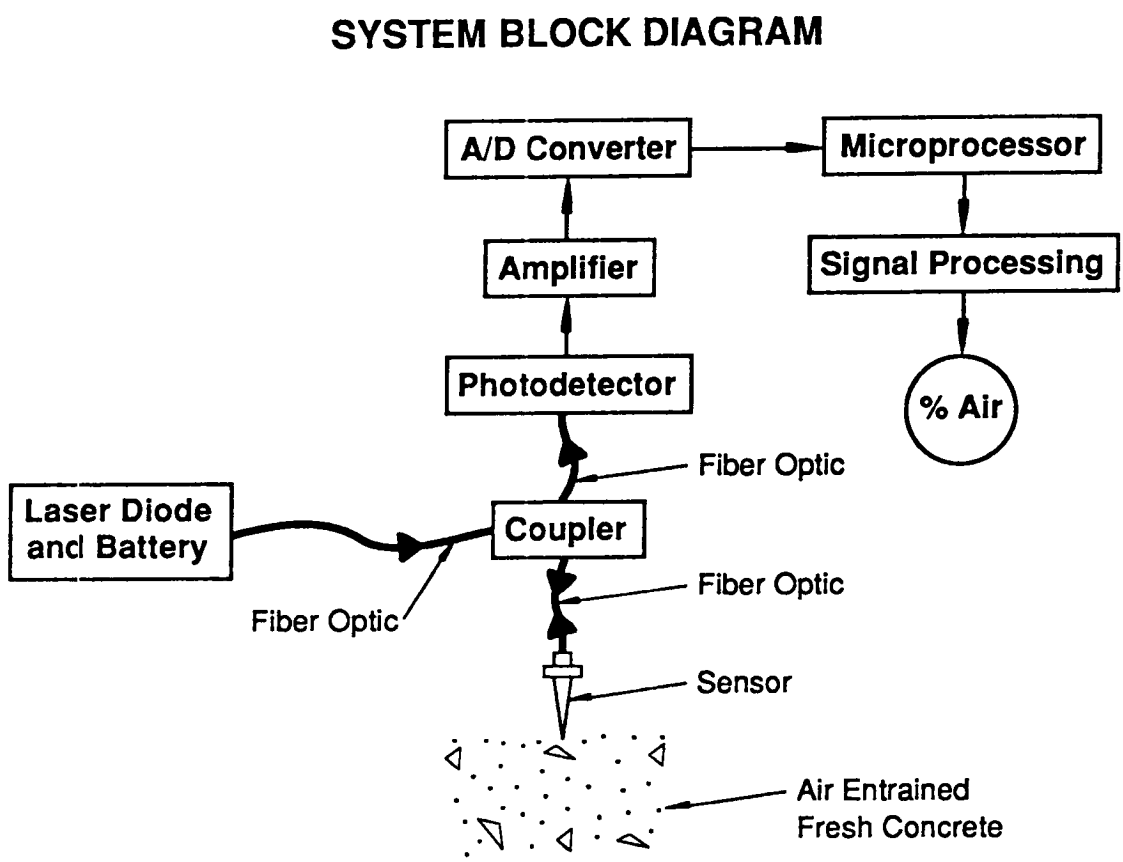

Figure 6.5. Components of the fiber-optic airmeter (Ansari 1991).

Ansari has conducted an experimental study to compare fresh concrete air contents measured by fiber-optic airmeter and those measured by pressure meter (ASTM C 231) or volumetric meter (ASTM C 173). Test results showed that air contents measured by the three methods are comparable.

The fiber-optic method is a rapid test (requiring 65 seconds for air content measurement), which satisfies the field requirement for in-place measurement; its accuracy, on the basis of laboratory data, is acceptable. However, further research is needed to verify the applicability of this method in the field, where different kinds of concrete mixtures are used and the ruggedness of the technique needs to be improved.

In-place Temperature

The temperature of fresh concrete is an important indicator of quality control, affecting the rate of strength gain, long-term strength, porosity, and the final pore size distribution. It is therefore important to monitor the temperature of in-place concrete to predict the concrete's serviceability and performance. The importance of temperature measurement is more pronounced in severe conditions (cold and hot weather): concrete temperature records reveal the effectiveness of different amounts or kinds of insulation or of other methods of protection for various types of concrete work under different weather conditions.

Temperature-Measuring Devices

The most common temperature-measuring devices that can be applied to concrete are liquid-in-glass thermometers, electrical resistance thermometers (ERT), thermistors, and thermocouples.

Liquid-in-glass thermometers, as defined in ASTM E 34, are temperature-measuring instruments whose indications are based on the temperature coefficient of expansion of a liquid relative to that of its containing glass bulb.

As required by ASTM C 1064, the temperature-measuring device used in measuring the temperature of fresh concrete shall be capable of measuring the temperature to ±1° F (±0.5° C) throughout the temperature range likely to be encountered in the fresh concrete. ASTM liquid-in-glass thermometers with ranges from 0 to 120° F (−18 to 49° C) are suitable for measuring in-place concrete temperature. Other thermometers—such as partial-immersion thermometers, which are designed to indicate temperatures correctly when the bulb and a specified part of the stem are exposed to the temperatures being measured—can also be used.

Another class of temperature-measuring device is the ERT, which operates on the principle of change in electrical resistance in wire as a function of temperature. Resistance temperature detectors are usually used when accuracy over a wide temperature range is required.

A thermistor is a semiconductor device exhibiting a monotonic decrease in electrical resistance with an increase in sensor temperature. It has a negative temperature coefficient of resistance. When the element is heated, its resistance decreases; thus more current flows to an ammeter, which is calibrated for temperature. The accuracy of a thermistor is limited in most applications only by the readout device. Thermistors are extremely sensitive, with an accuracy of ±0.01° C.

Thermocouples are popular temperature-monitoring devices in research and applications. A thermocouple is a combination of two dissimilar thermoelements joined to produce a thermal electromagnetic force when the junctions are at different temperatures. Different types of alloys used in thermocouple manufacturing include iron-constantan, chromel-alumel, and copper-constantan. For monitoring concrete temperature, thermocouples are embedded in concrete in selected locations and connected to strip-chart recorders or digital data loggers on which the temperatures are recorded.

Quality Control of As-cured Concrete

In-place Strength

The compression test of the standard cylinder is the most widely used test for controlling the quality of concrete. The strength value obtained from this test is used in design calculations suitably modified by constants that relate design stresses to the compressive strength value. This strength value is, therefore, an essential parameter in all design codes. However, neither standard cylinders nor cylinders cured by accelerated methods provide information about the effect of placement and curing operations on long-term in-situ strength.

To determine safe stripping time, apply post-tensioning, and ensure construction safety, in-place strength should be determined.

In-place Strength Test Methods. The objective of an in-place test is to obtain an estimate of the strength of concrete in the structure without having to drill and test core samples. Two types of test methods are available for estimating concrete strength. The first type includes those methods that do not measure strength directly but measure some other property of concrete from which an estimate of strength can be made; these methods include surface hardness, probe penetration, ultrasonic pulse velocity, and maturity methods. The second type of test methods are those that measure some strength property from which

an estimate is then made of the compressive or flexural strength of concrete; these include various types of pullout methods and break-off techniques (In-place methods 1988; Malhotra 1986). Descriptions of both types of test methods follow.

Surface Hardness Method (Rebound Hammer) (ASTM C 805). This method aims to strike the concrete surface in a standard manner, using a given energy of impact, and measure the size of indentation or rebound. The rebound hammer (also called the Schmidt Hammer) consists of a spring-controlled hammer that slides on a plunger, which is in contact with the concrete surface (In-place methods 1988). The hammer hits the shoulder area of the plunger and rebounds. The rebounding hammer moves the slide indicator, which records the rebound distance. The rebound distance (rebound number) is measured on a scale numbered from 10 to 100. The rebound number reflects the energy absorption related to the strength and stiffness of the concrete. Lower-strength concrete will result in a lower rebound number (In-place methods 1988).

Although the rebound hammer provides a quick, inexpensive way to check uniformity, it has several serious limitations (Malhotra 1986). It is sensitive to the conditions of the test site. If the plunger is located over a hard aggregate particle, an unusually high rebound number will result. The results of rebound hammer tests are also influenced by smoothness, carbonation, size and age of concrete, type of coarse aggregates, and moisture conditions (Malhotra 1986). To cover all these variations, ASTM C 805 requires that ten rebound numbers be taken for a test; if one of the readings differs by more than seven units from the average, then that reading should be discarded and a new average should be computed on the basis of the remaining readings. If more than two readings differ from the average by seven units, the entire set of readings is to be discarded.

Probe Penetration. The probe-penetration technique is a hardness test, which takes into account the type and hardness of coarse aggregate. It is a way to measure the penetration resistance of steel probes driven into the concrete by an accurately controlled powder charge. The depth of the exposed probe is then empirically related to compressive strength. The common commercially available system for this test is called the Windsor probe (In-place methods 1988; Swamy and Al-Hamed 1986). The Windsor probe system was developed in the United States in 1964; in 1975, ASTM proposed a tentative test method (C 803-75) for determining penetration resistance.

The Windsor probe is theoretically similar to the rebound hammer method in terms of energy absorption criteria, except that the probe hits the concrete with more force than the plunger of the rebound hammer does (In place methods 1988).

Because the probe travels through mortar and aggregates, its penetration is related to both mortar and aggregate strengths. However, the compressive strength of concrete is predominated by the strength of mortar; therefore, the type of coarse aggregate has a strong effect on the relationship between concrete strength and probe penetration. If two concretes, for example, have the same strength, the Windsor probe will penetrate deeper

into the concrete with softer aggregate (In-place methods 1988; Malhotra 1976). A comprehensive study of the use of the Windsor probe system was conducted by Swamy and Al-Hamed (1986). Normal and lightweight concrete of different aggregate types and aggregate sizes were investigated. The results were related to pulse velocity and core tests. Swamy and Al-Hamed concluded that if the Windsor probe system is used to evaluate absolute values of in-situ strength, separate calibration charts are necessary to account for type of concrete, size of aggregate, aggregate type, and age. They also indicated that the probe system estimated strength up to 28 days better than small-diameter cores (Swamy and Al-Hamed 1986).

These early-age strength measurements are helpful in determining stripping times for formwork and for determining the relative strengths of concrete in different parts of the same structure (In-place methods 1988; Malhotra 1986).

Ultrasonic Pulse Velocity. As described in ASTM C 597, this method is based on measuring how long it takes an ultrasonic wave to pass through concrete. The waves are generated by an electro-acoustical transducer that is held in contact with one surface of the concrete under test (In-place methods 1988). The pulses are then received and converted into electrical energy by a second transducer located a distance L from the transmitting transducer. The transit time is electronically measured, and the direct-path length between the transducers is divided by the travel time to obtain the pulse velocity through the concrete. The pulse velocity is proportional to the square root of the elastic modulus and inversely proportional to the square root of the mass density of concrete (In-place methods 1988). Because the elastic modulus is proportional to the square root of compressive strength, pulse velocity is proportional to the square root of the square root of compressive strength; as the compressive strength increases with age, there is a proportionately smaller increase in the pulse velocity.

A study conducted by Elvery and Ibrahim (1976) dealing with the ultrasonic assessment of concrete at early ages indicated that the development of pulse velocity slows down more rapidly than the development of strength. They also concluded that strength estimation from very low values of pulse velocity (up to about 6,600 feet/second [2 km/s]) is less accurate than it is from higher values. Their study also showed that the relationship between pulse velocity and strength is practically independent of w/c and curing temperatures for the parameter they examined, but is affected by aggregate content and type of cement.

There are several factors that affected the measurement of pulse velocity regardless of the properties of concrete. These factors include 1) smoothness of concrete surface under test, 2) influence of path length where sufficient length is required to avoid any error introduced by heterogeneity of concrete, 3) moisture content, and 4) presence of reinforcing steel. It is desirable to select paths that avoid the influence of steel because pulse velocity in steel is 1.2–1.9 times the pulse velocity in plain concrete (Malhotra 1976). However, when it is

not possible to do so, pulse velocity measurement should be corrected on the basis of the quantity and orientation of reinforcing steel in the structure.

Pullout Tests. The idea of a pullout test is to pull out from concrete a specifically shaped steel insert whose enlarged end has been cast into the concrete. The pullout force required is measured by using a dynamometer (Malhotra 1986). A schematic cross-section of a pullout test is shown in Figure 6.6. The pullout strength is of the order of 20% of compressive strength.

Pullout testing is not a recent technique. It has been used in the USSR since 1935 (Malhotra 1976). However, it did not become a practical in-situ testing method until the early 1970s; it became a full ASTM standard method in 1982 (ASTM C 900).

Khoo (1986) investigated the correlation between pullout testing and compressive strength. He conducted statistical analyses, and his study showed a good correlation between the pullout strength and the corresponding compressive strength of cubes and cores. Vogt, Beizai, and Dilly (1986) used "finger-placed" inserts for determining the strength development of concrete during the construction of a box culvert. Pullout tests were conducted at 2-, 4-, and 7-day intervals. The results obtained from this study correlated well with past experience and research (Vogt, Beizai, and Dilly 1986). The ideal way to use pullout tests in the field would be to incorporate pullout assemblies in the formwork for critical structural members. These specimens could then be tested at will during the construction period (Malhotra 1976). Another way to use the pullout tests in the field would be to cast one or two relatively large blocks of concrete incorporating pullout assemblies at the time of concreting the actual structural members. The pullout tests could then be performed during construction (Malhotra 1976). The pullout method is an excellent means of determining the strength development of concrete at early ages. Although the pullout test has an acceptable accuracy and does correlate with compressive strength of concrete, there are some drawbacks to this method. These drawbacks include damage to the concrete surface caused by the test and the need to plan for testing in advance. Another disadvantage of this method is that the pullout test does not measure strength in the interior of mass concrete because the pullout assembly does not extend more than 3 inches (76 mm) into the concrete (Malhotra 1976).

Break-off Method. This method is used to determine the flexural strength in a plane parallel to and a certain distance from the concrete surface. For this purpose, tubular disposable forms are inserted in fresh concrete. During testing, the inserts are removed, and the concrete core is broken off at the bottom by applying a force to the top and at right angles to the axis of the core (Ansari 1991; Johansen 1979). This method is more applicable to concrete pavement construction because it measures the flexural strength.

Johansen (1979) has used this method on airfield pavements made of vacuum-treated concrete. On the basis of the test results obtained, Johansen concluded that the "break-off" strength is about 30% higher than the conventional modulus of rupture. However, with the

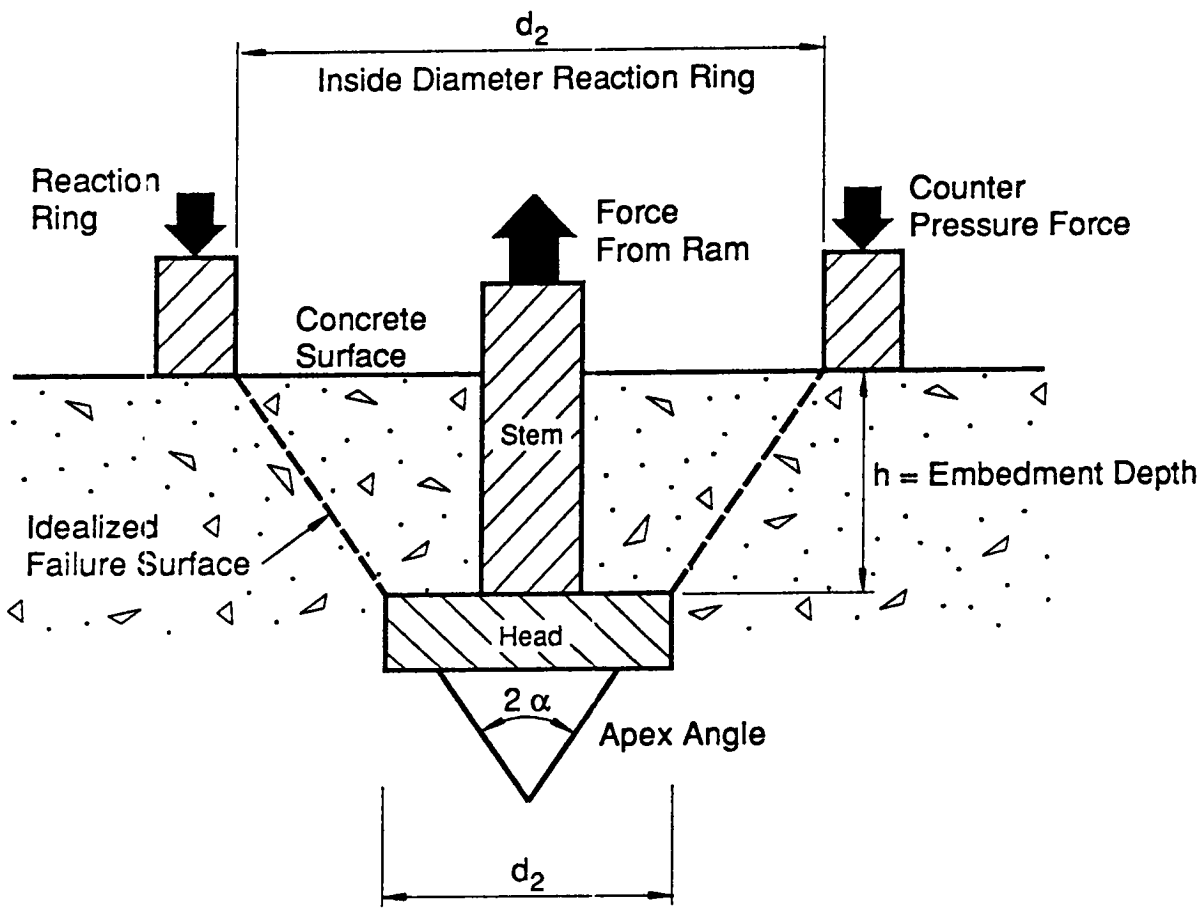

Figure 6.6. Schematic of pullout test (In-place methods 1988).

respective rates of strength gain with age are similar. Johansen also indicated that the variation of the concrete strength obtained by means of the break-off method is of the same magnitude as the variation obtained by conventional beam testing.

The break-off method is rapid and simple, and test results are not affected by surface conditions. Portable equipment is commercially available for this test. However, with this method, as with pullout testing, the tests need to be planned in advance. Another disadvantage is that slump and aggregate size affect planning for such a test. Difficulty is experienced in inserting tubes in concrete with slumps of less than 3 inches (75 mm), and the test cannot be used for concrete incorporating aggregate larger than 0.75 inch (19 mm).

Combined Methods. To predict the compressive strength of in-situ concrete more accurately, investigators have tried to apply more than one nondestructive test method at the same time.

The most popular combined test methods are the ultrasonic pulse velocity and rebound number. Malhotra (1976) summarized the research work conducted in this regard. Ultrasonic pulse velocity measurements are taken on concrete specimens or in-situ concrete. At the same time, the rebound numbers are taken, using the Schmidt hammer. The pulse velocity and rebound number are then combined to obtain a multiple linear regression equation with compressive strength as the dependent variable. The form of this equation is as follows:

$$\text{Log } S = AV + BR - C$$

where

S = concrete compressive strength, kg/cm^2 (1 kg/cm^2 = 1,450 psi)
V = pulse velocity, m/s (1 m/s = 3.3 ft/s)
R = rebound number
A, B, C = constants

This equation appears to predict compressive strength somewhat more accurately than if pulse velocity or rebound number alone were used.

Maturity Concept

Strength of concrete is the result of a chemical reaction (hydration) between cement and water. Because the rate of hydration depends on temperature, the strength of concrete may be evaluated from a concept of maturity that is expressed as a function of the time and the temperature of curing (Hope and Poland 1987; Hansen 1981). By measuring the

temperature in the concrete in a given time after casting, maturity can be calculated and compressive strength can be estimated if a preestablished relationship between maturity and compressive strength for a given mixture exists. This concept is based on the assumption that, for a particular concrete mixture, concretes of the same maturity will attain the same strength, regardless of the time-temperature combination leading to maturity.

Maturity is most often calculated by the formula developed by Saul:

$$M(t) = \Sigma\ (T - T_o)\ \Delta t$$

where

$M(t)$ = maturity at age t, degree-days or degree-hours
Δt = a time interval, days or hours
T = average concrete temperature during time interval, Δt, °C, and
T_o = datum temperature, °C

Datum temperature is that temperature at which concrete ceases to gain strength (hydration stops) with time. This temperature reportedly ranged from 11 to 73° F (−11.7 to 10.6° C). This formula is based on the assumption that maturity increases linearly with temperature. However, it is known from chemical reaction kinetics that the rate of chemical processes increases with temperature, not linearly, but exponentially, according to the Arrhenius equation:

$$K = A \bullet \exp\left(-\frac{E}{RT}\right)$$

where K is the rate constant (1/time), A is a constant (1/time), E is the activation energy, R is the gas constant, and T is the temperature (°K). On the basis of this equation, the variation in maturity, or the "equivalent age" at specified temperature, can be computed (Hansen 1981):

$$t_e = \sum \exp Q\left(\frac{1}{T_a} - \frac{1}{T_s}\right)\Delta t$$

where

t_e = equivalent age at a specified temperature T_s, days or hours
Q = activation energy divided by the gas constant, R
T_a = average temperature of concrete during time interval Δt, °K
T_s = specified temperature, °K and
Δt = time interval, days or hours

Maturity concepts based on the activation energy and relationships between activation energy and datum temperatures were discussed in detail by Carino, Lew, and Volz (1983).

Both maturity functions are considered in ASTM C 1074, "Standard Practice for Estimating Concrete Strength by the Maturity Method."

To estimate the in-place strength of concrete in highway or other structures based on maturity concepts, the concrete temperature should be continuously monitored and the in-place maturity then computed, using either the Saul temperature-time factor or equivalent age. Temperature monitoring starts as soon as practicable after concrete placement; according to ASTM C 1074, the recording time interval shall be 1/2 hour or less for the first 48 hours, and 1 hour or less thereafter. Maturity is monitored by using thermocouples or thermistors connected to strip-chart recorders or digital data loggers, or by using the commercially available maturity meters that automatically compute and display either temperature-time or equivalent age.

The effectiveness of the maturity method is based on the assumption that the concrete in the structure is the same as that used to develop the strength-maturity relationship.

A review of the development of the maturity method over the years and factors and conditions that influence its validity and applicability was presented by Malhotra (1974a and 1974b). In these two papers, Malhotra critically reviews the literature published on the subject since 1904 and includes a brief summary of the literature reviewed. The review showed that some researchers have experienced good correlation between maturity and compressive strength of concrete, whereas others have questioned the validity of the maturity concept. Malhotra referred to research work conducted by Klieger in 1958, which showed that curing temperature and the presence and absence of moisture during curing have a major influence on the correlation between the temperature-time factor and strength (Klieger 1958). Carino, Lew, and Volz (1983), in their research on strength prediction by the maturity method conducted in the early 1980s, also indicated that the strength-maturity relation of a given concrete mixture is affected by the early-age temperature.

It should be noted that the maturity method is a relatively simple method and can estimate the in-place strength of concrete in pavements or other concrete highway structures. At the same time, the limitations on this method must not be ignored. These limitations, as listed in ASTM C 1074, include the method's failure to allow for the effects of early-age concrete temperature on the long-term ultimate strength, and the need to supplement the maturity method with other indications of the potential strength of the concrete mixture.

Concrete Surface Permeability

The presence of water is an important factor in most concrete deterioration. Freeze-thaw damage occurs when water is absorbed into concrete and freezes. Corrosion of steel reinforcement in concrete structures occurs in the presence of moisture and from the intrusion of salt-laden waters. ASR requires the presence of moisture for expansion of the gel that causes disruption. The testing of concrete surface permeability is therefore a

valuable tool for the assessment of concrete durability and an important inspecting procedure for performance and serviceability of concrete structures.

Several in-situ methods for evaluating concrete permeability were developed over the years. It is important for such tests to be nondestructive and rapid because they are most often required to be conducted while the structure is in service.

One of the first methods developed for field indication of concrete permeability was the ISAT (Levitt 1971). The test apparatus consists of a gasketted cap that is either clamped or affixed with sealing putty to the concrete test surface. Water is poured into the inlet until the outlet runs clear. A capillary tube is then affixed to the outlet tube; an initial reading is taken, and subsequent readings are obtained at 10 minutes, 30 minutes, 1 hour, and 2 hours. To date, the apparatus has been used on reinforced concrete, paving, and architectural concrete with good results.

The method was standardized in BS 1881 Part 5-1970; recent revisions may eliminate the 2-hour measurement. In most onsite applications, measurements are often limited to the 10-minute reading. Problems encountered with the technique on these jobs included difficulties in achieving a watertight seal, securing the rig to the concrete (which may require drilling anchor-bolt holes in some instances), and inconsistent results during cold weather or when the surface was damp.

Since initial development of the ISAT, there has been increased interest in the development of such test procedures for determination of in-situ permeability. A number of non-steady-state, or indirect, methods have been developed by a variety of researchers. Figg (1973); Cather et al. (1984); Schonlin and Hilsdorf (1987); Kasai, Matsui, and Nagano (1984); and Hansen, Ottosen, and Peterson (1984) have concentrated on techniques based on non-steady-state measurement of water absorption or air permeability.

Figg's procedure (1973) consists of drilling a hole 1.17 inches deep by 0.22 inch in diameter (30 mm deep by 5.5 mm diameter) into the concrete, sealing the hole with a silicone rubber plug, ensuring an airtight seal by means of a hypodermic needle placed through the silicone plug, and monitoring the rate of fall of water in a capillary after injecting water by means of the hypodermic syringe into the small cavity in the concrete.

The method has also been adapted to measure air permeabilities. The hole and sealant are the same as previously described for the water injection method. The run is started by turning the three-way stopcock to allow air to be withdrawn from the concrete until a vacuum of 14.8 kPa (112 mm) Hg is reached. The pump is then isolated, and the time required for the pressure to rise to 19.9 kPa (150 mm) Hg is recorded. The value is taken as a relative measure of the air permeability of the concrete.

The results obtained were found to be a strong function of the moisture content of the concrete. Variations of 1.0–1.8% in moisture content led to a maximum difference in Δt of

20 seconds. Typical tests ran 100–500 seconds, indicating that errors of up to 20% are to be expected if the concrete has not been previously calibrated with respect to moisture content versus Δt. Although it is possible in the laboratory to determine moisture content by subsequent oven-drying (and thereby develop correction factors to the air permeability data), a satisfactory field technique is not yet generally available (Kasai, Matsui, and Nagano 1984).

Cather et al. (1984) have recently proposed modifications to the original Figg technique that apparently result in an improved test procedure. A hole with a diameter of 0.39 inch (10 mm) and a plug depth of 1.56 inches (40 mm) was selected. The pressure is reduced to 43.9 kPa (330 mm) of Hg, and the time required for the pressure to rise 49.2 kPa (370 mm) is recorded on a digital manometer. Cather et al. (1984) concluded that within the period of test, most of the pressure increase is the result of air being drawn from a local area near the test hole, rather than from the exterior surface of the test slab.

An electronic device and test procedures were developed by Whiting (1986) to assess the permeability of concrete to chloride ions. This method consists of monitoring the amount of electrical current passed through a test area on a concrete slab when a potential difference of 80 Vdc is maintained across the specimen for 6 hours. Chloride ions are forced to migrate out of a sodium chloride solution subjected to a negative charge through the concrete towards reinforcing steel maintained at a positive potential. This technique was originally developed for laboratory investigation and was adopted by AASHTO (T277-83). It should be mentioned that performing the field test requires 2 full working days.

A final category of in-situ permeability techniques meriting discussion is the pressure-applied surfaced test developed by Montgomery and Adams (1985). In this technique, a pressure vessel containing water is affixed to the concrete surface by means of a vernier-controlled piston. Vernier readings before and after the test can then be used to indicate the amount of water flowing into the sample. This test is apparently simpler to apply than the ISAT or Figg method; however, the need to glue the test rig to the concrete surface may result in some damage to the surface during removal.

In evaluating the aforementioned methods, it seems that methods based on air permeability techniques are more suitable for field applications because they can be operated from the surface and requires no mounting.

Defect Detection

Nondestructive detection of defects (cracks, flaws, or deterioration) in as-cured concrete is an important procedure in concrete structure evaluation. It aids the inspector, in combination with other nondestructive techniques, in evaluating damaged structures. The safety of structures can also be checked by such techniques. Nondestructive detection of

defects can also be used for structural assessment before renovation of existing structures. Delaminations in concrete bridge decks can be detected by this procedure.

Several techniques have been developed and used for detecting defects in highway concrete structures. These techniques include acoustic-impact methods (sounding methods), infrared thermography, and ground-penetrating radar.

The sounding methods have been used in delamination detecting. The idea behind this technique is simple: the detection is performed by striking the concrete surface and listening to the responses. The characteristic of the sound indicates the condition of the structure. Many instruments such as hammers, iron rods, chains, and electronic equipment have been used for this purpose. Chain-drag and electromechanical sounding devices were considered in ASTM D4580 procedures. The chains are dragged over the deck surface and, from the sound of the dragging, the deck is evaluated. Dull or hollow sounds indicate delamination, whereas nondelaminated concrete gives a clear ringing sound. The delaminated areas are marked, and a scaled map is constructed. In the electromechanical sounding method, the surface is tapped by electrically powered tapping wheels and sensed by a sonic receiver.

Although the chain-drag method is time consuming, it has been used quite widely in the field. Although the mechanical tapping device is more rapid, it has been reported to be less reliable than the chain-drag method (Sansalone and Carino 1989). Sounding methods in general are less reliable as the cover over the delamination increases or when asphalt concrete overlays are present (Sansalone and Carino 1989). Infrared thermography has also been used to detect delaminations in bridge decks. This method works on the principle that delaminated areas become heat insulators inside the concrete and cause discontinuity in heat flow. As a result, the surface temperature will be affected—that is, surface temperature above the delaminated areas will be different than that above undelaminated areas. Delaminations are detected by monitoring variations in surface temperature, using an infrared camera (Sansalone and Carino 1989; Manning 1985).

One of the major drawbacks of this method is that it requires proper weather conditions. For example, thermography cannot be used when moisture is present on the deck surface because of its high emissivity. A further drawback is that it is difficult to produce scaled hard copy showing the areas of deterioration on a plan of the deck (Manning 1985).

One of the most sophisticated techniques used in defect detection is ground-penetrating radar. Using this technique in pavement and concrete bridge decks was begun in the mid-1970s (Manning 1985). A pulse of high-frequency electromagnetic waves (radio frequency energy) is directed into the deck, a portion of the pulse is reflected from any interface, and the output is displayed on an oscilloscope. An interface could be any discontinuity such as cracks or differing dielectric such as air to asphalt or asphalt to concrete. A permanent record of the received signals can be stored on file or analog magnetic tape. The received signals are displayed as a function of time (Sansalone and

Carino 1989; Manning 1985). Field applications of radar show that it can successfully detect the deterioration of concrete structures, but the practical problem of using radar is the large amount of collected data that will be difficult to interpret without false results. Therefore, an experienced operator is required to interpret the data and avoid false results. Research has focused on computer reduction of data, but a standard approach has not been established (Cantor 1984).

Ongoing research programs at the National Bureau of Standards (NBS) and SHRP are aimed at developing the theoretical basis and practical applications for a new nondestructive testing technique for concrete known as impact-echo. Carino (1984) studied the use of pulse-echo in flaw detection. In a more recent publication, Carino, Sansalone, and Hsu (1986) described the use of this technique in detecting delaminations in concrete slabs.

Descriptions of the impact-echo techniques can be found in several publications (Cantor 1984; Carino 1984; Carino, Sansalone, and Hsu 1986). The experimental study of this technique showed interesting results. Delaminations were created in a slab by embedding a plastic sheet in the slab during fabrication; by using impact-echo techniques, all delaminations were detected, and their relative dimensions were determined accurately. In another study, slabs containing corrosion-induced delaminations at unknown depths were detected by impact-echo. The excellent agreement between the impact-echo results and the actual depth demonstrates the capability of the method to detect real cracks in concrete.

Future Trends

Demands on jobsite testing of concrete at different stages of manufacturing (as-delivered, as-placed, and as-cured) will increase in the coming years. Researchers in the concrete area will be more attracted to the new developments in science and technology used in other fields (e.g., optics and electronics) to develop and improve concrete testing methods that can satisfy the field requirements of such tests.

Although many methods and techniques for measuring water and cement contents of fresh concrete were developed over the years, none of these methods has completely satisfied the requirements in terms of time, accuracy, and field applicability. The need for a rapid and more reliable technique for measuring water and cement contents and determining w/c of as-delivered concrete will encourage researchers in this area to keep searching for such techniques.

More research effort will be expanded in the area of in-place concrete testing, especially in measurements of the air-void system. More work to improve the field applicability of fiber-optic devices will be conducted. The use of nuclear gages will increase after their successful use by several states and after highway practitioners become more familiar with such instruments. Research in the area of consolidation monitoring using nuclear gages will focus on the implementation of this technique into statically based quality assurance

programs. As-cured concrete nondestructive testing methods are more established, and several techniques have been adopted by ASTM. However, each one of these methods must be carefully applied to produce more reliable and applicable testing techniques.

References

Ansari, F. 1991. Rapid in-place air content determination in fresh concrete. *Concrete International: Design and Construction* 13 (1):39–43 (January).

Barros, R. T., R. M. Weed, and J. H. Willenbrock. 1983. Software package for design and analysis of acceptance procedures based on percent defective. *Transportation Research Record* 924:85–93.

Bickley, J. A. 1984. The evaluation and acceptance of concrete quality by in-place testing. In *In-situ/nondestructive testing of concrete.* ACI SP-2, ed. V. M. Malhotra, 95–109. Detroit: American Concrete Institute.

Bickley, J. A., and P. K. Mukherjee. 1979. *Cement-content measurements with the rapid analysis machine.* Transportation Research Board report no. 720, 40–44.

Cantor, T. R. 1984. Review of penetrating radar as applied to nondestructive evaluation of concrete. In *In-situ/nondestructive testing of concrete.* ACI AP-82, ed. V. M. Malhotra, 581–601. Detroit: American Concrete Institute.

Carette, G. G., and V. M. Malhotra. 1984. In situ tests: Variability and strength prediction of concrete at early ages. In *In-situ/nondestructive testing of concrete.* ACI SP-82, ed. V. M. Malhotra, 111–41. Detroit: American Concrete Institute.

Carino, N. J. 1984. Laboratory study of flaw detection in concrete by the pulse-echo method. In *In-situ/nondestructive testing of concrete.* ACI SP-82, ed. V. M. Malhotra, 557–79. Detroit: American Concrete Institute.

Carino, N. J., H. S. Lew, and C. K. Volz. 1983. Early age temperature effects on concrete strength prediction by the maturity method. *ACI Journal Proceedings* 80 (2):93–101.

Carino, N. J., M. Sansalone, and N. N. Hsu. 1986. A point source-point receiver technique for flaw detection in concrete. *ACI Journal Proceedings* 83 (2):199–208.

Cather, R., J. W. Figg, A. F. Marsen, and T. P. O'Brien. 1984. Improvements to the Figg method for determining the air permeability of concrete. *Magazine of Concrete Research* 36 (129):241–45 (December).

Chaplin, C. A., and R. T. Kelly. 1967. The analysis of concrete. *Chemistry and Industry* September:1467–73.

Child, C. A. 1988. Checking carbonation and chlorides on site. *Concrete* 22 (5):19–21 (May).

DiCocco, J. B. 1973. *Quality assurance for portland cement concrete.* Report no. FHWA-RD-73-77. Washington: FHWA.

Dunagan, W. M. 1931. Proposed method of test for the field determination of the constituents of fresh concrete. *ASTM Proceedings* 31 (part 1):383–85.

Elvery, R. H., and L. A. M. Ibrahim. 1976. Ultrasonic assessment of concrete strength at early ages. *Magazine of Concrete Research* 28 (97):181–90 (December).

Figg, J. M. W. 1973. Methods of measuring the air and water permeability of concrete. *Magazine of Concrete Research* 25 (85):213–19 (December).

Forrester, J. A., P. F. Black, and T. P. Lees. 1974. *An apparatus for the rapid analysis of fresh concrete to determine its cement content.* Cement and Concrete Association of Great Britain technical report no. 42-490. April.

Gaynor, R. D. 1986. *Standard practice for rapid determination of water soluble chloride in freshly mixed concrete, aggregate and liquid admixtures.* NRMCA, TIL no. 437.

Halstead, W. J., and C. Ozyildirim. 1985. *Tests for early acceptance of concrete.* Final report. VHTRC 86-R2 (July). Charlottesville: Virginia Highway Transportation Research Council.

Hansen, A. J. 1981. The mini maturity meter. *Nordisk Betong* 4:13–15.

Hansen, A. J., N. S. Ottosen, and C. C. Peterson. 1984. Gas-permeability of concrete in-situ, theory and practice. In *In-situ/nondestructive testing of concrete.* ACI SP-82, ed. V. M. Malhotra, 343–56. Detroit: American Concrete Institute.

Head, W. J., H. M. Phillippi, P. A. Howdyshell, and D. Lawrence. 1983. Evaluation of selected procedures for the rapid analysis of fresh concrete. *Cement, Concrete, and Aggregates* 5 (2):88–103 (Winter).

Hime, W. G., and R. A. Willis. 1955. A method for the determination of the cement content of plastic concrete. *ASTM Bulletin* no. 209:37–43 (October).

Hope, B., and J. S. Poland. 1987. Determining the chloride content of fresh concrete. *Concrete International: Design and Construction* 9 (8):48–50 (August).

Howdyshell, P. A. 1971. *Laboratory evaluation of a chemical technique to determine water and cement content of fresh concrete.* CERL interim report M-97 (July).

Iddings, F. A., and J. L. Melancon. 1981. *Feasibility of development of a nuclear density gage for determining the density of plastic concrete at a particular stratum.* HPR

study no. 78-15. Final report FHWA/LA-81/149 (May). Louisiana Department of Transportation.

In-place methods for determination of strength of concrete. 1988. ACI Committee report 228.1R. *ACI Materials Journal* 85 (5):446–72.

Johansen, R. 1979. In situ strength evaluation of concrete: The break-off method. *Concrete International: Design and Construction* 1 (9):45–51.

Kasai, Y., I. Matsui, and M. Nagano. 1984. On-site rapid air permeability test for concrete. In *In-situ/nondestructive testing of concrete.* ACI SP-82, ed. V. M. Malhotra, 525–42. Detroit: American Concrete Institute.

Kelly, R. T., and J. W. Vail. 1968. Rapid analysis of fresh concrete. *Concrete* April:140–45.

Khoo, L. M. 1986. Pullout technique—An additional tool for in-situ concrete strength determination. In *In-situ/nondestructive testing of concrete.* ACI SP-82, ed. V. M. Malhotra, 143–60. Detroit: American Concrete Institute.

Klieger, P. 1958. Effect of mixing and curing temperature on concrete strength. *ACI Journal Proceedings* 54:1063–81 (June).

Lawrence, D. 1984. Getting quality assurance right now. *Concrete Construction* 29 (3):317–21 (March).

Levitt, M. 1971. The ISAT—A non-destructive test for the durability of concrete. *British Journal of Non-Destructive Testing* 13 (4):106–12 (July).

Malhotra, V. M. 1974a. Maturity concept and the estimation of concrete strength: A review—I. *Indian Concrete Journal* 48:122–126 and 138 (April).

Malhotra, V. M. 1974b. Maturity concept and the estimation of concrete strength: A review—II. *Indian Concrete Journal* 48:155–59 and 170 (May).

Malhotra, V. M. 1976. *Testing hardened concrete: Nondestructive methods.* ACI monograph no. 9. Detroit: American Concrete Institute, Iowa State University Press.

Malhotra, V. M. 1986. In-situ/nondestructive testing of concrete: A global review. In *In-situ/nondestructive testing of concrete.* ACI SP-82, ed. V. M. Malhotra, 1–16. Detroit: American Concrete Institute.

Manning, D. G. 1985. *Detecting defects and deterioration in highway structures.* NCHRP 118. Washington: Transportation Research Board.

Mascunana, I. 1979. *Field testing of the consolidation monitoring device.* Final report (January). Illinois Department of Transportation.

Mehta, P. K. 1986. *Concrete: Structure, properties, and materials.* Englewood Cliffs, N.J.: Prentice-Hall, Inc.

Millard, S., and R. Wormald. 1989. Study supports simple tests for chloride counting. *Concrete* 23 (1):17–21 (February).

Mitchell, T. M. 1973. *A radioscope backscatter gage for measuring the cement content of plastic concrete.* FHWA-RD-73-48 (April). Washington: FHWA.

Mitchell, T. M. 1982. Progress report on the CMD: A device for continuous monitoring of the consolidation of plastic concrete. *Public Roads* 46 (2):66–72 (September).

Mitchell, T. M., P. L. Lee, and G. S. Eggert 1979. The CMD: A device for continuous monitoring of the consolidation of plastic concrete. *Public Roads* 42 (4):148–55 (March).

Montgomery, F. R., and A. Adams. 1985. Early experience with a new concrete permeability apparatus. In *Proceedings of Second International Conference on Structural Faults and Repair,* 359–63. Edinburgh: Engineering Technics Press.

Nagele, E., and H. K. Hilsdorf. 1980. A new method for cement content determination of fresh concrete. *Cement and Concrete Research* 10:23–24.

Naik, T. R., and B. W. Ramme. 1989. Determination of the water-cement ratio of concrete by the buoyancy principle. *ACI Materials Journal 86* (1):3–10 (January-February).

NCHRP. 1990. Determination of water:cement ratio in fresh concrete. *Research Results Digest,* no. 174 (September).

North Dakota State Highway Department. Materials and Research Division. 1978. *Determination of water content of plastic concrete using a microwave oven.* Item (4)-77B. September.

Recommended practice for evaluation of strength test results of concrete. 1990. In *ACI manual of concrete practice, 1990.* Part 2, *Construction practices and inspection,* 214-3, 214-14. Detroit: American Concrete Institute.

Sansalone, M., and N. J. Carino. 1989. Detecting delaminations in concrete slabs with and without overlays using the impact-echo method. *ACI Materials Journal 86* (2):175–84.

Schonlin, K., and A. Hilsdorf. 1987. Evaluation of the effectiveness of curing of concrete structures. In *Concrete durability: Katharine and Bryant Mather International Conference.* ACI SP-100, ed. J. M. Scanlon, 207–26. Detroit: American Concrete Institute.

Standard test method for air content of freshly mixed concrete by the pressure method. *1990 annual book of ASTM standards.* 4.02:134–41.

Standard test method for air content of freshly mixed concrete by the volumetric method. *1990 annual book of ASTM standards.* 4.02.

Standard test method for slump of hydraulic cement concrete. *1990 annual book of ASTM standards.* 4.02:85–87.

Swamy, R. N., and A. H. M. S. Al-Hamed. 1986. Evaluation of the Windsor Probe Test to assess in situ concrete strength. *Proceedings of the Institution of Civil Engineers.* Part 2, *Research and Theory* 77:167–94 (June).

Tom, J. G., and A. D. Magoun. 1986. *Evaluation of procedures used to measure cement and water content in fresh concrete.* NCHRP report no. 284 (June). Washington: Transportation Research Board.

U.S. Army Construction Engineering Research Laboratory. *Conference proceedings, M-128: Rapid testing of fresh concrete,* ed. P. Howdyshell. May 1975.

Vogt, W. L., V. Beizai, and R. L. Dilly. 1986. In-situ pullout strength of concrete with inserts embedded by finger placing. In *In-situ/nondestructive testing of concrete.* ACI SP-82, ed. V. M. Malhotra, 161–76. Detroit: American Concrete Institute.

Walker, S., D. L. Bloem, R. D. Gaynor, and J. R. Wilson. 1961. A study of the centrifuge test for determining the cement content of fresh concrete. *ASTM Material Research and Standards* 1 (6):454–60 (June).

Whiting, D. 1986. In-situ measurement of the permeability of concrete to chloride ions. In *In-situ/nondestructive testing of concrete.* ACI SP-82, ed. V. M. Malhotra, 501–24. Detroit: American Concrete Institute.

Whiting, D. A., and S. D. Tayabji. 1988. *Relationship of consolidation to performance of concrete pavements.* FHWA/RD-87/095 (February). Washington: FHWA.

Williamson, G. 1985. Methods for determining the water and cement content of fresh concrete. *Materials and Structures* no. 106:269–79 (July-August).

7

Quality Control/Quality Assurance Functions

Quality Assurance Schemes and Their Implementation

The term *quality assurance*, as used in the transportation field, generally refers to a comprehensive system of activities designed to ensure that the quality of the end product meets the specifications under which it was produced (Willenbrock and Marcin 1978). Quality assurance should be distinguished from the term *quality control*, which refers to the activities that make the quality of a product what it should be (*Quality Assurance* 1979). Quality assurance addresses the overall problem of obtaining the desired quality of product in the most efficient, economical, and satisfactory manner possible.

The concept of what constitutes a quality assurance system has changed over the last two decades. Traditionally, quality assurance meant verifying conformance to specifications that spelled out, in detail, the exact method of construction (*Quality Assurance* 1979; Latham 1982). Under this method of specifications, the owner-agency explicitly outlined the exact materials and procedures to be used by the contractor and performed the quality control inspections As long as the contractor adhered to prescribed methods and procedures, acceptance of the product was essentially automatic, and the contractor could expect full pay.

More recently, an approach utilizing statistical end-result specifications has been given greater emphasis (*Quality Assurance* 1979; Latham 1982; Barros, Weed, and Willenbrock 1983; Afferton, Friedenrich, and Weed 1990a; Afferton, Friedenrich, and Weed 1990b). End-result specifications describe the required characteristics and quality of the final product (*Statistically oriented end-result specifications* 1976). The responsibility for the

quality of the product is shifted from the owner agency to the contractor, who is given considerable flexibility in deciding how to satisfy the requirements, along with the responsibility of quality control. The acceptability of the finished product is determined by the specifying agency, on the basis of sample testing. Partial payments based on a pre-established payment schedule are made for the products failing to meet the specification requirements.

The term *statistical quality assurance* (SQA) has been introduced to describe quality assurance systems utilizing statistical end-result specifications. These systems utilize statistical concepts in the inspection and testing for acceptance, as well as for determining payment schedule. *Statistically oriented end-result specifications* (1976) describes the fundamental concepts of SQA. Another perspective on the subject is given by Afferton, Friedenrich, and Weed (1990a and 1990b).

In the last several years, there has been a growing interest in the development of performance-related specifications (PRS's). PRS's relate specific material and construction (M&C) properties or characteristics to pavement performance (Irick et al. 1989). In this sense, they are really refined end-result specifications in which the relationship between the specification and some aspect of pavement performance is well known. PRS's are designed to reward contractors for constructing better pavements than specified and to penalize them for building poorer pavements. The amount of the penalty or reward depends on the significance of the construction parameter and the deviation to the pavement performance. For example, heavy penalties would be assessed for falling 1/2 inch (13 mm) below the slab thickness, but the penalties would be minimal for falling 1/2 inch (13 mm) below the subbase thickness.

Quality Assurance Schemes for Concrete Pavement Construction

In concrete pavement construction, two basic schemes of quality assurance can be identified on the basis of the type of specification employed. They are the following:

- Traditional—Utilizing method specifications
- SQA—Utilizing either statistical end-result or performance specifications

The differences between the two approaches are summarized in Figure 7.1.

Traditional System

The traditional method of specification is also commonly referred to as the recipe method because the specifications spell out in detail the operation of the contractor, the equipment to be used, and the desired end product. Quality assurance in this method consists

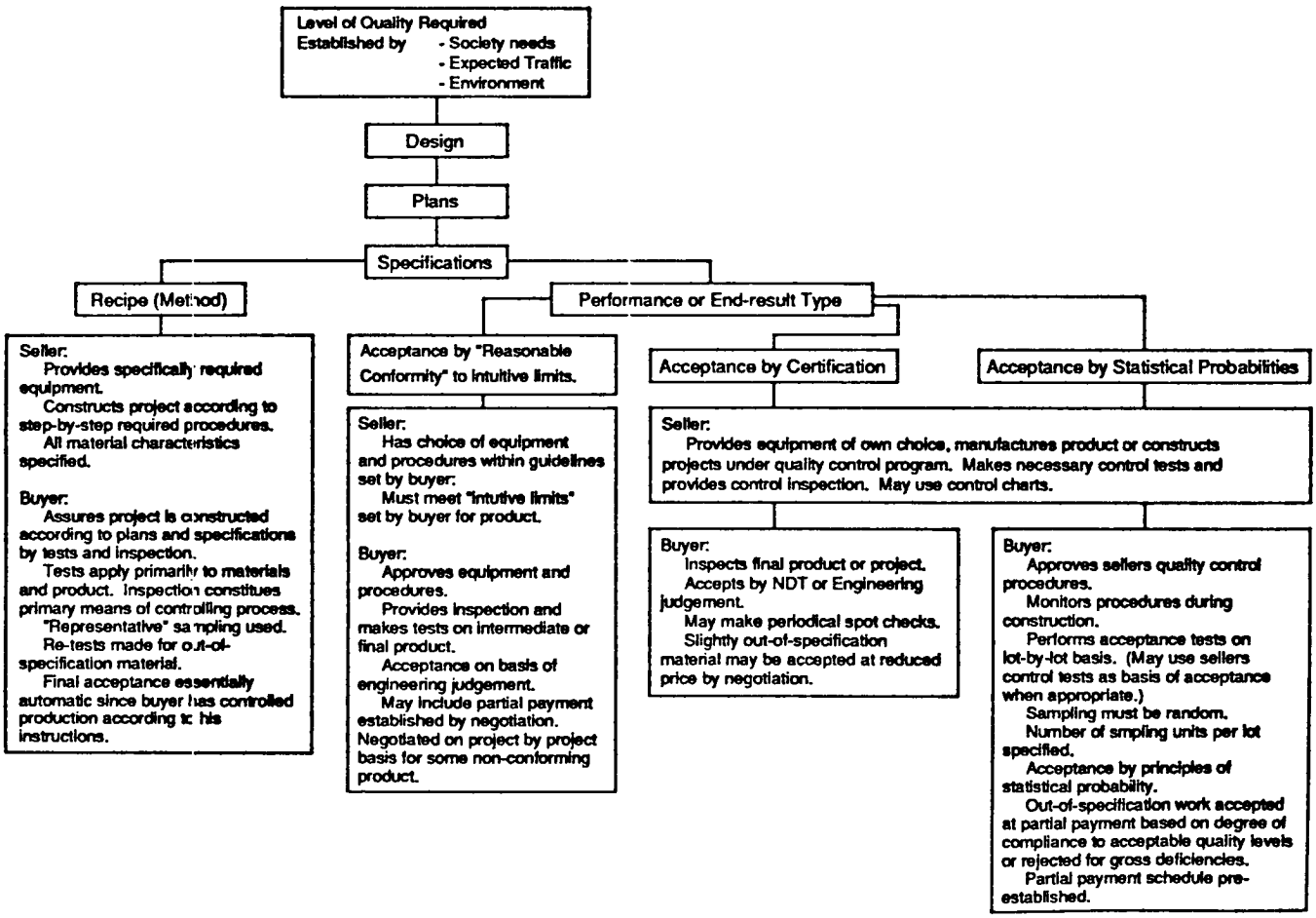

Figure 7.1. A comparison of quality assurance systems for highway construction (*Quality assurance* 1979).

primarily of verifying conformance to the specification requirements. This type of specification came about because adequate quality assurance definitions and test methods pertaining to the quality of the end product were lacking (McMahon and Halstead 1969).

In many cases, the quality requirements, if specified at all, are intuitively established by experience.

Tests are performed on intermediate materials or products for quality control. These tests are normally performed by the specifying agency, and unless noncompliance is indicated, only one representative sample per lot is tested (*Quality Assurance* 1979; McMahon and Halstead 1969). Recognizing that certain amounts of out-of-specification materials or construction are difficult to avoid but tolerable, most states and FHWA have adopted a doctrine of substantial compliance (*Quality Assurance* 1979). The specifications clearly state that 100% compliance is not always possible and that the deviations will be dealt with on a case-by-case basis. When test results show noncompliance, engineering judgment is used to decide whether the material should be retested or should be considered in substantial compliance. If the retest results are in compliance, the material or product is accepted.

Although this approach to quality assurance is workable under proper conditions, *substantial compliance* is difficult to define and very difficult to defend when the engineering judgment is challenged (*Quality Assurance* 1979). According to McMahon and Halstead (1969),

> *When traditional specifications are combined with the skills of engineers, the complete cooperation of contractors, and the desire of everyone to do a good job, there is no doubt that a good highway can be built. However, inspectors and engineers must be capable of recognizing good materials and construction without relying solely on quality measurements.*

The engineer's ability to judge quality without relying on test results is important in this method because, in many cases, sampling and testing errors are so large that the test results are not good indicators of the true quality of the finished highway (McMahon and Halstead 1969). In addition, the traditional systems often utilize test procedures that do not measure the quantities that are closely linked to pavement performance.

SQA System

SQA provides a convenient and practical way of dealing with the variabilities and marginal-quality products that are an inherent part of pavement construction (Barros, Weed, and Willenbrock 1983; Afferton, Friedenrich, and Weed 1990a). In SQA, statistical end-result specifications are used to define the characteristics and quality requirements of the finished product, and much of the details on how to meet the requirements are left to

the contractors. The contractors are responsible for quality control, and the specifying agency determines the acceptability of the finished product by testing random samples. Statistical concepts are used to develop random sampling plans, acceptance procedures, and adjusted pay schedules.

Measure of Quality

The most popular measure of quality is the concept of percent defective (Barros, Weed, and Willenbrock 1983). The term *defective* in this case refers to the work falling outside specification limits. This concept is generally applicable to any construction quality characteristic. It is very important that good engineering judgment is used in setting the specification limits for successful implementation of SQA. LaHue (1978) comments on this point:

> . . *Therefore, the best place to utilize good engineering judgment is not in the acceptance of the product, but is instead in the development of specifications that are based on achievable requirements. The use of good engineering judgment at this level and providing the field engineers with a basis for determining acceptability will lead to defensible specifications that can be uniformly applied to any project under the supervision of any engineer.*

It is assumed that the defects are normally distributed, and the samples selected for quality measurements are randomly selected. The percent defective of the construction parameter of interest is estimated from the mean and standard deviations of the measured quality. From the mean and standard deviations, and the lower or upper limits (or both) of the acceptable construction parameter quality, the probability of the parameter quality falling outside of the acceptable range can be determined by using a probability table (Barros, Weed, and Willenbrock 1983). This probability is an estimate of the percent defective.

Acceptance Plan

In SQA, two quality levels are defined for acceptance purposes: the acceptable-quality level (AQL) and the rejectable-quality level (RQL) (Barros, Weed. and Willenbrock 1983; Afferton, Friedenrich, and Weed 1990a; Afferton, Friedenrich, and Weed 1990b). These quality levels are defined in terms of percent defective. AQL is the minimum level of quality that the specifying agency is willing to accept at 100% payment. RQL is that level of quality below which either repair or removal and replacement may be necessary. At quality levels in between the AQL and RQL, the work is accepted at reduced payment. A common setting for AQL is 10% defective, whereas the typical range for the RQL is 40–60% defective (Barros, Weed, and Willenbrock 1983).

Because work produced at different times or under different conditions can have significantly different quality, lot size must be carefully defined for acceptance. Typically, lot size is defined as a day's production, or a set quantity—tons or cubic yards of material, square yards of construction, etc. (Barros, Weed, and Willenbrock 1983; *Statistically oriented end-result specifications* 1976). The sample size also has a significant effect on the accuracy of the quality estimates; therefore, the sample size is stipulated in the specifications.

When work is accepted on the basis of statistical concepts, two types of risks are always present (Barros, Weed, and Willenbrock 1983; Afferton, Friedenrich, and Weed 1990b; *Statistically oriented end-result specifications* 1976): the risk of rejecting (or penalizing with reduced payment for) acceptable-quality work (seller's risk), and the risk of accepting (or paying full price for) rejectable-quality work (buyer's risk). The risks to both parties can be reduced by increasing the sample size, but doing so increases the cost of the project. Statistical procedures are available for setting the tolerable level of quality for a given sample size to reduce the risks to a desirable level.

Adjusted Pay Schedule

The basic concept of an adjusted pay schedule is to award payments proportional to the level of quality achieved. Ideally, pay should be related to the performance of the pavement; however, the data relating the quality measures to pavement performance were not available in the past. Therefore, the pay schedule in many cases was established arbitrarily. As a result, there has been a great disparity between the amount paid by different agencies for the same quality work (Afferton, Friedenrich, and Weed 1990a; Weed 1984). This has been one of the issues which created resistance to adopting SQA.

The AASHTO road test generated a wealth of data relating quality measures to pavement performance (*Quality assurance* 1979; Weed 1984). By using this information, a logical pay schedule utilizing the principle of liquidated damage has been developed. The idea behind this approach is to withhold sufficient payment at the time of construction to cover the cost of repairing the damages resulting from the defective work (Weed 1984). In theory, the same principle that calls for reduced payment for poor-quality work also calls for bonus payment for exceptional-quality work that would extend pavement life.

There are two basic types of pay schedules: stepped and continuous. Stepped pay schedules define discrete intervals of the quality measure and assign a specific pay factor for each interval. Table 7.1 show a typical stepped pay schedule. The following equation is an example of a typical continuous pay schedule (Weed 1984):

$$PF = 105 - 0.5*PD$$

where PF = pay factor
PD = percent defective

Table 7.1. Typical stepped pay schedule (Barros, Weed, and Willenbrock 1983).

Range of % defective	Pay factor (%)
0.0 – 10.00	100
10.01 – 20.00	95
20.01 – 30.00	90
30.01 – 40.00	80
40.01 – 50.00	70
50.01 –100.00	50*

*Any lot that exceeds 50.00% defective will be considered unacceptable and may be required to be removed and replaced at the expense of the contractor. If, for practical purposes, this option is not exercised, the lot may remain in place and receive the minimum pay factor of 50%.

Currently, stepped pay schedules are more common; however, continuous pay schedules are rapidly gaining popularity (Weed 1984). The problem with the stepped pay schedules is that the difference between two adjacent intervals can be substantial; when the quality measure happens to fall close to an interval boundary, disputes over the measurement accuracy can result. With continuous pay schedules, there is a better correlation between the achieved quality and the payment awarded.

It is important that 100% payment is made for acceptable-quality work for the successful implementation of SQA; however, this is not statistically possible unless the maximum pay factor is set greater than 100%. This is because when the average quality of work is at AQL, some work has quality higher than AQL and some work has quality lower than AQL. If partial payment is made for the quality of work falling below the AQL, but only 100% payment is made for the quality of work falling above AQL, then the average payment for acceptable quality work will be less than 100%. When the AQL is set at 10% defective, the average pay factor for AQL work is about 93% (Barros, Weed, and Willenbrock 1983). The maximum pay factor must be set greater than 100% to ensure 100% payment for acceptable-quality work (Figure 7.2). Many of the pay schedules being used do not pay 100%, on the average, for acceptable-quality work. Either bonus payment or credit systems may be used to correct this problem.

Implementation of SQA

Because of the radical departure from the traditional approach to quality assurance, SQA met with much resistance during its early applications. Much of the early resistance has been the result of misunderstanding the concept as well as the usual resistance to change. The following recommendations may reduce contractors' fears concerning SQA (*Quality assurance* 1979):

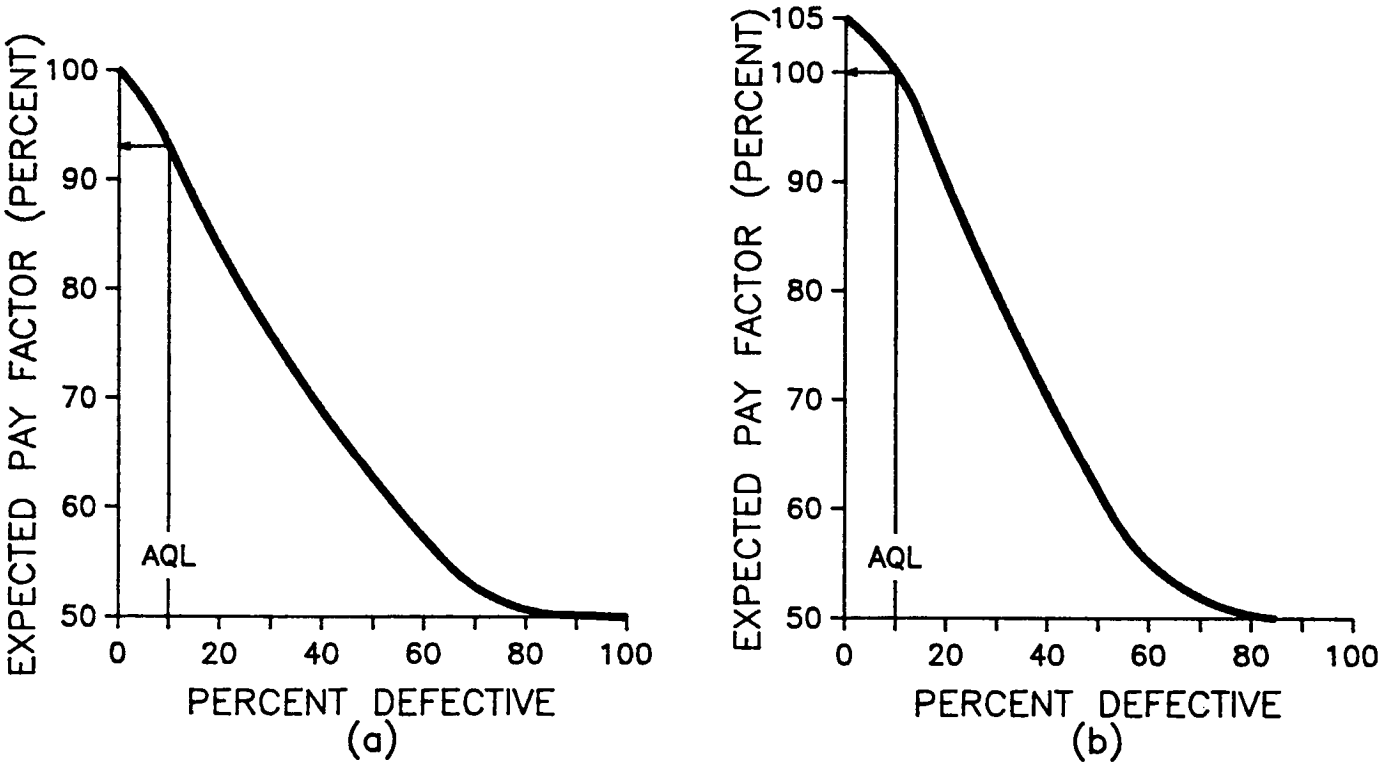

Figure 7.2. Examples of expected pay curves for maximum pay factors at 100% (a) and 105% (b) (Barros, Weed, and Willenbrock 1983).

- A phasing-in period should be allowed for application of partial payment schedules. During this period, contractors would be informed of deviations, but the reduced payment provisions would not be applied. This is intended to allow both the state and the contractors to become familiar with the operations of the system and its implications.

- Incentive pay provision should be included to allow payment greater than 100% of the bid price. In general, this would be based on a greater-than-average percentage of material within the designated limits.

- Nonbiddable items should be included in the contract for the necessary quality control tests. This is to recognize the reluctance of some contractors to establish quality control testing by their own personnel. Costs for each required test would be established so that the total cost for quality control testing would not be used in determining the low bidder.

These recommendations address the majority of problems faced in implementing SQA; however, the greatest obstacle appears to remain general resistance to change. Some states are reluctant to abandon something that everyone is familiar with and that works reasonably well most of the time for something that requires an adjustment in thinking as well as changes in contractor-state relations (*Quality assurance* 1979).

New Jersey had success by involving construction industry representatives during the development stage of SQA and phasing in the new approach (Afferton, Friedenrich, and Weed 1990a). They observed a slight increase in the bid costs in the beginning, but costs have now dropped back as the contractors have become more familiar with SQA. Oklahoma has developed a training course in cooperation with the School of Civil Engineering at Oklahoma State University to train DOT employees as well as contractors (Erwin 1991).

Current Status of Quality Assurance Systems

There is a strong trend toward developing and adopting SQA. SQA systems are currently being used, or under development, in about three-quarters of the states (Afferton, Friedenrich, and Weed 1990a). About half of the states are actively using this approach, and another one-quarter have statistical specifications in various stages of development. Almost all states that have tried SQA continue to use it.

Despite the apparent progress, Afferton, Friedenrich, and Weed (1990a) warn about possible problems:

> *Although SQA appears to be performing well, there is a distinct possibility that this might be illusory in many cases. Many current practices and published*

standards pertaining to SQA are far from optimal and some may actually be incorrect. Unfortunately, there often is no immediately obvious indication when a statistical procedure is misapplied. Instead, there may simply be a false sense of security that most likely will be paid for in terms of premature failures and costly repairs in the future.

The next step in the development of SQA is the use of PRS in place of end-result specifications. Within the past few years, much emphasis has been placed on PRS. FHWA has recently made the development of PRS one of its high-priority national program areas (*Performance related specs* 1988). The conceptual framework for PRS was originally developed for asphalt pavements (Anderson et al. 1990). On the basis of this framework, a demonstration PRS system for PCC pavements has been developed (Irick et al. 1989). The new PRS does produce results; however, Irick et al. (1989) point out several problems that must be resolved before the new PRS can be reasonably applied to rigid pavements, including the following:

- Development of acceptance plan. New Jersey has a good plan that could serve as a starting point in developing plans for wider application.

- Treatment of M&C variability. The demonstration PRS does not address the effects of variability in the material properties and construction characteristics delivered by the contractor. The system does not have a provision for awarding contractors for providing products with less variability.

- Development of optimum M&C variables to be evaluated during construction. The demonstration PRS uses three M&C variables: initial profile, slab thickness, and 28-day compressive strength.

- Selection of optimum distress variables. The demonstration system uses only the serviceability history in the analysis process. At some point, it may be better to consider more types of distress. The current system calculates and displays pavement distress values by using the COPS equations.

- More rational selection of cost evaluation procedures. Rational procedures for determining the economic life of the pavement must be developed.

- Development of operating characteristic curves for payment plans that consider prediction equation uncertainties.

FHWA has developed a program combining laboratory studies and accelerated and long-term field studies to quantify the relationships between M&C variables and pavement performance for use in PRS (*Performance related specs* 1988). FHWA has sponsored parallel studies for AC and PCC pavements. The research in each material area is being

coordinated with that in the corresponding SHRP area, as well as in SHRP's long-term pavement performance project.

Expected Future Trends

The trend toward favoring SQA systems is expected to continue. The states that have implemented SQA have provided strong endorsements (Afferton, Friedenrich, and Weed 1990). The advantage of SQA is that it recognizes the variabilities inherent to pavement construction and provides a logical and equitable means of dealing with them. Statistical specifications are easier to write, interpret, enforce, and apply (*Quality assurance* 1979; Latham 1982; Afferton, Friedenrich, and Weed 1990a; McMahon and Halstead 1969). In addition, they promote innovation by allowing contractors greater freedom in determining how to meet the specification requirements. SQA is in use or under development in approximately three-quarters of the states (Afferton, Friedenrich, and Weed 1990a).

It is expected that high priority will be given to the development and implementation of PRS. In 1988, FHWA made the development of PRS one of its high-priority national program areas (Erwin 1991). Studies are under way to quantify the relationships between materials and construction variables and pavement performance for use in PRS (Weed 1984). It is expected that the results of the studies will contribute to reducing the use of nonessential tests and to providing a rational basis for pay adjustments.

For quality assurance systems, training appears to be a major area of concern. It has been pointed out (*Quality assurance* 1979) that:

> *In the case of quality assurance systems, the needs for better understanding, training, and implementation outweigh the need for research. This is especially true of establishing improved criteria for sampling, testing and inspection of materials.*

Similar concerns were reflected in a more recent paper by Afferton, Friedenrich, and Weed (1990a):

> *Ironically, all the necessary statistical tools are well developed and readily available. What is lacking, however, is a widespread willingness to use them.*

It is expected that much emphasis will be placed on training and education to promote wider use of SQA.

References

Afferton, K. C., J. Friedenrich, and R. M. Weed. 1990a. *Managing quality: Time for a national policy.* Part I, *Facing the problem.* Morristown: New Jersey Department of Transportation.

Afferton, K. C., J. Friedenrich, and R. M. Weed. 1990b. *Managing quality: Time for a national policy.* Part II, *Fundamental concepts.* Morristown: New Jersey Department of Transportation.

Anderson, D. A., D. R. Luhr, C. E. Antle, et al. 1990. *Performance-related specifications for hot-mix asphaltic concrete.* Prepared for National Cooperative Highway Research Program, Project no. HR 10-26A. Washington: National Research Council, Transportation Research Board.

Barros, R. T., R. M. Weed, and J. H. Willenbrock. 1983. Software package for design and analysis of acceptance procedures based on percent defective. *Transportation Research Record* 924:85–93.

Erwin, J. 1991. QC/QA training boosts contractor confidence. *Roads & Bridges* 29 (5):57 and 67 (May).

Irick, P. E., S. B. Seeds, M. G. Meyers, and E. D. Moody. 1989. *Development of performance-related specifications for PCC construction.* Report no. FHWA-RD-89-211 (final report). McLean, Va.: FHWA, Office of Engineering and Highway Operations R&D.

LaHue, S. P. 1978. National trends in quality construction. Paper presented at conference, Quality in Construction, Austin, Texas.

Latham, J. 1982. Method versus end spec. *Civil Engineering* May:22–28.

McMahon, T. F., and W. J. Halstead. 1969. Quality assurance in highway construction. Part I, Introduction and concepts. *Public Roads* 35 (6) (February).

Performance-related specifications for highway construction. 1988. High priority national program area, Materials Division, HNR-30. McLean, Va.: FHWA.

Quality assurance. 1979. NCHRP synthesis of highway practice no. 65. Washington: Transportation Research Board.

Statistically oriented end-result specifications. 1976. NCHRP synthesis of highway practice no. 38. Washington: Transportation Research Board.

Weed, R. M. 1984. Adjusted pay schedules: New concepts and provisions. *Transportation Research Record* 986:32–37.

Willenbrock, J. H., and J. A. Marcin. 1978. Development of process control plans for quality assurance specifications. Paper presented at the annual meeting of the Transportation Research Board, Washington, D.C., January.

Appendix

European Highway Concrete Practice

1. Definition of Highway Concrete Practice for the Report

For the purpose of this report highway concrete practice is considered to consist of a number of interrelated disciplines, as follows:

- Design concepts (jointing, reinforcement etc.)
- Concrete mix proportioning (including admixtures)
- Placement (slipform paving, fixed form paving etc.)
- Curing (moisture and temperature control etc.)
- Maintenance (surface treatment, repair etc.)

This report has the following general outline:

- Presentation of current technology, new development and projected future trends in selected European countries, i.e. Belgium, Denmark, Finland, France, Germany, Sweden and the UK on a country to country basis
- A narrative summary which presents in a very condensed form what is perceived as being current and future trends in European highway concrete technology

This report emphasizes concepts and trends related to concrete highway construction. Those desiring more detailed information concerning design specifications in a number of European countries are advised to consult the summary table prepared by Jofré and Kraemer (1).

2. Belgium

Belgium has many years' experience in the use of concrete for pavement construction. The country has the largest percentage of concrete pavements in Europe; the earliest were built in 1910 to 1920 (2). In contrast to most other countries, concrete pavements in Belgium are also used for less trafficked roads (3). The widespread use of concrete for pavement construction is partly due to the strong position of the Belgian steel and cement industries.

In 1986, between 16 and 58% of the Belgian roads had concrete pavements, depending on the type of road. For example, 36% of the freeways were paved with concrete. Since 1981 all freeways have been paved with continuously reinforced concrete (3), and it is anticipated that today nearly 50% of the Belgian freeways are paved with concrete (4). This is partly due to a political decision to increase the number of concrete pavements (3).

The oldest concrete pavements were designed as undowelled with a relatively large joint spacing, from 33 to 50 ft (10 to 15 m). This design, combined with an unbound base and heavy traffic, resulted in defects such as cracks, faulting of slabs as a result of pumping, and blow-ups (3). In order to reduce these types of defects the distance between joints was decreased to 16 to 20 ft (5 to 6 m), expansion joints were abandoned in favor of contraction joints, and bound bases and dowelled joints were introduced for medium to heavily trafficked roads (3).

Continuously reinforced concrete pavements have been constructed frequently in Belgium since the early seventies, mainly for freeways. These pavements have exhibited high durability and low maintenance costs, especially as there are no joints requiring maintenance.

Design Concepts. Different design concepts are used in Belgium, depending on the traffic loads. For heavily trafficked roads the following concepts are normally used (5):

- Continuously reinforced concrete slabs on a lean concrete base with a granular subbase (the lean concrete base can be substituted with a cement bound granular base)

- Unreinforced concrete slabs on an unbound granular base

The continuously reinforced pavements are constructed without any joints other than construction joints. Normally 0.67% longitudinal reinforcement (related to the transverse cross sectional area of the concrete) and 0.08% transverse reinforcement is used. The reinforcement is placed at mid-depth in the pavement. The thickness of concrete pavements varies between 7 and 10 in. (18 and 25 cm), 8 in. (20 cm) being typical.

Unreinforced concrete pavements are normally constructed with a joint distance of 16 to 20 ft (5 to 6 m). The joints are dowelled, sawn and sealed. The thickness of unreinforced concrete pavements is typically 8 in. (20 cm).

The design life of concrete pavements in Belgium is usually 40 years.

Concrete Mix Proportioning. The resistance towards freeze/thaw action and deicing salts are important factors to be taken into consideration when proportioning concrete mixes. In Belgium the required resistance is obtained from the strength of the concrete and not by the use of air-entraining admixtures. Before 1980 a characteristic compressive strength of 8,700 psi (60 MPa) and a characteristic water absorption less than 6% by weight were required. These requirements led to a low slump concrete with a low workability. Even though construction problems occurred, the pavements have exhibited good durability.

In 1980, the required characteristic compressive strength was decreased to 7,300 psi (50 MPa) and the requirement regarding the maximum water absorption was removed. These changes led to construction of concrete pavements which exhibited scaling problems if the pavements were frequently subjected to deicing salts. Because of this, the specifications regarding compressive strength and water absorption prior to 1980 were reinstated in 1988 (4).

In addition to specifications regarding compressive strength and water absorption, concrete mix proportioning requirements for a maximum water/cement ratio of 0.45 and a minimum cement content of 630 lb/yd^3 (375 kg/m^3) are included in present specifications.

Placement. The usual method of placing is slipform paving with internal vibration. A special technique for creating a satisfactory surface texture has been developed in Belgium. This technique is called the "Exposed Aggregates Finishing". A set retarder is sprayed on the surface of the fresh concrete and the surface is covered with a plastic membrane. The following day the plastic membrane is removed and the mortar in the concrete surface is brushed away. After exposion of the aggregates, a curing membrane is sprayed on the new surface.

At present the Exposed Aggregates Finishing method is used for all concrete pavements in Belgium supporting high-speed and heavy traffic.

Curing. See above.

Maintenance. Resurfacing of existing highways with concrete is common practice in Belgium (6). During the last 10 years, approximately 310 miles (500 km) of highway with both concrete and bituminous pavements have been overlaid with "standard" continuously reinforced concrete (thickness 8 in. (20 cm) and 0.67% longitudinal steel) (7).

Experience in Belgium has shown that in some cases damage arises at construction joints in continuously reinforced concrete pavements due to insufficient vibration, causing air inclusions underneath the reinforcement bars. A special repair method, requiring only 48 hours closure of the road, has been developed for this type of damage.

The repair method is described briefly by Lefebvre (8):

- The part of the concrete slab to be replaced (including the reinforcement) is sawn away
- Holes for new reinforcement are drilled into the sawn surfaces
- The new reinforcement bars are sealed into these holes using very fast setting mortar

- New concrete containing an accelerating agent is poured
- The concrete is surface treated

New Developments and Projected Future Trends.

The experience in Belgium is that the resistance to cyclic freeze/thaw action and the use of deicing salts are important factors influencing the durability of concrete pavements. The effect of seven different surface treatments on the resistance to this type of exposure has been tested both in the laboratory and insitu by Petit et al (4). Of those tested, the most effective products were siloxanes, and Petit et al (4) state that siloxanes are a low cost treatment to extend road service life.

The Belgium Road Research Center has developed a method for the design of concrete pavements and overlays with the purpose of reducing fatigue cracking and large permanent deformations of the subgrade soil (5). Based on this method, a number of standard designs for discontinuous and continuously reinforced pavement or overlays have been developed and some of the pavement structures are presented by Veverka et al (5). The method of design is based on the theory of elastic slabs.

Bases of lean concrete are used extensively in Belgium and recent research has investigated the influence of fly ash on the properties of lean concrete. Bogaerts and Verhasselt (9) state that the appropriate proportion of fly ash appears to be in the region of 5% of the dry aggregate.

In connection with experiments concerning the use of fly ash in lean concrete, a new technique for the placement of lean concrete has been developed. The material is spread and compacted by means of a slipform paver fitted with poker vibrators for compaction (in contrast to spreading and grading by means of a grader and compaction by a roller).

Since the beginning of the eighties 205,000 yd^2 (171,000 m^2) of experimental sections of thin concrete overlays have been constructed in Belgium. Two types of thin overlays have been used: Steel fiber reinforced concrete overlays with a thickness of less than 6 in. (15 cm) and continuously reinforced overlays with a thickness of 4.5 to 6.5 in. (12 to 16 cm). The overlays were placed on old pavements, both concrete and bituminous (10). The two types of concrete overlays constitute alternatives to the traditional method of resurfacing pavements: overlays of standard continuously reinforced concrete (thickness 8 in. (20 cm), 0.67% longitudinal steel) (7).

The main conclusions to be drawn from the experiments are, according to Verhoeven (7), that thin steel fiber reinforced overlays appear to act well on bituminous underlays, especially if a new levelling course is used. The performance on underlays of portland cement concrete is dependent on the bond between the steel fiber reinforced layer and the

concrete. Thin continuously reinforced concrete overlays with a thickness of 5.5 in. (14 cm) and a 0.6% longitudinal reinforcement seem to act satisfactorily, although old concrete pavements require a bituminous interlayer (7).

3. Denmark

Concrete pavements were introduced in Denmark in the 1920s, but Denmark has not been a considerable user of concrete for pavement construction. The asphalt paving industry has traditionally been strong in this country, essentially rendering concrete pavements an uneconomical alternative.

According to Puckman (11), the development of the Danish practice for concrete pavement construction can be divided into the following three periods:

1923-1939 Fixed formwork, consolidation mainly by tamping

1954-1965 Fixed formwork, consolidation mainly by surface vibration

1967-1984 Slipforming, consolidation by internal and/or surface vibration

The design as well as the quality of the concrete pavements constructed in the three periods differ considerably (11).

Period I. Most of the concrete pavements from this period were constructed in the years from 1934 to 1939. Concrete pavements from the thirties were made from very dry and aggregate rich concretes. The denseness of the cement paste was generally high (water/cement ratio less than 0.4) and the aggregates used were innocuous. The high quality of the concrete ensured good durability of the concrete pavements, although the design appeared less than suitable including thin slabs, relatively large joint spacings, and often inferior subbases.

Period II. The design of concrete pavements were improved between 1954 and 1965. The thickness of the slabs was increased to approximately 8 in. (20 cm), and the joint spacing was reduced to 16 to 20 ft (5 to 6 m). Nevertheless, many of these concrete pavements did not exhibit satisfactory durability. The significant reasons for this were that the cement paste was less dense (the water/cement ratios were typically greater than 0.5) and that the concrete mixture was not suitable for the applied method of compaction. Surface vibration often resulted in segregation of the concrete and the formation of a surface layer with high porosity. Furthermore, alkali reactive aggregates were used, especially for the concrete pavements placed in the latter part of the period.

Period III. Slipform paving was brought into use in 1967. In the years from 1967 to 1969 several segments of freeway were constructed by slipform paving. The concretes had, as in Period II, too high a water/cement ratio and alkali reactive aggregates were used. Deterioration due to segregation and alkali-silica reactions occurred, and the pavements were repaved with bituminous overlays after only a few years. Comprehensive investigations were carried out to explain the low durability of these concrete pavements. Based on these investigations a 2.5 mile (4 km) long experimental pavement was constructed in 1976. This experimental pavement was placed by means of a slipform paver using concrete with a low water/cement ratio (0.4) and non-reactive aggregates. This pavement has exhibited satisfactory performance, and based on the experiences with this pavement, a 4.4 mile (7.1 km) long concrete freeway was constructed in 1984.

The general experience in Denmark is that the principal factors influencing the durability of concrete pavements are the denseness (water/cement ratio) of the hardened cement paste and the resistance of the aggregate to deleterious alkali-silica reactions. The expected relationship between the amount of entrained air in the concrete and its resistance to freeze-thaw action has been absent in concretes with water/cement ratios less than 0.4 and non-reactive aggregates. The non-air-entrained older concrete pavements have proven more durable than some of the more recently placed air-entrained pavements with regard to frost resistance. This may, in part, be due to the fact that some of the most recent concrete pavements were constructed as experimental projects where there were frequent changes in the approach to allow a parametric study. These frequent changes were not conducive to production of homogeneous and high quality concrete.

As mentioned before, only very few concrete pavements have been constructed in Denmark in recent years. Because of this, a typical Danish design and construction practice for concrete pavements cannot be described. Instead, descriptions of practices used in recent freeway pavement construction (12) are given below.

Design Concepts. The structure of the most recently constructed concrete pavement consists of unreinforced short concrete slabs on a cement treated base. The slab thickness is 8 in. (20 cm) and the thickness of the base is 6 in. (15 cm). The distance between transverse joints is 16 ft (5 m). The transverse joints are dowelled and tie bars are placed in the longitudinal joints.

Concrete Mix Proportioning. The concrete contains Type V cement and 10% silica fume slurry (50% solids) by weight of cement. The air content is approximately 7% by volume of the concrete, and the 7-day compressive strength is approximately 4,800 psi (33 MPa). The cement content is 500 lb/yd^3 (300 kg/m^3), and air-entraining and superplasticizing admixtures are used.

Placement. The pavements were slipformed and compacted by internal and surface vibration. A method for the establishment of a satisfactory surface texture based on Belgian experiences was introduced. In order to achieve the required skid resistance, the

top part of the aggregate was exposed using an approach akin to that used by precast concrete element manufacturers.

A diluted sugar solution was applied to the freshly finished pavements prior to covering with polyethylene sheeting. After one day, the sheeting was removed, the joints were cut and the top layer of mortar was removed by water jetting. Subsequently, a curing membrane was applied to the new top surface of the pavement.

Curing. See above.

Maintenance. The pavements which were placed in Period I have generally only required superficial maintenance. Several of the pavements constructed in the fifties and sixties have exhibited significant damage due to segregation and alkali-silica reactions. These pavements have received bituminous overlays. These overlays are the subject of ongoing maintenance.

New Developments and Projected Future Trends

The research community in Denmark is currently devoting a substantial amount of effort to reinstating concrete as a viable material for highway pavement construction. As such, a number of research projects and full-scale demonstration projects are currently under way.

A research and development project concerning roller compacted concrete (RCC) was started by the Aalborg Portland company in 1986. The purpose of the project is to improve the technology for the production of RCC so that RCC would be an alternative to asphalt paving with regard to economy and durability. This project has led to the development of a new type of concrete called "Stabilbeton".

Stabilbeton is described by Bager (13) as a very dry, aggregate rich high strength concrete. It contains approximately 340 lb/yd^3 (200 kg/m^3) of cement, fly ash, silica fume, four to five fractions of aggregate and a superplasticizing admixture (14). Stabilbeton can be compacted by means of a paver alone, in contrast to traditional RCC which also requires compaction by means of a roller.

The advantages of Stabilbeton are, according to Bager (13):

- Stabilbeton can be placed and compacted by means of an asphalt paver with a heavy and high-compaction screed

- Stabilbeton is mechanically stable and can be trafficked by light traffic immediately after placement and compaction (15)

- Stabilbeton has a high resistance to freeze/thaw action, because of the high strength level

The concrete mix proportion of Stabilbeton is covered by patents owned by the Danish Densit company.

The design of the material and the placement technique for Stabilbeton are being further refined through Aalborg Portland's participation in the project ECOPAVE (ECOnomic PAVEment) (16). The project is supported by EEC under the BRITE programme (Basic Research in Industrial Technologies for Europe) and is being carried out as a Danish-English cooperation project between the following five partners: TH Technology and the Transport Research Laboratory (TRL) from England; and The Danish National Road Laboratory, Dansk Beton Teknik, and Aalborg Portland from Denmark.

The project started in 1988 and is anticipated to be completed in 1992. The purpose of the project is to combine the optimal properties of concrete pavements and bituminous pavements (16). The ECOPAVE pavements will consist of a concrete load-carring slab surfaced with an asphalt wearing course. Both laboratory experiments and full-scale trials will be made during the project.

The experiments include the investigation of two crack control systems: Promoting intrinsic micro-cracking and mechanically induced micro-cracking.

"Kompaktbeton" is another new concrete product from the Densit company. Kompaktbeton is a high strength concrete with a 28-day compressive strength in the area between 16,000 and 22,000 psi (110 and 150 MPa). The microstructure of Kompaktbeton is very dense, and Kompaktbeton can be placed by means of an asphalt paver (like Stabilbeton). The material has a high abrasive strength, good frost resistance and good resistance towards salts, acids and organic solvents compared with traditional concrete pavements (17). Kompaktbeton has been placed on several indoor areas, for example, industrial floors. The material has only been placed on an experimental basis outdoors, but it is anticipated (17) that the material will also perform well in exposed environments.

In Denmark great attention has traditionally been given to resistance towards freeze/thaw action. Methods for the estimation of air content and pore size distribution are therefore major items of interest. A method for the determination and control of the air content in fresh concrete has been developed in Denmark. The method is called the Dansk Beton Teknik (DBT-method). A mortar sample is taken from the compacted, unset concrete, and injected by means of a syringe into the DBT air-void measuring equipment. The mortar sample is stirred, and the air bubbles rise up into the surrounding liquid (glycerol-type). Above the special liquid is a glass cylinder with water, through which the air bubbles rise to a glass bell, where they gather. The air-void distribution, the air-void content L300 (the content of small, almost spherical air voids with a diameter up to approximately 1/10 in. (0.3 cm)) and the spacing factor can be determined by measurement

of the upward thrust which the bubbles exert on the bell.

The DBT-method has been used on a trial basis in other countries, such as Germany (18).

4. Finland

In Finland, concrete is seldom used for road construction. Suonio (19) gives two reasons for the disinclination to use concrete for road construction: concrete pavements are considered more expensive than other types of pavements and technical problems can arise due to the severe climate and soil conditions.

Approximately 431,000 yd^2 (360,000 m^2) of concrete pavement was placed in Finland in the years from 1926 to 1939. After the Second World War only 191,000 yd^2 (160,000 m^2) of concrete pavement has been constructed (mostly on an experimental basis), but efforts have been made to keep up-to-date with respect to concrete pavement design and placement techniques (19). Accordingly, more recently constructed Finnish concrete pavements show good performance. Damage and deficiencies have been attributed to a lack of good equipment and craftmanship (19).

Problems requiring special attention in Finland are: wear due to the use of studded tires, consolidation problems due to construction of roads on weak and compressible soils, and damage due to heavy frost (19). A short description of the concrete technology used in the construction of the latest concrete pavements in Finland is given in the following sections.

Design Concepts. The typical concrete pavement is unreinforced and has a slab thickness of 8 in. (20 cm). The joint spacing is typically 16 ft (5 m), and joints are dowelled, sawn and sealed. Various types of bases are used; the predominant one being unbound bases of crushed gravel.

Concrete Mix Proportioning. Frost resistance and abrasion resistance are two factors which are particularly taken into account when proportioning concrete mixtures (19). The typical air content is between two and four percent, and frost resistant aggregates are used. Air-entraining and water-reducing admixtures are often used.

The 91-day compressive strength of concrete used for pavements is typically between 7,300 and 10,200 psi (50 and 70 MPa), and the water/cement ratio is typical in the range of 0.37 to 0.40.

Up to 60% ground granulated blast furnace slag (GGBFS) by weight of cementitious materials have been used. Generally, the use of up to 70% GGBFS by weight of cementitious materials is accepted in concrete for pavements and subbases. The requirements specify that fly ash is not to be used.

Placement. The most recently constructed concrete pavements in Finland have all been placed by means of slipform pavers. The required surface texture has been obtained by transverse brushing (with nylon or steel brushes).

Curing. A curing compound is sprayed on the surface after placement and texturing.

Maintenance. Several of the older Finnish concrete pavements have been repaved with a bituminous layer.

In design of new concrete pavements in Finland, it is recommended to increase the slab thickness for the purpose of reshaping (grinding) twice during the pavement's service life (20).

New Developments and Projected Future Trends

Two experimental composite concrete pavements have been constructed since 1982. They are both two-layer constructions placed by means of a slipform paver and compacted by means of a vibrating roller. The total thickness is 7 to 8 in. (18 to 20 cm), the upper layers having half the thickness of the lower layers. High grade aggregates are used in the upper layers to ensure resistance to wear by studded tires and lower grade aggregates are used in the lower layers. The content of cementitious materials is approximately 590 lb/yd^3 (350 kg/m^3) in the upper layers and 180 to 420 lb/yd^3 (110 to 250 kg/m^3) in the lower layers. Lampinen and Kaitila (20) state that the experimental pavements have exhibited properties comparable with the properties of conventional concrete pavements.

A few RCC pavements have been constructed in Finland. Both one and two-layer construction have been used. The RCC has a mix composition similar to that of conventional concrete, except for a lower water/cement ratio (approximately 0.3) and a larger content of fine aggregates (20).

A research project was started in 1986 as a joint venture between the cement industry and the Roads and Waterways Administration. The purpose of the project was to collect recent information on both cement stabilized pavements and concrete pavements, and to evaluate the applicability of these materials under Finnish conditions. Special concern was given to the following subjects:

- Use of cement-treated pavements for the improvement of bearing capacity
- Abrasion resistance of concrete pavements compared with asphalt pavements under studded tire traffic
- Rehabilitation of concrete pavements

- Behavior of concrete pavements on weak and compressible soils
- Design of concrete pavements to be exposed to frost action (19)

In Finland, there is great interest in research on the wear resistance of concrete pavements. Experiments have been performed in cooperation with Norway. These experiments show that compressive strength is an important parameter for wear resistance. Because of this, attempts have been made to introduce the use of high strength concrete for the construction of highway pavements (20).

5. France

From 1939 to 1960 concrete was infrequently used for highway construction in France, but in the sixties the use of concrete for highway construction increased. The "California method" was used: short concrete slabs with non-dowelled joints (21). The typical design concept was 10 in. (25 cm) thick concrete slabs placed on a 6 in. (15 cm) thick subbase of granular material treated with hydraulic binders.

In the early seventies, the traffic loads increased. Because of this, and in combination with drainage problems, damage, such as pumping of water and fines at joints, faulting and cracking of slabs occurred in many concrete pavements. To prevent such damage the design concepts for concrete pavements were changed. Drains along the side of the road and non-erodable subbases were introduced. Bonnot (21) states that pavements constructed according to the improved techniques have performed well.

Continuously reinforced concrete pavements were introduced in France in 1983 and are now widely used for the construction and strengthening of freeways and other heavily trafficked roads. Continuously reinforced concrete has been used for approximately 340 miles (550 km) of pavement and for the rebuilding of approximately 60 miles (100 km) of crawler lane.

A new type of concrete pavement was introduced in 1989 when the width of an existing freeway was increased using an experimental pavement structure. The structure consists of a thick slab of continuously reinforced lean concrete as a road base (21). The purpose of the introduction of this type of structure is to combine the advantages of existing semi-rigid structures and concrete pavement placement techniques so as to ensure uniform density throughout the full depth of the pavement.

Standard French designs for new construction and pavement strengthening are given in *The Catalogue of Typical New Pavement Structures* (22). The only rigid structures recommended in the 1977 version of this catalogue were designed according to the California technique (22). The catalogue was updated in 1988 to include continuously reinforced concrete pavements and non-dowelled short concrete slabs on a non-erodable

foundation, such as lean concrete, aggregate or sand treated with hydraulic binders.

The following, less conventional pavement structures were also included in the 1988 version of the catalogue:

- Short concrete slabs with dowelled joints or continuously reinforced concrete on a cement processed material with an intermediate bituminous layer
- Thick concrete slabs on a pervious layer (non-processed gravel or geotextile if the base is processed)
- Compacted concrete for medium and low traffic loads (22)

Design Concepts. The typical design concepts in use in France are:

- Short concrete slabs with non-dowelled joints on a non-erodable base
- Continuously reinforced concrete on a non-erodable base (no joints)

Since the mid-seventies subbases for concrete pavements for heavy traffic loads have been constructed almost exclusively with lean concrete (23).

Concrete Mix Proportioning. Air-entraining and water-reducing admixtures are frequently used. Three to six percent of air by volume of concrete and a cement content of 500 to 600 lb/yd^3 (300 to 350 kg/m^3) is recommended. A mean flexural strength of more than 700 psi (5 MPa) is required. No requirements are given with respect to the water/cement ratio.

During the construction of continuously reinforced concrete pavements problems with the creation of construction joints often arise. To overcome these problems, set retarders have occasionally been added to the last pour of the day.

Placement. The usual method of placement in France is slipform paving. Two types of surface texture techniques are applied:

- Incorporation of very hard fine gravel (studs) into the surface mortar
- Exposure of the fine surface gravel (using the Belgian method of exposed aggregates finishing)(24)

Curing. One of two methods of curing are used: application of a curing compound; or covering with polyethylene sheets.

Maintenance. A major item of interest in France has been restoration techniques to ensure several years of satisfactory skid resistance. Two techniques have been applied: surface

dressings; and transverse grooving by sawing (25). In recent years shot blasting also has been used (25,26). In this technique, part of the mortar in the surface of the hardened concrete is removed by bombarding it with fine steel shot, which is recovered on the rebound.

In the early seventies concrete overlays on flexible pavements were introduced. In the period from 1973 to 1976 several concrete overlays on flexible pavements were constructed according to the California technique (short, non-dowelled slabs). The concrete was placed directly on the old pavement or on a levelling course of lean concrete. The placement was carried out by means of a slipform paver and joints were sawn. The structural condition of the pavements is excellent after more than 10 years of use.(27)

Continuously reinforced concrete has been used since 1983 for overlays on existing highways. The method of placement has been rationalized to decrease the period of time in which the road has to be closed. Grob and Aunis (28) present the following types of new machinery and processes used today: computer-monitored concrete production plants, front feeding systems for concrete, reinforcement introduction systems without support, and new flat, coilable reinforcement.

New Developments and Projected Future Trends

Due to the need for more effective and rapid methods for placement of the reinforcing bars in continuously reinforced concrete pavements, experiments have been performed in France using a new flat, notched, high yield strength reinforced steel delivered in rolls. The steel is a weldable carbon steel with an elastic limit greater than 102,000 psi (700 MPa) (29,30).

The earliest experiments with this type of reinforcement took place in 1986. These experiments showed that 0.67% conventional steel was equivalent to 0.3% of flat, notched steel. The steel used had a cross section of 1.6 x 0.08 in. (40 x 2 mm). This flat type of reinforcement (0.3 percent) was successfully used in 1987 for the construction of a 0.3 mile (450 m) experimental section of a freeway. This experimental section performed like the rest of the freeway, which contains conventional continuously reinforced concrete. Since 1987 more pavements have been constructed with this new type of steel: 3 miles (4.8 km) of pavement at an industrial site in 1988 and two 9-mile (14 km) sections of freeway in 1989 (29).

Bonnot (21) expects further developments to occur in the following areas:

- Maximum use of local materials. This may lead to the use of sand aggregate concrete or concrete with marginal quality aggregate

- Thin overlays on rigid pavements using either a dense concrete or a free-draining concrete (hydraulic concrete having a porosity in excess of 20 percent) (31)

- Thick porous structures, that is, a porous concrete base topped with free-draining concrete surfacing (31,32)

According to Goux (33) special attention has been given to an innovative design concept consisting of thick lean concrete slabs on a draining subbase. On an experimental basis 0.3 mile (500 m) of new freeway was constructed in 1987 as thick lean concrete slabs (thickness 15 in. (37 cm)) without a subbase. The slabs were placed in a single layer by means of a slipform paver. This experimental segment is considered as a first step towards thick continuously reinforced lean concrete pavements (33, 34).

A pavement structure which has not traditionally been used in France was placed as an extension of the above experimental section. This structure consists of unreinforced concrete slabs with dowelled joints on a lean concrete subbase (34).

Another interesting design concept consists of a monolithic composite continuously reinforced concrete pavement made up of two courses of concrete of different composition (35).

RCC has been used on lightly trafficked roads. Recommendations for the composition of RCC are given by Charronat et al (33).

In order to facilitate the maintenance of non-dowelled concrete pavements great interest is given to the development of devices for restoration of load transfer at joints. A method for restoration of load transfer at joints by means of a metallic connector has been developed by Laboratoire Central des Ponts et Chaussées and Freyssinet International. (36)

The metallic connector consists of two half-shells of cast iron glued symmetrically to a central elastomeric pad and contains an adjustable steel pin, which slides freely within housings in the shells. The connector makes horizontal displacement possible, but prevents vertical displacement. The connector is placed in the pavement by special equipment consisting of a drilling unit and an insertion unit (36,37).

6. Germany

Significant experience with the design and construction of concrete pavements exists in the former Federal Republic of Germany, where the pavements generally are of high quality.

Approximately 75,348,000 yd^2 (63,000,000 m^2) of concrete pavements were placed before the Second World War. Nearly all freeways constructed before 1960 were made from

concrete, but in the sixties and seventies interest in construction of concrete freeways decreased. Today, great interest is given to concrete pavements, and nearly all freeways constructed in recent years are concrete pavements (2,19).

Large local variations in the use of concrete for pavement construction exist in Germany. Bavaria, for example, has a large percentage of concrete pavements.

The typical design concept for German concrete pavements is short unreinforced concrete slabs with dowelled joints. The official specifications for concrete pavements: *Zusätzliche Technishe Vorschriften und Richtlinien für den Bau von Fahrbahndecken aus Beton"* (ZTV Beton) were published in 1978. Ammendments were made in 1980, 1982 and 1990. Pavements constructed according to these specifications have generally exhibited satisfactory performance to-date (38).

The use of deicing salts and repeated freeze/thaw actions have caused damage on some German concrete pavements. In many countries air-entrainment is traditionally used to prevent these types of damages. Only in the past decade has air-entrainment been used in Germany; before this non-air-entrained pavements were constructed. There is considerable interest in Germany in methods for determining air content and pore size distribution in concrete (18).

Alkali-silica reactivity (ASR) is a serious problem in northern Germany. To avoid damage to new structures, special recommendations are given for the use of aggregates from this area. A brief description of the recommendations is given by Reimer (39).

Design Concepts. The typical design concept applied in Germany for concrete pavements is short unreinforced slabs with a thickness from 6 to 11 in. (16 to 27 cm), depending on the traffic load. For medium traffic the minimum thickness of concrete slabs is 9 in. (22 cm).

The transverse joints in the pavements are dowelled and tie bars ensure load transfer in the longitudinal joints. A 6 to 10 in. (15 to 25 cm) thick hydraulically bound base with no joints is normally used for medium to heavy trafficked concrete roads. The ZTV Beton recommends a 28-day compressive strength of 1,700 psi (12 MPa) for hydraulically bound bases.

Notching of the fresh hydraulically bound road bases is used to obtain an optimal crack pattern of many fine cracks.

The notching process is required in the following cases:

- Hydraulically bound road bases with a thickness greater than or equal to 8 in. (20 cm) (the distance between the transverse notches must be less than 16 ft (5 m))

- Hydraulically bound road bases with a compressive strength that exceeds the upper limit (1,700 psi 12 MPa). The distance between the transverse notches must be less than 16 ft (5 m).

- Hydraulically bound road bases under thin bituminous pavements with a thickness less than 5.5 in. (14 cm). The distance between the transverse notches must be less than 8 ft (2.5 m).

Concrete Mix Proportioning. Cements containing mineral additives other than slags are not recommended for concrete pavement construction in Germany.

Air-entraining, superplasticizing and/or water-reducing admixtures are the admixtures most frequently used (39). An air content between 4 and 7% by volume of the concrete is required, depending on the maximum aggregate size and whether normal water-reducing or superplasticizing admixtures are used (18).

No requirements are given with respect to the water/cement ratio, but a minimum cement content of 500 lb/yd^3 (300 kg/m^3), an average 28-day compressive strength in the range of 5,100 to 5,800 psi (35 to 40 MPa) and a 28-day flexural strength in the range of 650 to 800 psi (4.5 to 5.5 MPa) are required.

Placement. The predominant placement method for concrete pavements is slipform paving. Fixed form paving is seldom used. Finnish floating and burlap or transverse brushing are used to create a suitable surface texture. Dowels are usually vibrated into the fresh concrete.

Curing. Spraying with curing compound immediately after texturing is the usual method of curing.

Maintenance. Various types of overlays are used on old concrete pavements. Some pavements have been repaved with a bituminous layer with a thickness up to 5 in. (12 cm) (40), and some old concrete pavements have been repaired using concrete overlays with a thickness of 7 in. (22 cm). The old concrete is broken before the placement of the new concrete to achieve a base similar to a hydraulically bound base.

Considerations are being given to the possibility of dispensing with joint sealing, due to the continued maintenance needed (40).

New Developments and Projected Future Trends

The influence of temperature and moisture changes on concrete pavements has been a

subject of interest in Germany.

Investigations of stresses due to temperature and moisture changes have resulted in the following recommendations, given by Springenschmid and Fleischer (41):

- Continuous wet-curing of the surface should take place to decrease the temperature of the surface compared to the temperature in the middle of the pavement

- Stresses due to changes of moisture and temperature should be taken into account when designing new concrete pavements

- Long term ponding of water underneath the concrete pavements should be avoided

Full-scale experiments conducted at the Prüfamt für Bau von Landverkehrswegen of the TU München have shown that climatic conditions in the first few days after placement of concrete have a great influence on restraint stresses in early age concrete pavements (42).

Efforts have been made in Germany to reduce drainage problems, especially damage caused by a build up of water between the concrete slab and a compacted subbase. Engelmann et al (40) have suggested treatment of the base with hydraulic binders and complete coverage of the subbase with a geotextile as a suitable drainage system for new concrete pavements.

The requirements for surface texture have traditionally been specified to secure proper skid resistance, resistance to wear and evenness of the pavement surface. Today the acoustic properties of the pavement are also considered to be important factors and attempts have been made to reduce tire noise (43).

Investigations have shown that the surface texture has a considerable influence on the noise level, and that the effect of the composition of the materials is not as significant as expected. A pavement of concrete and a pavement of asphalt with similar surface texture have similar acoustic properties. Huschek (43) anticipates further improvements of the surface texture of concrete roads, both with regard to skid resistance and tire noise in the future.

Approximately 180,000 yd^2 (150,000 m^2) of RCC have been placed since 1986 in Germany, and the placement of another 120,000 yd^2 (100,000 m^2) are planned. RCC has primarily been used for pavements located at military installations of the U.S. Army Corps in Germany. The pavements have been designed and constructed by the U.S. Army Corps of Engineers, European Division (44,45).

Kern (45) expects RCC to be used to a greater extent for road construction in Germany in

the future if problems regarding resistance to frost and deicing salts action can be solved. Experiments have been made with a pavement consisting of a 10 in. (25 cm) thick base course made of high quality RCC and a thin asphalt overlay (38).

7. Sweden

Approximately 718,000 yd^2 (600,000 m^2) of concrete pavements were constructed in Sweden before the Second World War. Since then approximately 1,600,000 yd^2 (1,300,000 m^2) have been placed (19).

During the sixties a number of concrete pavements were constructed in Sweden. Some of these pavements have serious defects, which are mainly due to faulty design and insufficient maintenance (46). The design and construction techniques were then improved and the few pavements constructed during the seventies have a satisfactory record and a very low maintenance cost to date (46).

In the period from 1978 to the mid-eighties no concrete pavements were constructed in Sweden. In 1984 RCC was introduced in Sweden, mainly in industrial areas and bus terminals.

Design Concepts. The typical design concept applied in Sweden for concrete pavements is short unreinforced slabs with a thickness of approximately 8 in. (20 cm). The distance between transverse joints is typically 16 ft (5 m) and joints are sawn. Transverse joints are dowelled, and tie bars secure load transfer in longitudinal joints.

Concrete pavements are normally placed on a 6 in. (15 cm) thick cement stabilized base, but bitumen stabilized bases are also used. The possibility of applying cement grouted macadam for base layers has been investigated and Persson (47) states that cement grouted macadam is nearly as cost-effective as a bitumen stabilized layer of gravel.

Concrete Mix Proportioning. Strong and durable aggregates are used in Sweden to obtain concrete with good resistance against wear from studded tires. An air-content between 5 and 7% by volume of concrete is recommended to obtain good frost resistance. Recommendations are given for a maximum water/cement ratio of 0.45 (preferably 0.40) and a minimum cement content of 550 lb/yd^3 (325 kg/m^3). Air-entraining and water-reducing admixtures are often used. Silica fume and fly ash are not used (48).

Placement. Concrete pavements in Sweden are usually placed by means of a slipform paver, and transverse brushing is the method most frequently applied to obtain a suitable surface texture.

Curing. Application of curing compounds or water curing are used.

Maintenance. Generally, concrete pavements have been repaved with a bituminous overlay. Problems regarding the rehabilitation of concrete pavements have caused some reluctance towards the use of concrete for new pavements (19).

New Developments and Projected Future Trends

A large research project on the use of cement bound materials for road construction was started in 1985 in Sweden. The Swedish National Road Administration, the Swedish Road and Traffic Research Institute and the cement industry participated in the project. The project dealt with cement stabilized bases, cement grouted macadam and concrete pavements (46).

Since the mid-eighties great attention has been given to RCC pavements in Sweden. A considerable amount of effort has been given to investigations of RCC, and both laboratory and full-scale experiments have been made. Since 1984, approximately 777,000 yd^2 (650,000 m^2) of RCC have been placed, primarily as pavements in industrial areas and bus terminals (49).

In Sweden RCC for pavement construction is made from a dry concrete with a compressive strength of approximately 5,800 psi (40 MPa) proportioned for compaction by means of a vibrating roller (50). In contrast to most other countries, RCC is always used as wearing course in Sweden. Because of this, both the material and the craftmanship must comply with strict requirements. The material must be frost resistant and have a high resistance to abrasion from studded tires (49). The craftmanship must be of high quality to provide a satisfactory wearing course with adequate smoothness.

In Sweden, as in other Scandinavian countries such as Norway and Denmark, there is a strong interest in high strength RCC (51). The aim of the use of high strength RCC is to provide a frost resistant wearing cause with a high abrasive resistance. Two test methods have been developed for quality control of RCC pavements. The maximum dry bulk density is determined by means of the Kango (Cube) Method. This method also provides specimens for the determination of various physical properties. The RA Method is used for the determination of the consistency of RCC. The two test methods are described in more detail by Andersson and Carlsson (49).

In the late eighties the Swedish Road Directorate decided to construct two freeway segments from concrete. One is an extension of an existing freeway, the other is a 9 mile (15 km) long section of new freeway. The two segments are constructed as part of the project "Provväge av betong". The purpose of this project is to create the facilities (design, placement and control) needed for the construction of two full-scale concrete roads. The project will be part of a long-term larger research and control/feed back program for improving the basis of the Swedish recommendations for road construction (52).

8. The United Kingdom

The UK is one of the European countries having the strongest tradition for concrete pavements. Concrete pavements have been built mostly on freeways in connection with post-war road constructions. In the seventies approximately 186 miles (300 km) of freeways with concrete pavement were constructed. The major part of these pavements were unreinforced with short slabs and dowelled joints. Several concrete pavements were also constructed in the eighties. One reason for the large percentage of concrete freeway and highway roads is that the English government in the sixties decided that due to national interests both asphalt and concrete should be used for road construction (2). For larger contracts it was required that the contractor submit bids for both concrete and bituminous pavements.

Various types of concrete pavements have been constructed in the UK (53):

- Jointed unreinforced concrete pavements
  - -introduced in 1970
  - -the most frequently constructed type of rigid pavement
  - -generally good performance

- Jointed reinforced concrete pavements
  - -introduced in the 1920's
  - -generally excellent service

- Continuously reinforced concrete pavements (54)
  - -introduced in the mid seventies
  - -generally good performance to-date

- Continuously reinforced concrete road bases (54)
  - -introduced in 1932
  - -minimum maintenance interruption

A great many of the concrete pavements placed on major roads after 1970 have utilized two-layer construction.

An investigation of 36 jointed unreinforced concrete pavements constructed in the period from 1970 to 1979 has indicated that a strong correlation between transverse cracking and the slab length/width and length/thickness ratios exists. It was also observed that the movement of the concrete slab is dependent on the thickness of the subbase and the length of the dowels.

The main conclusion of the investigation was, according to Mildenhall et al (55), that two-layer construction resulted in better surface quality (as a result of an adequate surface

texture), and is less vulnerable to joint spalling than single-layer construction.

Great importance has been attached to the ensurance of a satisfactory surface texture. Considerable improvements of the surface smoothness have been made in the years from 1979 to 1984 in the UK. Two reasons for this are given by Mildenhall et al (55): The use of stronger and more even subbases and two-layer construction of the concrete slabs.

Experience in the UK demonstrates that the establishment of joints, especially the placement of dowels, has great influence on the quality of concrete pavements. Methods for the control of the placing of dowels are therefore of special interest. Investigations of non-destructive methods for the control of the position and alignment of dowels have been conducted at the School of Industrial Science on behalf of the Transport and Road Research Laboratory. In the report prepared by Mildenhall et al (55) a short evaluation is given of the following methods: ultrasonic methods, microwave methods, electrical and magnetic methods (magnetic detectors, cover meters and magnetometers) with respect to their ability to detect the position and alignment of dowels.

Design Concepts. As already mentioned, several design concepts for concrete pavements are applied in the UK. Some of the recommendations for the four pavement types mentioned, given by the Department of Transport (56), are listed below:

- Jointed unreinforced concrete pavements:
  Maximum transverse joint spacing between 13 and 16 ft (4 and 5 m) for construction joints and between 130 and 200 ft (40 and 60 m) for expansion joints, depending on the slab thickness

- Jointed reinforced concrete pavements:
  Maximum transverse joint spacing approximately 100 ft (30 m), and every third transverse joint an expansion joint (winter construction)

- Continuously reinforced concrete pavements:
  0.6% longitudinal reinforcement related to the concrete slab cross sectional area and transverse reinforcement of ½ in. (12 mm) diameter bars at 24 in. (60 cm) spacing

- Continuously reinforced concrete road bases:
  0.4% longitudinal reinforcement related to the concrete slab cross sectional area and transverse reinforcement of ½ in. (12 mm) diameter bars at 24 in. (60 cm) spacing. The roadbase is covered by a 4 in. (10 cm) thick bituminous surfacing

It should be noted that expansion joints are still used in the UK, although only during winter construction. Expansion joints are used only at special locations, such as bridges, in

most other European countries.

Lean concrete has for several years been used for road bases in the UK.

Concrete Mix Proportioning. Three types of cement are used for concrete for pavements in the UK: Ordinary Portland cement (OPC);OPC with ground granulated blast furnace slag (GGBFS < 50%) and OPC with fly ash (15% < fly ash < 35 %). Air-entraining and water-reducing admixtures are used. Requirements are given for a maximum water/cement ratio of 0.5, a minimum cement content of 500 lb/yd^3 (300 kg/m^3) and a minimum 28-days compressive strength of 5,800 psi (40 MPa) (57).

For two-layer construction a very stable bottom layer is needed to provide mechanical support to the inserted dowels. Because of this a concrete mix with very low workability is normally used. The top layer must be easy to finish and texture, and a concrete mix with high workability is consequently used for this layer.

Placement. Fixed form paving is the most frequently applied method of placement, although some companies have applied the slipform paving technique. Since 1970, 70% of the major roads have been constructed by fixed form paving, and two-layer construction has been used in a great majority of cases (55). A particular reason for the use of fixed form paving in contrast to slipform paving is that fixed form paving is believed to give the best surface regularity (55).

The usual method for creation of an adequate surface texture is transverse brushing with a wire brush.

Curing. Curing is usually performed by spraying a curing compound onto the surface.

Maintenance. No particular interest has been given to the maintenance of concrete pavements, since many of the old concrete pavements have performed well and the percentage of concrete pavements is still relatively low (considering the entire road network). Mildenhall et al (55) estimate that this tendency is now changing as the number of concrete pavements and the need for maintenance are increasing.

In the UK a distinction is made between two maintenance strategies: a reactive strategy and a proactive strategy. The reactive strategy involves acting upon defects as they appear. This strategy has worked well in the past on concrete roads which have been competently constructed. The proactive strategy involves inspection and reactions carried out on a pre-defined schedule. This approach represents the present philosophy of the Department of Transportation (55).

Methods for the evaluation of pavement condition are being developed and tested in the UK. Two items of major interest are the High Speed Road Monitor and the Falling Weight Deflectometer. The High Speed Road Monitor (recently developed at the Transportation

Research Laboratory) is developed for measuring the surface characteristics of roads at normal traffic speeds (using laser techniques). The efficiency of the Falling Weight Deflectometer for evaluation of pavement condition, remaining service life and strengthening requirements of pavements is tested (55). The degree of load transfer between slabs is a major item of interest when evaluating concrete slab performance. This may be assessed by means of the Falling Weight Deflectometer (55).

New Developments and Projected Future Trends

TH Technology and the Transportation Research Laboratory in the UK participate in the EEC-funded project ECOPAVE (58), described in a previous section.

In 1989 delegates from the Department of Transportation, the Transportation Research Laboratory and the British Cement Association visited Ames, Iowa, U.S.A., to study the applications of fast track concrete pavements. Following this visit a research project on fast track concrete pavements was started. This project includes a literature study, laboratory experiments and full-scale trials (59). The aim of the project is to confirm the U.S. experience when using British materials under British conditions. The first phase of these experiments has been performed, and a full-scale fast track concrete trial pavement was placed in the summer of 1990 (60). The experimental segment is part of a temporary trunk road. The completed road was opened to traffic on the third day after placement.

Fiber reinforced concrete is another subject of interest in the UK. A test program is currently under way at the School of Civil Engineering in the UK. Concrete slabs made with no reinforcement, steel fabric reinforcement, steel fiber reinforcement and polypropylene fiber reinforcement under investigation. The purpose of the investigation is to rationalize the thickness design principle applied to plain, steel fabric reinforced or fiber reinforced concrete slabs (61).

Continuously reinforced concrete pavements have only been used in the UK since the mid-seventies. No corrosion problems have occurred yet, but as this type of damage may arise in the future, trials have been made with epoxy-coated reinforcement (55).

9. Summary of Current and Future Trends in European Highway Concrete Practice

Concrete pavements have been used in many European countries since the 1920s. The developing and construction of concrete pavements vary among countries. This is a result of the differences in design methods used and experiences obtained within the countries regarding traffic loads, materials performance and climatic conditions.

In most European countries there is a strong tendency to increase the structural capacities at the design stage for concrete pavements with medium to high traffic loads (62).

Special attention has been given to the following methods of increasing the structural capacity: improvement of the mechanical characteristics of the subgrade (e.g. resistance to erosion); increase in slab thickness; shortening of slabs; and improvement of the drainage systems (63).

The use of industrial byproducts, such as fly ash and ground granulated blast furnace slag, is generally considered to be of great interest in the construction of concrete pavements in Europe. In recent years several investigations on the influence of these products on the quality and durability of concrete pavements have been performed. The general tendency is that fly ash is used increasingly for road bases, but only in a few countries is fly ash used for concrete pavements. The use of slag for road bases and pavements varies considerably from country to country. For example, up to 60% slag of the binder has been used in Finland in contrast to other European countries.

The possibilities of recycling concrete and asphalt materials are being investigated in several European countries, especially Belgium, France and Germany. So far recycled crushed concrete has mainly been used for subbases.

Considering the specification given in the Synoptic Table on Standards and Practices for Concrete Roads in Europe prepared by Jofré and Kraemer (1) the following general composition for concrete for pavements can be given: maximum water/cement ratio from 0.4 to 0.5, minimum cement content from 500 to 630 lb/yd^3 (300 to 375 kg/m^3); and air content between two and seven percent by volume of the concrete.

In recent years great effort has been made to optimize the surface texture of the pavements. Originally this was done to obtain optimum skid and abrasion resistance; later also to decrease tire noise. In most European countries, brushing (transverse and longitudinal) has been the standard method for the establishment of an adequate surface texture. In recent years the exposed aggregates finishing technique (see section 3.1) has been increasingly used, because this method yields both satisfactory skid resistance and a satisfactory noise level.

In most European countries the design life of heavily loaded concrete roads has been increased. Currently, the typical design life for concrete roads lies between 30 and 40 years.

A major item of interest in many European countries is the possibility of minimizing the considerable problem of crack propagation, especially the risk of cracks appearing in concrete wearing courses due to reflection of cracks from hydraulically bound subbases, particularly when lean concrete is used for the subbase (63).

Placement of concrete pavements with slipform pavers has in recent years become more and more common in Europe. Slipform paving is today the typical method of placement in most European countries. One exception is the UK, where fixed form paving still predominates.

Interest in the use of roller compacted concrete (RCC) varies significantly throughout Europe. In some countries RCC is not used at all (e.g. Belgium), whereas RCC is used for pavement construction to some extent in Germany and France.

Difficulties occur in obtaining a satisfactory evenness and surface uniformity of RCC and problems also occur with control of cracks in RCC. It is anticipated that these problems will be overcome and RCC will act as an inexpensive and durable alternative to other types of pavements. Kraemer et al (63) expect that RCC will be well suited for light and moderate traffic loads.

10. References

1. C. Jofré and C. Kraemer. Synoptic Table on Standards and Practices for Concrete Roads in Europe. 6th International Symposium on Concrete Roads, Madrid, 8-10 October, 1990

2. C.F. Justesen. Betonbelaegninger i andre lande. Dansk Vejtidsskrift nr. 3, 1990

3. F. Fuchs. Concrete Roads: A National Viewpoint. 5th International Symposium on Concrete Roads, Ankara, 25-26 November, 1986

4. P. Petit and P. Van Audenhove. Resistance of Concrete Safety Barriers and Concrete Roads Against the Scaling Action of Deicing Salts. 6th International Symposium on Concrete Roads, Madrid, 8-10 October, 1990

5. K. Veverka, J. Vertraeten and F. Fuchs. The Design of Concrete Pavements and Overlays. 6th International Symposium on Concrete Roads, Madrid, 8-10 October, 1990

6. L. Lejeune and J. Petit. Continuously Reinforced Concrete Overlay on Highway E40 near Liege. 6th International Symposium on Concrete Roads, Madrid, 8-10 October, 1990

7. K. Verhoeven. Thin Continuously Reinforced Concrete and Steel Fiber Reinforced Concrete Overlays, performance after three to eight years. 6th International Symposium on Concrete Roads, Madrid, 8-10 October, 1990

8. G. Lefebvre. Specific Deterioration of Construction Joints in Continuously Reinforced Concrete Pavements. 6th International Symposium on Concrete Roads, Madrid, 8-10 October, 1990

9. E. Bogaerts and A. Verhasselt. Some Theoretical and Practical Aspects of the use of Fly Ash in Lean-concrete. 6th International Symposium on Concrete Roads, Madrid, 8-10 October, 1990

10. Y. Dechamps et al. Construction and Maintenance of Rigid Pavements (Belgium). Question 3, XVIIIth World Road Congress, Brussels, 1987

11. K. Puckman. Betonveje i Danmark 1923-1984. Statens Vejlaboratorium, Laboratorierapport nr. 64, 1987

12. K. Puckman. Ny type koerebelaegning syd for Faroebroerne. Dansk Vejtidsskrift nr. 5, 1985

13. D.H. Bager. High Strength, Aggregate Rich Concrete for Pavements. 6th International Symposium on Concrete Roads, Madrid, 8-10 October, 1990

14. C.F. Justesen and J. Sannes. Veje til fremtiden. Nordisk Vejteknisk Forbund's 15. Kongres, Koebenhavn, 13-16 Juni, 1988

15. Stabilbeton til belaegninger. Beton-Teknik, Fra CtO's arbejdsmark 10/33, 1990

16. Ecopave. Dansk Vejtidsskrift nr. 3, 1990

17. Densit Kompaktbeton et staerkt alternativ til traditionelle vejbelaegninger. Dansk Vejtidsskrift nr. 3, 1990

18. E. Siebel. Dependable Production of Air-entrained Concrete with High Resistance to Freezing and Thawing in the Presence of Deicing Salt for Road and Bridge Construction. 6th International Symposium on Concrete Roads, Madrid, 8-10 October, 1990

19. V. Suonio. Cement-treated and Concrete Pavements: Their Applicability in Finland and Elsewhere. The Finnish Association of Building Materials Industry, 1989

20. A. Lampinen and H. Kaitila. Construction and Maintenance of Rigid Pavements (Finland). Question 3, XVIIIth World Road Congress, Brussels, 1987

21. J. Bonnot. Presentation. Bulletin de Liaison des Laboratoires des Ponts et Chaussees, Concrete Roads, Special XVI, September 1990

22. A. De Boissudy, M.T. Goux and P. Genre. New Concrete Pavement Structures in the Revision of the French Catalogue of New Pavements and in The Technical Guide of Overlays. 6th International Symposium on Concrete Roads, Madrid, 8-10 October, 1990

23. Y. Charonnat et al. Construction and Maintenance of Rigid Pavements (France). Question 3, XVIIIth World Road Congress, Brussels, 1987

24. Y. Charonnat, J.P. Lefebvre and A. Sainton. Optimization of Non-skid Characteristics in Construction of Concrete Pavements. Bulletin de Liaison des Laboratoires des Ponts et Chaussees, Concrete Roads, Special XVI, September 1990

25. J.P. Christory et al. Restoration of Surface Properties of Concrete Pavements. Bulletin de Liaison des Laboratoires des Ponts et Chaussees, Concrete Roads, Special XVI, September 1990

26. Y. Delmon and G. Lemonnier. Road Surface Roughness by Shot Blasting. 6th International Symposium on Concrete Roads, Madrid, 8-10 October, 1990

27. Y. Charonnat et al. Cement Concrete Overlays on Flexible Pavements in France. Bulletin de Liaison des Laboratoires des Ponts et Chaussees, Concrete Roads, Special XVI, September 1990

28. D. Gorb and J. Aunis. Continously Reinforced Concrete Overlay Worksites, Planning on Motorways in Service, High Output Production Equipment. 6th International Symposium on Concrete Roads, Madrid, 8-10 October, 1990

29. G. Guerin et al. Concrete Continously Reinforced with Flat, Slotted, Galvanised Steel Strips, Experience of "Flexarm" Reinforcements, French Road Network 1896-89. 6th International Symposium on Concrete Roads, Madrid, 8-10 October, 1990

30. J.L. Nissoux. Continuously Reinforced Concrete with Notched and Galvanized Steel Strips. Roads, No. 269 III, 1989

31. J.L. Nissoux and F. Verhee. Cement Concrete Pavements, Techniques for New Highways and Maintenance in the year 2000. Bulletin de Liaison des Laboratoires des Ponts et Chaussees, Concrete Roads, Special XVI, September 1990

32. J.P. Christory, G. Pipien and A. Sainton. Porous Urban Pavements in Cement Concrete. 6th International Symposium on Concrete Roads, Madrid, 8-10 October, 1990

33. M.T. Goux. Concrete Structures made of One Piece Lean Concrete Slabs, French Experiments and Pavement Design, Future Developments. 6th International Symposium on Concrete Roads, Madrid, 8-10 October, 1990

34. P.Y. Bellon et al. RN57: A New Concrete Road from Rioz to Voray-sur-l'Ognon, The revival of the dowel, An experimental lean-concrete pavement. Bulletin de Liaison des Laboratoires des Ponts et Chaussees, Concrete Roads, Special XVI, September 1990

35. Y. Charonnat, J.P. Augoyard and L. Ponsart. A New Process for the Laying of Monolithic Composite CRC Pavements. Bulletin de Liaison des Laboratoires des Ponts et Chaussees, Concrete Roads, Special XVI, September 1990

36. J.P. Christory et al. Load Transfer Restoration at Joints. From the Laboratory to the Jobsite. Bulletin de Liaison des Laboratoires des Ponts et Chaussees, Concrete Roads, Special XVI, September 1990

37. P. Orsat. Load Transfer Restoration LCPC/Freyssinet Connector. 6th International Symposium on Concrete Roads, Madrid, 8-10 October, 1990

38. M. Schmidt. Experience and New Developments in Concrete Road Construction in the FRG. International Conference on Concrete Pavement Design and Rehabilitation, Purdue University, 1989

39. B. Reimer. Quality Assurance of Construction Materials for Concrete Roads in Germany. 6th International Symposium on Concrete Roads, Madrid, 8-10 October, 1990

40. K.H. Engelmann et al, Construction and Maintenance of Rigid Pavements (Federal Republic of Germany), Question 3, XVIIIth World Road Congress, Brussels, 1987

41. R. Springenschmid and W. Fleischer. Effects of Temperature and Moisture on Concrete Pavements. 6th International Symposium on Concrete Roads, Madrid, 8-10 October, 1990

42. A. Zachlehner. Restraint Stresses in Young Concrete Pavements. 6th International Symposium on Concrete Roads, Madrid, 8-10 October, 1990

43. S. Huschek. Optimization of Surface Characteristics of Cement Concrete Roads. 6th International Symposium on Concrete Roads, Madrid, 8-10 October, 1990

44. M.M. Bourgeois and O. Hersel. Roller Compacted Concrete for Pavements in Military Areas within the FRG. 6th International Symposium on Concrete Roads, Madrid, 8-10 October, 1990

45. E. Kern. Experience with Roller Compacted Concrete for Traffic Areas in the FRG. 6th International Symposium on Concrete Roads, Madrid, 8-10 October, 1990

46. R. Andersson and P. Persson. Construction and Maintenance of Rigid Pavements (Sweden). Question 3, XVIIIth World Road Congress, Brussels, 1987

47. P. Persson. Cementgrouted Macadam. 6th International Symposium on Concrete Roads, Madrid, 8-10 October, 1990

48. Forslag till Svensk Betong Belaegningsnorm. Nordisk Vaegtekniska Forbundet, rapport 2, 1984

49. R. Andersson and U. Carlsson. Interaction between Mix Design, Construction and Properties for RCCP. 6th International Symposium on Concrete Roads, Madrid, 8-10 October, 1990

50. R. Andersson. Swedish Experiences with RCC, Concrete International Vol. 9 No. 2, February, 1987

51. G. Horrigmoe and D.B. Rindal. High Strength Roller Compacted Concrete. 6th International Symposium on Concrete Roads, Madrid, 8-10 October, 1990

52. C.F. Justesen. Nye betonveje i Sverige. Dansk Beton nr. 3, August 1989

53. J. Mercer. UK Practice for the Design and Construction of Concrete Roads. 5th International Symposium on Concrete Roads, Aachen, 2-4 June, 1986

54. P.J. Collison and P.M. Hollands. A Contractor's View of Concrete Pavements in the Expanding UK Market Place. 6th International Symposium on Concrete Roads, Madrid, 8-10 October, 1990

55. H.S. Mildenhall et al. Construction and Maintenance of Rigid Pavements (UK). Question 3, XVIIIth World Road Congress, Brussels, 1987

56. Department of Transport. Structural Design of New Road Pavements. Department of Transport, Highways and Traffic Departmental Standard HD 14/87, 1987

57. L. Carrol. Concrete Paving in the UK (One Conctractor's Experience and Approach Since 1983). 6th International Symposium on Concrete Roads, Madrid, 8-10 October, 1990

58. C. Webb. *Secrecy Surrounds A30 Trial of High Strength Concrete Road Base,* Highways, September, 1990

59. K. Veverka. The Belgian Road Research Centers Design Procedure for Concrete Pavements. International Workshop on the Theoretical Design of Concrete Pavements, Epen, 1986

60. B. Walker. *Fast Curing Concrete Overlays to Challenge Blacktop Supremacy.* Highways, October 1990

61. D. Beckett. A Programme of Comparative Test on Plain, Fabric Reinforced and Fiber Reinforced Concrete Ground Slabs. 6th International Symposium on Concrete Roads, Madrid, 8-10 October, 1990

62. F. Verhee et al. Construction of Rigid Pavements. General report 3, XVIIIth World Road Congress, Brussels, 1987

63. M.C. Kramer et al. Concrete Roads. Technical Committee Report nr. 7, XVIIIth World Road Congress, Brussels, 1987

Concrete and Structures Advisory Committee

Chairman
James J. Murphy
New York Department of Transportation (retired)

Vice Chairman
Howard H. Newlon, Jr.
Virginia Transportation Research Council (retired)

Members

Charles J. Arnold
Michigan Department of Transportation

Donald E. Beuerlein
Koss Construction Co.

Bernard C. Brown
Iowa Department of Transportation

Richard D. Gaynor
National Aggregates Association/National Ready Mixed Concrete Association

Robert J. Girard
Missouri Highway and Transportation Department

David L. Gress
University of New Hampshire

Gary Lee Hoffman
Pennsylvania Department of Transportation

Brian B. Hope
Queens University

Carl E. Locke, Jr.
University of Kansas

Clellon L. Loveall
Tennessee Department of Transportation

David G. Manning
Ontario Ministry of Transportation

Robert G. Packard
Portland Cement Association

James E. Roberts
California Department of Transportation

John M. Scanlon, Jr.
Wiss Janney Elstner Associates

Charles F. Scholer
Purdue University

Lawrence L. Smith
Florida Department of Transportation

John R. Strada
Washington Department of Transportation (retired)

Liaisons

Theodore R. Ferragut
Federal Highway Administration

Crawford F. Jencks
Transportation Research Board

Bryant Mather
USAE Waterways Experiment Station

Thomas J. Pasko, Jr.
Federal Highway Administration

John L. Rice
Federal Aviation Administration

Suneel Vanikar
Federal Highway Administration

11/19/92

Expert Task Group

Bernard C. Brown
Iowa Department of Transportation

Stephen Forster
Federal Highway Administration

David L. Gress
University of New Hampshire

Crawford Jencks
Transportation Research Board

Celik Ozyildirim
Virginia Transportation Research Council

Terry Mitchell
Federal Highway Administration

Robert J. Perry
New York State Department of Transportation

Charles F. Scholer
Purdue University

Lawrence L. Smith
Florida Department of Transportation