Strategic Growth

- ***RTM for Production Operations – Stone Energy Perspective***

STONE ENERGY

RTM Monitoring – Production Operations

- Stone Energy Perspective:
  - Command and Control of offshore production operations should always be handled by our onsite operating personnel
  - Surveillance can and is done from the office
  - Surveillance is focused on well information and rotating equipment information
  - Engineers use the surveillance capability and the trending feature (graphs) to analyze information

RTM Monitoring – Production Operations

- Stone Energy Perspective continued:
  - Stone Energy has (6) Fields in the GOM and all six have SCADA (RTM) capability that is used for surveillance
  - Only (1) of the (6) Fields has electronic control capability
  - Stone Energy does not have specific criteria that we use to determine when we install RTM capability but in general feel that any field with a +3 year remaining life will justify installing RTM for surveillance (low cost); we have never upgraded a pneumatic system to an electronic system for control (very cost prohibitive)

RTM Monitoring – Production Operations

- RTM to enhance BSEE responsibilities:
  - Stone Energy could envision performing parts of the annual BSEE inspections via VC / Control Room visits vs actual onsite visits on specific platforms (but, does not allow BSEE to assess physical condition of the facility)
  - Stone Energy could see VC / Control Room testing of the component testing of the Safety Devices (could reduce the onsite time/personnel required by BSEE but should not eliminate onsite time required by BSEE)
  - Stone Energy would recommend **no mandatory requirement to upgrade current pneumatic control systems** to electronic control systems

RTM Monitoring – Production Operations

- Stone Energy RTM Capabilities (Production Operations):

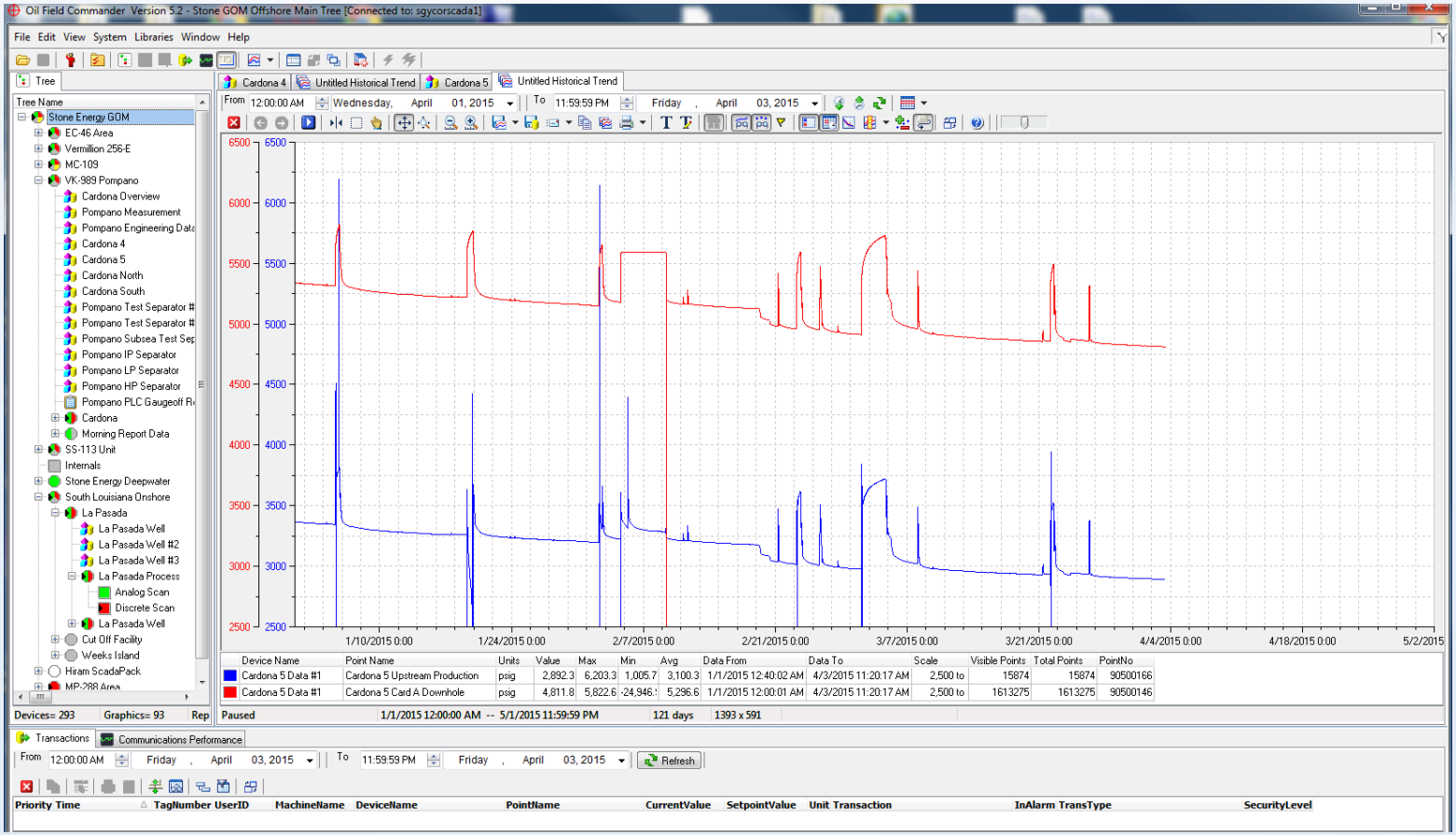

RTM Monitoring – Production Operations

- Stone Energy RTM Capabilities (Production Operations):

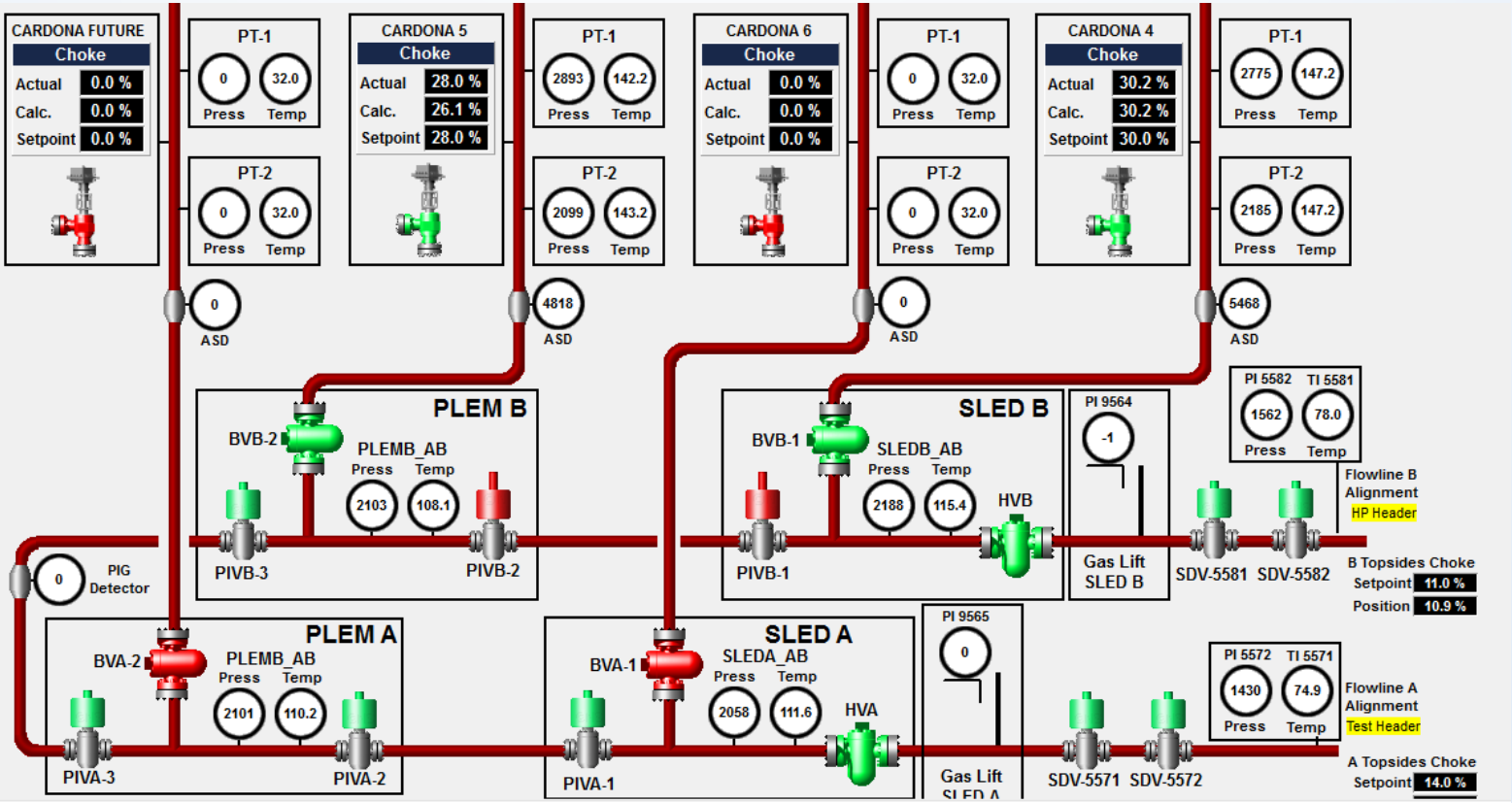

RTM Monitoring – Production Operations

- Stone Energy RTM Capabilities (Production Operations):

SS-93 #61
Go To Well | Gas Inj Rate 0.0 (MCFD)
Tubing 87 (PSIG) | Casing 1,201 (PSIG) | FA2 Flowline 26 (PSIG)

SS-93 M2A
Go To Well | Gas Inj Rate 0.0 (MCFD)
Tubing 28 (PSIG) | Casing 1,196 (PSIG) | FA2 Flowline 26 (PSIG)

SS-93E Well E1
Go To Well | Gas Inj Rate 1,153.4 (MCFD)
Tubing 244 (PSIG) | Casing 889 (PSIG) | FA2 Flowline 206 (PSIG)

SS-93 E1 Chemical Tank Measurements

66.06	Yesterday's value at 8:00 am
43.20	Today's value at 8:00 am
22.86	Inches pumped in 24 hours
196.56	Gallons pumped in 24 hours

SS-93 #43
Go To Well | Gas Inj Rate 4.9 (MCFD)
Tubing -2 (PSIG) | Casing -2 (PSIG) | FA2 Flowline 0 (PSIG)

SS-92 #8
Instrument Gas 116 (PSIG) | Go To Well
Tubing 1,394 (PSIG) | Casing -10 (PSIG) | FA2 Flowline 218 (PSIG)

SS-93E Well E2
Instrument Gas 180 | Go To Well | Gas Inj Rate 1,239.2 (MCFD)
Tubing 209 (PSIG) | Casing 932 (PSIG) | FA2 Flowline 208 (PSIG)

SS-93 #66
Instrument Gas 58 (PSIG) | Go To Well | Gas Inj Rate 0.0 (MCFD)
Tubing 2,361 (PSIG) | Casing 21 (PSIG) | FA2 Flowline 1675 (PSIG)

SS-93-O1
Instrument Gas 107 (PSIG) | Go To Well
Tubing 943 (PSIG) | Casing 127 (PSIG) | FA2 Flowline 187 (PSIG)

SS-93 #16
Chem Tk Level 43.01 (IN) | Instrument Gas 182 (PSIG) | Go To Well | Gas Inj Rate 0.0 (MCFD)

SS-93 #16 Departing Pipelines

4" Seg. #9735 KAH-1060 Departing P/L	3" Seg. #0995 KAH-1050 Departing P/L	6" Seg. #1005 KAH-1040 Departing P/L
181 (PSIG)	1,640 (PSIG)	199 (PSIG)
(Old Tubing)	(Old Casing)	(Old FA2 Flowline)

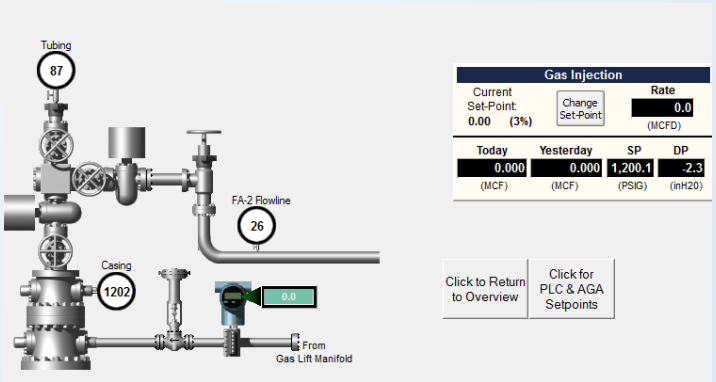

RTM Monitoring – Production Operations
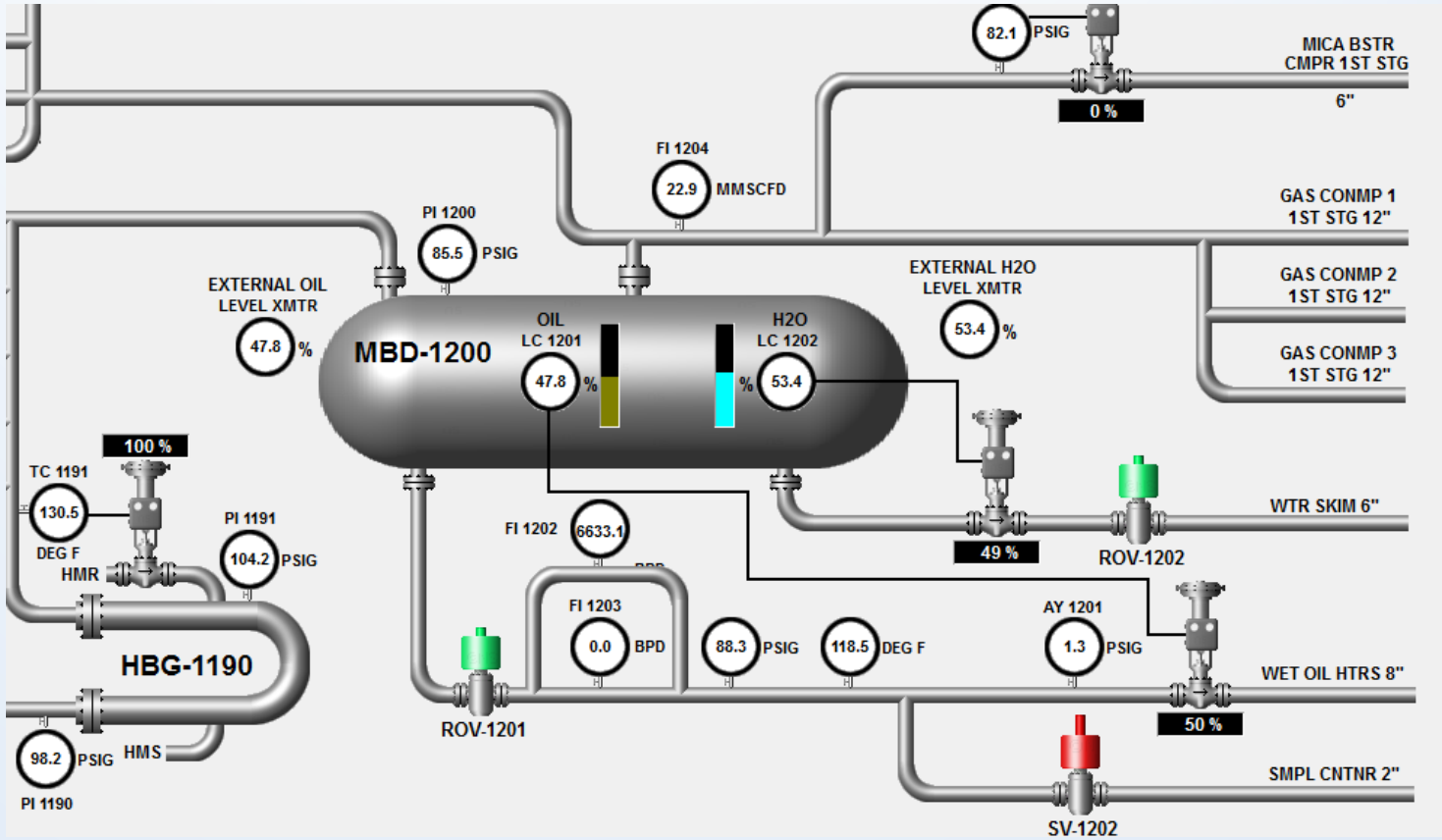
- Stone Energy RTM Capabilities (Production Operations):