Static Carrying Capacity of Steel Plate Girders

B. T. YEN AND KONRAD BASLER,
Research Associates, Fritz Engineering Laboratory, Lehigh University

For the past few years an extensive research project has been conducted at Lehigh University to investigate the carrying capacity of thin-web plate girders. The work consisted of analytical studies and a series of tests on full-size, welded steel girders. Design recommendations prepared from the results have been incorporated in the new AISC design specifications. Some of the findings of this research are summarized in this paper and the more important design recommendations are presented briefly. The subject is treated from a physical rather than a mathematical viewpoint.

• PLATE GIRDERS often can be loaded beyond the web buckling load predicted by the classical plate buckling theory. This is due to the fact that the web plate is framed by flanges and transverse stiffeners that allow for a redistribution of stress.

Because a plate girder is usually subjected to bending, shear, or a combination of the two, the stress redistribution will be summarized for these three cases.

BENDING

Actual measurements show that the web of a steel plate girder is seldom a perfect plane and that sudden buckling of the web under bending is usually nonexistent (*1*). Measured cross-sectional configurations of a girder due to increasing moments are shown at the left in Figure 1. (The applied moments are expressed in terms of the yield moment which is the moment causing initial yielding.) The straightening of the tension portion and the gradual lateral deflection of the compression portion of the web is evident.

Examining the corresponding stress diagrams to the right (Fig. 1), two phenomena are observed: (a) the laterally deflected portion of the web does not carry the stresses computed using beam theory (thin, straight lines); and (b) the stresses in the compression flange are greater than the values derived from beam theory. The combination of these two effects indicates a redistribution of stress from the web to the flange. Such a redistribution can be relied on as long as the capacity of the flange is not exhausted; that is, as long as the flange does not fail.

Because the web carries a lower bending stress than the flange and because it is much closer to the neutral axis, the web's contribution to the resisting moment is only a small part of the total. A small area of the compression flange will supply a resisting moment equal to that of the compression portion of the web. This condition leads to the concept of

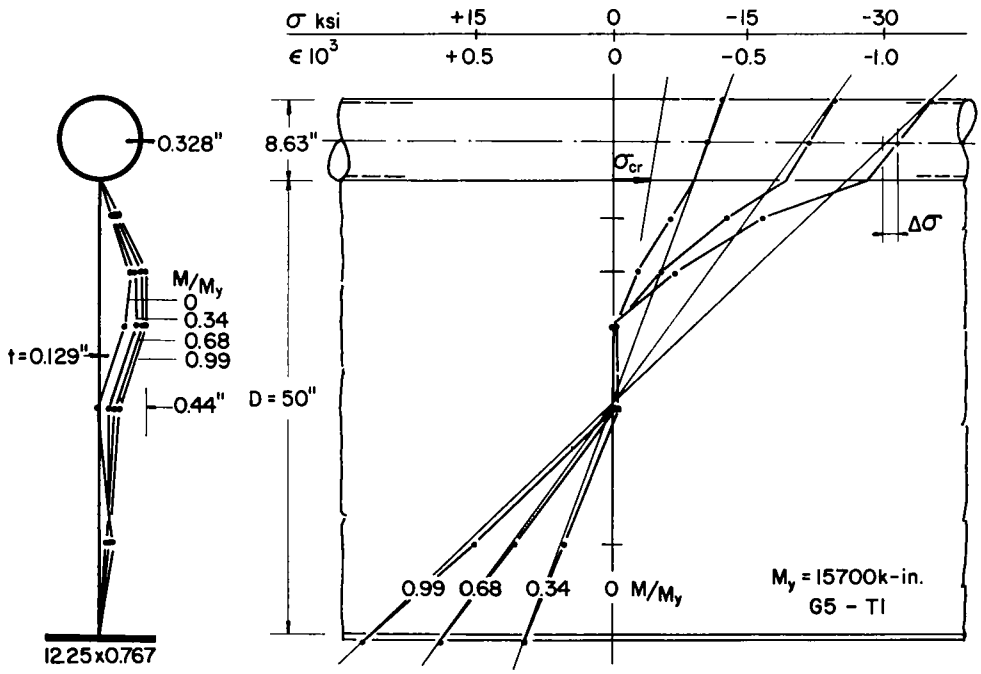

Figure 1. Measured bending stresses and web deflections.

effective width. A portion of the web adjacent to the compression flange is considered as a part of the flange to resist moment.

A compression flange may fail by buckling as well as by yielding. Figure 2 shows the three ways it can buckle; namely, vertically, torsionally, or laterally.

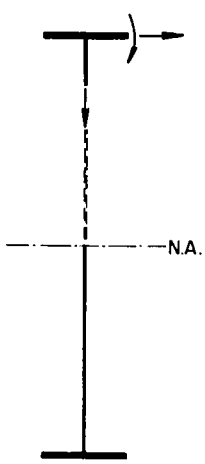

Figure 2. Buckling modes of compression flange.

Vertical Buckling

When a girder is subjected to moment, the compression flange bends toward the web. Having little rigidity in this direction, it depends on the web for support. If the supporting web buckles, the flange will also buckle (Fig. 3). Assuming that the web is strong enough to sustain the pressure from the compression flange so that the latter can be strained to yielding, no vertical buckling will occur before flange yielding. Consideration of equilibrium between the flange and the web under such a condition gives a limitation to the slenderness of the web (*2*).

$$\frac{D}{t} < \frac{0.48E}{\sqrt{\sigma_y\,(\sigma_y + \sigma_r)}} \qquad (1)$$

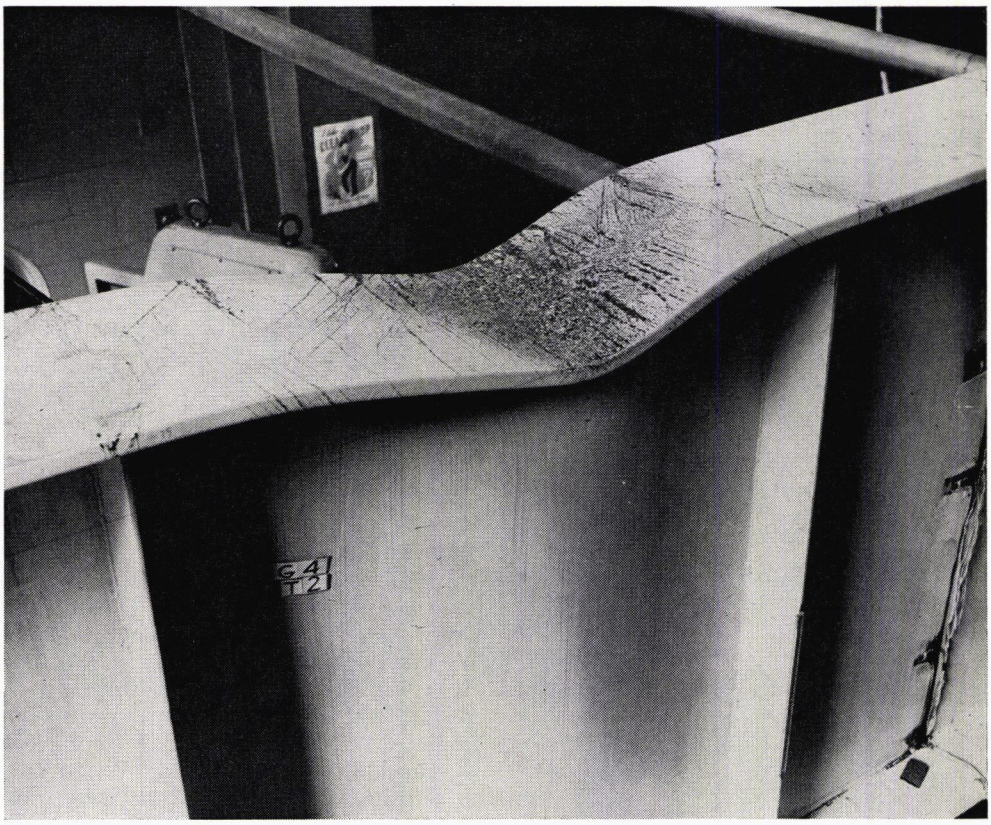

Figure 3. Buckling of flange.

in which D and t are the depth and thickness of the web, E and σ_y are the modulus of elasticity and yield point of the girder material, and σ_r is the residual stress on the flange. For a welded steel girder with $\sigma_y =$ 33,000 psi and $\sigma_r = 16{,}500$ psi, this limiting web slenderness ratio is $D/t = 340$.

Torsional Buckling

Twisting of the compression flange can only occur between transverse stiffeners and is, in effect, a local buckling of the flange. A frequently used method of preventing this type of failure is to specify a maximum value of the width-to-thickness ratio of the projecting portion of the flange.

Lateral Buckling

For shallow, stocky-rolled shapes, lateral buckling of a flange causes the entire section to tilt because the section is rigid enough to preserve its shape. The LD/bt formula applies for this case. However, preservation of cross-sectional shape cannot be assured for plate girders where the web is slender (Fig. 4). This implies that the buckling resistance is furnished only by the compression flange. The situation is therefore nothing more than a column problem. Using the formula suggested by the Column

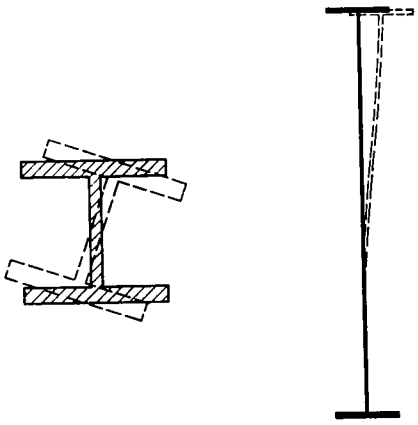

Figure 4. Lateral buckling of plate girder flange.

Research Council (*3*), the recommended formula for allowable stress can be obtained. For example, the allowable bending stress for steel with a yield point of 33,000 psi is

$$\sigma_a = 18{,}000 - \frac{0.52}{C_1}\left(\frac{L}{r}\right)^2 \qquad (2)$$

in which C_1 is a factor dependent on the moment gradient on the member (C_1 can be negative (*3*)), L is the unsupported length of the compression flange and r is the radius of gyration of the effective compression flange,

$$r = \sqrt{\frac{I_f}{A_f + A_w/6}}$$

If rectangular flange plates are used, Eq. 2 can be expressed as

$$\sigma_a = 18{,}000 - \frac{1.04}{C_1}\left(6 + \frac{A_w}{A_f}\right)\left(\frac{L}{b}\right)^2 \qquad (3)$$

which is in the form of the existing AASHO stress formula.

Flange Stress Reduction

It was pointed out that stress redistribution due to out-of-straightness of the web raises the flange stress. As a result, an adjusted allowable bending stress, slightly lower than otherwise permitted, must be used. Because thicker webs deflect less than thinner ones, it is apparent that the reduction is directly affected by the web slenderness ratio, D/t, and the area ratio, A_w/A_f, as is shown in Eq. 4.

$$\sigma'_a = \sigma_a\left[1 - 0.0005\frac{A_w}{A_f}\left(\frac{D}{t} - 170\sqrt{\frac{18{,}000}{\sigma_a}}\right)\right] \qquad (4)$$

In which, σ'_a is the adjusted allowable bending stress and σ_a is obtained from Eq. 2 or is equal to 18,000 psi whichever is smaller (*2*).

When the web is thick enough to resist lateral buckling, no reduction is necessary. The limit is expressed by the last term of Eq. 4. When D/t is smaller than the value given by this term, no reduction is required. For the cases where σ_a is 18,000 psi or 27,000 psi, web slenderness ratios of 170 or 140 are obtained which are the existing upper limits for transversely stiffened plate girders built of structural carbon steel or high-strength, low-allow structural steel, respectively. This is to say that using the new design recommendations, girders with D/t greater than the existing limits are permissible providing the allowable bending stress is reduced according to Eq. 4.

SHEAR

It is physically impossible to have pure shear loading on a plate girder. The effect of combined shear and bending will be discussed later and the effect of shear alone will be summarized now.

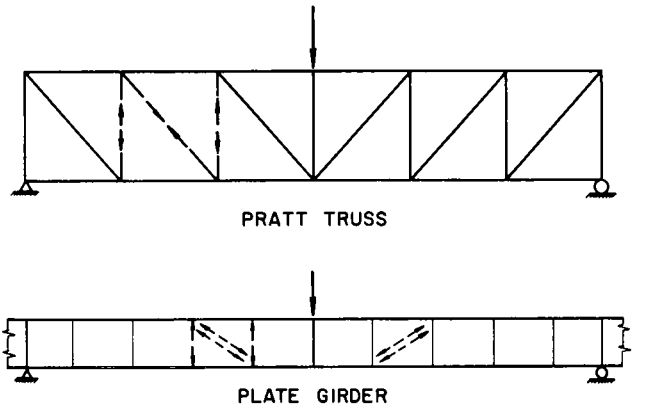

Figure 5. Truss analogy of plate girder.

Tension Field Action

The redistribution of stresses under shear is based on the concept of tension field action that has been used by aeronautical engineers for many years. To explain this action in terms familiar to civil engineers, a comparison between a plate girder and a Pratt truss is helpful.

Figure 5 shows a Pratt truss under load. All the diagonals are in tension with the vertical force components equal to the compressive forces in the neighboring struts. If the flanges and the struts are strong enough, the tension diagonals will fail by yielding. When the plate girder shown below the truss is examined with this in mind, the web of the girder appears to form actual tension fields analogous to the tension diagonals and can be stressed to yielding. The effect of web buckling on these imaginary tension fields is not immediately clear.

Again, test observations will assist in understanding the situation. That a perfectly plane web seldom exists and that a web only deflects gradually has been demonstrated by actual measurements on steel girders (*1*). The wavy pattern of web deflection in the compressive direction leaves fairly straight sections in the tensile direction (Fig. 6) and thus the buckling has little effect on the tension capacity. Hypothetically, a girder resists stress by "beam action" up to the point at which web buckling occurs. The wavy pattern of the web will occur at this point. Therefore, it is assumed that the shear strength (V_u) of a girder panel consists of two parts: the "beam action" shear strength (V_{cr}) and the "tension field action" shear strength (V_{ten}) (*4*).

$$V_u = V_{cr} + V_{\text{ten}}$$

Recalling that the unit stress of the tension field acts with the web buckling stress to cause yielding, the magnitude of the tension field shear force can be evaluated mathematically. Incorporating a factor of safety (1.83) with the total shear strength, the allowable shear stress in a girder web can be expressed as

$$\tau_a = \frac{\sigma_y}{3.18}\left[\frac{\tau_{cr}}{\tau_y} + \frac{1 - \dfrac{\tau_{cr}}{\tau_y}}{1.15\sqrt{1 + (d/D)^2}}\right] \tag{5}$$

where σ_y and τ_y are the yield points of the girder material due to tension and

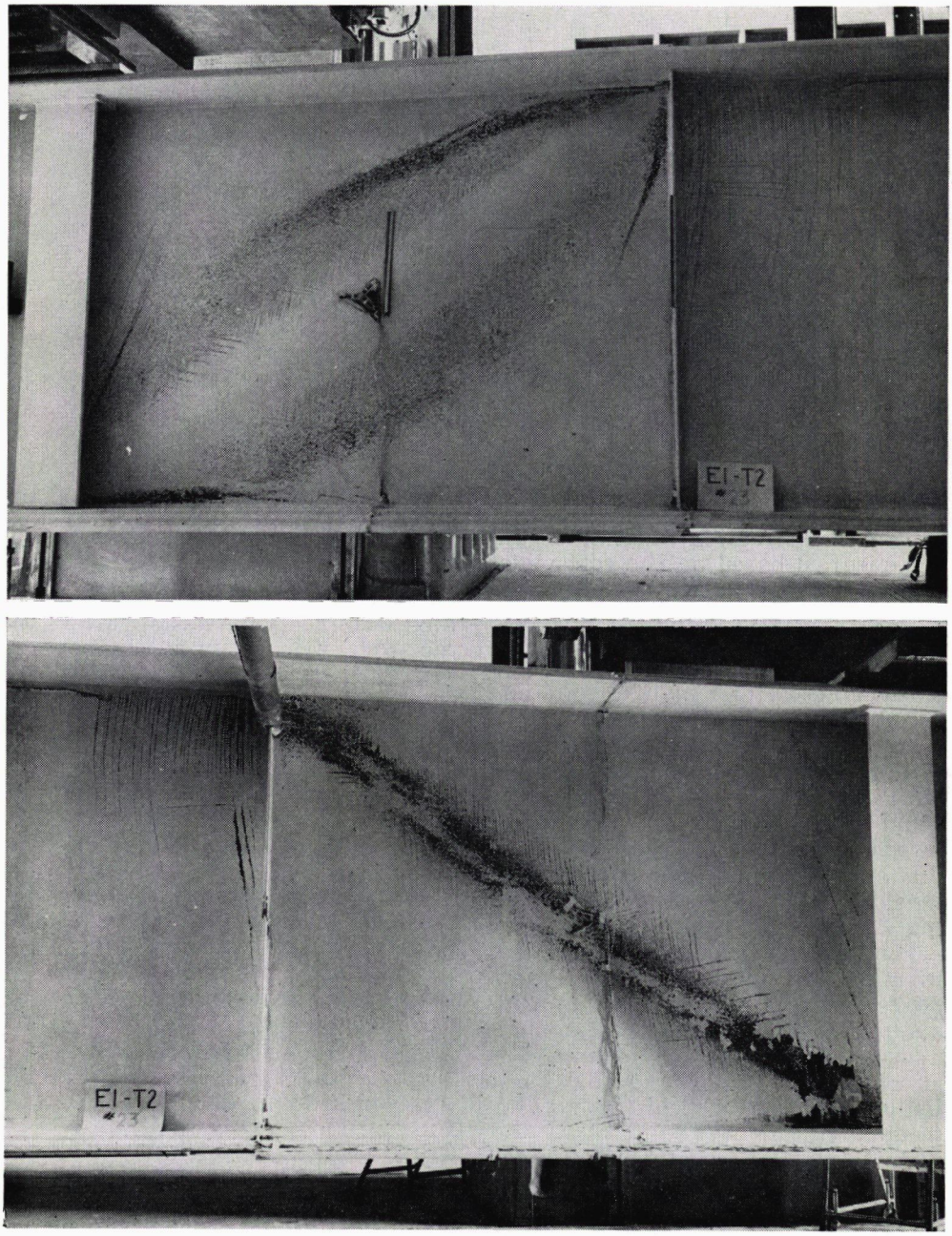

Figure 6. Web deflection.

shear, respectively; τ_{cr} is the web buckling stress; and d/D is the ratio of panel length to web depth. The first term in the bracket corresponds to beam action and the second term is the contribution of tension field action. As the numerator of the second term $(1 - \tau_{cr}/\tau_y)$ shows, tension field action starts only after beam action is developed. For stocky webs with $\tau_{cr}/\tau_y > 1$, beam action can be carried to yielding; hence no tension field action will take place. In such cases, the second term would be omitted.

Eq. 5 may seem too complicated for design purposes. For practical use, this difficulty is overcome by tabulating allowable stresses for different materials (ASTM A7, A36, etc.) and girder dimensions. Table 1 is given as an example. With these tables, it is a simple matter to find the allowable shear stress for a given girder geometry, or conversely, to find the proper stiffener spacing corresponding to a given shear stress.

Size of Intermediate Transverse Stiffeners

The vertical component of the tension field force needs an anchorage. There are only two elements that may possibly serve in such a capacity: the flanges and the transverse stiffeners. The flanges are too flexible to resist any pull in the direction of the web. Consequently, the transverse stiffeners take this responsibility, just as in a Pratt truss the vertical component of the force in a diagonal is transmitted to the neighboring struts.

As the result, the required area of a pair of stiffener plates is (*4*)

$$A_s = \frac{1}{2}\left(1 - \frac{\tau_{cr}}{\tau_y}\right)\left[\frac{d}{D} - \frac{(d/D)^2}{\sqrt{1 + (d/D)^2}}\right] Dt \qquad (6)$$

As in the expression for allowable shear stress, $1 - \tau_{cr}/\tau_y$ expresses the tension field action. The term in the brackets indicates the influence of d/D, the ratio of panel length to web depth; and Dt is the area of the web. This stiffener area requirement is derived to resist the vertical component of the tension field force and is to supplement the existing requirement which provides the necessary rigidity.

Again, the equation can be presented in tabular form for design purposes (Table 1).

Width of End Panel

The horizontal component of the tension field force is transmitted to the neighboring panels, as can be seen by the yield pattern in Figure 6. At the ends of a girder where there is no neighboring panel, there are two methods to cover this situation. The first is to provide an end plate that forms a strong end post over the support to resist the horizontal pull (Fig. 7). The second method is to

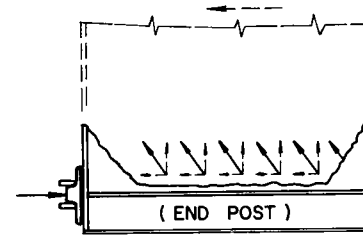

Figure 7. Detail at girder end.

eliminate tension field action in the end panel. To accomplish this, the width of the end panel should be such

TABLE I

ALLOWABLE SHEAR STRESSES IN PLATE GIRDERS (ksi)

REQUIRED GROSS AREA OF INTERMEDIATE STIFFENERS (IN PER CENT OF WEB AREA)

For Yield Point of 33 ksi

Slenderness ratios D/t : web depth to web thickness	Aspect ratios d/D : stiffener spacing to web depth													
	0.5	0.6	0.7	0.8	0.9	1.0	1.2	1.4	1.6	1.8	2.0	2.5	3	OVER 3
60														11.0
70											11.0	11.0	11.0	11.0
80							11.0	11.0	11.0	11.0	10.8	10.5	10.4	10.0
90						11.0	10.9	10.4	10.2 *0.4*	10.0 *0.7*	10.0 *0.8*	9.7 *0.9*	9.6 *0.9*	8.9
100					11.0	10.5	10.1 *0.8*	10.0 *1.3*	9.7 *1.6*	9.5 *1.7*	9.4 *1.8*	9.0 *1.7*	8.9 *1.6*	7.6
110				11.0	10.3 *0.3*	10.1 *1.2*	9.8 *2.0*	9.5 *2.4*	9.2 *2.7*	8.9 *2.9*	8.6 *3.0*	8.1 *2.9*	7.8 *2.7*	6.2
120			11.0	10.3 *0.5*	10.0 *1.6*	9.8 *2.3*	9.4 *3.2*	8.9 *3.9*	8.5 *4.2*	8.1 *4.3*	7.9 *4.2*	7.4 *3.9*	7.1 *3.5*	5.2
130		11.0	10.4 *0.3*	10.0 *1.6*	9.8 *2.6*	9.4 *3.6*	8.9 *4.8*	8.3 *5.3*	8.0 *5.4*	7.6 *5.3*	7.3 *5.2*	6.8 *4.6*	6.4 *4.1*	4.5
140	11.0	10.7	10.1 *1.3*	9.9 *2.6*	9.5 *3.9*	9.0 *5.1*	8.4 *6.1*	8.0 *6.3*	7.5 *6.3*	7.1 *6.2*	6.9 *5.9*	6.3 *5.2*	5.9 *4.6*	3.9
150	11.0	10.3 *0.7*	10.0 *2.2*	9.6 *3.8*	9.1 *5.3*	8.7 *6.4*	8.0 *7.1*	7.6 *7.2*	7.1 *7.1*	6.8 *6.8*	6.5 *6.5*	6.0 *5.7*	5.5 *5.0*	3.3
160	10.8	10.1 *1.5*	9.9 *3.1*	9.3 *5.1*	8.9 *6.5*	8.4 *7.4*	7.8 *7.9*	7.3 *7.9*	6.9 *7.7*	6.5 *7.4*	6.2 *7.0*	5.6 *6.1*	5.2 *5.3*	
170	10.4 *0.3*	10.0 *2.3*	9.6 *4.4*	9.0 *6.3*	8.6 *7.5*	8.2 *8.2*	7.6 *8.6*	7.1 *8.5*	6.6 *8.2*	6.2 *7.8*	6.0 *7.4*	5.3 *6.4*		
180	10.2 *1.1*	9.9 *3.0*	9.3 *5.6*	8.9 *7.2*	8.4 *8.3*	8.0 *8.9*	7.4 *9.2*	6.9 *9.0*	6.4 *8.6*	6.1 *8.2*	5.8 *7.7*			
200	10.0 *2.3*	9.5 *5.2*	9.0 *7.4*	8.5 *8.7*	8.0 *9.5*	7.7 *10.0*	7.1 *10.1*	6.6 *9.8*	6.1 *9.3*	5.8 *8.8*				
220	9.8 *4.0*	9.2 *6.8*	8.7 *8.7*	8.2 *9.8*	7.4 *10.5*	7.5 *10.8*	6.9 *10.7*	6.3 *10.3*						
240	9.5 *5.5*	9.0 *8.1*	8.5 *9.7*	8.0 *10.6*	7.7 *11.2*	7.3 *11.4*	6.7 *11.2*							
260	9.3 *6.8*	8.8 *9.0*	8.3 *10.4*	8.0 *11.3*	7.5 *11.7*	7.1 *11.9*								
280	9.1 *7.7*	8.7 *9.8*	8.2 *11.1*	7.8 *11.8*	7.4 *12.2*									
300	9.0 *8.5*	8.5 *10.4*	8.1 *11.6*	7.7 *12.2*										
320	8.9 *9.2*	8.4 *10.9*	8.0 *12.0*											
340	8.8 *9.7*	8.4 *11.3*												
360	8.8 *10.1*													

that only beam action takes place. This is specified by the rule,

$$d = \frac{9{,}000\ t}{\sqrt{S}} \qquad (7)$$

INTERACTION BETWEEN BENDING AND SHEAR

At locations in a girder where both bending moment and shear force are high, tensile and shear stresses must be kept within the allowable values.

It was pointed out that a web transfers bending stress to the flange and an adjusted allowable bending stress (σ'_a) is established. As long as this stress (σ'_a) is not exceeded, the transfer does not reduce the factor of safety for the bending stress and the web carries only shear. Because the adjusted allowable bending stress is dependent on the girder geometry, a consideration of the practical range of girder geometry will help to establish a limit that will exclude the possibility of overstressing the girder.

This limit has been established (*5*) and is shown in Fig. 8. When the bending stresses are less than 75 percent or the shear stresses are less than 60 percent of their respective allowable values, no interaction check is necessary. Otherwise, the allowable stress is given by the inclined line in the figure. For ASTM A7 steel girders, for example, this is

$$\sigma = 24.5 - 11\ \frac{\tau}{\tau_a} \qquad (8)$$

Where τ is the actual average shear stress in the web.

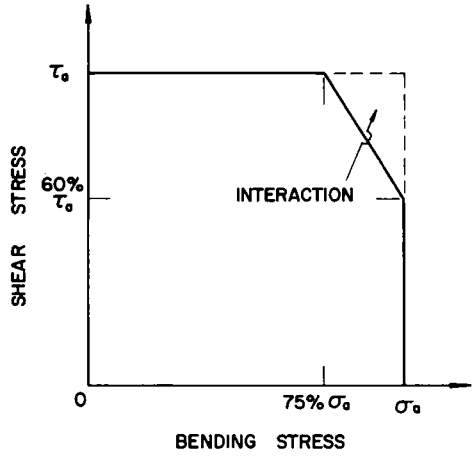

Figure 8. Allowable stresses for interaction

SUMMARY

The static carrying capacity of a plate girder under bending depends essentially on the compression flange and the capacity under shear depends on the web and stiffeners. The results of the investigation are given in terms of design rules for use with highway bridges. Additional design details not considered here (such as the fastening of stiffeners to the girder) have been investigated and are discussed in the references cited. Some other important features for bridge girders (horizontal stiffeners, combination of different materials, repeated loadings) are presently being investigated.

ACKNOWLEDGMENTS

This report is based on research conducted at Fritz Engineering Laboratory, Lehigh University, Bethlehem, Pa., under the direction of Lynn S. Beedle.

The investigation was jointly sponsored by the Pennsylvania Department of Highways; the U. S. Department of Commerce, Bureau of Public Roads; the American Institute of Steel Construction; and the Welding Research Council.

The assistance of Peter B. Cooper and L. S. Beedle in preparing the manuscript is gratefully acknowledged.

REFERENCES

1. BASLER, K., YEN, B. T., MUELLER, J. A., and THÜRLIMANN, B., "Web Buckling Test on Welded Plate Girders." Bull. No. 64, Welding Research Council (Sept. 1960).
2. BASLER, K., and THÜRLIMANN, B., "Strength of Plate Girders in Bending." *Proc. ASCE*, Vol. 87, ST6 (1961).
3. "Guide to Design Criteria for Metal Compression Members." Column Research Council (1960).
4. BASLER, K., "Strength of Plate Girders in Shear." *Proc. ASCE*, Vol. 87, ST7 (1961).
5. BASLER, K., "Strength of Plate Girders Under Combined Bending and Shear." *Proc. ASCE*, Vol. 87, ST7 (1961).