Module 9: Seismic Pocket and Socket Connection Design and Detailing

This module covers:

- Pocket Connections
- Socket Connections

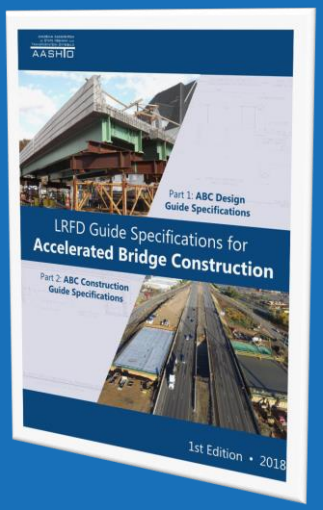

This module covers:

- Seismic Pocket Connections
- Seismic Socket Connections

To recap definitions:

A pocket connection consists of a recess in one element that receives extended reinforcement from the adjacent element.

A socket connection is where one portion of an element is inserted into an opening of another element or into a cast-in-place concrete pour.

3.6.6 Pocket Connections

Pocket connections may be used to connect elements with a formed recess in a precast concrete element that is used to receive reinforcement or other mechanical devices that are projecting from another element or a previously cast element.

The Designer shall identify the load path through the element to provide proper detailing for force transfer to adjacent elements. Typically, such connections are adjacent to plastic hinging locations and the anchorage of reinforcement from the column into the pocket is considered part of the ED element.

Source: Restrepo et al. (2011)

Article 3.6.6 of the Guide Specifications for ABC covers Pocket Connections.

A pocket connection is similar to a grouted duct, but a larger recess is constructed in either CIP or precast element that is designed to receive all the vertical reinforcing from a column and then filled with CIP concrete or grout.

If the pocket is used adjacent to the plastic hinge, a portion of the pocket is considered part of the Energy Dissipating (ED) element and part of it is considered for capacity protection for over-strength forces.

The seismic performance of pocket connections for column-to-pier cap assemblies has only been assessed in laboratory tests involving the use of lock-seam corrugated steel pipes. As a result, the steel pipes are limited to ASTM A760.

3.6.6 Pocket Connections

3.6.6.2—Formed Pocket and Fill

Pockets shall be formed using steel pipe with helical corrugations and a continuous lock-seam extending from end-to-end of each of the pipe. The steel pipe shall conform to ASTM A 760. Pockets shall be filled with either concrete, self-consolidating concrete, ~~or grout~~.

Clear spacing between the reinforcing steel and the pocket form shall be at least 1.5 times the largest aggregate's size and no more than 4 inches.

No grout permitted

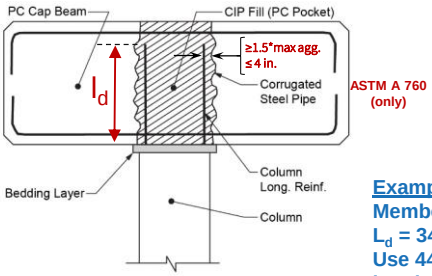

Figure C3.6.6.1-1—Pocket Connection

3.6.6.3—Minimum Development Length of Reinforcing Steel in Pocket Connections

Column longitudinal reinforcement shall be extended as close as practically possible to the opposite face of the receiving member. The anchorage length for longitudinal column grade 60 bars developed into the receiving member shall satisfy:

$$l_d \geq \frac{d_{bl} f_{ye}}{\sqrt{f'_{cp}}} \qquad (3.6.6.3\text{-}1)$$

where:

l_d = anchored length of column longitudinal reinforcing bars into the pier cap or footing (in.)

d_{bl} = nominal diameter of column longitudinal bar (in.)

f_{ye} = expected yield stress of longitudinal reinforcement (ksi)

f'_{cp} = nominal compressive strength of pocket concrete ~~or grout~~ (ksi)

Example:
Member depth = 48 inches
L_d = 34 inches
Use 44 inches for embedment of column longitudinal reinforcement

Article 3.6.6.3 of the Guide Specifications for ABC covers the minimum development length for the reinforcing steel within the pocket. This is defined by equation 3.6.6.3-1 (shown in the yellow box).

An example is shown in the blue text with a member depth of 48". Note that the calculated development length is only 34 inches for the longitudinal bars. The provision for this article requires that the longitudinal bars be extended as close as practical to the opposite face of the element. In this case, a bar length of 44 inches would be used to bring the longitudinal bars up close to the opposite face of the receiving member, but just short of the top bars in the cap.

Article 3.6.6.2 requires that the minimum edge clearance between the vertical column bars and the corrugated steel pipe (shown in the red text added to Fig. C3.6.6.1-1) is greater than 1.5 x maximum aggregate size, but less than 4 inches.

3.6.5 & 6 Development Length Comparison

3.6.5.1 Grouted Duct Development Length

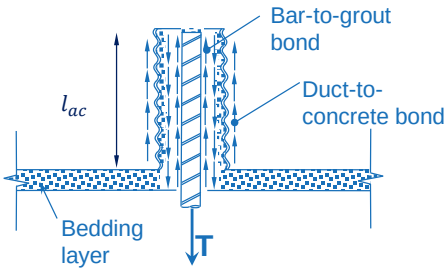

$$l_{ac} \geq \frac{0.67 d_{bl} f_{ye}}{\sqrt{f'_g}}$$

3.6.6.3 Pocket Connection Development Length

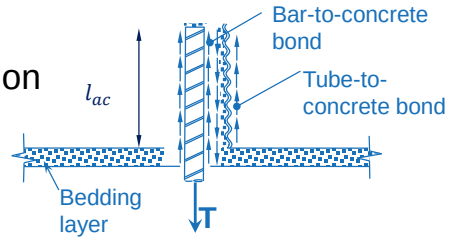

$$l_{ac} \geq \frac{d_{bl} f_{ye}}{\sqrt{f'_{cp}}}$$

This slide shows a comparison of the two empirical formulas used for grouted ducts and pocket connections.

Article 3.6.5.1 of the Guide Specifications for ABC covers the development length of bars in grouted duct connections. Article 3.6.6.3 of the Guide Specifications for ABC covers the development length of bars in pocket connections.

A question that one might ask is: Why the additional reduction for the grounded duct? The answer is: The added localized confinement completely encapsulates the bar and develops a strut to the corrugated duct in every direction reducing the length of development consistently by more than 33%.

Recall that for both of these situations, the design embedment may be controlled by the load path requirements to other elements such as spliced bars outside the duct or corrugated metal pipe.

Development Length Comparison

Per AASHTO LRFD BDS (For force-based analysis, except for SDCs C and D):

$$l_{db} := 2.4 \cdot d_{bl} \cdot \frac{f_y}{\sqrt{f'_c \cdot 1ksi}} = \boxed{101.52 \cdot in}$$

basic tension development length, (5.10.8.2.1a-2, AASHTO LRFD BDS)

$$l_d := l_{db} \cdot \frac{(\lambda_{rl} \cdot \lambda_{cf} \cdot \lambda_{rc} \cdot \lambda_{er})}{\lambda} = 40.608 \cdot in$$

modified tension development length, (5.10.8.2.1a-1, AASHTO LRFD BDS)

$\lambda_{rl} := 1.0$ reinforcement location factor

$\lambda_{cf} := 1.0$ coating factor

$\lambda_{rc} := 0.4$ excess reinforcement factor (assumed value)

$\lambda_{er} := 1.0$ reinforcement confinement factor

$\lambda := 1.0$ concrete density modification factor, per AASHTO LRFD BDS Article 5.4.2.8

Using #11 A706 Reinforcing …

Per AASHTO SGS (For displacement-based analysis and force-based analysis of SDCs C and D):

$$l_{ac} := \frac{(0.79 \cdot d_{bl} \cdot f_{ye})}{\sqrt{f'_c \cdot 1ksi}} = \boxed{37.9 \cdot in}$$

minimum anchored length of longitudinal reinforcing bars in cap beam or footing, (8.8.4-1, AASHTO SGS)

3.6.5.1 - Minimum development length of Reinforcing Steel in Grouted-Duct Connections

$$l_{d,duct} := 0.67 \cdot d_{bl} \cdot \frac{f_{ye}}{\sqrt{f'_g \cdot 1ksi}} = \boxed{32.12 \cdot in}$$

(3.6.5.1-1) $f_g <= 8$ ksi

3.6.6.3 - Minimum Development Length of Reinforcing Steel in Pocket Connections

$$l_{d,pocket} := d_{bl} \cdot \frac{f_{ye}}{\sqrt{f'_{cp} \cdot 1ksi}} = \boxed{47.94 \cdot in}$$

anchored length of column longitudinal reinforcement bars into the pier cap or footing (3.6.6.3-1)

Note: f'_{cp} = 4 ksi

@ f'_{cp} = 5 ksi; $L_{d,pocket}$ = 42.9 in

This slide shows a comparison of the various development lengths (rounded up to the nearest inch) that can be used depending on the specification and application:

AASHTO LRFD Bridge Design Specifications = 102 inches (full strength)

AASHTO Seismic Guide Specifications = 38 inches

Guide Specifications for ABC – Grouted Duct = 33 inches

Guide Specifications for ABC – Pocket = 48.0 inches

3.6.6.4 Corrugated Steel Pipe Thickness for Pocket Connections

A minimum thickness of corrugated steel pipe shall be used to satisfy the minimum joint transverse reinforcement ratio in the *AASHTO Guide Specifications for LRFD Seismic Bridge Design*. The thickness of the steel pipe shall satisfy Equations 3.6.6.4-1 or 3.6.6.4-2. Additional prescriptive transverse reinforcement is also required, as described below.

- For SDC B (Seismic Zone 2):

$$t_{pipe} \geq max \begin{cases} \dfrac{0.11\sqrt{f'_{cp}}\,D'_{cp}}{4f_{ypipe}\cos(\alpha)} \\ 0.060\ in. \end{cases} \qquad (3.6.6.4\text{-}1)$$

- For SDCs C and D (Seismic Zones 3 and 4):

$$t_{pipe} \geq max \begin{cases} \dfrac{\rho_s D'_{cp} f_{yh}}{4f_{ypipe}\cos(\alpha)} \\ 0.060\ in. \end{cases} \qquad (3.6.6.4\text{-}2)$$

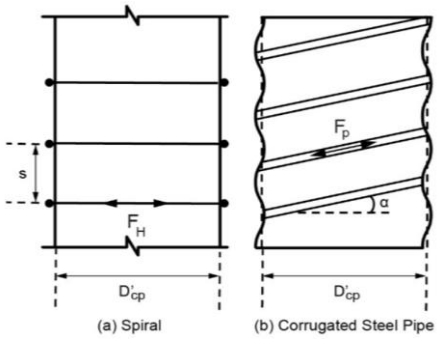

Figure C3.6.6.4-1—Confinement Provided by Spiral and Corrugated Steel Pipe

Article 3.6.6.4 of the Guide Specifications for ABC covers Corrugated Steel Pipe Thickness for Pocket Connections.

This provision specifies the minimum steel thickness for the pipe that forms the pocket. The intent of the provision is to ensure that the forming corrugated steel pipe can provide at least the same level of confinement as that provided by the minimum joint shear (transverse) reinforcement for SDCs C and D in a CIP connection.

The minimum thickness of the steel of 0.060 in. corresponds to 16 gage steel pipe, which is the thinnest gage steel corrugated pipe that is commercially available for pocket sizes of practical interest in bridge applications.

As the engineer, you should calculate the thickness needed, based on concrete strength within the pocket, pocket diameter, and the parameters of the pipe selected, yield strength and seem pitch.

The volumetric ratio of transverse reinforcement is discussed on the next slide.

3.6.6.4 Corrugated Steel Pipe Thickness for Pocket Connections

ρ_s = volumetric ratio of transverse reinforcement

ρ_s shall be calculated as the minimum joint shear reinforcement ratio for SDCs C and D in the *AASHTO Guide Specifications for LRFD Seismic Bridge Design.*

When principal tension stress in the joint is not calculated, ρ_s in Equation 3.6.6.4-2 shall be taken as:

$$\rho_s = \max \begin{cases} \dfrac{0.11\sqrt{f'_{cp}}}{f_{yh}} \\ 0.40\dfrac{A_{st}}{l_d{}^2} \end{cases} \qquad (3.6.6.4\text{-}3)$$

where:

l_d = anchored length of longitudinal reinforcing bars into the pier cap or footing (in.) as determined from Article 3.6.6.3

A_{st} = total area of column reinforcement anchored in the joint.

For SDC B (Zone 2), individual supplementary hoops shall be placed just above and just below the top and bottom layer of reinforcing. These hoops shall be the same size as the column transverse steel and shall be welded with either butt welded or fillet welded to itself.

For SDCs C and D (Seismic Zones 3 and 4), corrugated steel pipe shall be assumed to satisfy the minimum joint transverse reinforcement ratio in the *AASHTO Guide Specifications for LRFD Seismic Bridge Design* when supplemented with

1) additional hoops at the top layer of reinforcement as described above for SDC B and

2) hoops along the bottom half (adjacent to the column) sized and spaced the same as the column transverse reinforcement.

The volumetric ratio of transverse reinforcement, ρ_s, shall be calculated as the minimum joint shear reinforcement ratio for SDCs C and D in *AASHTO Guide Specifications for LRFD Seismic Bridge Design.*

l_d = anchored length of longitudinal reinforcing bars into the pier cap or footing (in.) as determined from Article 3.6.6.3

A_{st} = total area of column reinforcement anchored in the joint.

For SDC B (Zone 2), individual supplementary hoops shall be placed just above and just below the top and bottom layer of reinforcing.

For SDCs C and D (Seismic Zones 3 and 4), corrugated steel pipe shall be assumed to satisfy the minimum joint transverse reinforcement ratio in *AASHTO Guide Specifications for LRFD Seismic Bridge Design* when supplemented with

1. Additional hoops at the top layer of reinforcement as described above for SDC B, and
2. Hoops along the bottom half (adjacent to the column) sized and spaced the same as the column transverse reinforcement.

3.6.6 Pocket Connections - Col-Xbeam Design Example

Reinforcement Layout and Pocket Geometry

Column Rebar - (40) #11:

- d_{bl} = 1.41” — longitudinal bar diameter
- A_{bl} = 1.56 in^2 — longitudinal bar area
- n_l = 40 — # longitudinal bars
- $A_{st} = n_l * A_{bl}$ = 62.4 in^2 — longitudinal steel area

CMP Pocket Properties

- α = 30° — corrugation pitch angle
- D'_{cp} = 6 ft — pipe corrugation center-to-center dist.

Material Properties

Pocket Concrete Properties:

- f'_{cp} = 4 ksi — pocket concrete compressive strength

Rebar Steel Properties (ASTM A615 Gr 60):

- f_y = 60 ksi — nominal yield strength
- f_{ye} = 68 ksi — expected yield strength
- $f_{yh} = f_{tr}$ = 60 ksi — transverse steel yield strength

Corrugated Steel Pipe Properties (ASTM 760):

- f_{ypipe} = 33 ksi — CSP steel yield strength

We will now go over this connection design using the parameters from the previous examples.

The reinforcement layout and pocket geometry include (40) #11 bars in the column and a 6ft wide pocket with a 30-degree pitch angle for the corrugations.

Material properties include pocket grout, A615 Gr 60 reinforcement, and ASTM A760 corrugated steel pipe.

3.6.6 Pocket Connections - Col-Xbeam Design Example

Assume SDC C or D:

Min. anchored length of column longitudinal reinforcement bars into pier cap (or footing):

$$l_{d,pocket} := d_{bl} \cdot \frac{f_{ye}}{\sqrt{f'_{cp} \cdot 1ksi}} = \boxed{47.94 \cdot in}$$

Min. Volumetric ratio of transverse reinforcement:

$$\rho_s := \max\left[\frac{\left(0.11 \cdot \sqrt{f'_{cp} \cdot 1ksi}\right)}{f_{yh}}, 0.4 \cdot \frac{A_{st}}{l_{d,pocket}^{2}}\right] = \boxed{0.011}$$

Min. thickness of corrugated steel pipe:

$$t_{pipe,CD} := \max\left(\frac{\rho_s \cdot D'_{cp} \cdot f_{yh}}{4 \cdot f_{ypipe} \cdot \cos(\alpha)}, 0.060in\right) = \boxed{0.41 \cdot in}$$

Consider supplemental hoops or spirals to get a more conventional pipe thickness

Using an SDC of C or higher, the min. anchorage length of column longitudinal reinforcement bars into pier cap is calculated as 48 inches.

The middle calculation is for the minimum volumetric ratio of transverse reinforcement.

The last equation calculates the minimum thickness of the corrugated steel pipe at 0.41 inches.

The designer should investigate what is commercially available to ensure that this thickness is available. If not, supplemental hoops can be detailed outside the pipe to provide adequate confinement.

3.6.6 Pocket Connections - Other Sections

3.6.6.5 Bedding Layer

3.6.6.6 Abutment to Pile Pocket Connections

The nominal shear transfer resistance at the pocket-to-precast abutment interface, V_n, shall be calculated as follows:

$$V_n = 0.13\sqrt{f'_{cp}}\,Acv \qquad (3.6.6.6\text{-}1)$$

where:

f'_{cp} = nominal compressive stress of the pocket concrete (ksi)

A_{cv} = cylindrical shaft area of the pocket (in.^{2})

The cylindrical shaft area of the pocket, A_{cv}, shall be calculated as:

$$A_{cv} = \pi\, d_v\, h_v \qquad (3.6.6.6\text{-}2)$$

where:

d_v = inside diameter of the CMP pocket (in.)

h_v = effective height of the CMP pocket (in.)

Article 3.6.6.5 of the Guide Specifications for ABC includes requirements for bedding layers on pocket connections. Article 3.6.6.6 of the Guide Specifications for ABC covers abutment to pile pocket connections. The critical load transfer in this article is the development of the shear (confinement) capacity in the precast element around the pocket.

A design example of this connection was covered in module 2 of this training.

3.6.7 Socket Connections

Socket connections can be used to connect elements by inserting one element into an opening in another element or into a cast-in-place concrete pour.

3.6.7.1—General

The design and construction of socket connections, including embedment of a prefabricated column or pile into a receiving spread footing, pile cap, drilled shaft, or pier cap shall conform to the requirements of this section.

For socket connections, the primary source of force transfer at the connection is by shear and bearing across the mating surfaces of the socket. The Designer shall identify the load path through the surfaces to provide proper detailing for force transfer to adjacent elements.

In socket connections, the energy dissipating (ED) zone is within the element being inserted into the socket. Accordingly, the connection between the precast element and CIP element is a CP connection.

For SDCs C and D (Seismic Zones 3 and 4), where the receiving element is designed to resist the overstrength moments and shears of the ductile embedded element, the effective width of the receiving element shall be taken in accordance with the recommendations of the *AASHTO Guide Specifications for LRFD Seismic Bridge Design.*

Socket can be:

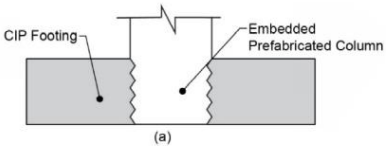

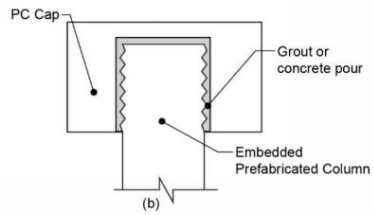

a) Wet (cast-in-place) b) Formed (precast)

Article 3.6.7 of the Guide Specifications for ABC covers socket connections.

A “wet socket” connection, pictured on the left, is one in which the precast column is first placed in the excavation, then fresh concrete is poured around it to create the footing.

By contrast, a “dry socket” connection, the picture on the right, refers to a footing that is constructed with an opening, into which the precast column is placed, then grout is placed between the column and cap/footing to form a composite assembly. In either case, the primary source of force transfer at the connection is via interface shear and bearing across the mating surfaces of the socket.

3.6.7.2 Precast Concrete Column in Spread Footing or Pile Cap Socket Connection

To maintain integrity of aggregate interlock across the interface, the embedded element and associated construction loads shall be supported until the cast-in-place concrete or grout around the footing gains sufficient strength. If the column is temporarily supported directly by soil, a sacrificial slab shall be used to prevent relative settlement during construction unless it can be shown that the supporting soil has adequate resistance.

The embedment depth of the column shall not be less than 1.0 times its diameter. Column longitudinal bars shall be fully anchored within the depth of the footing or pile cap.

Column bars shall be terminated with mechanical anchorages capable of developing the required bar strength. The anchorages shall be placed below the bottom mat of footing reinforcement or top mat of pile cap reinforcement.

For socket connections with an embedment depth, l_e, of less than $1.5D_c$, the interface of the precast column with the footing or pile cap shall be intentionally roughened to an amplitude of not less than 0.25 inches.

The socket connection shall be designed to adequately transfer shear forces across the interface planes per the interface shear requirements of the *AASHTO LRFD Bridge Design Specifications*. The cohesion factor, *c*, the friction factor, μ, and the factors K1 and K2 shall be taken as those for normal-weight concrete placed against a clean concrete surface, except that μ shall not exceed 0.5 where embedment depth is less than 1.1 times the column diameter.

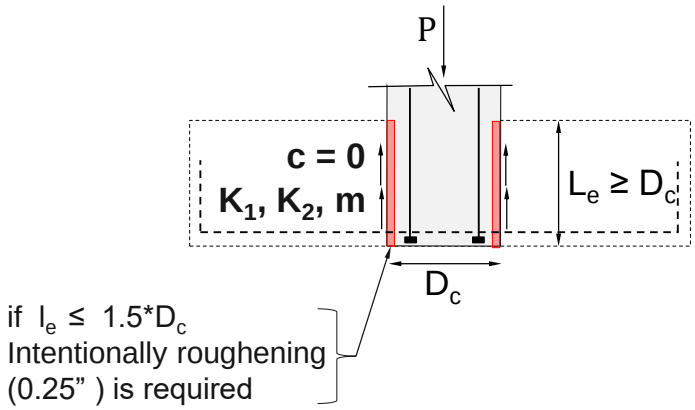

Article 3.6.7 of the Guide Specifications for ABC covers precast concrete columns in spread footing or pile cap socket connections. Research has shown that the plastic moment capacity of a column can be developed for embedment depths greater than 1.0Dc. The analogy to this connection is a mortice and tenon joints in woodworking, which is well known to be a solid connection.

Headed bars at the embedded end of the column are required to provide a more direct load path for the transfer of moment and shear into the footing and improve joint behavior as compared to the traditional hooked reinforcement layout in CIP construction. The specification also requires that the mechanical anchors be placed below the bottom mat of footing reinforcement, as can be seen in the detail to the right.

A roughened surface (quarter inch minimum) at the interface is required for embedment depths less than or equal to1.5 times the diameter of the column.

The gravity force transfer is ensured by following the shear friction requirements of the AASHTO LRFD Bridge Design Specifications. The cohesion factor, c, the friction factor, μ, and the factors K1 and K2 are those for normal-weight concrete placed against a clean concrete surface, except that μ shall not exceed 0.5 where embedment depths are less than 1.1 times the diameter of the column.

3.6.7.2 Precast Concrete Column in Spread Footing or Pile Cap Socket Connection

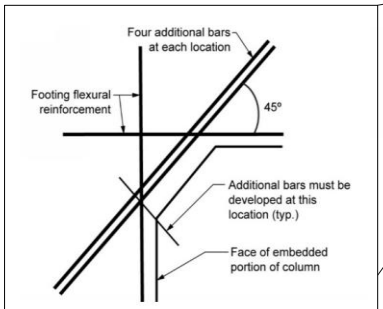

Figure C3.6.7.2.1-2—Placement of Additional Bars at 45º to Main Footing Reinforcement

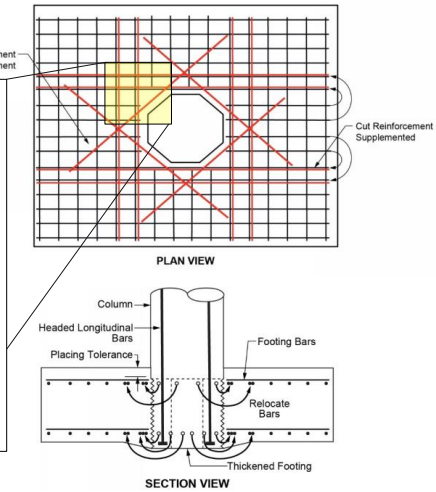

Figure C3.6.7.2-1—Placement of Footing Bars with a Socket Connection

Footing or pile cap reinforcement shall be distributed uniformly across the width of the element, but those bars that conflict with the column shall be supplemented with the same number of bars/size on both sides of the column.

Shear friction bars shall be provided at 45 degrees to the footing or pile cap reinforcement and they need not cross the interface with the precast column. These additional bars shall be of the same size as the main footing or pile cap reinforcement and be fully developed at the projection of the perpendicular column face. Standard hooks or mechanical anchors may be used to reduce the required development length of these bars. It is recommended that four bars be placed at each of four locations around the column. Such additional bars shall be placed in pairs near the top and bottom reinforcement of the footing or pile cap.

This provision includes several detailing requirements associated with this socket connection.

Supplemental reinforcing bars shall be placed at a 45-degree angle to the element to provide confinement of the corners of the column and develop a clamping force and the corresponding shear friction resistance across the precast-CIP interface. This is to be consistent with the research testing that has been conducted to date.

The footing reinforcement needs to be adjusted around the column. The bars that conflict with the column are cut at the column. Supplemental bars of the same number and size are placed on both sides of the column.

3.6.7.2 Precast Concrete Column in Spread Footing or Pile Cap Socket Connection Design Example

Reinforcement Layout and Properties

Column Rebar - (40) #11:

- d_{bl} = 1.41” — longitudinal bar diameter
- d_{bh} = 0.75” — transverse bar diameter
- A_{bl} = 1.56 in^2 — longitudinal bar area
- n_l = 40 — # longitudinal bars
- A_{st} = 62.4 in^2 — longitudinal steel area

Column Clear Cover:

- cvr_{typ} = 2” — typical clear cover
- cvr_{socket} = 1” — minimum column clear cover in socket section

Material Properties

Concrete Properties:

- f'_c = 4 ksi — concrete compressive strength

Rebar Steel Properties (ASTM A615 Gr 60):

- f_y = 60 ksi — nominal yield strength
- f_{ye} = 68 ksi — expected yield strength
- $f_{yh} = f_{tr}$ = 60 ksi — transverse steel yield strength

This slide and the following slides show an example design using the same parameters in the previous examples, which are shown on the slide.

3.6.7.2 Precast Concrete Column in Spread Footing or Pile Cap Socket Connection Design Example

Socket connection interface area geometry using octagonal column end section

Effective Width of Socket Conn. Interface Area

- D_c = 72” typ. column section diameter
- D’ = 67.25” center-to-center diameter of spiral reinforcement
- b_{leg} = 29” length of single leg of octagon
- b_{peri} = $8*b_{leg}$
  = 232” perimeter length of octagonal section
- b_{eff} = $^1/_3\ b_{peri}$
  = 77.3” effective length of perimeter participating in shear resistance**
- $b_{vi} = b_{eff}$

** NOTE: the effective length of the column perimeter participating in shear resistance is currently a knowledge gap in the theory and is the topic of ongoing research.

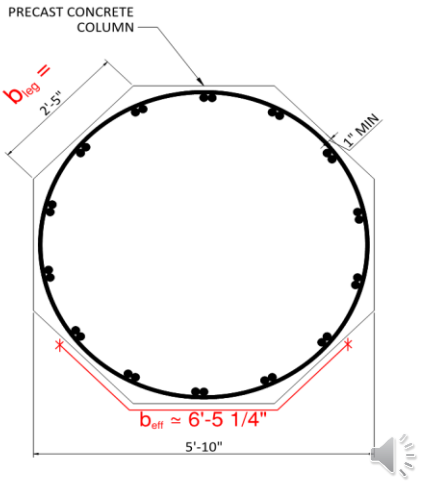

In this example, the round column is changed to an octagon-shaped column. This facilitates fabrication as the column can be cast on its side, leaving one facet open for the placement of the precast concrete.

The effective width of the socket connection interface area parameter is shown on the slide.

Note that the effective length of the column perimeter participating in shear resistance is currently a knowledge gap in the theory and is the topic of ongoing research. The value used in this calculation is a conservative rough approximation based on engineering judgement; taken as 1/3 of the column perimeter. This assumes that there is limited resistance on the side of the column that is theoretically pulling away from the footing. Specifications for roughening of the columns are included in this provision. If the corrugations are large enough, the designer might consider using the entire perimeter for this calculation.

3.6.7.2 Precast Concrete Column in Spread Footing or Pile Cap Socket Connection Design Example

Socket Connection interface area geometry using octagonal column end section

Effective Depth of Socket Conn. Interface Area

- l_{ac} = 37.9” — min. anchored length of longitudinal bars into footing per AASTHO SGS 8.8.4-1
- l_e = min(l_{ac}, D_c) = 72” — min. anchored length of precast column into footing socket connection*
- $l_{p,ftg}$ = $0.15 f_{ye} d_{bl}$ = 14.4” — portion of plastic hinge length attributable to strain penetration into footing per AASHTO SGS C4.11.6
- l_{vi} = $l_e - l_{p,ftg}$ = 57.6” — effective depth of area participating in interface shear resistance

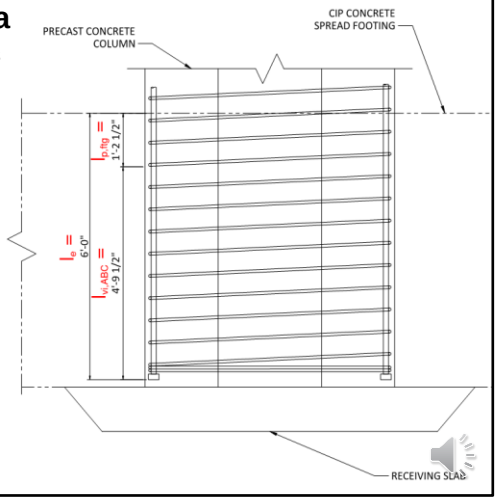

*NOTE: l_e <1.5*D_c, therefore interface area must be intentionally roughened to ¼” min.

Continuing with this socket connection design example. The designer needs to determine the effective depth of the socket.

The first step is to determine the minimum anchorage length required for the column longitudinal bars. Then the designer would determine the portion of the plastic hinge penetrating into the footing attributed to strain penetration. The effective depth is the anchorage length minus the plastic hinge length in the footing.

Note that in this example, the minimum anchorage length is less than 1.5*Dc, therefore the interface area of the column needs to be intentionally roughened to ¼ inch minimum amplitude in accordance with this provision.

3.6.7.2 Precast Concrete Column in Spread Footing or Pile Cap Socket Connection Design Example

Minimum shear friction reinforcement and nominal interface shear resistance

Effective Shear Interface Area

- b_{vi} = 77.3" — effective width of shear interface area
- l_{vi} = 57.6" — effective depth of shear interface area
- $A_{cv} = b_{vi} * l_{vi}$ = 4455 in^2 — effective shear interface area per AASHTO BDS 5.7.4.3-6
- A_{vf} = 0 in^2 — No shear friction reinforcement across shear plane
- $P_c = 0$ — permanent net compressive force normal to the shear plane (assumed)

Interface shear friction and cohesion factors:

$c_{ABC} := 0.075\text{ksi}$

$$\mu_{ABC} := \begin{cases} 0.6 & \text{if } l_e > 1.1 \cdot D_c \\ 0.5 & \text{otherwise} \end{cases} = 0.5$$

$K_{1,ABC} := 0.2$

$K_{2,ABC} := 0.8\text{ksi}$

$$V_{ni} = c_{ABC} * A_{cv} + \underbrace{\cancel{\mu_{ABC} * (A_{vf} * f_y + P_c)}}_{0\text{ kips}} = \boxed{334\text{ kips}}$$

Now that we have the effective width and depth of the shear interface, the vertical shear resistance of the connection can be determined using the provisions in the AASHTO LRFD Bridge Design Specifications. For this socket connection, there is no shear friction reinforcement and no permanent net compression force between the column and the footing, therefore the second portion of the resistance equation would be zero.

The Guide Specifications for ABC provide the interface shear friction and cohesion factors for the socket connection as shown. Substituting these into the AASHTO LRFD Bridge Design Specification equations, we have a nominal resistance of 334 kips. The designer would then verify that the connection can resist the over-strength shear demands from the column and determine if the connection can resist the applied vertical reaction. If not, the thickness of the footing can be increased to improve the shear friction resistance.

3.6.7.3 Precast Concrete Column in Oversized CIP Concrete Shaft Socket Connection

Where socket connections are used to connect precast columns to drilled shafts or pile shafts, the following requirements shall apply. Designers shall obtain approval from the Owner for the use of this connection or for any modifications to this design provision.

For socket connections with an embedment depth, l_e, of 1.5 times the column diameter or less, the column-to-shaft side interface of the precast column with the shaft shall be intentionally roughened to a minimum amplitude of 0.25 inches.

As indicated above, this connection is a CP connection.

3.6.7.3.1—Development Length of Column Bars Extended into Oversized Drilled Shafts for Socket Connections

Column bars extended into oversized shafts may be terminated with straight bar embedment or mechanical anchorages capable of developing the required column bar strength (Class HA per ASTM A970) as shown in Figure 3.6.7.3.1-1. All column bars may be terminated at the same location, provided the confinement reinforcing steel in Article 3.6.7.3.2 is included.

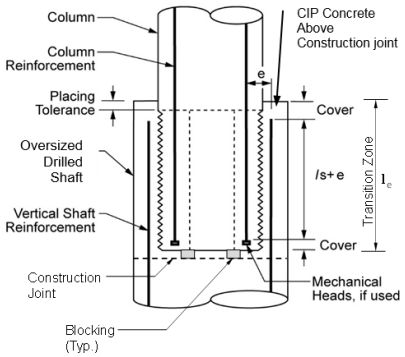

Figure 3.6.7.3.1-1 Column-to-Shaft Longitudinal Bar Arrangement

Article 3.6.7.3 of the Guide Specifications for ABC covers the connection of a precast concrete column to an oversized CIP concrete shaft.

The designer needs to determine how the longitudinal bars are developed or anchored into the shaft. This can be done with straight bars developed in accordance with the AASHTO LRFD Bridge Design Specifications or the AASHTO Seismic Guide Specification or with headed bars developed in accordance with the Guide Specifications for ABC, Article 3.6.2.3.1.

If the embedment depth (le) is less than 1.5*Dc, then the interface of the column connection has to be intentionally roughened to a minimum amplitude of ¼ inch.

The connection is completed with the placement of CIP concrete around the base of the precast column.

3.6.7.3.1 Precast Concrete Column in Oversized CIP Concrete Shaft Socket Connection

Minimum Development Length

$$l_e \geq l_s + e + c \qquad (3.6.7.3.1\text{-}1)$$

where:

l_e = total embedment length of precast column in shaft,

l_s = splice length of controlling bar (in.) taken as $1.7l_d$, where l_d is the tension development length of reinforcing steel as determined with the *AASHTO LRFD Bridge Design Specifications* except for SDCs C and D where l_d shall be taken as the anchorage length of longitudinal reinforcing bars, l_{ac}, per the *AASHTO Guide Specifications for LRFD Seismic Bridge Design*

e = largest center-to-center distance between column and shaft bars (in.)

c = total bar end cover distance of both column and shaft bars (in.)

If the precast column is to be cast horizontally, l_d shall be increased by a factor of 1.4, except when column bars embedded into the oversized shaft are anchored with mechanical heads.

The largest center-to-center distance between column and shaft bars, e, shall consider the maximum allowable construction horizontal deviation in placement of precast column in the oversized shaft as illustrated in Figure 3.6.7.3.1-2.

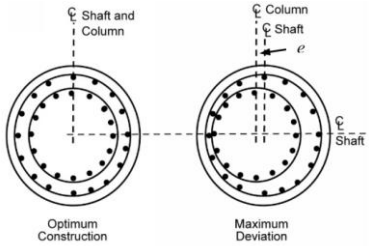

Figure 3.6.7.3.1-2—Column Placing Horizontal Deviation

The minimum embedment length (le) equation from Article 3.6.7.3.1 is shown. The designer specifies:

1. The embedment length of the column
2. determines the splice length (ls) of the provisions being used
3. the total bar cover distance (c), and
4. the largest center-to-center distance (e) between column and shaft longitudinal bars.

This center-to-center distance shall be considered the maximum allowable construction horizontal deviation between column to shaft and shall be included in the contact documents as a requirement.

3.6.7.3 Precast Concrete Column in Oversized CIP Concrete Shaft Socket Connection

Spiral/Hoops Requirement

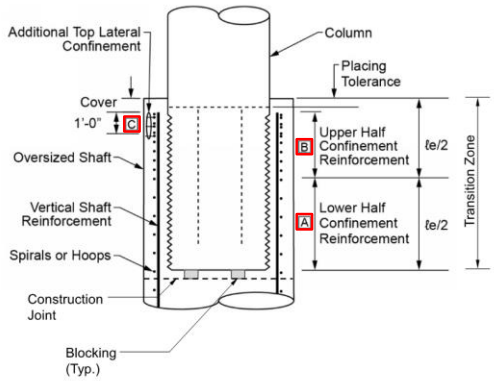

Figure C3.6.7.3.2-1—Tie Reinforcement for a Socket-Type Column-to-Shaft Connection

Eq. 3.6.7.3.2-1

$$\frac{A_{sh}}{s_{max}} \geq \frac{k f_{ul} A_l}{2\pi f_{ytr} l_s}$$

Location

- A (k = 0.5)
- B (k = 1.0)
- C (k = 2.0)

where:

A_{sh} = area of lateral confinement steel—one leg of spiral or one leg of welded hoop (in.^{2})

s_{max} = spacing between lateral confinement steel (in.)

k = efficiency factor, taken as 1 over the upper half of the embedment length and 0.5 over the lower half.

f_{ul} = tensile stress of column longitudinal reinforcement (ksi)

A_l = total area of column longitudinal reinforcement (in.^{2})

f_{ytr} = yield stress of lateral or transverse reinforcement (ksi)

l_s = splice length of controlling bar (in.) taken as $1.7l_d$, where l_d is the tension development length of reinforcing steel as determined with the *AASHTO LRFD Bridge Design Specifications* except for SDCs C and D, where l_d shall be taken as the anchorage length of longitudinal reinforcing bars, l_{ac}, per the *AASHTO Guide Specifications for LRFD Seismic Bridge Design*

The Confinement of the over-strength plastic forces is critical. Equation 3.6.7.3.2-1 is set to apply throughout the transition zone, however, the “k” factor varies based on the location.

Location C is the first 1’-0” of reinforced confinement below the shaft concrete top cover. It has a factor of 2 in the equation to resist the strongest prying forces at the interface of the column and shaft.

Location B is the upper half of the transition zone, minus the first 1’-0” of reinforced confinement and shaft concrete top cover. It has a factor of 1 in the equation.

Location A is the lower half of the transition zone and has a factor of 0.5 in the equation.

Note that the splice length of the bar is determined from the appropriate code and then increased by a factor of 1.7.

3.6.7.3 Precast Concrete Column in Oversized CIP Concrete Shaft Socket Connection – Design Example

Reinforcement Layout and Properties

Column Rebar - (40) #11:

- d_{bl} = 1.41” — longitudinal bar diameter
- d_{bh} = 0.75” — transverse bar diameter
- A_{bl} = 1.56 in^2 — longitudinal bar area
- n_l = 40 — # longitudinal bars
- A_{st} = 62.4 in^2 — longitudinal steel area

Column Clear Cover:

- cvr_{typ} = 2” — typical clear cover in column
- cvr_{socket} = 1” — minimum column clear cover in socket section

Material Properties (Column & Shaft)

Concrete Properties:

- f'_c = 4 ksi — concrete compressive strength

Rebar Steel Properties (ASTM A615 Gr 60):

- f_y = 60 ksi — nominal yield strength
- f_{ye} = 68 ksi — expected yield strength
- $f_{yh} = f_{tr}$ = 60 ksi — transverse steel yield strength

We will now review and example of the design of this connection using the same parameters as the previous examples.

The reinforcement layout and properties are shown, using (40) #11 long. bars and #6 spirals in the column.

The clear cover is defined for column only.

The material properties with conventional concrete and A615 Gr 60 reinforcement for both column and shaft.

3.6.7.3 Precast Concrete Column in Oversized CIP Concrete Shaft Socket Connection – Design Example

Minimum Splice Length

Minimum Embedment Length

- $c = c_{shaft} + c_{column}$
  $= 4”$ — total bar end cover for column and shaft
- $e = 6”$ — largest center-to-center distance between column and shaft longitudinal bars (assumed)
- $l_{ac} = 37.9”$ — min. anchorage length per AASHTO SGS 8.8.4-1
- $l_s = 1.7 * l_{ac}$
  $= 64.4”$ — splice length of controlling bar
- $l_e = \max(D_c , l_s + e + c)$
  $= 74.4”$ — total embedment length of column in shaft

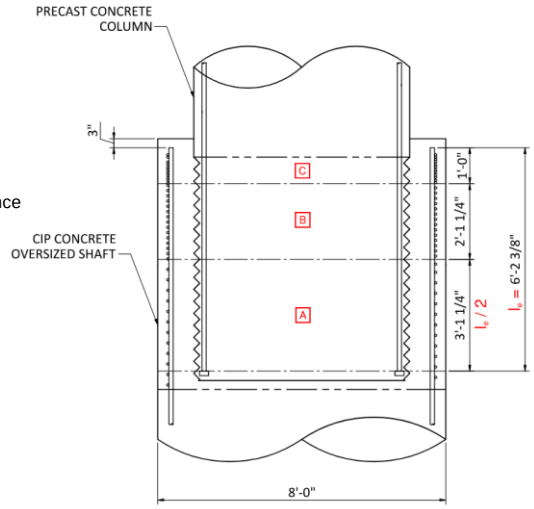

The first steps are to define the transition zone, which is based on:

1. The concrete cover
2. The eccentricity between the column and shaft, which is the maximum center-to-center distance allowed in the contract.
3. The minimum anchorage length (in this example is based on AASHTO Seismic Guide Specifications) and then increased by 1.7 factor as specified in the AASHTO Guide Specifications for ABC.

Based on these values, the designer can then determine the transition length, which in this case is 74.4 inches or 6’-2 3/8”.

3.6.7.3 Precast Concrete Column in Oversized CIP Concrete Shaft Socket Connection – Design Example

Minimum Spacing of Shaft Transverse Reinforcement

$$\frac{A_{sh}}{s_{max}} \geq \frac{k f_{ul} A_l}{2\pi f_{ytr} l_s} \qquad (3.6.7.3.2\text{-}1)$$

Region A (k = 0.5): **Using #6 spiral reinforcement: (A_{sh} = 0.44 in^2)**

$\frac{A_{sh}}{s_{max}} \geq$ 0.12 in^2/in → $s_{max} \leq$ 3.60" OK

s_{min} = 2.25"

Region B (k = 1.0):

$\frac{A_{sh}}{s_{max}} \geq$ 0.24 in^2/in → $s_{max} \leq$ 1.80" NG

s_{min} = 2.25"

Region C (k = 2.0):

$\frac{A_{sh}}{s_{max}} \geq$ 0.49 in^2/in → $s_{max} \leq$ 0.90" NG

s_{min} = 2.25"

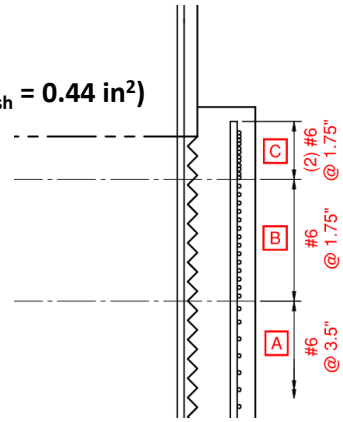

The next step is to determine the required confinement reinforcing steel in the three transition zones. For this example, we will start with conventional #6 spirals.

By applying the defined variables in equation 3.6.7.3.2-1, we see that Zone A is adequate with a spacing of 3.5 inches.

However, Zones B and C require too much steel and the over-congested area will not develop correctly. Therefore, this design fails and a re-design is required.

3.6.7.3 Precast Concrete Column in Oversized CIP Concrete Shaft Socket Connection – Design Example

Minimum Spacing of Shaft Transverse Reinforcement

$$\frac{A_{sh}}{s_{max}} \geq \frac{k f_{ul} A_l}{2\pi f_{ytr} l_s}$$

(3.6.7.3.2-1)

Try #9 spiral reinforcement:
(A_{sh} = 1.0 in²)

Region A (k = 0.5):

$\frac{A_{sh}}{s_{max}} \geq$ 0.12 in²/in → $s_{max} \leq$ 8.19" OK

s_{min} = 2.82"

Region B (k = 1.0):

$\frac{A_{sh}}{s_{max}} \geq$ 0.24 in²/in → $s_{max} \leq$ 4.09" OK

s_{min} = 2.82"

Region C (k = 2.0):

$\frac{A_{sh}}{s_{max}} \geq$ 0.49 in²/in → $s_{max} \leq$ 2.05" NG

s_{min} = 2.82"

If spiral reinforcement is doubled in Region C to maintain Region B spacing: $s_{max} \leq$ 4.09" OK

s_{min} = 3.99"

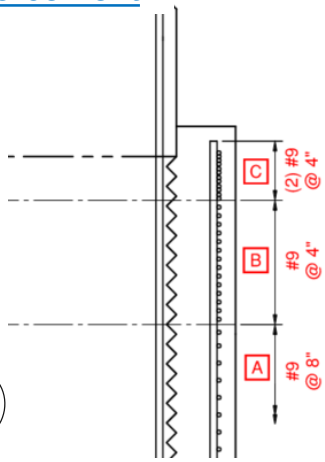

Now let's try #9 butt-welded hoops.

Zone A is still adequate with spacing of 8"

Zones B is adequate with spacing of 4"

However, Zone C still requires too close of a spacing between hoops. But, if we change to bundled butt-welded hoops, then we can make the limits work and our design is adequate. Note that the spacing still provides space for concrete placement with vibration.

If this still did not work, what are the designer's options?

1. Increase shaft diameter
2. Reduce column size and over-strength forces
3. Use permanent casing and account for casing (with the owner's approval)

3.6.7.4 Precast Concrete Column in Precast Pier Cap Socket Connection

Where a socket connection is used to connect a precast column to a receiving precast concrete pier cap, the following requirements shall apply. A precast socket and a precast pocket are similar and the Designer shall meet the design principles identified in Article 3.6.5.

The socket form shall be lock-seam corrugated steel pipe confirming to ASTM A760. The thickness of the corrugated steel pipe shall satisfy the provisions from Article 3.6.6.4.

Transverse reinforcement around the socket in the receiving pier cap shall be provided along the half of the depth that is adjacent to the interface with the column. The transverse reinforcement volumetric ratio shall be the same as that of the column transverse reinforcement.

The diameter of the socket vent at the top surface of the pier cap shall be greater than 4.0 in.

Bundling of longitudinal bars in the receiving element shall be allowed. The bent cap longitudinal bars shall be continuous over the bent length or shall be spliced. Reinforcement bundles and splices shall be in accordance with the *AASHTO LRFD Bridge Design Specifications*. No splices of the longitudinal bars shall be allowed within 1.0 times the column diameter, D_c, from the column center line.

The gap, G, between the socket in the pier cap and the inner surface of the corrugated steel pipe shall not be more than 3.0 inches.

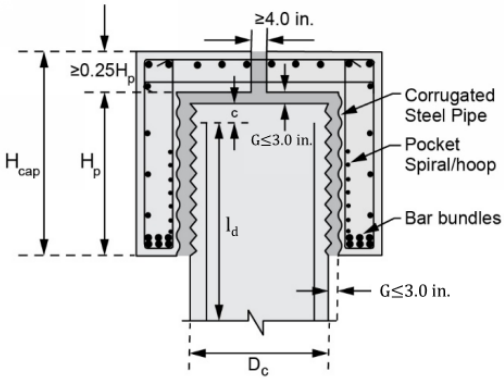

Figure C3.6.7.4.2-1—Details of Pier Cap with Socket

Article 3.6.7.4 of the Guide Specifications for ABC covers precast concrete column in precast pier cap socket connections. The pocket confining reinforcement, near the receiving end, has to equal the transverse volumetric ratio of the column. Note that a 4-inch vent is detailed at the top of the cap for proper grout placement and reduction in air pockets inside the socket connection.

The pier cap positive (bottom mat) reinforcement has to be bundled across this interface. These bars can be spliced, but not within a column diameter of the socket and standard practices should be designed for splices. We do not cover the precast pier cap design in significant detail, but care should be exercised here not to create a situation that inadequately capacity protects the plastic mechanism that is intended in the column.

3.6.7.4 Precast Concrete Column in Precast Pier Cap Socket Connection

The socket length, H_p, in the receiving pier cap shall satisfy:

$$H_p \geq max\begin{cases} D_c + G \\ l_d + c + G \end{cases} \quad (3.6.7.4.1\text{-}1)$$

where:

D_c = diameter of the column (in.)
c = column longitudinal reinforcement end cover (in.)
l_d = tension development length of reinforcing steel as determined with the *AASHTO LRFD Bridge Design Specifications* except for SDCs C and D where l_d shall be taken as the anchorage length of longitudinal reinforcing bars, l_{ac}, per the *AASHTO Guide Specifications for LRFD Seismic Bridge Design.*
G = gap between socket and column (in.)

Where a partial depth socket in a precast pier cap is used to receive a precast column, the depth of the receiving element shall not be less than 1.25 times the length of the socket H_p.

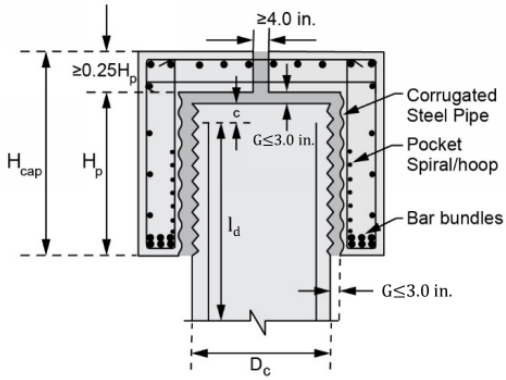

Figure C3.6.7.4.2-1—Details of Pier Cap with Socket

The specification includes provisions for the socket length (Hp) to receive the precast column. Also, the precast pier cap depth shall be 1.25 times the length of the socket; or in other words, the pier cap height above the socket has to be at least ¼ the length of the socket.

The grouted gap around the column has to be at least 3 inches wide. A corrugated steel pipe should be used for this purpose.

End of Module 9

Available Modules

Non-seismic

1. General Provisions and Common Connections
2. Substructure Design
3. Superstructure Design
4. Bridge Systems
5. Durability of ABC Designs
6. ABC Construction Specifications

Seismic

7. Introduction to ABC Seismic
8. Seismic Connection Design and Detailing
9. Seismic Pocket and Socket Connections
10. Seismic Integral Connections

This concludes module 9 of the ABC training.