Module 7: Introduction to ABC Seismic

This Part Covers:

- Seismic Analysis & Design Methods
- Load Path
- Seismic Systems, Elements, & Sub-Systems
- Energy Dissipation
- Capacity Protection

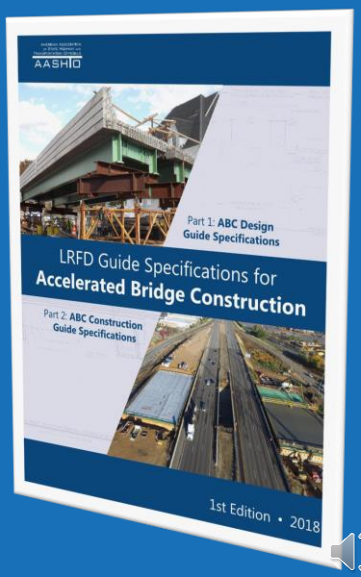

This module covers:

- Seismic Analysis & Design Methods

- Load Path

- Seismic Systems, Elements, & Sub-Systems

- Energy Dissipation

- Capacity Protection

3.4 Seismic Analysis & Design Methods for ABC

ABC seismic analogy: Baking a cake!

Option 1 – A known and trusted cake recipe; tastes good and you know the recipe.

Option 2 – Change ingredients to make it faster...but, did it ruin the cake?

ABC Seismic Analogy: Baking a cake!

Option 1 – Use a known and trusted cake recipe; makes a cake that taste good, you have liked it for years, and though you look at the instruction, mostly you already know the process and the cake turns out how you expect every time.

Option 2 – A pastry chief is inviting you to look at the ingredients to see how you can change the cake to make it better; in this case bake it faster. You can make the changes that accelerate the process, but you may ruin the cake if you don't make changes in away that are understood and still perform as they are supposed to.

3.4 Seismic Analysis & Design Methods for ABC

Conventional design and construction practices:

- Vetted - academic studies, research, testing, and development.
- Systematically implemented by state DOT's.

ABC research in seismic applications focuses on the "emulative" behavior of connections and details.

Ask, "*how does the performance of this design or detail emulate the behavior we know works in our bridges*?" If you don't know, seek guidance and help. Understand the process before you use it, or you can create a performance you did not expect!

Conventional design and construction practices have been vetted through years of academic studies, research, testing, and development. These practices have been systematically implemented by state DOTs to achieve the expected seismic performance and resilience of bridges.

ABC research in seismic applications has focused on not just the acceleration of construction, but the "emulative" behavior of connections and details. Throughout the use of these Guide Specifications, engineers should constantly be asking "how does the performance of this design or detail emulate the behavior we know works in our bridges?" If you don't know, seek guidance and help. This can be done by seeking out the research reports for each provision that is listed in the commentary of each provision.

You should understand the process before you use it, or you can create a performance you did not expect!

3.4 Seismic Analysis & Design Methods for ABC

Aims to ensure minimal damage of the structure under moderate earthquake and collapse prevention under the design earthquake.

Adopts a Type I design strategy exclusively (inelastic behavior under ductile limit state should occur only in the substructure).

Written to supplement (not to replace) the current specifications.

The seismic design for ABC aims to ensure minimal damage to the structure under a moderate earthquake and collapse prevention under the design earthquake.

ABC seismic design adopts a Type I design strategy exclusively. This means that inelastic behavior under a ductile limit state should occur only in the substructure.

The Guide Specifications for ABC are written to supplement (not to replace) the current specifications for seismic design.

3.4.1 Seismic Analysis & Design Methods for ABC

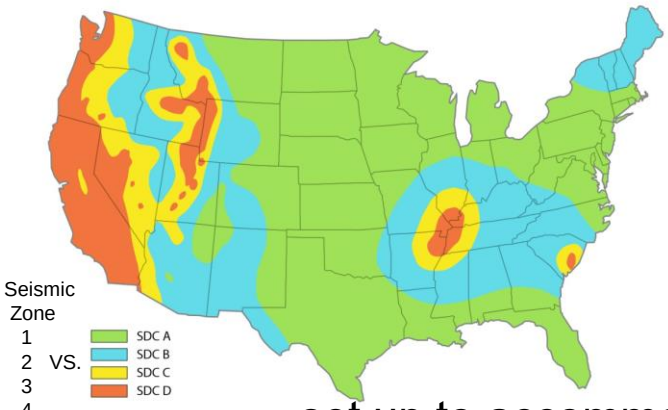

3.4.1.1—General

Seismic analysis and design of prefabricated elements shall be performed using either of the methods defined in Article 3.4.1.2 or Article 3.4.1.3. More refined methods of analysis and design may be used with the Owner's approval.

- Force-Based Design
AASHTO LRFD Bridge (2018)

- Displacement-Based Design
AASHTO Seismic GS (2011)

… set up to accommodate continuing research and advancements.

Article 3.4.1 of the Guide specifications covers seismic analysis and design methods for ABC.

The Guide Specifications can be used with either:

The AASHTO LRFD Bridge Design Specifications; a force-based approach to seismic design,

or the AASHTO Guide Specifications for LRFD Seismic Bridge Design; a displacement-based approach to seismic design.

Future editions of Guide Specifications for ABC are expected to incorporate ongoing ABC seismic research and advancements.

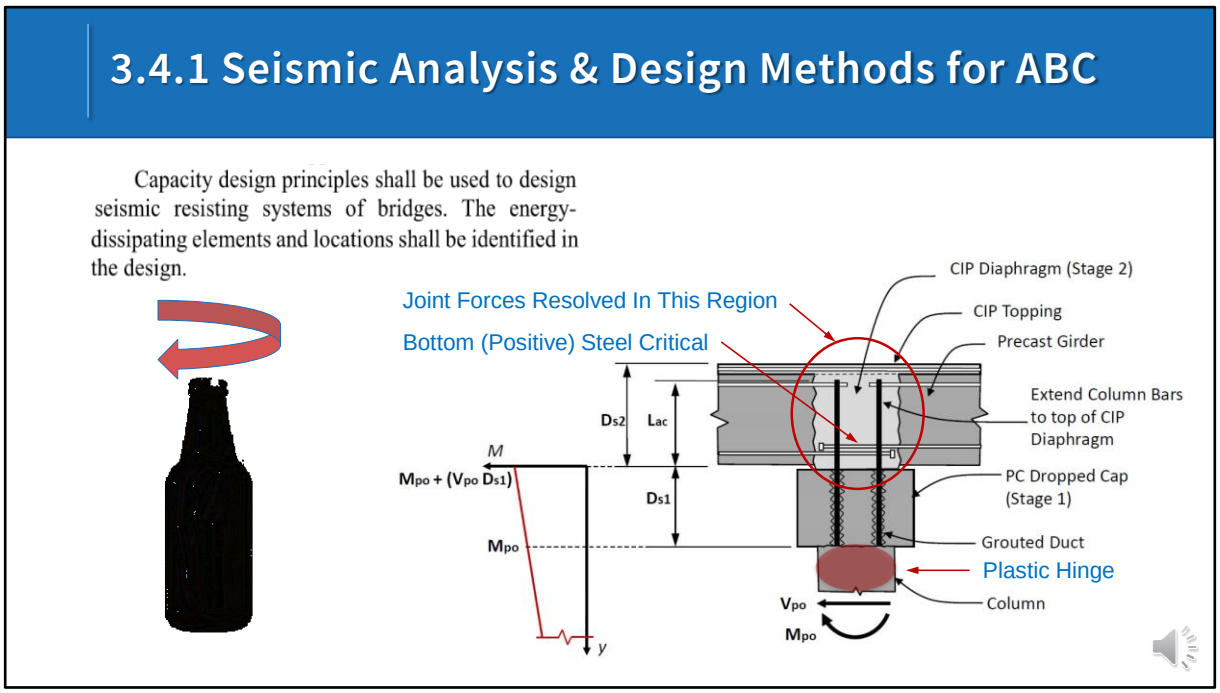

Article 3.4.1 goes on to state that: Capacity design principles shall be used to design seismic resisting systems of bridges. The energy-dissipating elements and locations shall be identified in the design.

A good analogy to this principle is to think of a seismic design as the glass bottle in your hand. Do you want to cap to unscrew first or the bottle to shatter?

To illustrate, let's look at a detail of a joint. You define the hinge and detail for the performance you want (in this case the top of the column) and then capacity protect the rest of the system. With ABC connections, the load path is followed and each connection has to be evaluated separately.

3.4.1 Seismic Analysis & Design Methods for ABC

Prefabricated elements and associated connections may be located where seismic inelastic energy dissipation and potential damage is anticipated under large earthquake shaking. If prefabricated elements are so located, then provision for acceptable displacement capacity of the element and connections shall be made. The maximum forces likely to be developed (overstrength plastic hinging moment and associated forces) shall be resisted by adjoining members in an essentially elastic manner. Inelastic cyclic displacement capacity of the element or connection would not be required of prefabricated elements or connections when located away from potential energy dissipating zones.

… ideal locations for ABC connections

In high seismic areas inelastic ductility is required; thus all members must have sufficient strength and ductility to form the intended structural plastic mechanism.

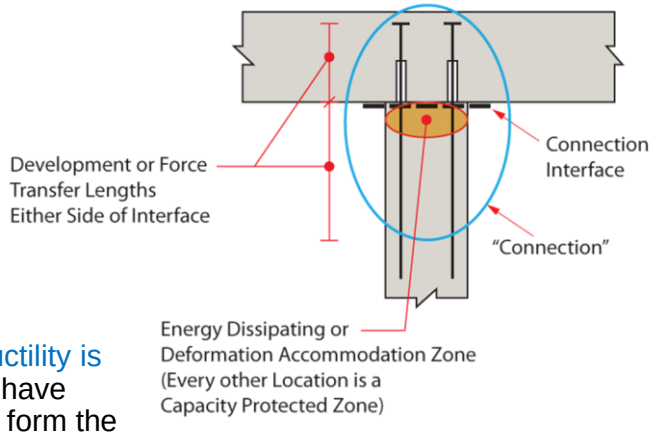

It does not matter which specification you use. Prefabricated elements and associated connections located where seismic inelastic energy dissipation and potential damage is anticipated under large earthquake shaking shall be designed and detailed with care!

For ABC, the ideal connection interface location to speed up construction practices is also located inside at the ideal location for energy dissipation and transfer lengths.

If prefabricated elements are so located, then inelastic ductility is required; thus all members must have sufficient strength and ductility to form the intended structural plastic mechanism.

3.4 Seismic Design for ABC Continued

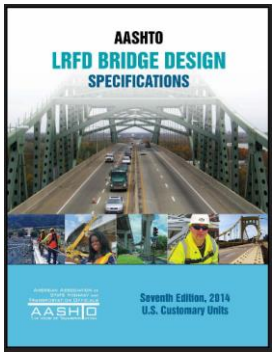

…Select a methodology and use it.

Do not mix and match!

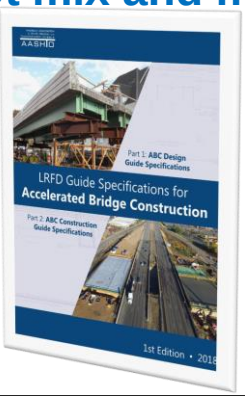

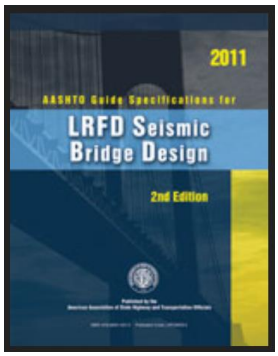

Please understand that the practices and principles in each specification are NOT compatible. Select a methodology and use it in conjunction with these Guide Specifications; DO NOT MIX & MATCH!

3.4.1.2 Force-based Design

3.4.1.2—Force-Based Design

Force-based design, if used, shall be used for the entire seismic design of the structure. Combinations of forced-based design and displacement-based design are not permitted.

Connections outside the plastic hinge zone shall be designed according to capacity protection principles as outlined in the AASHTO design specifications.

C3.4.1.2

The force-based seismic design methodology, as defined in *AASHTO LRFD Bridge Design Specifications*, is permitted when R-factors and prescriptive detailing for energy dissipating PBEs and their connections have been shown through laboratory testing to provide acceptable performance. This document limits the application of force-based design procedures for some prefabricated connections in Zones 2 through 4 when detailed understanding of material behaviors is necessary.

In force-based seismic design, the structure is designed for forces that are reduced below the elastic forces. The force reduction factors (R-factors) are justified by the occurrence of stable inelastic action in the specified plastic hinge zones, which is achieved through prescriptive detailing. If, in a precast seismic system, a connection is made in the plastic hinge zone, the hardware configuration may prevent the appropriate application of the prescriptive detailing required in the *AASHTO LRFD Bridge Design Specifications*. The Designer should then demonstrate that the connection can provide ductility capacity at least equal to that implied by the prescriptive detailing requirements.

AASHTO LRFD Bridge Design Specifications (2018)

The AASHTO LRFD Bridge Design Specifications are based on force-based seismic design, where the structure is designed for forces that are reduced below the elastic forces. The provisions for force-based design in the Guide Specifications for ABC are based on the 2018 version of the AASHTO LRFD Bridge Design Specification. The force reduction factors (R-factors) are justified by the occurrence of stable inelastic action in the specified plastic hinge zones, which is achieved through prescriptive detailing.

If a connection is made in the plastic zone, the configuration of the detailing may prevent the prescriptive detailing required in the AASHTO LRFD Bridge Design Specifications. The Designer should demonstrate that the connection can provide ductility capacity at least equal to that implied by the prescriptive detailing requirements.

3.4.1.3 Displacement-based Design

3.4.1.3—Displacement-Based Design

Displacement-based design, if used, shall be used for the entire seismic design of the structure. Combinations of forced-based design and displacement-based design are not permitted.

The displacement-based design methodology, as defined in *AASHTO Guide Specifications for LRFD Seismic Bridge Design*, shall be used to ensure proper performance of prefabricated elements and their connections in Seismic Design Categories (SDCs) A through D.

C3.4.1.3

The methodology identified in displacement-based design requires a detailed understanding of material behavior (and particularly deformation capacity) within the plastic hinge regions and allows the Designer to control the behavior through the design process. Elements of the specifications outlined in Article 3.4.1.3 go beyond those outlined in Article 3.4.1.2; specifically, using expected material properties for plastic hinge behavior and capacity protection in addition to calculating principal stresses and performing joint-shear design. Application of these concepts in design is critical to promote that connections of a prefabricated element perform within the expected behavior and can transfer loads as discussed in Articles 3.4.2, 3.4.3, and 3.4.4.

AASHTO Guide Specifications for LRFD Seismic Bridge Design (2011)

The AASHTO Guide Specifications for LRFD Seismic Bridge Design methodology requires a detailed understanding of material behavior (and particularly deformation capacity) within the plastic hinge region. This allows the Designer to control the behavior of the bridge during an earthquake via the design process.

This method tends to fit the goal of designing alternate connections for ABC, but the application of the concepts applied in the Guide Specifications for ABC is critical to developing details that perform within the expected behavior and can transfer the required loads.

3.4 Seismic Design for ABC Continued

1. Continuity of load path under load reversals
2. Development of cyclic inelastic deformations
3. Maximum forces (moments) occur where we would like to connect prefabricated elements
4. Certain element/material behaviors may cause rapid loss of cyclic resistance
   - Limitations of Rotation Capacity
   - Local Buckling
   - Strain Concentrations

… Detailing is important!

No matter which specification is used for design, the critical understanding of ABC application in high seismic regions includes:

1. Continuity of load path under load reversals
2. Development of cyclic inelastic deformations
3. The maximum forces (moments) occur where we would like to connect prefabricated elements
4. Certain element/material behaviors may cause rapid loss of cyclic resistance
   - Limitations of Rotation Capacity
   - Local Buckling
   - Strain Concentrations

… The key to a successful design is that detailing is important!

1.3.7 Miscellaneous Elements and Definitions

Load Path	A continuous path along which a load travels through structural elements and connections.
Seismic System	A series of connected elements that transfer seismic loads through the structure to the foundations.
Seismic Subsystem	A localized group of elements and connections within a seismic system that serves a specific design function, such as a knee-joint, plastic hinge region, etc.

Article 1.3.7 of the Guide Specifications for ABC includes definitions. The following definitions are important to seismic ABC design:

Load Path = A continuous path along which a load travels through structural elements and connections.

Seismic System = A series of connected elements that transfer seismic loads through the structure to the foundations.

Seismic Subsystem = A localized group of elements and connections within a seismic system that serves a specific design function, such as a knee-joint, plastic hinge region, etc.

The term “system” in these definitions should not be mixed with the term “Bridge System” previously discussed. These terms are commonly used in seismic design specifications, therefore they were kept in the Guide Specifications for ABC.

3.4.2 Load Path

3.4.2—LOAD PATH

A continuous load path shall exist between the source of the seismic loads and the foundation. The load path shall enable the transfer of forces between the elements and connections.

As described in the provisions, the Designer shall ensure there is a fully developed load path along the entire bridge seismic system.

The force-based design method identified in Article 3.4.1.2 requires no checks of displacement capacities. Force transfer along a defined load path shall be checked using principles of mechanics for each connection between prefabricated elements. Capacity protection of all elements in the load path is required.

Unless noted otherwise, force-based design may be used for all design covered by these guide specifications. Specific details and limits such as reduced R factors, as described herein, shall be used for each seismic system.

The displacement-based design method identified in Article 3.4.1.3 outlines specific procedures, including checks for displacement capacity and capacity projection, including member shear strength, joint shear stresses, and principal stresses, to verify satisfactory force transfer along a defined load path. These checks shall be made for each connection between prefabricated elements or connections between prefabricated elements and CIP elements.

C3.4.2

The load path is an essential concept for the design of a structure experiencing high seismic loading.

The *AASHTO LRFD Bridge Design Specifications* recommend that the Designer check displacements in a force based seismic design.

Reduced R-factors account for the decrease in displacement ductility associated with mechanical couplers placed within the plastic hinge region or adjoining members.

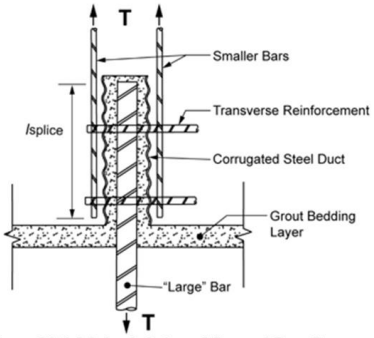

Figure C3.6.5.2-1 – Splicing of Grouted Duct Bars to Other Bars

Example Load Path Detail

Article 3.4.2 of the Guide Specifications for ABC covers the concept of load path. In ABC connections, we want to design and detail a connection that does not create a discontinuity or weakness.

The provision states:… the Designer shall ensure there is a fully developed load path along the entire bridge seismic system.

The image on the right is an example of load path in a connection detail. The force in the larger bar has to transfer through the grout, the corrugated steel duct, the concrete (confined by the transverse reinforcement), and into the smaller reinforcing bars. This provides a continuous load path from one element to the adjacent element.

3.4.3 Seismic Systems, Elements, & Sub-systems

3.4.3.1 Earthquake-Resisting Systems (ERS)

3.4.3.1—Earthquake-Resisting Systems (ERS)

Regardless of whether the forced-based design or the displacement based design methodology is used, the Earthquake-Resisting Systems (ERS) shall be identified.

The ERS shall provide a reliable and uninterrupted load path for transmitting seismically induced forces into the surrounding soil and sufficient means of energy dissipation and/or restraint to reliably control seismically induced deformations. For force-based design, a reliable load path may be achieved by meeting the code requirements for analysis and detailing. All bridge elements shall be capable of achieving anticipated deformations and displacements consistent with the requirements of the chosen seismic design methodology.

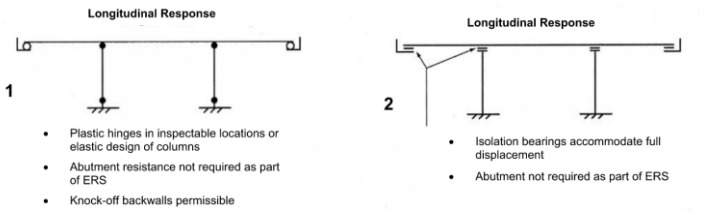

Figure 3.3-1a—Permissible Earthquake-Resisting Systems (ERSs)

Example from AASHTO LRFD GS for SBD

Regardless of whether the forced-based design or the displacement-based design methodology is used, the Earthquake-Resisting Systems (ERS) shall be identified.

The ERS shall provide a reliable and uninterrupted load path for transmitting seismically induced forces into the surrounding soil and sufficient means of energy dissipation and/or restraint to reliably control seismically induced deformations.

In general terms; identify the system (or method) that will resist the earthquake. Here are two examples from the AASHTO LRFD Guide Specifications for Seismic Bridge Design. The most commonly used ERS is plastic hinges located in inspectable locations. Another less common ERS is the use of isolation bearings to accommodate the full anticipated displacement.

3.4.3 Seismic Systems, Elements, & Sub-systems

3.4.3.2 Earthquake-Resisting Elements (ERE)

3.4.3.2—Earthquake-Resisting Elements (EREs)

Earthquake-Resisting Elements (EREs) of the bridge and connections between them shall be designed to resist the forces induced in the defined ERS to ensure the integrity of the structure under seismic loading. The ERE and the internal and adjacent connections that are covered by this guide specification are only permitted with the Owner's approval.

The nominal and expected properties of all materials used in or adjacent to the ERE shall be used in the design.

ABC connections integrated with defined EREs shall be evaluated with idealized elastoplastic behavior, emulative of cast-in-place reinforced concrete behavior, and shall have strength and ductility capable of meeting criteria identified herein, per *AASHTO Guide Specifications for LRFD Seismic Bridge Design* or as defined by the Owners. Seismic emulative design of precast concrete elements shall be consistent with the design of cast-in-place concrete, except as altered by this guide specification.

As described in Article 3.4.1, energy dissipating (ED) elements and capacity protected (CP) elements shall be designed with more rigorous inelastic cyclic displacement capacity required of ED elements, but not of CP elements. The Designer shall determine which type of element a precast bridge element (PBE) is and therefore how it must be designed. The Owner may limit the use of certain types of PBEs and their location within a bridge.

C3.4.3.2

EREs are defined further in the *AASHTO Guide Specifications for LRFD Seismic Bridge Design*.

It is essential that the location of prefabricated element connections be coordinated with the potential plastic hinge zones that are expected to develop within the ERS during seismic loading. Connections that are located away from plastic hinging zones are not expected to experience large inelastic strains so they may be designed to be acceptably strong to ensure elastic response under seismic loading. These connections, shown in Figure C3.4.3.2-1, are referred as "capacity protected" (CP) and those locations should never experience inelastic action because the plastic hinges act as fuses that limit the internal forces. Connections that are near or part of the plastic hinging regions are expected to experience inelastic action and therefore participate in the dissipation of earthquake-induced energy. These connections are called energy dissipating (ED) elements or connections, and are shown in Figure C3.4.3.2-1 (Marsh et al. 2013).

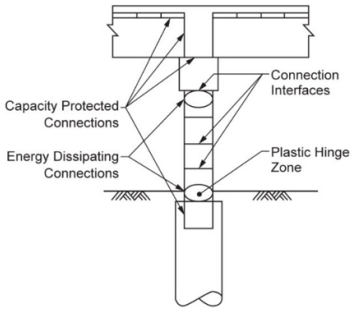

Figure C3.4.3.2-1 Schematic Locations of Connections Relative to Potential Plastic Hinge Zones.

Article 3.4.3.2 of the Guide Specifications for ABC include provisions for Earthquake Resisting Elements. The article states that Earthquake-Resisting Elements (EREs) of the bridge and connections between them shall be designed to resist the forces induced in the defined ERS to ensure the integrity of the structure under seismic loading.

In the image shown, the ERS is plastic hinges and the ERE is the column, specifically the design and detailing of the plastic hinge in the column.

The article states that: The ERE and the internal and adjacent connections that are covered by the Guide Specifications for ABC are only permitted with the Owner's approval.

The article also states that: ABC connections integrated with defined EREs shall be evaluated with idealized elastoplastic behavior, emulative of cast-in-place reinforced concrete behavior, and shall have strength and ductility capable of meeting criteria identified herein…

3.4.3 Seismic Systems, Elements, & Sub-systems

3.4.3.2 Earthquake-Resisting Elements (ERE)

Defining ERE w/ ABC

Determine what is different from CIP and make a plan for addressing it in the design.

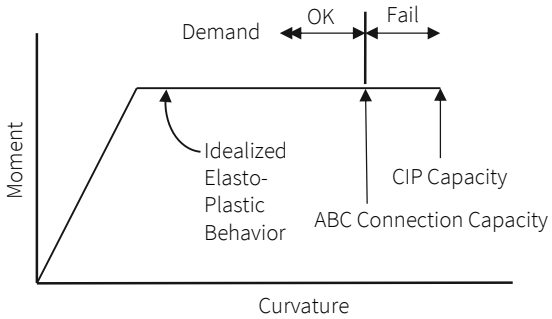

Figure C3.4.3.2-2—Schematic Loss of Displacement and Ductility of ABC Connections Relative to Conventional Cast-In-Place Concrete Plastic Hinge Zones

Precast elements located in the plastic hinge region may reduce the displacement capacity and rotational capacity (ductility) of the ERE and ERS depending on the connection chosen.

Designers should evaluate how the connection type differs from conventional CIP concrete connections and verify that these connections do not create an unintended loss of capacity. Figure C3.4.3.2-2 shows a representation of the loss of precast elements compared to conventional cast-in-place concrete connections. In some cases, the ABC connection may be slightly lower than the equivalent CIP connection, but it may still be adequate for the demand placed on it.

This may be acceptable, but again, only if the demand is less than the capacity of the ABC connection. This slight reduction in capacity when compared to CIP construction is the basis for the requirement to get owner approval before using any ABC connections in seismic applications.

3.4.3 Seismic Systems, Elements, & Sub-systems

3.4.3.3 Earthquake-Resisting Sub-Systems (ERSS)

3.4.3.3—Earthquake-Resisting Sub-Systems (ERSS)

The ERSS shall be designed to transfer the forces identified in Article 3.4.4 into adjacent elements.

C3.4.3.3

The use of prefabricated energy dissipating EREs together with energy dissipating connections and materials, are termed an Earthquake-Resisting Subsystem (ERSS) when energy dissipating and/or capacity protected components are combined to create a load path through a prefabricated region of the bridge.

Elements may be connected off site and then installed in the bridge as a prefabricated seismic subsystem for constructability reasons. Then the load paths and force transfers should be checked both within the ERSS and from the ERSS to surrounding elements. ABC promotes prefabricated elements and/or pre-assembled components that can have an ERS. These items need to be evaluated as an ERSS that functions within the larger ERS for the bridge.

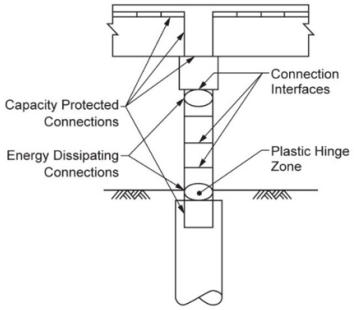

Figure C3.4.3.2-1 Schematic Locations of Connections Relative to Potential Plastic Hinge Zones.

Article 3.4.3.3 of the Guide Specifications for ABC covers the concept of Earthquake Resisting Sub-Systems or ERSS.

In a conventional reinforced concrete column that is detailed to produce inelastic behavior in plastic hinges, the concrete, longitudinal (flexural) reinforcement, and transverse (confinement) reinforcement act as the energy dissipating system in the ERE (Column). Introducing an ABC element and a connection detail in this plastic hinge region creates a new Earthquake-Resisting Sub-System in the detail of that connection.

Elements may be connected off-site and then installed in the bridge as a prefabricated seismic subsystem for constructability reasons. Then the load paths and force transfers should be checked both within the Earthquake-Resisting Sub-System and from the Earthquake-Resisting Sub-System to surrounding elements. ABC promotes prefabricated elements and/or pre-assembled components that can have an Earthquake Resisting System. The performance of these items need to be evaluated for each Earthquake-Resisting Sub-System that functions within the larger Earthquake Resisting System for the bridge.

3.4.4 Energy Dissipation (ED)

The capacity protection design checks shall include but not be limited to:

- Member internal forces,
- Moment,
- Axial force,
- Shear and torsion,
- Principal joint stresses,
- Development and continuity of reinforcement,
- Seismic system and element stability,
- Other design considerations.

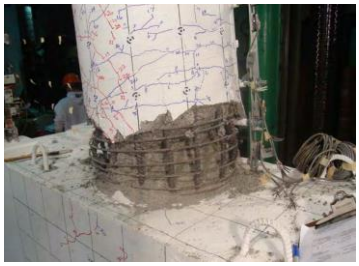

Source: Pang (2008)

Owner specific criteria should define the use of manufactured devices, components, or materials used in capacity protected elements.

Article 3.4.4 of the Guide Specifications for ABC include provisions for energy dissipation design. Prefabricated elements that are designed to undergo inelastic deformations (generally the plastic hinge regions) constitute the energy-dissipating ERE. Such elements shall be able to deform sufficiently to accommodate the displacement demands expected of the structure while resisting the applied forces.

When following the principles of capacity design, the maximum overstrength forces that these energy dissipating elements can generate when the structure develops a full plastic mechanism are used to define the forces in the capacity protected elements. All capacity-protected elements shall be able to develop the full overstrength design forces from energy-dissipating ERE. The capacity-protected elements do not need to have significant inelastic cyclic deformation capacity when compared to the energy dissipating elements.

The capacity protection design checks include but are not limited to:

- Member internal forces,
- Moment,
- Axial force,
- Shear and torsion,
- Principal joint stresses,
- Development and continuity of reinforcement,
- Seismic system and element stability,
- Other design considerations.

Owner-specific criteria should define the use of manufactured devices, components, or materials

used in capacity protected elements. The Designer shall use the strengths as defined by the manufacturer of the devices, components, and materials when verifying the capacity of the ERE, ERSS, and ERS.

End of Module 7

Available Modules

Non-seismic

1. General Provisions and Common Connections
2. Substructure Design
3. Superstructure Design
4. Bridge Systems
5. Durability of ABC Designs
6. ABC Construction Specifications

Seismic

7. Introduction to ABC Seismic
8. Seismic Connection Design and Detailing
9. Seismic Pocket and Socket Connections
10. Seismic Integral Connections