Module 5: Durability of ABC Designs

This module covers:

- Lessons learned on durability
- Detailing, and Construction for Durability

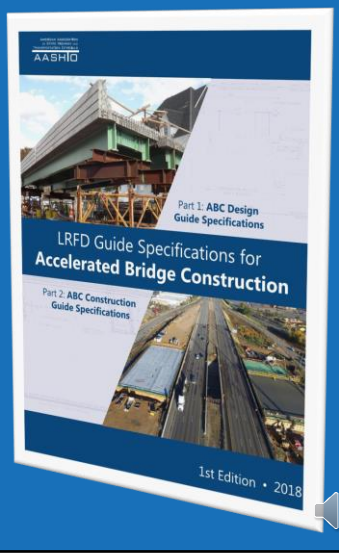

This module covers durability of ABC designs

The durability of ABC has always been a concern of designers and owners. This module will explore the durability performance of common ABC details.

We will also investigate ways to detail bridges and specify materials to provide a durable and long-lasting structure.

Why is long-term durability important in ABC?

There is a reason that we use ABC

- High traffic volume
- Impacts to the travel time
- Safety of workers and travelers

•So why should we sacrifice durability?

- We don't want to come back in ten years to do it again
- Impacts to travelers will most likely not reduce over time

2

Durability is an important aspect of any design. One could argue that it's even more important with ABC due to the reasons why we select ABC as a construction method.

ABC is typically used for bridges with high traffic volumes or bridges that would have severe impacts to travel if they were closed. ABC also reduces worker exposure to work zones, which improves safety. These factors stress the importance of maintaining a bridge in good condition for the future.

So we ask the question: Why should we sacrifice durability for speed?

The answer is quite simple: we shouldn't. It does not help if we can build the bridge quickly if we have to come back in 10 years and build it quickly again. The reasons for ABC will likely not change as time goes by, in fact the needs will most likely increase over time.

Durability has been the key from the beginning

AASHTO Technology Implementation Group (TIG)

- Established in 2001
- The start of the development of ABC in the US
- Mantra: Get In, Get Out, and Stay Out

Get in and Get Out

- Accelerated Construction
- Reduce impacts

Stay out

- Use high quality prefabrication to extend service life
- Durability is the key

3

In the early days of ABC implementation, AASHTO formed a group called the Technology Implementation Group.

The mantra for this group was “Get in, Get out, and Stay out “. “Get in and get out” clearly indicates the need for accelerated construction. The “stay out” refers to designing a bridge of high quality that will last a long time.

The durability of design details and materials is the key to this goal.

What have we focused on since 2001?

Major focus on speed

- Weekend construction
- Overnight construction
- What about durability?
- Yes and no

In this part, we will look at the history of durability of ABC and how we move forward

- Review of in-service performance
- New specifications for durability
- Recommendations to improve durability

4

Since 2001, the major focus has been on speed. We have developed ways to build bridges in weekends and sometimes overnight.

We must question if we have delivered on the durability aspect of the original AASHTO Group. For the most part the answer to this is yes, but we can do better.

In this part of the workshop we will look at the history of durability for bridges built with ABC. We will then review provisions in the guide specification that apply to durability. We will also review recommendations to improve durability of ABC projects.

Utah DOT Lessons Learned

Instituted in 2009

- Goal:
  - To study the performance of common ABC Details and methods
- Repeated on regular intervals to track long-term performance
  - 2009, 2010, 2011, 2013, 2016, 2019
- Approximately 45 bridges have been studied

5

The Utah DOT has built a large number of bridges using ABC. In 2009, The Utah DOT instituted a program of lessons learned bridge inspections. The goal was to track the performance of these bridges over time.

There have been six rounds of inspections over the last 10 years. the study group consists of approximately 45 bridges.

Utah DOT Lessons Learned

ABC Technologies Studied

- SPMT systems
- Lateral slide systems
- Precast concrete decks with various connections
  - Welded tab connections
  - Longitudinal post-tensioning
  - UHPC
- Substructures
  - Piers
  - Abutments (integral and cantilever)

6

The bridges include a variety of ABC technologies including:

1. SPMT Systems,
2. Lateral Slide Systems,
3. Precast concrete full-depth deck panels with various connections including welded tab connections, longitudinal post-tensioning, and UHPC,
4. and Precast Substructures

Utah DOT Lessons Learned

Overview of finding

- Some details did not function well
  - UDOT was flying without a parachute
  - They developed many details based on engineering judgment
  - There were no design specifications available
- Many are fairing very well
- Other issues were uncovered that are not related to ABC
  - Overlays and waterproofing
  - Approach slabs
  - CIP concrete
  - We need to be careful to separate out these issues from ABC Durability

7

An overview of the findings showed that some details did not function well. These are older details that were developed prior to any specifications on the design of ABC bridges.

Tye study also found that many details are working very well.

Many of the bridges had other issues that were uncovered, however, they were not necessarily related to ABC. This included overlays and waterproofing, approach slabs and joints, and cracking in cast-in-place concrete.

It is important to separate out non-ABC issues when evaluating the overall performance of ABC.

In the following slides, we will go through some of the major findings of this long-term study.

Utah DOT Lessons Learned

Precast Full Depth Deck Panels – Welded Tie Connections

Conclusions:

1. Leakage through these connections is widespread
2. Caused by flexure (two-way slab action)
3. Waterproofing system is inadequate
4. Estimated Service life: 20 years

Recommendations:

1. Do not use this detail
2. Investigate better waterproofing systems

Red = ABC Related

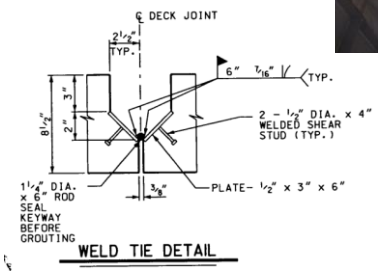

Some of the early bridge is built with full depth deck panels in Utah included a connection detail that involved a welded tie combined with a shear key. This is a detail that is similar to connections used in precast parking structures. It was never intended for heavy truck traffic.

The performance of this connection has been poor. Leakage at the joints and cracking is widespread.

It is recommended that this type of detail not be used in the future. The Guide Specifications for ABC cover this by requiring that deck level connections be moment connections.

Utah DOT Lessons Learned

Precast Full Depth Deck Panels - Longitudinal Post-tensioning Connections

Conclusions:

1. Excellent Performance
2. Very minor leakage in a few joints
3. Estimated Service life: 75 years

Recommendations:

1. Good high-performance details
2. Design according to AASHTO LRFD
3. Improve performance by preparing joints using exposed aggregate

Utah has a number of bridges with precast full-depth deck panels that have longitudinal post-tensioned connections. All of these bridges are performing very well, with virtually no issues.

These connections are included in the Guide Specifications for ABC for this reason.

Utah DOT Lessons Learned

Precast Full Depth Deck Panels - Shear Connector Pockets

Conclusions:

1. Excellent Performance
2. Very minor leakage through a few pockets
3. Shrinkage of grout was noted on one inspection of a bridge during construction
4. Interface connection is good
5. Estimated Service life: 75 years

Recommendations:

1. Good high-performance details
2. Improve the quality of grout materials
3. Improve the waterproofing system

Red = ABC Related

Many of the bridges in Utah have pockets for shear connectors. There were a few bridges that experienced minor leakage through these pockets. One bridge was inspected during construction, and minor shrinkage was noted in the shear connector pockets leading to cracks.

This is an ABC related issue in that the quality of the grout was not adequate, having excessive shrinkage. The Guide Specifications for ABC include construction performance specifications for grouts, to mitigate this potential issue.

Utah DOT Lessons Learned

Precast Full Depth Deck Panels - Reinforced Closure Joints

Several bridges in Utah have reinforced concrete closure joints. These were found to be functioning well, with no notable issues.

Utah DOT Lessons Learned

Other concrete closure Joints: Some good, some bad

12

Some of the bridges in Utah with reinforced concrete closure joints have experienced unacceptabletransverse cracking. In some cases, cracks are spaced two to three feet on center. Others are performing well.

Utah DOT Lessons Learned

Reinforced Concrete closure Joints with Cracks

Conclusions:

1. Performance is not consistent
2. Some structure have significant cracking
3. Shrinkage of concrete is the cause
4. Mix issues? Placement Issues?
5. Waterproofing would extend service life
6. Estimated Service life: 50 years

Recommendations:

1. Improve the quality of concretes
2. Improve the placement methods and curing
3. Improve the waterproofing system

Red = ABC Related

13

The conclusion of the study was that the cracking was caused by shrinkage stresses during curing of the confined closure joint concrete. The key to eliminating or minimizing these cracks is to better control the shrinkage of the concrete mix. Improving methods of curing can also help to prevent this from occurring.

The Guide Specifications for ABC include performance construction specifications for high-early strength concrete for closure joints to mitigate this issue.

Utah DOT Lessons Learned

Precast Full Depth Deck Panels - UHPC Closure Joints

No change noted in 2019 Inspection

14

One bridge was inspected that was built with reinforced concrete closure joints made with UHPC. This bridge is performing very well after four years in service.

Utah DOT Lessons Learned

SPMT Systems

Conventional Construction SPMT Bridge

Conclusions:

1. Cracking is a function of concrete mix, not the SPMT method
2. There was excessive cracking in parapets due to the large cantilevers during the move.
3. Estimated Service Life: Similar to CIP
4. Waterproofing system is inadequate

Recommendations:

1. Improve concrete mix to reduce shrinkage
2. Pick points should be located no more than 15% from ends
3. Investigate better waterproofing systems

Red = ABC Related

15

A significant number of bridges built with SPMTs were studied. Significant cracking was found in a number of the decks of the bridges. At first, this was thought to be a result of stresses during the bridge move. Upon further investigation, this was proven to not be the primary cause of the cracking.

The photo on the left shows side-by-side bridges. The structure on the left was built with conventional construction methods. The structure on the right was installed using SPMTs. Cracking in both bridges is significant, and even a little worse on the conventional construction bridge. Excessive cracking was found in the bridge parapets, especially near the pick points. It should be noted that these bridges were moved with long cantilevers, some in excess of 30% of the span length.

The conclusion was that the cracking was primarily related to the shrinkage of the concrete used in Utah for decks. This is an example of a problem that is more related to local materials than ABC.

The cracking in the parapets can be controlled by limiting the length of the cantilevers. The Guide Specifications for ABC covers this issue by requiring a serviceability check for the deck and parapet reinforcing during the bridge move.

Utah DOT Lessons Learned

Lateral slide systems

Conclusions:

1. So significant issues with deck cracking
2. No cracking in parapets
3. Minor cracking in some end diaphragms (concrete issue)
4. Some issues with cracking of keeper blocks related to inadequate thermal movement accommodation
5. Estimated Service Life: 75 years

Recommendations:

1. Continue to use this method
2. The UDOT details for end diaphragms are very versatile and can accommodate different mechanical slide mechanisms

16

A number of bridges built with lateral slide systems have been inspected. There were no notable issues identified with any of the bridges.

Utah DOT Lessons Learned

Precast Piers

- Not common in Utah: Several have been built
- All performing well

Precast piers were reviewed as well. There were no issues found with any of the piers.

Utah DOT Lessons Learned

Precast Abutments – Integral

- A few have been built
- Other states have more (IA, MA)
- All performing well

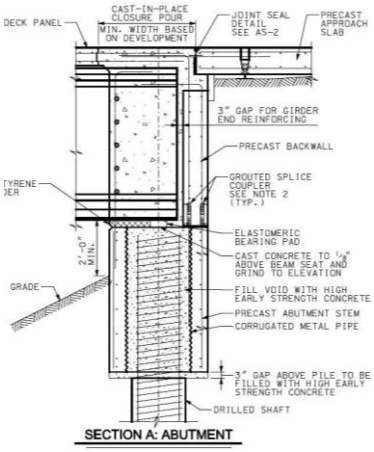

Several precast integral abutments were built. No issues were found with the performance.

Utah DOT Lessons Learned

Precast Abutments – Cantilever

- A few have been built
- Other states have more (IA, MA)
- All performing well

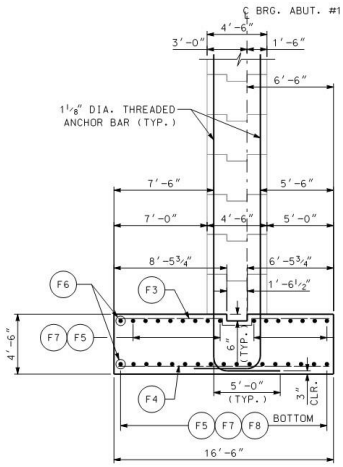

One very large cantilever abutment was investigated. There were no issues noted with the structure either.

Utah DOT Lessons Learned

Precast approach slabs

- There have been significant issues with approach slabs
  - Not all related to ABC
  - Issues with installation based on Utah specs
  - Time issues for lateral slide projects (under 24 hours)

A number of issues were found with precast concrete approach slabs in Utah. The issues are primarily on the joints at the end of the slabs. The inspection team noted that similar issues occur with approach slabs built using conventional methods.

This appears to be more of a problem with approach slabs in general.

Utah has had some problems with the installation of precast approach slabs with regard to construction speed. Some project specifications have required uniform bearing under the slabs, which was difficult to achieve quickly. For this reason, Utah has required approach slabs to be slid into position with the superstructure for lateral slide projects. This has improved the situation but added cost to the projects.

On the following slides, we will look at what other regions are doing to resolve this issue.

Some detailing recommendations

The Guide Specifications for ABC are not a detailing manual

There are sources for details

- Utah DOT Bridge Manual
- MassDOT: Developing ABC details
- PCI Northeast Bridge Technical Committee: www.pcine.org
  - Deck panels
  - Substructures & approach slabs
  - NEXT beams

The following slides will include recommendations for detailing for ABC projects. Specific details are not included in the Guide Specifications for ABC, since it is not a detailing manual. There are resources in the industry for good ABC details.

The Utah DOT bridge manual includes details for different types of ABC projects.

The Massachusetts DOT has some details for ABC and is currently developing more details for ABC.

The PCI Northeast Bridge Technical Committee has developed a number of guide details for ABC. These include:

1. Full-depth precast concrete deck panels,
2. Precast substructure elements and approach slabs,
3. and Prestressed concrete deck double tees called NEXT Beams.

These details can be found at: www.pcine.org

Approach Slab Details

Precast Approach Slabs

- Recommended details
  - PCI Northeast Bridge Tech Committee

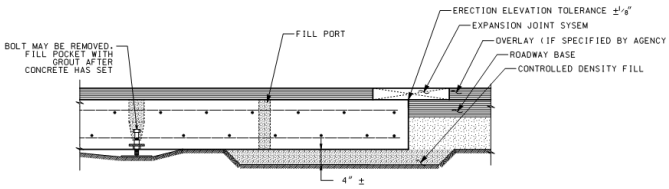

⑤ TYPICAL SECTION: APPROACH SLAB END WITHOUT SLEEPER SLAB

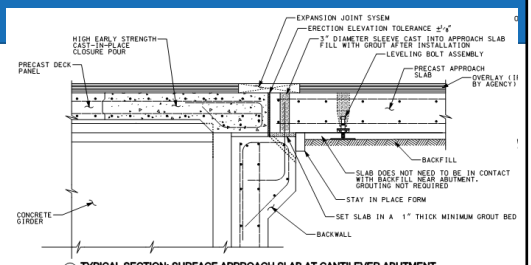

② TYPICAL SECTION: SURFACE APPROACH SLAB AT CANTILEVER ABUTMENT

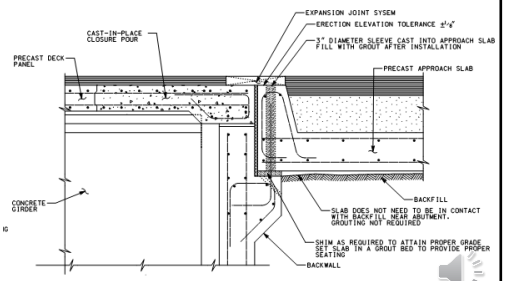

③ TYPICAL SECTION: SUB-SURFACE APPROACH SLAB AT CANTILEVER ABUTMENT

NOTE: CONCRETE GIRDER SHOWN STEEL BEAM SIMILAR.

The PCI Northeast group has developed details for precast approach slabs. To address the issues found in Utah, these details recommend the use of flowable fill under the slabs to properly seat them. This method of installation has proven successful on a number of projects.

Another detail used in the northeast is shown on the lower right involves setting the approach slabs below the subbase of the roadway pavement. This approach allows for larger elevation setting tolerances for the slabs, which can expedite the installation.

What have we learned?

Materials

- We need better grouts
- We need better closure joint concrete
- UHPC appears to be a very good material

Details

- Surface prep for joints can be improved
- PT deck panels perform very well
- Lateral slide bridges perform very well

The question that needs to be addressed is: What have we learned from the Utah DOT lessons learned inspections?

First, we have learned that we need better materials, including grouts and closure joint concrete. UHPC appears to be an excellent material for connecting precast elements.

We also learned that proper detailing can lead to better performance. FHWA has studied leakage through joints in precast decks. They have found that proper surface preparation of joints can improve performance.

We have learned that lateral slide bridges perform very well.

How does the GS address these?

Grout: Performance specification

Closure joint concrete: Performance Specification

UHPC: Performance Specification

Details

- Surface prep for joints: Exposed aggregate surface
- SPMTs: Support for bridge during casting recommendations

So how does the guide specification address these durability issues?

The specification includes performance construction specifications for grout, high-early strength concrete for closure joints, and UHPC. We will review these provisions in the upcoming slides.

The Guide Specifications for ABC also include recommendations for surface preparation of closure joints. An exposed-aggregate surface is recommended.

As previously discussed in this workshop, the Guide Specifications for ABC include recommendations for SPMT systems including serviceability design checks and recommendations on the support of the bridge during deck casting and transport.

Detailing, and Construction for Durability

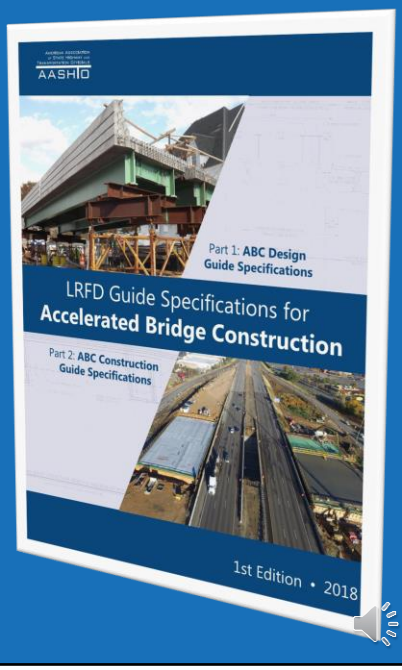

Will now cover the provisions in the Guide Specifications for ABC related to design, detailing, and construction for durability.

Section 4 – Detailing Requirements

Designer Responsibilities

- Permanent construction
- Specifying and detailing tolerances
- Overall approach

Contractor Responsibilities

- Temporary works
- Assembly planning

Section 4 of the Guide Specifications for ABC covers Detailing Requirements for ABC projects.

As previously discussed, the Guide Specifications for ABC include recommendations for division of responsibilities for detailing on ABC bridges.

In general, the designer is responsible for the detailing of all permanent construction. Schematic sketches of temporary works are also typically shown to establish the intent of the construction.

The contractor's responsibility is for the design and detailing of all temporary works. In the upcoming slides, we will explore the concept of assembly planning, which is also the responsibility of the contractor.

The designer can include in the plans, a schematic of the assumed construction sequence considered in the design. The contractor should be allowed to deviate from the sequence upon submittal of an assembly plan to the engineer for approval.

Prefabricated Elements

4.4—PREFABRICATED ELEMENTS

The following are the typical details that shall be included in project plans:

1. Plan view(s) of the structure showing the horizontal geometry and layout of the elements and features.
2. Elevation view showing the vertical geometry.
3. The location of all joints and closure pours shall be shown on the applicable details.
4. Details of elements including typical sections showing dimensions and the required reinforcement (concrete elements).
5. Concrete reinforcing bar bend diagrams and tables for elements (if required by an agency for conventional construction).

C4.4

There is no specific way to detail a prefabricated bridge. The recommendations herein are based on past successful projects. Detailing practices vary from agency to agency, therefore minor adjustment to these recommendations would be in order. For example, some agencies do not detail reinforcing bar bend diagrams on contract drawings. This work is left to the fabricator. In this case, the bar bend diagrams need not be included in the plans.

Prefabrication does not relieve the Designer of the responsibility to design all of the prefabricated elements in the bridge. Portions of the vertical construction industry schematically detail structures and leave the final design up to the fabricator. This is not the case in the prefabricated bridge construction industry. See Section 3 for more information on the design of prefabricated elements.

Layout and elevation details may be based on center of joint spacing. The actual length of each element need not be detailed provided that the project plans include details for joints. In this case, the fabricator can develop individual element shop drawings based on the joint layout details and the joint details.

Article 4.4 of the Guide Specifications for ABC includes provisions for recommended minimum detail requirements for projects with prefabricated elements.

The designer still needs to design the elements and show the required reinforcing or steel plate sizes. We have seen contract plans that do not show internal reinforcing in prefabricated elements. In this situation, the designer required the contractor to design the elements. This approach is not recommended. It places undue risk on the contractor, especially during the bidding phase for the project. This can lead to increased project costs.

Prefabricated Elements

4.4.1—LAYOUT AND WORKING LINES

All layout details shall be based on working lines, working points, or grid coordinates.

Working lines may be shown on the plans or specified to be determined by the Contractor and shown on the erection plans for the elements.

C4.4.1

This approach is common practice for most agencies, therefore normal detailing protocol should suffice.

Working points or working lines need not be based on a specific element in the bridge. They are often offset from the structure. Historically, this approach has been used in the building industry through the use of batter boards and string lines. Modern construction methods employ sophisticated survey methods to accurately define locations of working lines and points.

Article 4.4.1 of the Guide Specifications for ABC includes provisions for layout and working lines.

It is imperative that the layout of prefabricated elements be based on working lines, working points, or grid coordinates. This will be helpful in the development of geometry control plans and tolerance plans.

Prefabricated Elements

4.4.2—ELEMENT AND ERECTION TOLERANCES

The Designer shall evaluate and provide a viable means for the erection of prefabricated elements. The Designer should develop schematic erection plans for large elements and very complex bridge sites. The plans should include preliminary layout of cranes and delivery vehicles. The erection plans should be consistent with the specified traffic management approach.

The Designer shall specify both element tolerances and erection tolerances on the plans or in the specification. Element tolerances shall be shown graphically using schematic element drawings. Erection tolerances shall be shown on plan or elevation details.

C4.4.2

Erection plans are not required for all projects. Projects with smaller elements and significant work areas need not include erection plans. Schematic erection plans are recommended for sites where work areas are small and element weights are large. The Designer should investigate the approximate size of cranes required to erect the prefabricated elements to ensure that the bridge can be built within the available right-of-way.

The Designer should be responsible for establishing and specifying tolerances. The values for element tolerances and erection tolerances have an impact on the required width of joints in the structure. Large tolerances will require large joints in order to ensure that the elements will fit together. The *Guidelines for Prefabricated Bridge Elements and Systems Tolerances* (2017) contain recommended element tolerance details and values, and recommended element erection details and values. This document also contains more information on determining and specifying tolerances.

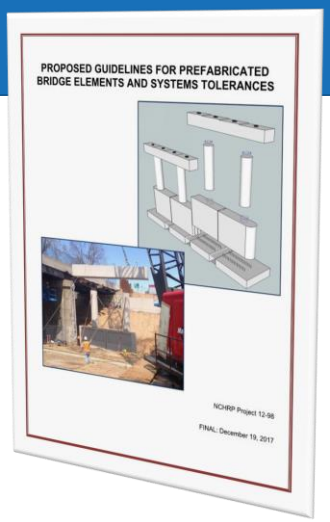

Article 4.4.2 of the Guide Specifications for ABC recommends that the designer evaluate and show a viable means of erection of the prefabricated elements. These plans are typically shown schematically. The designer should check for the locations of cranes, and verify that a reasonable crane can lift the elements. The designer should also check for access for the delivery of elements.

This article also recommends that the designer specify both element tolerances and erection tolerances on the plans. The guideline developed under NCHRP Project 12-98 is an excellent resource for this process. The guideline includes recommended tolerances for all aspects of prefabricated bridge construction. It is available for free at the project website. Simply search “NCHRP Project 12-98” to download the document.

Prefabricated Elements

4.4.3—JOINT WIDTHS

The specified width of joints between elements shall be based on the specified element tolerances, erection tolerances, and the specified materials that are to be used within the joint.

Reinforced closure joints shall be sized to accommodate the required lap lengths of the reinforcement as well as element and erection tolerances.

The materials used to fill a joint shall be considered for narrow joint openings. The recommended minimum joint width for concrete filled joints shall be set to 1.5 times the size of the maximum aggregate size in the concrete. The recommended minimum joint width for UHPC-filled joints shall be set to 1.5 times the length of the longest steel fiber used in the mix.

C4.4.3

The *Guidelines for Prefabricated Bridge Elements and Systems Tolerances* (2017) contain recommended approaches to determining and specifying joint tolerances. The minimum width of joints should account for the materials that are specified to fill the joints. For example, a joint that is to be filled with concrete should have adequate width to accommodate the size of the specified aggregate.

The most common steel fiber deployed in UHPC applications is a 0.008-inch by 0.5-inch long straight fiber. Using joints that are narrower than the specified value can result in parallel orientation of the steel fibers, which can affect the performance of the UHPC.

T = RECOMMENDED TOLERANCE = 0.5"
W2 = SPECIFIED JOINT WIDTH, MINIMUM=L2+T+1.5
P2 = BAR PROJECTION FROM PANEL EDGE = 0.5(W2+L2)+T
L2 = AASHTO LRFD GUIDE SPEC FOR ABC UHPC SPLICE LENGTH

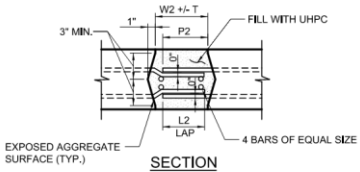

SECTION

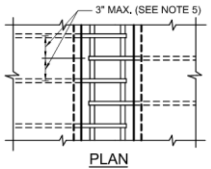

PLAN

STRAIGHT BARS WITH UHPC

Go to: www.pcine.org for latest details

Article 4.4.3 of the Guide Specifications for ABC include provisions for specifying the width of joints between elements. The required width of joints is a function of both the element tolerances and the erection tolerances. The width of the joint is used to accommodate these tolerances.

Fortunately, the guideline developed under NCHRP Project 12-98 covers the specification of joint widths based on the probability of occurrence of each tolerance at the joints.

The detail to the right shows a deck-level connection that was developed by the PCI Northeast Bridge Technical Committee. This detail includes recommendations for how to incorporate tolerances into the joint details. The tolerances affect both the width of the joint and the length of the bar extensions from each element. Equations are included in these guide details for designers to specify joint widths based on the desired tolerances.

Materials for ABC

4.4.4—MATERIALS

The Designer shall specify all materials that are required for the bridge including joint materials. The Designer shall also specify coatings of materials.

Concrete materials for prefabricated elements may be specified in two ways:

1. Prescriptive specifications using standard agency mix designs.
2. Performance specifications with limitations on acceptable admixtures.

The Contractor shall be responsible for determining the materials for all temporary works. Embedded devices shall be detailed to provide equal or better corrosion protection when compared to the element.

C4.4.4

Materials for structural steel and reinforcing steel are standardized in most agencies.

The use of prescriptive concrete mixes can be problematic with precast concrete fabrication. Many precast concrete fabrication facilities have internal batching equipment. Fabricators will also use concretes with strengths that are higher than specified strengths in order to expedite form stripping. The use of prescriptive concrete mixes may lead to longer fabrication times and higher costs. Performance specifications are commonly used in prestressed girder specifications for this reason.

The selection of materials that are not part of the completed structure fall under the realm of "Contractor means and methods." Materials for temporary works include, but are not limited to:

- falsework framing,
- embedded lifting devices,
- lifting hardware including slings, spreader beams, shackles, etc., and
- temporary support of excavation.

Another way to improve durability is to specify high-quality materials. Article 4.4.4 of the Guide Specifications for ABC recommends that the designer specify all materials required for the bridge including the materials used in joints.

Often, standard agency specifications do not cover the required performance for an ABC project. Speed of curing and strength gain require specialized cementitious materials. This article recommends the use of performance specifications in lieu of prescriptive specifications that are commonly used.

Embedded devices are often required for the handling of precast elements. This article notes that embedded devices must provide equal or better corrosion protection when compared to the element being lifted.

Detailing SPMT Systems

4.5—SPMT SYSTEMS

The Designer shall design and detail the bridge structure including all connections. The detailing of the interface between the bridge system being moved and the supporting structure at the bridge site shall account for the movement and setting of the bridge with the SPMTs.

The Designer shall detail a schematic preliminary representation of the SPMT installation methods. The plans shall include, but not be limited to:

- weight and center of gravity of the portion of the bridge to be moved,
- preliminary SPMT sizes and layout,
- allowable twist in the structure during the move,
- allowable differential deflection between support locations,
- estimated dynamic effects used for the design of the bridge,
- locations of support for the bridge in the staging area,
- locations of support for the bridge on the SPMTs,

C4.5

Special care should be taken when detailing the connection at the interface of the bridge system and the supporting elements. Features such as sloping bridge seats, pedestals, and cheekwalls can make the final setting difficult. This may require the movement of the bridge at a higher elevation and jacking of the bridge during the final setting. See Article 1.5 for more information on SPMT installations.

- assumed static reactions at each support point during the bridge move and variation in the reactions under the application of the maximum allowable twist,
- schematic details of the allowable methods of attachment of the bridge to the falsework,
- assumed travel path for the SPMTs,
- assumed staging area including schematic details of the temporary supports in the staging area,
- geotechnical information in the staging area and along the travel path including results of subsurface investigations, and
- allowable temporary foundation types for the temporary supports in the staging areas including allowable bearing pressures or recommended pile sizes and allowable pile loads.

We will now cover the provisions in the Guide Specifications for ABC that pertain to detailing.

Article 4.5 covers Detailing requirements for SPMT systems. This article stresses the need to consider the interface between the superstructure and the substructure. The key is the simplicity of details to minimize problems in the field.

The requirements for plan details by the designer are included in this article.

Detailing Lateral Slide Systems

4.6—LATERAL SLIDE SYSTEMS

The Designer shall design and detail the bridge structure including all connections. The detailing of the interface between the bridge system being moved and the supporting structure at the bridge site shall account for the movement and setting of the bridge.

The Designer shall detail a schematic preliminary representation of the lateral slide installation methods. The plans shall include, but not be limited to:

- weight of the portion of the bridge to be moved,
- schematic details of the allowable sliding bearing type(s),
- assumed location of jacking/pulling force including assumed friction values,
- assumed vertical jacking and support locations before, during, and after the slide installation,
- schematic details of the temporary falsework including details for the connection (or lack of a connection) between the temporary falsework and the permanent bridge substructures,
- geotechnical information beneath the temporary falsework including results of subsurface investigations, and
- allowable temporary foundation types for the temporary supports in the staging areas including allowable bearing pressures or recommended pile sizes and allowable pile loads.

C4.6

The interface with the bridge system and the substructure is typically detailed as a flat joint. Sliding a structure along a grade is not recommended.

The most common detail for bearing lines is a reinforced or post-tensioned integral diaphragm with discrete support points called slide shoes that are not necessarily coincident with the beams. Figure 4.6-1 shows a schematic representation of a slide shoe detail. This detail is applicable to several different types of mechanical sliding systems. The slide bearings or rollers can be placed under the slide shoe or between the slide shoes. The permanent bearings are typically placed under the slide shoes. Vertical jacks can be placed alongside the slide shoes. This approach allows significant flexibility in the design of the slide system. It also reduces the total number of bearings.

It is also feasible to detail a non-integral diaphragm, thereby placing a sliding bearing directly under each beam. This will require more slide bearings and permanent bearings than the integral diaphragm option. In this case, the diaphragms between the beams should be designed and detailed to resist vertical jacking forces.

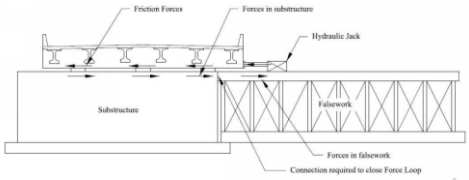

Figure 1.6.1.4-1—Falsework Connected to Substructure (Resolution of Friction Forces

Article 4.6 of the Guide Specifications for ABC includes detailing requirements for lateral slide systems. The requirements for plan details are outlined in this article.

Detailing of GRS-IBS

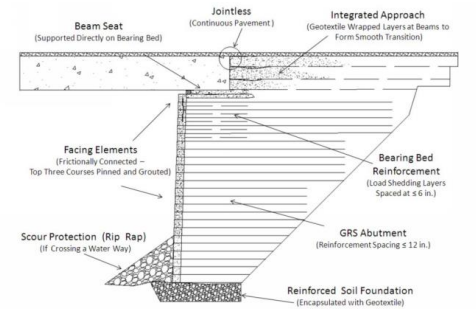

Figure 4.7-1—Typical Section of GRS IBS Abutment
Source: ***Geosynthetic Reinforced Soil Integrated Bridge System Interim Implementation Guide*** **(2012)**

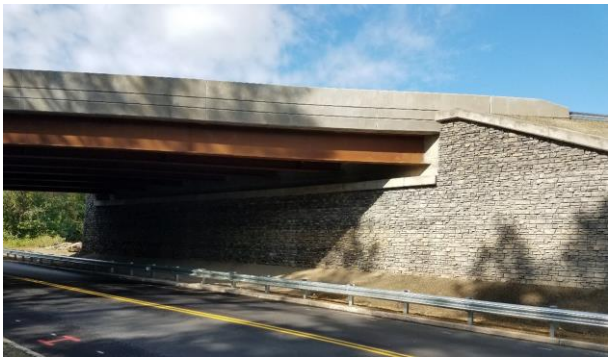

Article 4.7 of the Guide Specifications for ABC includes detailing provisions for Geosynthetic Reinforced Soil - Integrated Bridge System or GRS-IBS.

GRS-IBS is an innovative form of a mechanically stabilized earth structure that was developed by FHWA. The difference between this and a conventional MSE abutment is that the superstructure is integrated into the abutment structure in a similar fashion to an integral abutment bridge. The spacing of soil reinforcement layers is much closer than a typical MSE abutment. The abutment is designed to flex with the thermal movement and rotation of the superstructure. This eliminates the need for bridge bearings. It also eliminates the need for approach slabs. This results in a very economical structure that is very durable. It can also be constructed quickly, with minimal equipment, which is why it is included in this Guide Specification.

We have not covered this technology in much detail in this training, since it is relatively new and not widely specified. FHWA has published detailed design specifications and construction specifications that can be used by designers. For this reason, the provisions in the guide specification are cursory, with reference to the FHWA documents.

Article 4.7 of the Guide Specifications for ABC include general detailing requirements for GRS-IBS.

The photo on the right shows a completed GRS-IBS bridge in Connecticut. We know these structures are cost-effective since they are routinely specified by design-build contractors.

Detailing of GRS-IBS

4.7.1—LAYOUT GEOMETRY OF FACING BLOCK

The geometry of the facing block needs to be detailed to account for all aspects of the abutment and associated appurtenances.

C4.7.1

This article focuses on the use of concrete facing block (dry cast or wet cast), since it is the most prevalent form of facing material.

The layout of the facing block needs to account for various aspects of the bridge including, but not limited to:

- the required horizontal bridge opening,
- depth of beam seat,
- skew of the bridge,
- installation of driven rail posts on the bridge approaches, and
- accommodation of subsurface utilities.

Figure 4.7.1.3-1—Typical Beam Seat and Setback of Facing Block
Source: ***Geosynthetic Reinforced Soil Integrated Bridge System Interim Implementation Guide*** **(2012)**

Article 4.7.1 of the Guide Specification includes recommendations for the layout geometry of facing blocks for GRS-IBS bridges.

The photo on the right shows the recommended minimum bearing length of the beams on the GRS-IBS soil.

Section 5 – Durability of ABC Technologies

Section Covers

- Integral and Semi-integral abutments
- Connection detailing
- Deck details
- Corrosion Protection

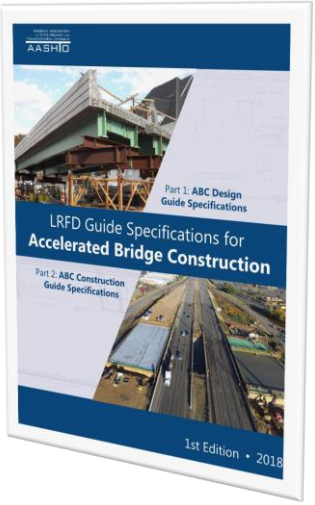

Section 5 of the Guide Specifications for ABC covers recommendations to improve durability in ABC projects. The goal is to provide equal or better durability when compared to conventional construction.

This section includes provisions for jointless bridges, recommendations for connection detailing, recommendations for deck details, and corrosion protection strategies.

In the following slides will review these provisions.

Precast Concrete

5.5.1—DURABILITY OF PRECAST CONCRETE ELEMENTS

Fabrication of separate precast elements should produce structures with less shrinkage-induced restraint cracking.

Proper curing of plant produced elements shall be specified to ensure durable concrete elements.

The use of standard high performance concrete deck mixes shall be considered for precast bridge deck elements.

C5.5.1

Individual precast elements have the ability to shrink in an unconfined condition during curing as opposed to site cast concrete that may be placed against adjacent portions of the structure. In this condition, the newly cast concrete is restrained from shrinking by the adjacent structure, which can lead to shrinkage cracking. For example, concrete bridge barriers can develop vertical cracks at regular intervals due to the restraint of the bridge deck below.

Curing of concrete serves multiple purposes. It can aid in strength gain, but more importantly, it can reduce permeability, which improves durability. Part 2 contains more information on fabrication and curing for precast concrete elements.

Many agencies have developed high performance deck concretes that have normal strength, but very low permeability. Agencies should consider requiring similar mixes for precast deck elements to improve the long-term durability.

Article 5.5.1 of the Guide Specifications for ABC outlines the reasons for durability achieved with precast concrete elements.

The first reason is that individual precast elements are free to shrink during curing, which leads to less cracking in the element.

The second reason is that precast facilities often use special curing methods that can provide a more durable product.

The last provision recommends the use of high-performance concrete mixes for deck panels. The concrete should have admixtures to reduce permeability.

Connections

5.5.2—ELEMENT CONNECTIONS

The connections between prefabricated elements shall be detailed to be structurally adequate and durable.

Connections in critical locations shall be detailed as reinforced moment connections. Joint filler materials shall provide equal or better durability when compared to the connected elements.

C5.5.2

Connections in prefabricated bridge element construction have been the source of concern regarding durability by some Designers. The concern arises from the presence of joints in a structure that may lead to future deterioration. Joints in structures are not limited to prefabricated bridges. All bridges have construction joints throughout. The goal of structure emulation detailing is to replace construction joints with durable connection joints. If properly detailed, these connection joints can provide equal durability when compared to typical construction joints.

Section 3 contains more information on element connections. All of the connections included in Section 3 have proven to be durable. Common durable connections include:

- cast-in-place concrete closure joints using lapped bar reinforcement
- mild reinforced joints with mechanical reinforcing bar connectors combined with a grouted joint
- grouted post-tensioned joints combined with grouted keys
- deck link slabs

Article 5.5.2 of the Guide Specifications for ABC notes that connections should be designed to be structurally adequate and durable. Connections in critical locations should be detailed as reinforced moment connections. This will reduce the potential for joint opening under load. The commentary includes common durable connections that are included in the Guide Specifications for ABC.

This article also notes that the filler material, which is often cementitious, should have equal or better durability when compared to the connected element.

Connections

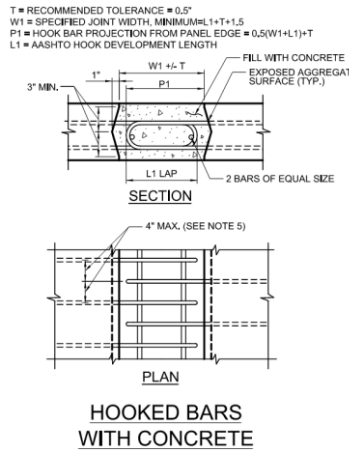

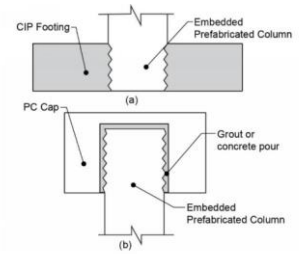

Figure C3.6.7-1—Examples of Socket Connections

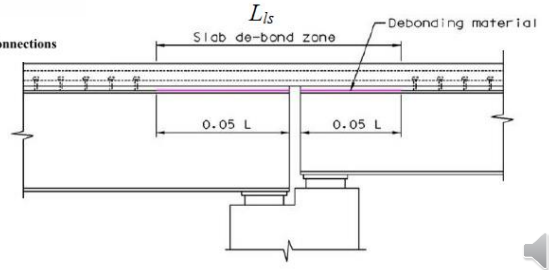

This slide shows connections that are considered to be durable. All of these connections are included in the Guide Specification provisions.

The detail on the left is it commonly used deck-level connection that involves the use of hooked bars in cast-in-place concrete joint filler. With proper surface preparation of the sides of the elements, this connection has proven to be very durable.

The center detail shows several socket connections. These connections provide durability that is equal to cast-in-place concrete.

The detail on the right shows a deck-level link slab. Many designers have expressed concerns that link slabs might crack when subjected to live loads. A properly designed link slab should not crack beyond the serviceability requirements specified in the AASHTO LRFD Bridge Design Specifications. The cracking in a link slab is essentially similar to the design for crack control in a continuous girder deck. Therefore, the durability should be equal to or better than conventional construction.

Detailing Mechanical Connections

5.5.2.1 Concrete Cover with Mechanical Connectors

The detailing of reinforcement in elements with mechanical connectors shall account for the size of the coupler. Reinforcing bars shall be detailed to provide adequate concrete cover over the connector.

The Designer shall specify the distance to the center of the spliced bars. The specified dimension shall be based on the maximum diameter of the available mechanical connectors plus the required cover.

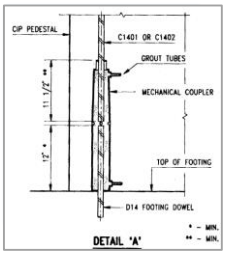

C5.5.2.1

The mechanical connector will be larger than the connected bar. There are several manufacturers of mechanical connectors, however there is no standard connector size. This issue requires a different approach to the detailing of concrete cover.

Table C5.5.2.1-1 shows the recommended detailing dimensions for commonly available grouted connectors. These connectors are well suited for prefabrication and have been used on many successful projects. These dimensions encompass the dimensions of these common connectors. These dimensions are preliminary and not guaranteed. Designers should contact approved companies to verify these dimensions.

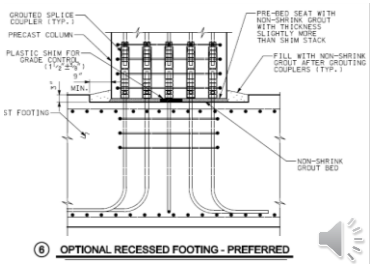

An important aspect of durability is concrete cover over internal reinforcing. Article 5.5.2.1 of the Guide Specifications for ABC include provisions for concrete cover when using mechanical connectors.

The concrete cover around the connector should not be less than the specified concrete cover in other portions of the element. The couplers have a larger diameter than the connected bars. For this reason, the reinforcing cage needs to be specified deeper into the element in order to achieve the required cover around the coupler.

In lieu of specifying cover, it is recommended that designers specify the distance from the surface of the element to the centerline of the bar when couplers are used. The reason for specifying to the center of the bar is that there are several coupler manufacturers in the market that have couplers with different diameters.

Detailing Mechanical Connections

Table C5.5.2.1-1—Dimensions of Common Grouted Reinforcing Bar Connectors

Bar Size	Outside Diameter (in.)	Length of Connector (in.)
4	2.63	14.13
5	3.00	14.13
6	3.00	14.13
7	3.00	18.75
8	3.50	18.75
9	3.50	18.75
10	3.50	23.50
11	4.00	23.50
14	4.00	28.38
18	4.50	39.63

Other mechanical connectors can be used, provided that they can meet the strength requirements of Article 3.6.4. Designers should contact manufacturers to determine the required dimensions for detailing.

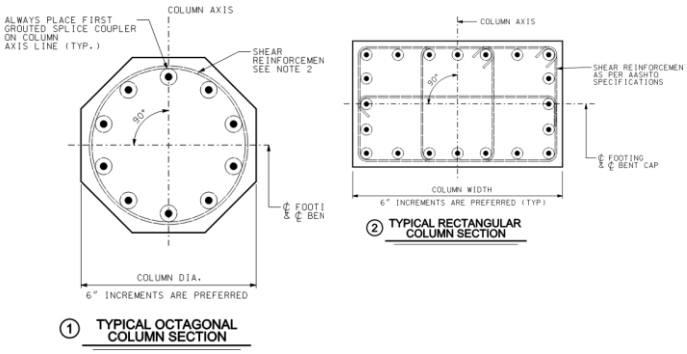

Table C5.5.2.1-1 of the Guide Specifications for ABC gives the outside diameter and length of couplers for use and design and detailing. This table was developed using the sizes of commonly used couplers.

The details on the right show how much larger the couples are when compared to the internal bar. This demonstrates the importance of this type of detail specification. As we previously discussed, this can also result in larger reinforcing bars when compared to cast-in-place concrete, where the cover is specified to the edge of the bar.

Detailing Headed Bar Connections

5.5.2.2 Concrete Cover with Headed Reinforcement

The detailing of reinforcement in elements with headed anchorage ends shall account for the size of bar head. Reinforcing bars shall be detailed to provide adequate concrete cover over the bar head.

Table C5.5.2.2-1—Dimensions of Common Headed Reinforcing Bars

Bar Size	Head Diameter (in.)
3	1.1
4	1.6
5	2.0
6	2.4
7	2.8
8	3.2
9	3.6
10	4.0
11	4.5
14	4.5
18	5.1

C5.5.2.2

There are different sizes of headed bars in the market. The specification for headed reinforcing bars is ASTM A970. The provisions in Article 3.6.2.3 of these Guide Specifications are based on the use of Class HA headed bars. This class of bar is included in Annex A1 of ASTM A970. This specification requires that the head bearing area be equal to or greater than 4 times the area of the bar. There are several manufacturers of headed bars that meet this specification, however there is no standard head size, and sizes vary from one manufacturer to another.

This issue requires a different approach to detailing of concrete cover. In lieu of specifying cover over the bars, the Designer should specify the distance to the center of the spliced bars. The specified dimension should be based on the maximum diameter of the available mechanical connectors plus the required cover.

Table C5.5.2.2-1 lists the diameter of round heads for various bar sizes based on ASTM A970 and material data from the most common headed bar manufacturers. These dimensions encompass the dimensions of these companies. These dimensions are preliminary and not guaranteed. Designers should contact approved companies to verify these dimensions.

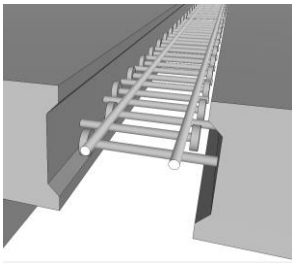

A similar issue applies to headed reinforcing bars. Article 5.5.2.2 of the Guide Specifications for ABC includes a table of the head diameters for all bar sizes. As with couplers, the designer should specify the distance from the face of the element to the centerline of the headed bar in order to achieve proper cover over the head of the bar.

Joint Protection

5.5.2.3 Location of Joints and Joint Protection

Joints between prefabricated elements should either be detailed for durability, protected from moisture ingress, or located in areas that are not exposed to deleterious elements.

Where protection from moisture ingress cannot be ensured, non-corrosive materials such as stainless steel reinforcing or Ultra High Performance Concrete should be considered.

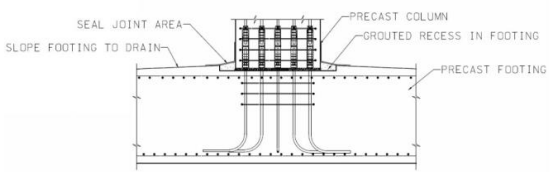

C5.5.2.3

Properly detailed joints can provide excellent durability regardless of their location on the structure. Cast-in-place reinforced closure joints and grouted reinforced closure joints have performed well, even in harsh environments, as documented in studies by the Utah DOT entitled *Performance of Accelerated Bridge Construction Projects in Utah* (2009, 2010, 2011, 2013).

Joints subjected to harsh environments can be protected in several ways. Deck joints can be protected through the use of waterproofing membranes and overlays or thin polymer overlays. Some joints can be protected by secondary grouting or encasement in concrete. Figure C5.5.2.3-1 depicts a recessed grouted joint between a column and a footing, a seal around the joint, and a sloped footing top. All or some of these measures can provide additional corrosion protection to the joint. The primary protection is the reinforced grouted joint. It should be noted that the footing recess can lead to other issues. In this case, the footing thickness needs to be increased in order to recess the top reinforcing layer deeper into the footing, resulting in a heavier footing.

Article 5.5.2.3 of the Guide Specifications for ABC notes that joints should be detailed for durability, protected from moisture ingress, or located in areas where they are not exposed to deleterious elements.

The detail shown is from the PCI Northeast Bridge Technical Committee. It depicts a column to footing connection that may be exposed to excessive moisture. In this case, the designer may elect to require a secondary grout seal around the column base. It should be noted that this does increase the amount of concrete in the footing.

This article also notes that in highly corrosive environments, the designer may want to consider the use of non-corrosive materials such as stainless steel, or UHPC, which has very low permeability.

Void Grouting

5.5.2.4 Complex Void Grouting

Special care should be taken for grouting of intricate and complex voids to ensure that the void is being properly filled.

Specifications for projects with complex grouting should include requirements for test pours of grouts in a void mock-up.

C5.5.2.4

Poorly filled voids can lead to problems with performance and durability.

Two approaches can be used for the mock-up. The mock-up can be made of wood that can be disassembled to verify the flow of grout. The mock-up can also include transparent sides where the flow of grout can be witnessed during the test pour.

The grouting of complex voids can lead to air pockets that can detract from the performance and durability of the connection. Article 5.5.2.4 of the Guide Specifications for ABC recommends that test pours be specified for complex voids so that the Contractor can demonstrate that the selected grout and grouting methods will properly fill the void. The test pour or mock-up is typically disassembled to verify that the voids are properly filled.

Materials for Joints

5.5.2.5 Materials for Closure Joints

Materials used for closure joints shall have equal or better durability than the connected elements. The following durability characteristics should be chosen for closure joint materials:

- Low permeability
- Low shrinkage
- High bonding
- Freeze-thaw resistance (northern environments)

The materials should also have strength gain characteristics that are consistent with the intended construction schedule, and flow characteristics that allow for proper placement and consolidation.

C5.5.2.5

Materials for closure joints can range from normal concrete to complex grouts made with various materials. Pre-mixed bagged grouts are common for small joint closures. Part 2 contains more information on specifying closure joint materials.

Specifying materials will be covered later in this training

45

Article 5.5.2.5 of the Guide Specifications for ABC include provisions for specifying materials for joints. The key to performance is that the materials should have:

- Low permeability,
- Low shrinkage,
- High bonding capacity,
- and good Freeze-thaw resistance.

By using these performance criteria, the design will be more durable.

The Guide Specification provisions for specifying joint materials will be covered later in this training.

Durable Deck Details

5.5.3—PREFABRICATED DECK DETAILS

Bridge decks should be designed and detailed with the minimum number of expansion joints possible. Continuous girders, jointless decks, and integral abutments should be considered.

The corrosion protection for reinforcing placed in prefabricated decks should be equal to or better than that used in cast-in-place concrete decks.

C5.5.3

Leaking expansion joints can lead to long-term deterioration of the deck and the supporting elements. Single span bridges and shorter length multi-span bridges can be designed with integral abutments, which result in a jointless bridge.

The methods for providing corrosion protection of bridge decks vary from agency to agency. They include, but are not limited to, the following:

- Coated bars (epoxy and galvanizing)
- Corrosion resistant uncoated bars
- Stainless steel bars
- Waterproofing membranes
- High-performance concrete

46

It is well known in the bridge industry that expansion joints in decks can lead to serious deterioration. The use of prefabricated decks should not be based on the use of expansion joints.

Article 5.5.3 of the Guide Specifications for ABC notes that bridge decks should be designed as jointless including the use of integral abutments.

This article also includes recommendations for using corrosion-resistant bars in bridge decks, combined with means of preventing moisture from reaching the bars, including waterproofing materials and the use of high-performance concrete.

Deck Connections

5.5.3.1 DECK CONNECTIONS

Connections between prefabricated deck elements shall be detailed as moment connections using lapped bar reinforcement, post-tensioning, or mechanical devices.

The surface treatment of precast deck panels should be fabricated with an exposed aggregate finish to improve the bond of closure joint materials. The exposed aggregate surface need not be detailed with a specific minimum amplitude surface.

C5.5.3.1

Closure joints differ from expansion joints. Properly detailed closure joints have proven to be as durable as conventional concrete decks as documented in studies by the Utah DOT (2009, 2010, 2011, 2013).

This recommendation is based on the anecdotal experience of several state agencies where deck leakage was found at the panel closure joint interface. Exposed aggregate surfaces have shown to provide better aggregate interlock and contain less potential for surface contaminants such as carbonation. The amplitude of the exposed aggregate surface is not critical to provide adequate performance.

The studies noted above included a number of bridges built with post-tensioned connections built without exposed aggregate surface on the panel edges. These bridges have performed very well over a number of years.

We have mentioned several times in this training of the importance of joint surface preparation for precast element connections.

Article 5.5.3.1 of the Guide Specifications for ABC recommends that these surfaces be fabricated with an exposed aggregate finish. This not only improves the bond of the filler material, but it also reduces the potential for moisture ingress.

We have seen many designers specify an amplitude for the surface of these joints. The common specification is ¼" amplitude. Research has shown that this amplitude is not necessarily required. The ¼" amplitude specification is taken from the AASHTO LRFD Bridge Design Specifications for interface shear on top of prestressed concrete girders. Those provisions are intended to provide improved structural shear transfer. If a joint is detailed with a faceted shear key, the shear transfer across the interface plane is not as important. Experience and research have shown that simply removing the smooth surface of the concrete and exposing the fine aggregate is sufficient to provide a strong and durable connection.

One reason for not specifying a large-amplitude surface is the cost of achieving the large amplitudes. Significant effort is required on the part of the fabricator to do this. There also is potential to damage surface coatings on reinforcing bars projecting from the element during this process. To achieve a required exposed aggregate surface, the element is simply fabricated with a retarder applied to the side form combined with a simple power washing after stripping.

If shear keys are not proposed, then the designer may wish to consider the larger amplitude.

Deck Protection

5.5.3.2 BARE DECKS

Special care shall be exercised for the design and detailing of bare concrete decks. Only high quality materials shall be used for closure joints. Designers shall specify sealing of any potential shrinkage cracks in the decks and closure joints after installation.

Bare concrete decks should be ground to a profile after installation to improve ride quality and reduce wheel impact loading.

C5.5.3.2

Minor cracking in closure joints and deck panels can occur, even with good materials and workmanship. Liquid deck sealers can be used to eliminate the potential ingress of water into cracks.

An improved riding surface will result in less impact, which should improve the long-term performance of the deck.

5.5.3.3 OVERLAYS

Overlays should be used to provide a secondary protection system for prefabricated bridge decks. Overlays can be made with high performance concrete, asphalt, or thin polymer impregnated with aggregate. Asphalt overlays shall be combined with high quality waterproofing systems.

C5.5.3.3

Thin high performance concrete overlays, such as latex modified concretes, have been successfully used. Asphaltic overlays require the inclusion of a waterproofing system under the asphalt due to the fact that most asphalts are porous. Lack of a waterproofing system can lead to rapid deterioration of the deck concrete. Asphalt overlays with waterproofing systems have proven to provide excellent long-term performance.

Article 5.5.3.2 of the Guide Specifications for ABC include provisions for the durability of bridge decks. If a bare concrete deck is desired, designers should pay close attention to the materials chosen in the elements and the connections to ensure durability. Diamond grinding of decks after installation is also recommended to improve the ride quality and reduce wheel impact loading.

Article 5.5.3.3 of the Guide Specifications for ABC notes that overlays can be used to provide additional deck protection. This is especially true for bridges in northern environments that use aggressive deicing chemicals. A number of northern states and European countries have had very good success with the use of high-quality membrane systems combined with asphalt overlays. If an asphalt overlay is specified, diamond grinding should not be required.

Durability of Post-Tensioning systems

5.5.4—CORROSION PROTECTION OF POST-TENSIONING TENDONS AND ANCHORAGES

Post-tensioning systems shall be properly protected from corrosion. The level of protection shall be commensurate with the exposure of the tendons and anchorages to aggressive environments.

The corrosion protection of the post-tensioning system shall be based on standardized protection levels. As a minimum, the following three levels of corrosion protection should be used for prefabricated bridge systems:

- concrete cover for ducts and anchorages equal to or greater than that used for element reinforcing steel
- corrosion protected ducts with quality duct splice devices
- high quality duct grout

C5.5.4

The FHWA manual entitled *Post-Tensioning Tendon Installation and Grouting Manual* (2013) contains information on corrosion protection. There are six level of potential corrosion protection for post-tensioning systems:

Level 1: Exterior surface of elements
Level 2: Concrete cover
Level 3: Corrosion-resistant ducts
Level 4: Grout within ducts
Level 5: Sheathing or coatings on strand
Level 6: Corrosion resistance strand

The basis for these recommendations is from the Post-Tensioning Institute (PTI) Committee M-50/ASBI Joint Task Group. This group has identified standardized Tendon Protection Levels (PL) for Post-Tensioning Systems and can be found in the PTI document entitled *Guide Specifications for Grouted Post-Tensioning* (2013).

Article 5.5.4 of the Guide Specifications for ABC includes provisions for corrosion protection of post-tensioning systems. These were taken from the FHWA manual entitled *Post-Tensioning Tendon Installation and Grouting Manual*. This manual outlines 6 potential levels of corrosion protection for tendons.

The Guide Specification Recommends a minimum of three levels of corrosion protection for prefabricated bridge systems. The three recommended levels include:

- Concrete cover for ducts and anchorages equal to or greater than that used for the element reinforcing steel
- corrosion-protected ducts with quality duct splice devices,
- and, high-quality duct grout

Durability of Post-Tensioning systems

Anchorages for deck post-tensioning systems should not be detailed directly at a deck expansion joint. The anchorage assembly should be encased in a short closure pour at the end of the deck. Adequate concrete cover should be specified around the anchorage assembly.

Small closure pours are common in precast deck systems. The pours address several issues including the accommodation of tolerances and joint systems. The closure pour can also provide corrosion protection for the end of the anchorage. Concrete cover above and below the anchorage can be difficult to achieve in a thin precast concrete deck. The cover should be equal to or greater than the cover for the reinforcing steel in the deck. Several manufacturers produce anchorages that are designed for thin decks. Designers should verify that these anchorages can fit within the deck system with the required cover.

This article also recommends that anchorages for deck post tensioning systems not be located directly under deck expansion joints. These anchorages are typically protected by a short concrete closure pour at the end of the deck.

Control of Cracking

5.5.5—CONTROL OF CRACKING OF PRECAST ELEMENTS DURING CONSTRUCTION

The plans and specifications for precast elements shall include provisions to minimize cracking of elements during fabrication and handling.

Designers should consider the use of prestressing for long or thin elements.

C5.5.5

In general, lifting and handling of precast elements falls under the realm of "Contractor means and methods." Contractors or fabricators determine the methods of casting the elements and when and how to remove them from the forms.

See Section 8 for more information on lifting and handling provisions.

51

One way to reduce cracking in prefabricated concrete elements is to prevent cracking during shipping and handling. Article 5.5.5 of the Guide Specifications for ABC reinforces the concept of designing lifting hardware to prevent or minimize cracking during shipping and handling.

This article also suggest that designers consider prestressing long slender elements, as they are more subject to cracking during handling.

Detailing for Durability

5.4—SIMPLIFIED DETAILING FOR DURABILITY

Designers should strive to design prefabricated bridges with simplified element details that are easy and fast to construct, while providing a durable structure. The detailing should be consistent with the proposed ABC technology, and provide for adequate tolerances during assembly.

C5.4

Complex details can lead to fit-up problems during assembly. These problems can result in delays, which is contrary to the goals of ABC. Poor fit-up at expansion joints can also lead to potential leaks and poor performance.

There are many ways to detail an ABC bridge since there are different type of ABC technologies. Installation of prefabricated elements can be detailed with emulative joint details, while bridge system installations might require a different type of connection in order to facilitate the installation.

In the world of ABC, we have figured out how to build bridges quickly. In some cases designers detail bridges similarly to conventional construction. In many cases minor changes to detailing cannot only expedite construction, but can improve durability.

Article 5.4 of the Guide Specifications for ABC recommends that designers strive for simplified detailing of bridges.

In the following slides we will review some of the details in use that meet this recommendation. The goals of these details include:

- They are easy to construct , which reduces the risk of time delays,
- they also can reduce cost by minimizing contractor risk,
- and they produce a durable structure.

Cantilever Abutments

Connect cap piece with CMP void connection

- Complex details left to one piece
- Simplifies wall panels
- Low moment demand connection
- Easy construction

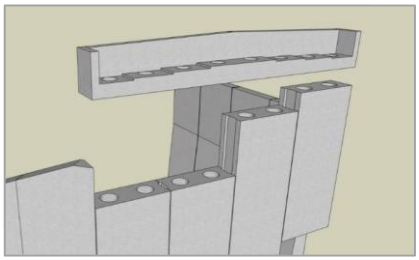

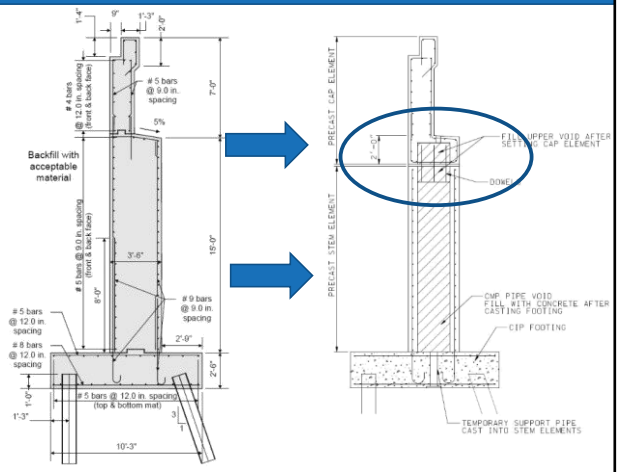

The PCI Northeast Bridge Technical Committee developed a concept for cantilever abutments that simplifies most of the detailing and fabrication. The concept is to have one complex element to fabricate and simplify the majority of elements.

The design of the connection between the cap and the stem elements was covered in a previous module.

The connection makes use of corrugated metal pipe voids, which can be used to reduce the weight of the stem elements and make the connections between adjacent elements. Once erected, the voids are filled with normal concrete to complete the installation.

Cantilever Abutments

Maine DOT Bridge

These photos show a bridge built by the Maine DOT using this concept.

The corrugated metal pipe voids in the stem were not only used to connect the cap to the stem, they were also used to connect the stem to the footing . The photo on the right shows reinforcing bars projecting from the footing into the void pockets.

The center photo shows the dowel bars projecting from the voids in the stem into the precast abutment cap. The photo on the left shows the completed abutment. This design is not only fast to construct, it also produces an aesthetically pleasing structure.

Pile Supported Footings

CIP Footing with Precast Column

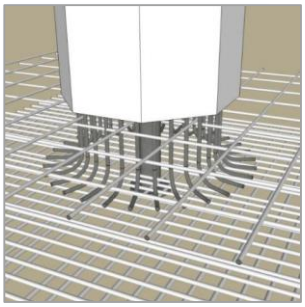

These sketches show another simplified detail for connecting a column to a footing or pile cap.

This detail can be used for both columns and wall panels. It is especially useful in bridges with pile supported footings. Prefabrication of pile footings can be very difficult to design and build. This process simplifies construction without sacrificing significant time.

This is a rather simple concept, but it is very effective. A temporary support strut can be cast into the column element or wall element to provide support before the footing is cast.

Socket Connections

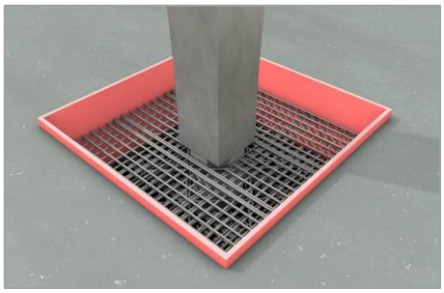

This type of socket connection was covered earlier in this training. It is included here because it is a simple and cost-effective detail.

As with the previous detail, this approach is beneficial for pile supported footings. The added benefit is that the entire footing reinforcing cage can set prior to the erection of the column, allowing for prefabrication of the footing reinforcing cage and quick installation.

Semi-Integral Lateral Slide

Semi-integral abutment

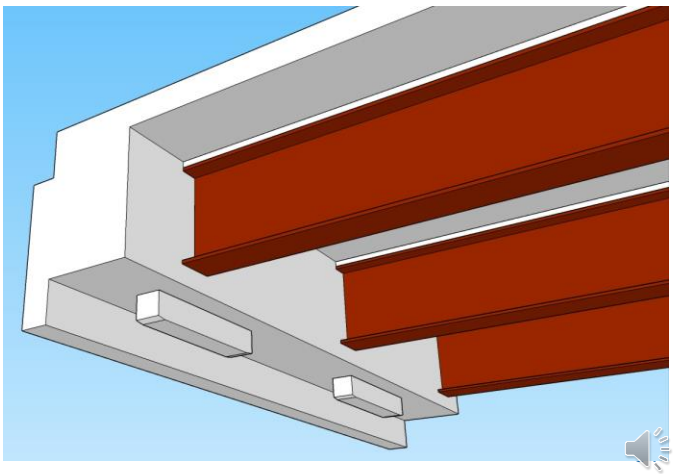

We reviewed this detail earlier in this training. It is an example of a semi-integral abutment that can be used for SPMT systems and lateral slide systems.

This detail also provides a jointless bridge where the beam ends are protected from moisture and deicing chemicals.

Semi-integral precast backwall

Bolted to beam ends

- Simple version of a complex detail
- Lap backwall behind abutment
- Can be wrapped around side walls

Figure C5.4.2-2—Semi-Integral Abutment with Wrap-Around Side Walls (design sketch on left, actual construction on right)

This is an example of another semi-integral abutment detail that has been developed in a few states. It involves precast backwalls bolted to the ends of beams.

This detail has a number of advantages. The walls can be wrapped around the ends of the abutments to retain side slopes. The backwall also serves as the end diaphragm, supporting the edge of the bridge deck.

The sketch on the left shows the concept for a bridge in Rhode Island. The photo on the right shows the actual construction prior to casting of the deck.

End of Module 5

Available Modules

Non-seismic

1. General Provisions and Common Connections
2. Substructure Design
3. Superstructure Design
4. Bridge Systems
5. Durability of ABC Designs
6. ABC Construction Specifications

Seismic

7. Introduction to ABC Seismic
8. Seismic Connection Design and Detailing
9. Seismic Pocket and Socket Connections
10. Seismic Integral Connections