Module 3: Superstructure Design

This Part covers:

- Precast full-depth deck panels
- Link Slabs

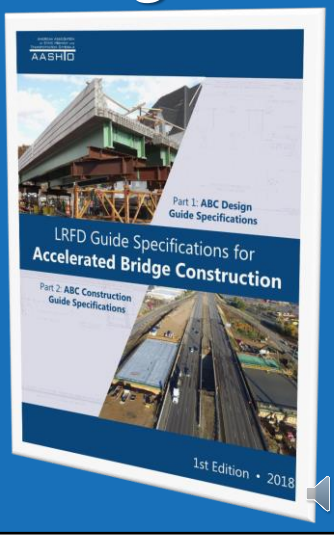

Module 3 covers Superstructure Design

This will include:

- Precast full-depth concrete deck panels.
    - Design of the panel
    - Design of closure joints with concrete fill
    - Design of closure joints with UHPC
    - Handling provisions
- Design of Link Slabs

Section 3: Full-Depth Deck Panel Design

3.5.1.6 **Full-Depth Precast Deck Panels**

Full-Depth precast deck panels may be used for bridge decks.

Full-Depth Precast deck panels shall be detailed with moment connections between adjacent elements. Connections between deck elements shall be made with reinforced closure joints (see Article 3.6.8). Connections for distribution reinforcing can be made with reinforced closure joints or with grouted keys combined with post-tensioning.

If moment connections are provided between the deck elements, the elements can be designed using the provisions for cast-in-place concrete as specified in the *AASHTO LRFD Bridge Design Specifications* including the provisions for deck overhangs. Special attention shall be given to the design of the deck overhang on precast/prestressed deck elements. Designers shall check the development length of the prestressing strand and its impact on the design sections for barrier impact. Designers shall also check serviceability requirements and requirements for deck overhangs.

C3.5.1.6

Durability of bridge decks is significant concern of owner agencies. Precast concrete full depth deck elements require many connections between the deck elements. Connections designed as reinforced moment connections have proven to provide durable long lasting bridge decks.

The most common design approach for precast concrete full-depth deck panels has been based on emulating cast-in-place concrete. Primary reinforcement and internal distribution reinforcement are typically designed using the Strip Method (approximate method of analysis for decks as specified in the *AASHTO LRFD Bridge Design Specifications*). The use of the empirical design method is not allowed for precast full depth deck elements. The design of the deck overhang is typically controlled by the forces due to a vehicle impact on the barrier, which will generate large forces (bending combined with transverse tension) in the deck at the base of the barrier. Mild reinforcement may be required to supplement the prestressing strand if the strand is not developed at this section.

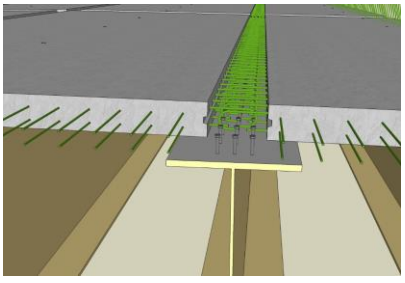

Article 3.5.1.6 of the Guide Specifications for ABC covers the design requirement for full-depth deck panels.

It is important that all joints between panels be designed and detailed as moment connections. This includes reinforced concrete closure joints, reinforced UHPC joints, and grouted shear keys combined with post-tensioning. This is specified in order to provide a durable deck. Inspections of precast decks in Utah have shown that joints design for shear only can result in significant leakage and joint degradation.

The photo to the right shows a reinforced concrete closure joint over a beam flange.

If moment connections are specified and detailed, the design of the deck panel and the reinforcing can be completed using the provisions for cast-in-place concrete as specified in the AASHTO LRFD Bridge Design Specifications. The use of the strip method for deck design can be used and is recommended. Forces acting on the closure joints can be calculated using the normal AASHTO design procedures for cast-in-place concrete.

The guideline makes note that special attention is required for deck overhangs. The design is not different, however, the detailing can be problematic with large numbers of bars in this location. If the panel is designed with prestressing, it is important to note that the maximum bending moment may occur at the base of the barrier, which is typically within the development length of the strand. For this reason, additional mild reinforcing bars will be required in most cases.

Section 3: Full Depth Deck Panel Design

Precast concrete full depth deck panels can be made composite with the supporting beams or girders with shear connector through the use of pocket connections (see Article 3.6.8.3) or within a closure joint.

Pockets can be formed in the precast deck elements at regular intervals. Shear connectors that project from the supporting beam project into the pockets. The pockets are then filled with grouts or other cementitious materials to form the connection. The gap between the underside of the deck element and the top of the beam (often referred to as the "haunch") is also filled with grout or cementitious material. Some agencies have detailed a closure joint over the supporting beam which provides a location for placement of shear connectors.

Research has shown that partial depth "hidden" pockets can provide full composite action (Badie and Tadros, 2008). These pockets are open on the underside of the deck panel, but closed on the top surface. Shear connectors are installed in pre-determined locations on the girders prior to placement of the deck panels. Once the panels are set, the pockets are filled with grout through ports in each pocket.

The PCI Report (2011) on full depth deck panels is a good resource for more information on design of full depth deck elements. This document also contains numerous references to the many studies that have been completed on precast concrete full depth decks.

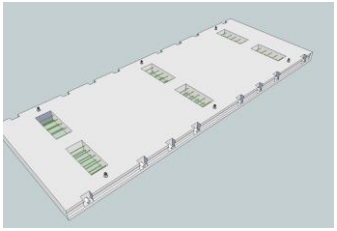

This portion of the guide specification indicates that full composite action can be provided by placing shear connectors within pockets cast into the panel. This aspect of precast deck panels has been thoroughly researched buy a number of institutions.

The design of the shear connectors is the same as with a cast-in-place concrete deck. The only difference in the design is that the spacing of the shear connectors needs to be modified to fit within the pockets. The total number of shear connectors and the average spacing of shear connectors should be the same as in a cast-in-place concrete design.

A common issue with the design of precast deck panels on steel bridges is the number of shear connectors that are required within a given length. In many cases, it is difficult to fit the shear connectors in discreetly spaced pockets. The sketch to the right shows a panel design with larger pockets that have reinforcing bars passing through them. This design can accommodate large numbers of shear connectors in a very short distance. This was developed by the PCI Northeast Bridge Technical Committee. Details for this design can be found at www.pcine.org.

Example: Precast FDDP Design

Reference

- FHWA LRFD Design Examples

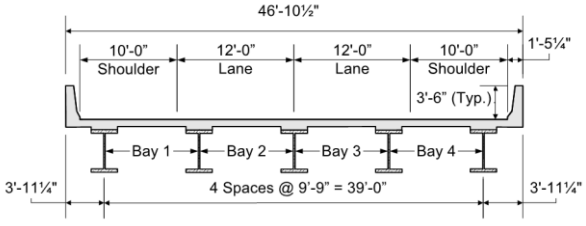

Figure 2-1 Superstructure Cross Section

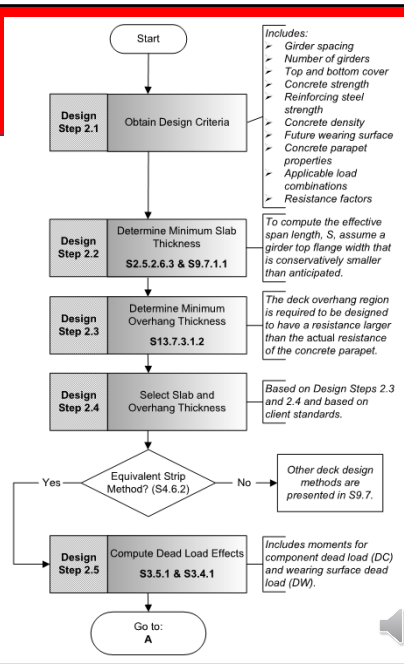

We will now go through a design example for a precast full-depth deck panel. We will cover the design of the deck panel reinforcing and the design of closure joints between panels. We will limit the design to the main deck reinforcing. The design of reinforcing for negative moments over piers would a similar process.

We will again be using the FHWA LRFD design example as the basis for this example. This is denoted by the red header at the top of the slide.

The figure on the left shows the cross section of the bridge. The diagram on the right is the flow chart for the design of the deck in accordance with the AASHTO LRFD Bridge Design Specifications.

Example: Precast FDDP Design

Reference

- FHWA LRFD Design Examples

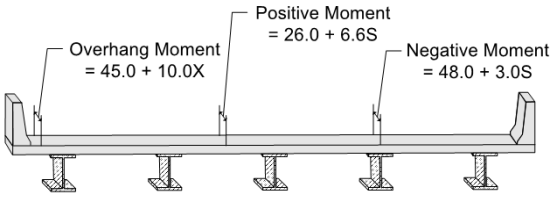

Figure 2-2 Equivalent Strip Equations for Various Parts of the Deck

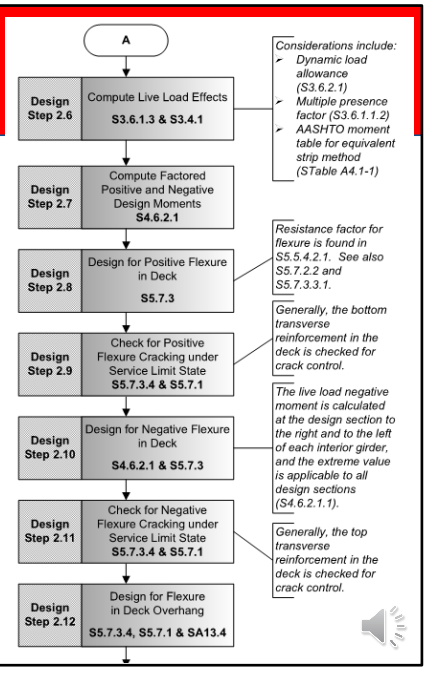

The AASHTO strip method can be used for the design of precast panels. This method is a 2 dimensional design method, however 3 dimensional effects are accounted for by varying the width of the strips in different portions of the deck.

The figure on the left shows the AASHTO equations for strip width in positive moment regions, negative moment regions, and in the deck overhang.

The flow chart on the right shows the design process for these regions. It is important to note that the panels and the connections still need to be designed for serviceability.

Example: Precast FDDP Design

Reference

- FHWA LRFD Design Examples

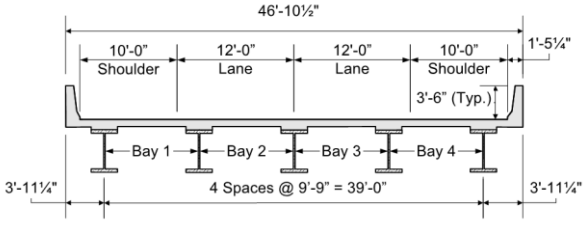

Figure 2-1 Superstructure Cross Section

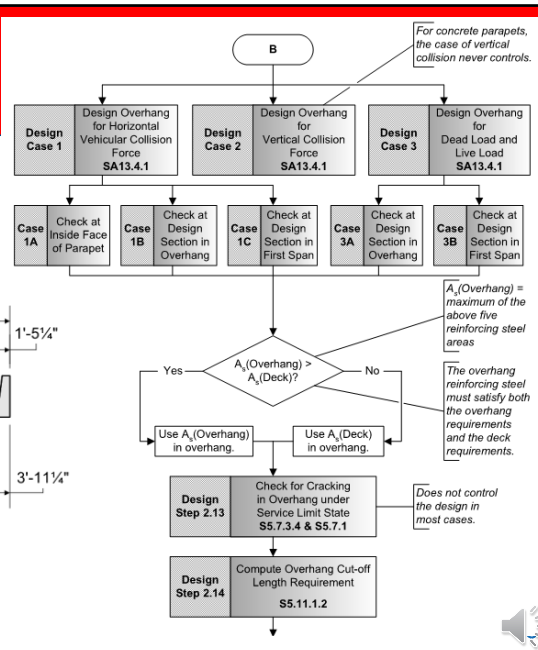

The diagram on the right shows the process for designing the deck overhangs. As you can see there are multiple locations that need to be checked, which can get quite complicated. For this reason, we will not cover this in significant detail today, as it is the same as a cast-in-place concrete deck.

Example: Precast FDDP Design

Reference

- FHWA LRFD Design Examples
- Results

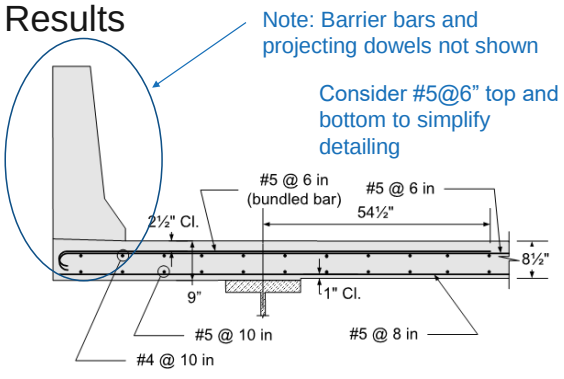

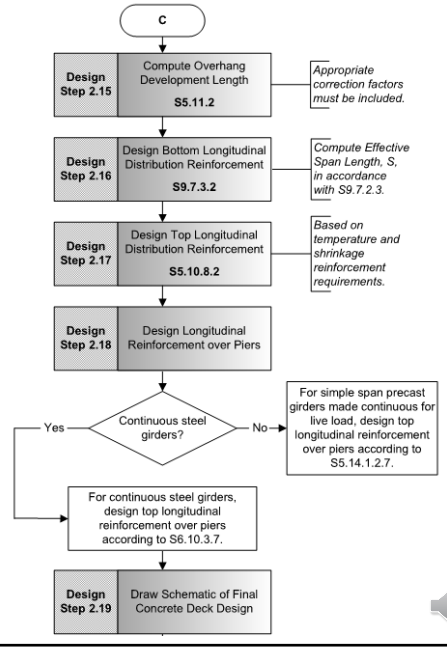

This detail shows the results of the deck design from the FHWA design example. The required reinforcing in the deck is #5@6" on the top and #5@8" on the bottom. In many cases, designers will maintain the same bar spacing on top and bottom to facilitate the connections. For example, if hooked bars are used for the connection, the top and bottom bars should have identical size and spacing in order to use a continuous hook.

This detail also shows the results of the deck overhang design in the Federal Highway design example. This demonstrates the significant amount of reinforcing required in these overhangs. The design includes bundled #5 bars spaced at 6 inches. The designer would need to check the layout of these bars and adjust the spacing as necessary to avoid conflicts with the shear connector pockets.

Example: Precast FDDP Design

Closure joint with UHPC:

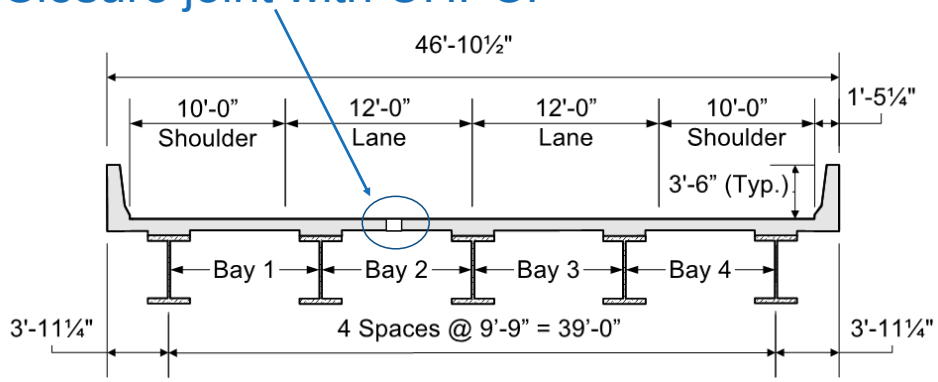

Now that we know the required reinforcing in the deck, we can design the closure joint between the deck panels. We will look at a longitudinal joint in Bay 2. It is common to have a longitudinal joint in full-depth deck panel bridges. This is done for several reasons:

- The joint can be used to accommodate a roadway crown if present.
- The joint can be used to limit the maximum length of the deck panel to facilitate shipping and handling.
- The joint can also be used to ensure a smooth deck edge on the overhang. The joint can be detailed with sufficient tolerance to allow minor adjustments to the transverse location of the panels to achieve this.

Example: Precast FDDP Design

Skewed panel layout

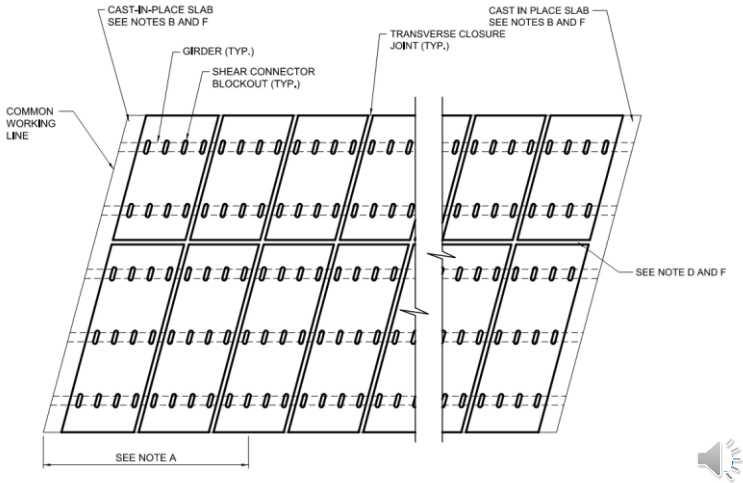

This detail shows a potential layout for a bridge with reinforced concrete closure joints. This detail shows narrow joints that might be made with ultra high performance concrete. If other joint designs are used, the spacing of the panels would simply increase.

It is possible to skew deck panels up to the maximum allowable angle for skewed reinforced concrete decks, which is 25 degrees. Skewing the panels and the reinforcing simplifies the connections and the detailing of the panels.

More details can be found in the PCI Northeast Recommended Guide Details that can be found at www.pcine.org.

Example: Precast FDDP Design

Squared panel layout

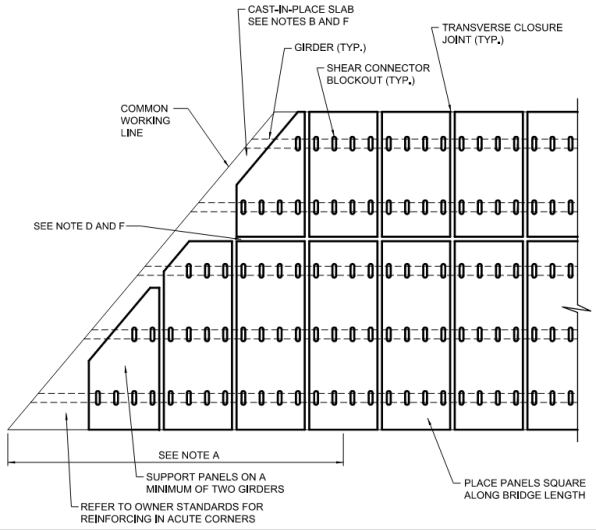

This detail shows a potential layout for a bridge with reinforced concrete closure joints. Again, this detail shows narrow joints that might be made with ultra high performance concrete. If other joint designs are used, the spacing of the panels would simply increase.

This detail shows one way to handle bridges with larger skews. The skewed ends require custom panels.

Again, more details can be found in the PCI Northeast Recommended Guide Details that can be found at www.pcine.org.

Example: Precast FDDP Design

Longitudinal panels: PCI Northeast

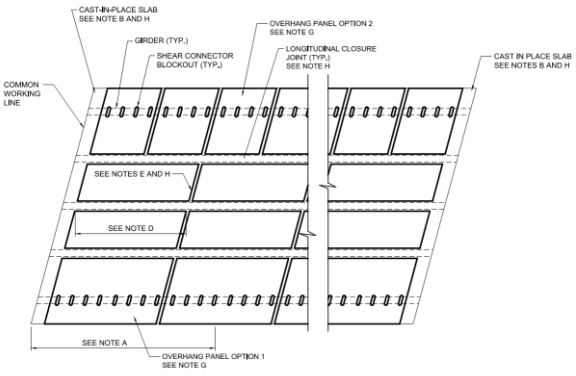

TYPICAL LAYOUT PLAN
SKEW BETWEEN 0 AND 25 DEGREES

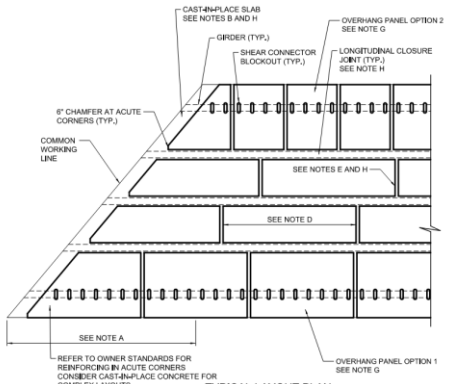

TYPICAL LAYOUT PLAN
SKEW GREATER THAN 25 DEGREES

There are other ways of laying out panels connected with reinforced concrete closure joints. These details were developed by the PCI Northeast Bridge Technical Committee. The concept is to run the panels lengthwise, parallel to the girders as opposed to perpendicular to the girders. This system has advantages in that the interior girder flanges can be used as the bottom form for the closure joint. It also facilitates the placement of welded stud shear connectors.

It should be noted that bridges with vertical curves may need special treatment in order to provide a smooth profile. This might include diamond grinding or the addition of an overlay to smooth out the roadway.

Example: Precast FDDP Design

Longitudinal panels: PCI Northeast

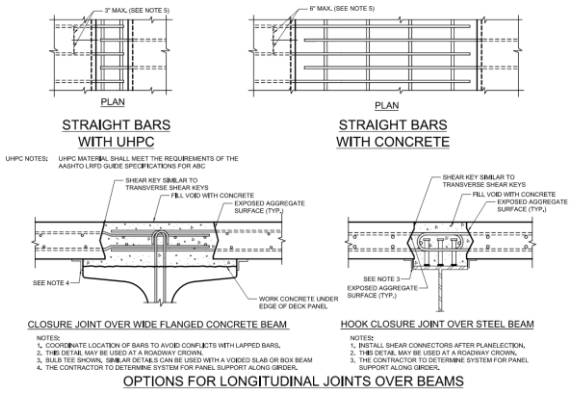

Commonwealth Ave. Bridge – Boston, MA

These are more details taken from the PCI Northeast Guide Details. All of the connections shown are covered in the Guide Specifications for ABC. The joints can be made with any type of concrete including UHPC.

The photo on the right shows an example of this approach. It is the Commonwealth Avenue Bridge over I-90 in Boston MA.

Panel Connection Options

Post-tensioning with grouted shear keys

- Refer to PCI state of the art report
- Available for free at: www.pci.org

We will cover reinforced closure joints with concrete

- PT joints are very durable
- More difficult to build
- Reinforced joints are becoming more popular in the US
  - Normal concrete (High early strength)
  - UHPC

There are several options for panel connections in the Guide Specifications for ABC. A design example is available for the design of deck panels with grouted keys and post-tensioning from PCI national at www.pci.org. They have published a "state-of-the art" report on full depth deck panels that includes a fully worked design example with post tensioning.

Post tensioned joint designs have proven to be very durable, however they are more difficult to build, resulting in higher costs.

Today we will cover the design of reinforced closure joints with concrete. We will cover joints made with normal concrete and UHPC.

Example: Precast FDDP Design

Closure joint with concrete

- PCI Northeast recommended detail
- www.pcine.org
  - Need: Lap length to complete the Detail

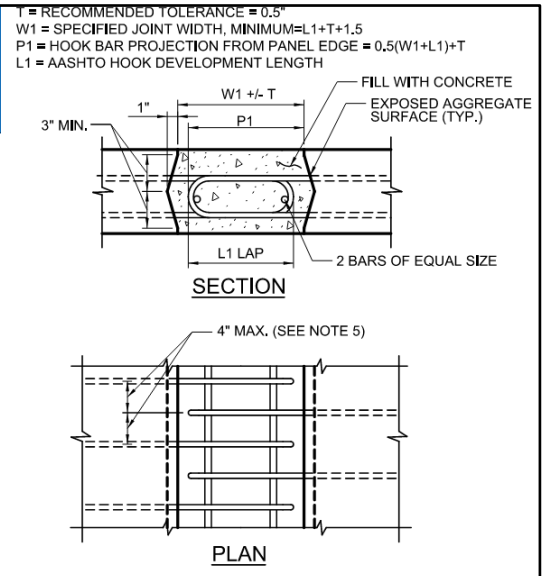

HOOKED BARS WITH CONCRETE

Our first design example will cover the design of a closure joint with 4ksi concrete. The details shown is taken from the PCI Northeast Guide Details. As previously discussed, the design requires #5@6” on top and #5@8” on the bottom. In order to use continuous hook bars, we will hold the same bar spacing on top and bottom, which is #5@6”.

We will design the connection to fully develop these bars, which will meet the requirements for an emulative design. Another approach would be to calculate the bending moments at the joint, and design for the actual forces. In most cases, it is desirable and recommended that the joint simply be designed for the capacity of the section.

Example: Precast FDDP Design

Closure joint with hooked bars:

Lap length =

AASHTO Hook Dev. Length l_{hb} = 11.9”

Say 12”

3.6.2.2—Hooked Reinforcing Bars in Closure Joints

Hooked bars may be lapped within the closure joint. The minimum length of the lap between adjacent hooked reinforcing bars shall be equal to the hook development length, l_{hb}, specified in *AASHTO LRFD Bridge Design Specifications*. The detailing of the hooks shall include at least one transverse bar of equal size set within the inside radius and in contact with each hook, which would require a minimum of two transverse bars per lapped hook connection.

In a non-contact hooked bar splice, the center-to-center spacing of the spliced bars shall not exceed 4 inches.

C3.6.2.2

The *AASHTO LRFD Bridge Design Specifications* are silent with regard to provisions for lapped hooked bars; however the provisions of this article have been successfully used by Designers for many years in conventional construction. The typical adjustments for lap splices outlined in the *AASHTO LRFD Bridge Design Specifications* are based on straight lapped reinforcing bars. The failure mechanism of hooked bars is different than straight bars, therefore the provisions for lap spliced bar need not be applied. Testing by French et al. (2011) Brush (2004) and Sheng et al. (2013) has shown that the standard development length of a hooked bar is adequate. These tests included the use of a bearing bar within the hook.

This requirement is consistent with testing noted above. Uniform projecting bar spacing is recommended with a maximum spacing of 8 inches on center in each element (see Figure 3.6.2.2-1). By using this approach, the maximum spacing requirement should not be exceeded even after accounting for tolerances. If an element is placed in an offset (but within tolerance) location, the maximum non-contact lap spacing of one adjacent bar

The first step in the process is to calculate the AASHTO LRFD hook development length for the bars.

For the sake of expediency, we will not go through all the calculations required , since it is standard design practice.

The value calculated for the number 5 bars is 11.9 inches. We will round that number to an even 12 inches.

The Guide Specification Article 3.6.2.2 requires that the maximum non-contact spacing of bars be kept to less than 4 inches. In our example, the bars are spaced at six inches within the panel. This means that the maximum spacing to the nearest adjacent bar will be 3 inches or less, therefore we meet this provision.

Example: Precast FDDP Design

Joint design and details:

Use PCI Northeast Guidelines (www.pcine.org)

Lap length = L1 = 12”

T = Use a tolerance of 1/2”

Specified joint width = W1 = L1+T+1.5 = 14”

Length of projecting hook = P1 = 0.5(W1+L1)+T

= 13.5”

Place 2-#5 in hooks

Similar design for transverse closure joints

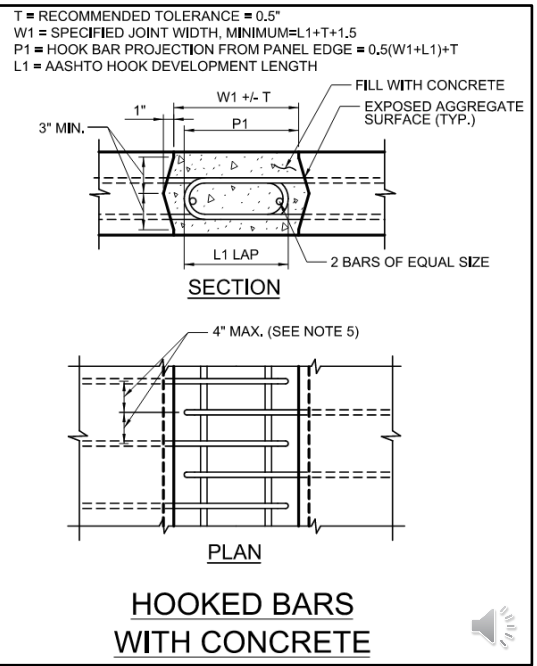

The next step in the process is to detail the joint. The Guide Specifications for ABC require that the designer account for tolerances in the design. The PCI Northeast Guide Details include provisions to accomplish this. These provisions are based on the guidelines for tolerances developed under NCHRP Project 12-98.

The specified joint width is equal to the lap length plus tolerances plus 1.5 inches. The 1.5 inch additional width is to facilitate the fit-up of the panels and to accommodate the tolerance. For this example, will use a joint width tolerance of 1/2 inch. We have already calculated the required lap length, which equals 12 inches. Using the PCI equations we can calculate the specified joint width, which equals 14 inches. The PCI details also include equations for the length of the projected bar from the edge of the panel. This length is calculated at 13.5 inches. It is imperative that the design specify the joint width, width tolerance, and the length of the projecting bars. Otherwise, there is potential for loss of geometry or inadequate lap splices.

Article 3.6.2.2 of the AASHTO Guide specifications for ABC require that one bar of equal size be placed within the hooks, therefore 2 #5 bars are shown.

This demonstrates how easy it is to design a connection between two panels using The AASHTO Guide Specifications for ABC.

Example: Precast FDDP Design

Closure joint with UHPC:

- Use PCI Northeast Guidelines (www.pcine.org)
- Need: Lap length to complete the detail

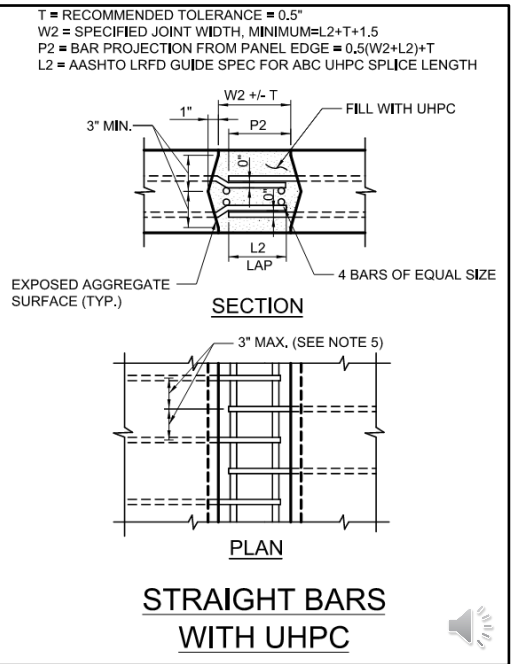

Now we will design the same joint made with UHPC. Again, we will be using the PCI Northeast Guide Details. The details shown to the right is taken from those guidelines. It is similar to the hooked bar detail in that equations have been developed for the joint width and bar projections to accommodate tolerances.

In order to complete the detail we simply need to calculate the lap length for the number 5 bars.

Example: Precast FDDP Design

Closure joint with UHPC:

Dev. length = 8 d_b

Bottom cover = 1.5”

$2d_b \leq$ min clr. Cover < $3d_b$

Therefore add 2db

Total dev. length = 10 db = 6.25”

3.6.2.4.1—Development of Deformed Reinforcing Bars in Tension in UHPC

The basic development length for straight or hooked deformed bars cast into UHPC, l_{dtu}, shall satisfy:

For reinforcing bars with:

$f_y \leq 75$ *ksi*

$$l_{dtu} \geq 8d_b \qquad (3.6.2.4.1\text{-}1)$$

where:

d_b = nominal diameter of bar (in.)
f_y = specified yield stress of reinforcing bars (ksi)

For reinforcing bars with:

$75 \text{ ksi} < f_y \leq 100 \text{ ksi}$

$$l_{dtu} \geq 10d_b \qquad (3.6.2.4.1\text{-}2)$$

where all of the following criteria are met:

- Field cast UHPC shall contain a minimum of 2 percent (by volume) steel fiber reinforcement
- The minimum compressive strength of the UHPC shall be greater or equal to 14 ksi;
- Bar size shall not exceed No. 8;
- Clear cover for the bar shall not be less than $3d_b$;

The basic development length, l_{dtu}, shall be increased by $2d_b$ if:

$2d_b \leq$ *minimum clear cover* $< 3d_b$

C3.6.2.4.1

These provisions are applicable for all types of steel reinforcement and for epoxy coated bars. Adjustments noted in the *AASHTO LRFD Bridge Design Specifications* are not applicable to these provisions including increases in development length for epoxy coated bars.

The values for straight bars are conservatively used for hooked bars based on limited testing on hooked bars in UHPC.

The compressive stress of 14 ksi is set to facilitate the use of UHPC in accelerated construction when early application of construction loads to newly completed connections is advantageous. The specified minimum compressive strength at 28 days should still be specified.

The limitation on bar size is based on limited testing data on larger bars.
A decrease in the cover results in reduced confinement of the bar and thus an increase in the required development length.

We will use Article 3.6.2.4.1 of the Guide Specifications for ABC for this design.

The first step is to calculate the development length of the number 5 bars. For grade 60 bars, this is simply equal to or greater than eight bar diameters. This provision requires additional development length if the minimum clear cover is between two and three bar diameters. The specified cover for this example equals 1.5 inches, therefore we must add two bar diameters to the development length.

Therefore, the total development length is equal to 10 bar diameters , or 6.25 inches.

Example: Precast FDDP Design

Lap length with UHPC:

= 0.75 ldtu

= 0.75 * 6.25”

= 4.68” say 5”

3.6.2.4.2—Splices of Lapped Reinforcing Bars in Tension in UHPC

The splice length of straight and hooked deformed reinforcing bars l_{su} in tension that are cast into UHPC shall satisfy:

$$l_{su} \geq 0.75 l_{dtu} \qquad (3.6.2.4.2\text{-}1)$$

where all of the following criteria are met:

- The maximum space between adjacent spliced bars in a non-contact lap splice shall not exceed l_{su}.
- Precast component interfaces onto which the field-cast UHPC will bond shall be detailed to include shear keys that project into the prefabricated element with exposed aggregate or roughened finish.

C3.6.2.4.2

Research by Graybeal et al. (2010) has demonstrated that passive reinforcement embedded into a connection and spliced with adjoining bars to have a lap of $0.75 l_{dtu}$ sustain static and cyclic loads that cause rupture of the reinforcing bar outside of the connection.

The values for straight bars are conservatively used for hooked bars based on limited testing on hooked bars in UHPC.

The shear key facilitates compression strut transfer of applied loads without relying on dowel action of reinforcing bars.

Article 3.6.2.4.2 of the Guide Specifications for ABC covers the tension lap splice requirements for reinforcing bars in UHPC.

This value is simply 0.75 times the bar development length.

For this example the required lap length is equal to 4.68 inches. We will round up to an equal 5 inches.

Example: Precast FDDP Design

T = RECOMMENDED TOLERANCE = 0.5"
W2 = SPECIFIED JOINT WIDTH, MINIMUM=L2+T+1.5
P2 = BAR PROJECTION FROM PANEL EDGE = 0.5(W2+L2)+T
L2 = AASHTO LRFD GUIDE SPEC FOR ABC UHPC SPLICE LENGTH

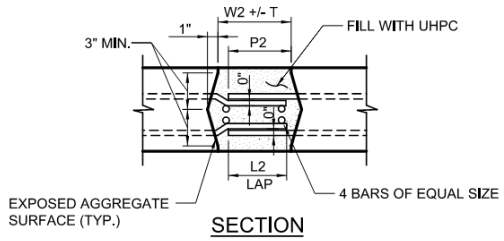

SECTION

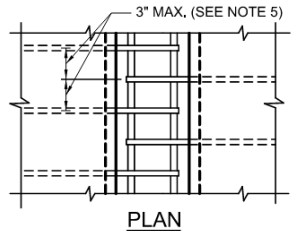

PLAN

STRAIGHT BARS WITH UHPC

Closure joint with UHPC:

- Use PCI Northeast recommended detail
- www.pcine.org

W2 = specified joint width = L2+T+1.5”
= 5”+ 0.5” + 1.5”
= 7”

P2 = 0.5(W2+L2)+T = 0.5(7+5)+0.5” = 6.5”

Similar design for transverse closure joints

Given this information we can now detail the joint. Again, PCI Northeast has developed an equation for this detail.

The specified joint width is equal to the lap length plus tolerances plus 1.5 inches. The 1.5 inch additional width is the facilitate the fit-up of the panels and to accommodate the tolerances. For this example, we will use a joint width tolerance of 1/2 inch. We have already calculated the required lap length, which equals 5 inches. Using the PCI equations we can calculate the specified joint width, which equals 7 inches. The PCI details also include equations for the required specified length of the projected bar from the edge of the panel. This length is calculated at 6.5 inches.

This again demonstrates how easy it is to design a connection between two panels using the Guide specifications for ABC.

The preceding two examples are for connection of the main reinforcing bars in the deck. The design of transverse joint connections would be similar. The designer would simply design the connection to fully develop the required distribution reinforcing.

Example: Precast FDDP Design

Shear connectors

3.6.8.3—Connection of Deck Panels to Supporting Elements

Precast concrete deck panels may be made composite with the supporting beams through shear connectors placed in grouted pockets within the panels. The design of the shear connectors is similar to the design of shear connectors in bridges with cast-in-place concrete decks. The only design variation is that the spacing of the shear connectors is dictated by the spacing of the pockets in the panels. Variations in horizontal shear resistance are accomplished by varying the number of shear connectors within each pocket.

C3.6.8.3

Numerous research studies have been completed on the behavior of precast deck panel composite action. The PCI document *State of the Art Report on Full-Depth Precast Concrete Deck Panels* includes a myriad of references to previous studies regarding deck panel connections to various types of girders. These studies have shown that the precast deck panels with discrete shear connector pockets can emulate cast-in-place concrete composite decks.

The next step in the design process is to connect the deck to the beams to provide composite action. There has been much research on this aspect of ABC design. Article 3.6.8.3 of the Guide Specifications for ABC covers this by requiring that shear connector be placed in pockets within the panels. Placing shear connectors in a closure joint area above the beams would also meet this provision.

The design of the shear connectors is similar to the design of shear connectors in bridges with cast-in-place concrete decks. The only variation is that the spacing of shear connectors is dictated by the spacing of the pockets in the panels. Variations in horizontal shear resistance are accomplished by varying the number of shear connectors within each pocket.

Example: Precast FDDP Design

Shear connector pocket options

- PCI Northeast details

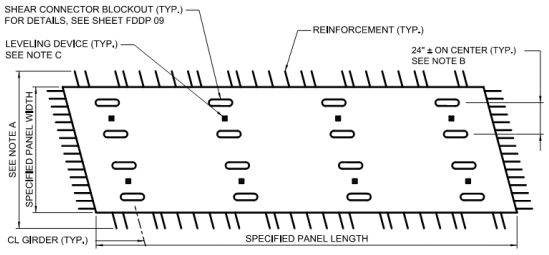

TYPICAL PRECAST CONCRETE DECK PANEL
SKEWED PANEL

TYPICAL PANEL PLAN - STANDARD BLOCKOUTS

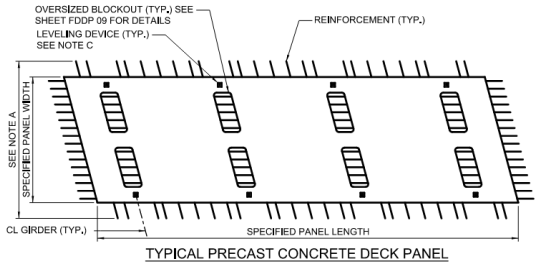

TYPICAL PRECAST CONCRETE DECK PANEL
SKEWED PANEL

TYPICAL PANEL PLAN - OVERSIZED BLOCKOUTS

There are various pocket options in use in the United States. The most common is small pockets placed at regular intervals, typically 2 feet on center. One issue with smaller pockets is that they can only accommodate a limited number of shear connectors. As previously stated, the PCI Northeast Bridge Technical Committee has developed details for larger pockets. The reinforcing bars in the panel pass through these pockets in order to maintain relatively uniform bar spacing. This complicates fabrication to some degree, but it is feasible.

Example: Precast FDDP Design

Shear connector pocket options

- PCI Northeast details

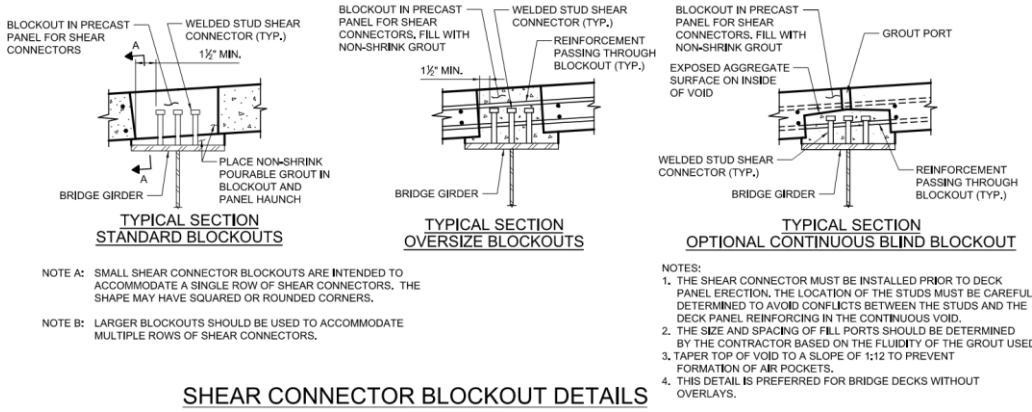

NOTE A: SMALL SHEAR CONNECTOR BLOCKOUTS ARE INTENDED TO ACCOMMODATE A SINGLE ROW OF SHEAR CONNECTORS. THE SHAPE MAY HAVE SQUARED OR ROUNDED CORNERS.

NOTE B: LARGER BLOCKOUTS SHOULD BE USED TO ACCOMMODATE MULTIPLE ROWS OF SHEAR CONNECTORS.

NOTES:
1. THE SHEAR CONNECTOR MUST BE INSTALLED PRIOR TO DECK PANEL ERECTION. THE LOCATION OF THE STUDS MUST BE CAREFULLY DETERMINED TO AVOID CONFLICTS BETWEEN THE STUDS AND THE DECK PANEL REINFORCING IN THE CONTINUOUS VOID.
2. THE SIZE AND SPACING OF FILL PORTS SHOULD BE DETERMINED BY THE CONTRACTOR BASED ON THE FLUIDITY OF THE GROUT USED.
3. TAPER TOP OF VOID TO A SLOPE OF 1:12 TO PREVENT FORMATION OF AIR POCKETS.
4. THIS DETAIL IS PREFERRED FOR BRIDGE DECKS WITHOUT OVERLAYS.

SHEAR CONNECTOR BLOCKOUT DETAILS

These are more details from the PCI Northeast Guidelines for various pocket configurations. The details on the left and center show the pockets previously described. The detail on the right shows a continuous blind pocket that is used by some states. The design of this pocket would be similar to the closure joint located over the flange that we previously discussed.

Shipping and Handling

2.4.1.1 Shipping and Handling

All prefabricated elements shall be analyzed for shipping and handling forces during fabrication, shipping and erection.

The following load combinations shall be used for shipping and handling calculations:

Service I = γ_hDL (2.4.1.1-1)
Strength I = γ_p γ_h DL (2.4.1.1-2)

where:

γ_h = dynamic dead load factor for handling of prefabricated elements.
γ_p = dead load factor as specified in the *AASHTO LRFD Bridge Design Specifications*

The following values for γ_h are recommended:

C2.4.1.1

The Contractor is typically responsible for shipping and handling of elements, since there are many ways to lift and secure an element during fabrication and erection (see Article 1.4.2). For example, a deck panel can be lifted with a 4 point pick with sloped slings, or an 8 point pick with a spreader beam. Both methods can be acceptable, however the stresses imparted in the element would be different. Therefore, the handling of prefabricated elements should fall under the realm of "contractor means and methods".

All of these provisions are not applicable to girders (form finish), however values for yard handling and shipping may be used. Special care needs to be exercised with girder shipping and handling methods, especially with regard to long slender elements that may tip or buckle during shipping and handling (PCI, 2016).

As previously discussed, the design for shipping and handling of prefabricated elements is the responsibility of the contractor or fabricator. The Guide Specifications for ABC recommend that the designer specify this in the contract documents.

Since the guide specification is designed to cover design and construction, provisions for calculating shipping and handling are included for the contractor's use. They are also provided to assist the designer in review of contractor's submissions.

The guide specification includes load factors for shipping and handling. These load factors are applied to the dead load to account for dynamic effects during shipping and handling. These load factors are in addition to the typical load factors specified in the AASHTO LRFD Bridge Design Specifications. The two factors are multiplied by each other and applied to the dead load calculations.

Shipping and Handling

1. Dead load factors for removal of precast elements from forms:

Form finish	γ_h
Flat, with removable side forms no false joints or reveals	1.3
Flat, with false joints and/or reveals	1.4
Fluted with proper draft (tees, channels, fluted panels)	1.6
Sculptured	1.7

The values contained herein are based on the *Precast/Prestressed Concrete Institute Design Handbook* MNL-120 (2010).

2. Dead load factors for yard handling and erection:
   $\gamma_h = 1.2$

3. Dead load factor for shipping:
   $\gamma_h = 1.5$

These values for handling, erection and shipping account for dynamic effects during construction. They would be applicable to prefabricated elements fabricated with any material (concrete, steel, etc.).

The dynamic download factors included in the Guide Specifications for ABC are based on the PCI Design Handbook. These factors have been used for years for the construction of precast elements in other industries.

There are different load factors used for different aspects of the fabrication and construction. The first set of load factors cover removal of precast elements from forms. As you can see, the finish of the concrete against the form has a significant effect on the forces required to lift the elements from the forms.

The next factor covers the dynamic load adjustment during handling of the element in the yard and at erection. The last load factor covers shipping of the element over the road.

While these factors were developed for precast concrete, it would be applicable to use the same factors for other materials such as structural steel.

Handling to Prevent Damage

8.4—SHIPPING AND HANDLING CALCULATIONS

The Contractor shall be responsible for the analysis of element for shipping and handling. The calculation of forces and the analysis of the elements shall be according to Section 2 of this specification. The Contractor is also responsible for maintenance of stability of the elements during shipping and handling.

If shipping and handling forces cannot be resisted by the as-designed element, the Contractor shall modify the lifting and handling methods or in the case of reinforced concrete element, add supplemental reinforcement to resist shipping and handling forces.

Shipping and handling calculations shall be submitted to the Designer as a working drawing for review.

C8.4

The process of handling and shipping elements will induce load effects into the elements. In some cases, the element will be shipping in a different orientation than in the completed structure (i.e. columns). In most cases, the elements will not need special care, since they are designed for much larger forces.

Article 8.4 of the Guide Specifications for ABC outlines a requirement for contractor design for shipping and handling. This article notes that the contractor may need to modify the lifting and handling methods for reinforced concrete elements if the specified stresses cannot be met.

Handling Precast Concrete

8.4.2—PRECAST CONCRETE ELEMENTS

Precast concrete elements are susceptible to cracking during shipping and handling. The analysis of precast concrete elements shall include analysis for service limit state as well as the strength limit state as specified in Section 2 of this specification.

The maximum allowable tensile stresses in the elements at the service limit state shall be limited to the modulus of rupture divided by 1.5. The compressive strength used in this calculation shall be commensurate with the strength of the concrete while the element is being handled.

The handling of large thin panels shall account for the tributary distribution of the lifting forces within the panel.

C8.4.2

The value of 1.5 is a factor of safety that is considered acceptable to provide an element with no discernable cracking, but does not guarantee that the element will not crack. In most cases, a precast element would be removed from the forms prior to the concrete reaching the final design strength. Therefore the analysis should be based on the strength of the concrete at the time of movement.

Special care should be exercised with large precast concrete deck panels. These panels are more sensitive to shipping and handling forces since they are only designed to span between beams. Often the blocking span can far exceed the beam spacing, leading to large shipping and handling forces. The *Precast/Prestressed Concrete Institute Design Handbook MNL-120* (2010) is recommended for use in developing shipping and handling calculations.

There have been documented cases where larger deck panels have cracked during construction. Designers should consider specifying prestressing in these panels to control tensile stresses during shipping and handling.

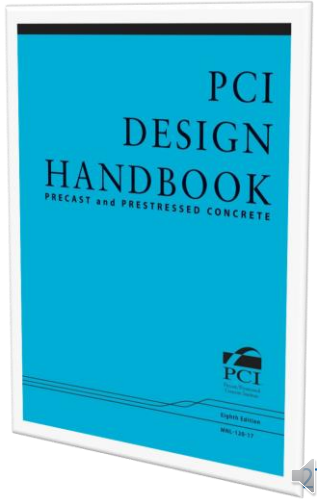

Article 8.4.2 of the Guide Specifications for ABC recommend that the maximum allowable tensile stress in the concrete elements at the service limit state be limited to the modulus of rupture divided by 1.5. This recommendation is taken from the PCI Design Handbook to provide “no discernible cracking“ in the element.

This provision also recommends that calculations for shipping and handling be based on the requirements in the PCI Design Handbook.

Example: Lifting Analysis

Example panel

- 8’ x 21’ panel, 8” thick
- Large blockouts
  - 24” x 12”
- Check for stresses during removal from form

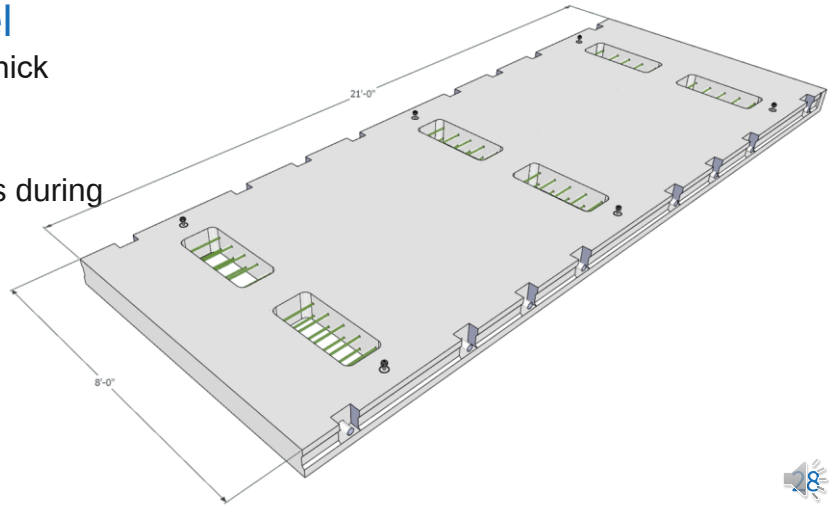

We will now demonstrate an example of shipping and handling calculations for a precast concrete full-depth deck panel. The panel for this example is 8 feet wide , 21 feet long , and eight inches thick.

We will use large shear connector blockouts for this panel to emphasize the effect on the design. The blockouts for this example are 24 inches by 12 inches.

For this example we will check the stresses exerted on the panel during removal from the forms. In most cases, this will control the design for shipping and handling.

Example: Lifting Analysis

PCI Design Handbook

- Analysis equations for panels

(a) Four-point pick-up maximum moments

w = weight per unit area

Locations shown for equal pick loads

$+M_x = -M_x = 0.0107wa^2b$

$+M_y = -M_y = 0.0107wab^2$

M_x resisted by a section of width $15t$ or $b/2$, whichever is less

M_y resisted by a section of width $a/2$

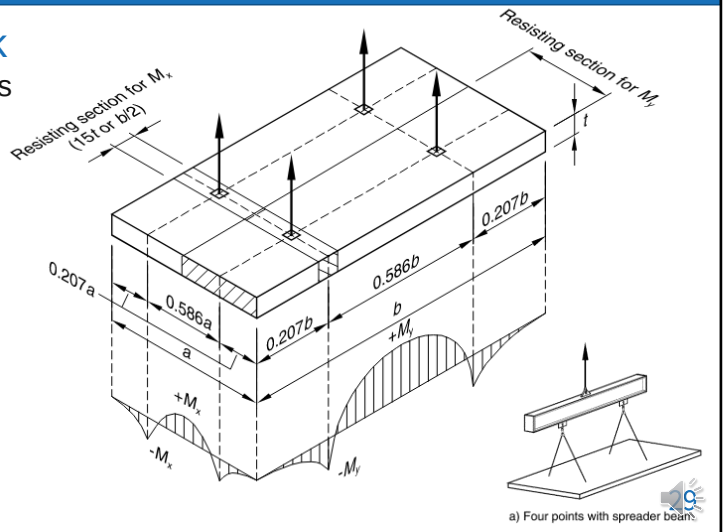

The PCI design Handbook has handy equations for locating lifting point locations and for calculating bending moments and panels with those lifting locations.

The diagram to the right shows the recommended lifting points that will produce equal positive and negative bending moments in the panel. It also shows the width of section that resists the bending moments calculated. Additionally, equations for the bending moments are included to the left.

The fabricator does not necessarily need to lift the panel as shown. Alternate lifting locations can be used, however the lifting engineer would need to calculate the bending moments using standard structural engineering principles.

Example: Lifting Analysis

Pick point locations

- Distance from end = 0.207*21’ = 4.3’
- Distance from side = 0.207*8’ = 1.7’
- +Mx = -Mx = 0.0107wa2b

W = weight per unit area
= .667*150 = 100 psf
a = panel width = 8’
b = panel length = 21’

Load factor for stripping = 1.3
Therefore, +Mx = -Mx = 1438 ft# * 1.3 = 1869 ft#

+My = -My = 0.0107wab2
= 3775 ft# * 1.3 = 4908 ft#

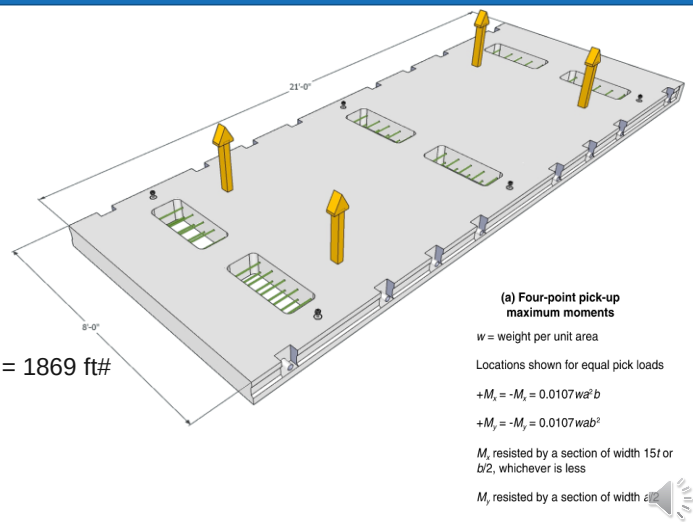

For our example the distance from the end of the panel to the pick point will be 0.207 times the panel length which equals 4.3 feet.

The distance from the side of the panel to the pick point will be 0.207 times the panel width which equals 1.7 feet. The sketch to the right shows these pick locations to scale.

The bending moment in the X direction is calculated using the PCI equation. The input for the equation is the weight per unit area, the panel width, and the panel length. We will use a load factor of 1.3 for stripping of the panel from the form, which was previously discussed.

Based on this, the maximum positive and negative moment in the X direction equals 1869 ft#.

The maximum positive and negative moment in the y direction is similarly calculated and equals 4908 ft#.

Example: Lifting Analysis

Section analysis for Mx

- Section width = minimum of 15t or b/2 = 112”
- Mx = 1869 ft# = 22428 in#
- Section modulus (Sx) = 112*82/6 = 1195 in3
- fb = Mx /Sx = 22428/1195 = 19 psi

- Allowable stress = fr / 1.5
- AASHTO LRFD BDS Article 5.4.2.6
  fr = 0.24 √ f’ci
  Assume f’ci = 5ksi, therefore,
  fr = 0.536 ksi = 536 psi
  Allowable stress = fr / 1.5 = 357 psi
- 357 > 19 ➡ ok

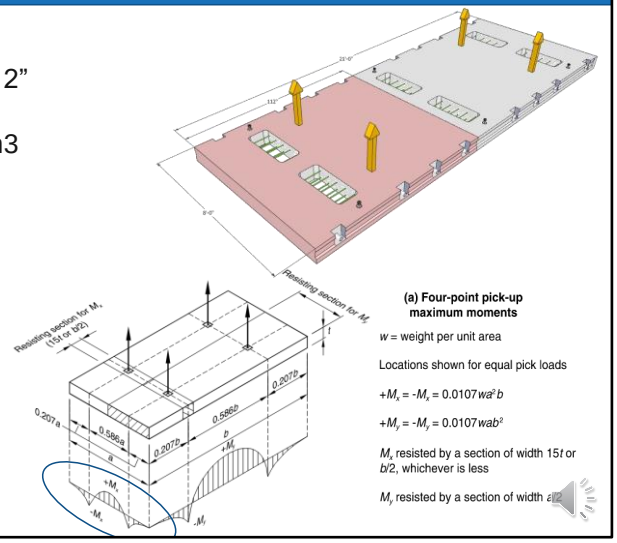

We will first analyze the panel for moments about the X direction, or Mx. The isometric detail from the PCI design handbook shows the moment diagram and the resisting section for Mx.

The resisting section width is the minimum of 15t or b/2 = 112 inches in our example. Mx was previously calculated at 1869 ft#, which equals 22428 in#. The Section modulus resisting the moment is $112*8^2/6$, which equals 1195 in^3. Therefore, the stress in the panel during lifting equals 19 psi. This may seem like a small number, which it is, since the major bending forces are accommodated in the other direction.

The next step in the process is to calculate the allowable stress, which is recommended to be the modulus of rupture divided by 1.5. The modulus of rupture is specified in the AASHTO LRFD Bridge Design Specifications in Article 5.4.2.6. We are using the initial concrete strength for this calculation since this lifting occurs during form stripping when the concrete is still young. Using that article, the modulus of rupture is equal to 536 psi. From that the allowable stress for lifting would equal 535 divided by 1.5, which equals 357 psi.

The allowable stress level is much higher than the actual lifting stress therefore bending about the X direction is acceptable.

Example: Lifting Analysis

Section analysis for My

- Section width = a/2 = 48”
- My = 4908 ft# = 58,896 in#
- Section modulus (Sy): Subtract hole for width value
  W = 48”-24” = 24”
  S = 24*82/6 = 256 in3
- fb = My /Sy = 58,896/256 = 230 psi

Allowable stress = fr / 1.5

- AASHTO LRFD BDS Article 5.4.2.6
  fr = 0.24 √ f’ci
  Assume f’ci = 5ksi, therefore, fr = 0.536 ksi = 536 psi
  Allowable stress = fr / 1.5 = 357 psi
- 357 > 230 ➡ ok

- This process should be repeated for shipping and handling
- Use applicable load factors and concrete strengths

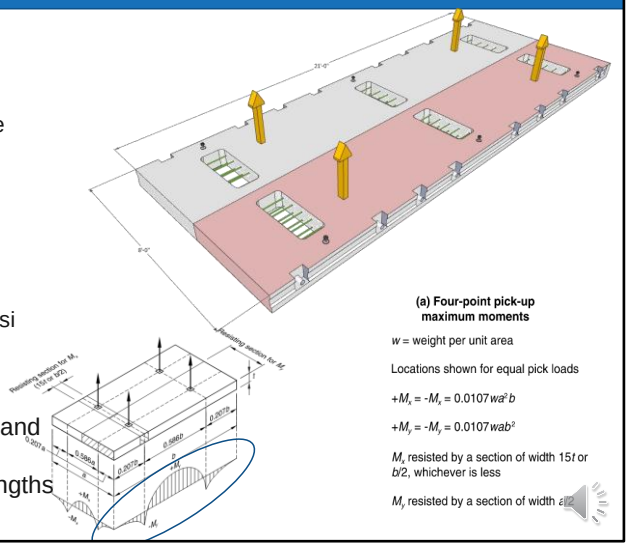

A similar approach is taken for bending about the Y direction. The section resisting these forces is equal to the panel width divided by two.

The isometric diagram shows the bending diagram for this direction. The calculations are similar to the previous calculations. The difference in this calculation is that the center pocket is located at the point of maximum positive moment. To accommodate this, the width of the pocket is subtracted from the width of the section in the calculation of the section modulus.

For this direction, the calculated bending stresses equal 230 psi. The same allowable stress calculation is used for the resistance, which is 357 psi.

Again, the applied stresses are less than the resistance, therefore the section is adequate.

Similar calculations would be required for different aspects of shipping and handling such as during transportation. In this case the final concrete strength would most likely be applicable.

Example: Lifting Analysis

What do you do if this check fails?

- Use more pick points
- Shift pick points
  - The PCI equations would not be applicable
  - A simple 2D analysis would be required
- Add concentric prestressing to reduce tensile stress in panel

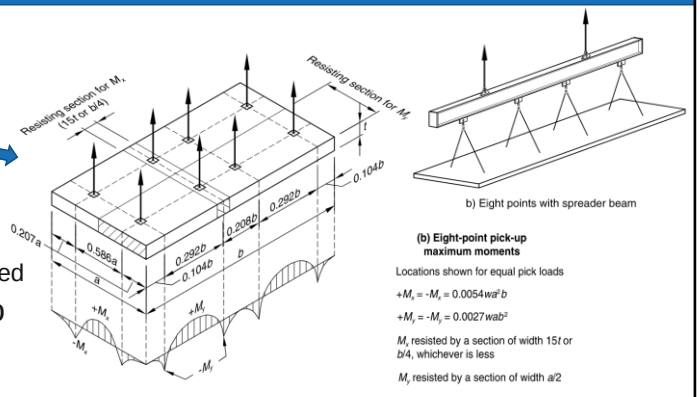

These calculations should be completed by the Contractor and checked by the designer

In the previous example the resistance to forces about the Y direction was very close to the allowable. Therefore, we need to ask, what would the contractor do if the stresses exceeded the allowable stresses?

There are several options to this scenario. The first option would be to use more pick points to reduce the bending moments in the panel. The PCI Design Manual includes equations for an eight point pick. A review of the bending moment equations for this pic shows that the moments are significantly lower than previously calculated.

The second option for this scenario is to shift the picked points from the previous calculations. The location of the blockout at the point of maximum moment could be problematic. By shifting the pick points closer to the center of the panel, the forces at the center would be reduced. The forces at the pick point would be increased, however that section does not have a blockout. This approach would require the lifting engineer to calculate bending moments using standard structural engineering principles.

The third option would be to add concentric prestressing to the panel to reduce the tensile stresses during lifting. If this was done, the calculated tensile stresses would be reduced by the prestress.

- Link Slabs
  - Uses in ABC
  - Skew Effects
  - Design Example

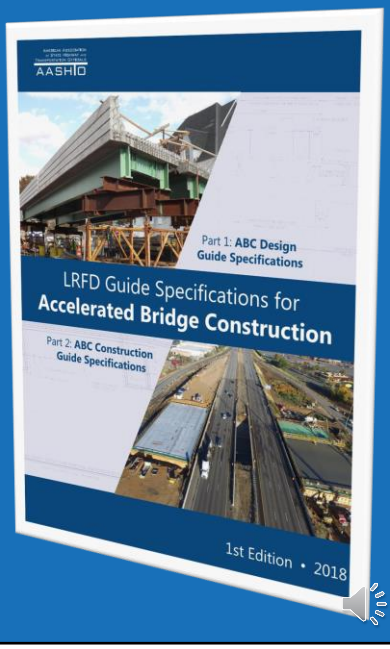

This next section covers the subject of Link Slabs. We will explore their uses in ABC, provisions in the AASHTO LRFD Guide Specifications for ABC, the impact of skew on the design, and a design example for an ABC project.

Uses in ABC

93 Fast14, Medford, MA

- Modular Decked Beams

Link Slabs were developed many years ago for use in the prestressed concrete bridge industry. Link slabs allow designers to create jointless bridge decks without beam continuity.

It is common to design and build prestressed concrete bridges using span-by-span construction. Some designers eliminate deck joints by making the beams continuous for live load. Others design jointless bridges with links labs connecting each span, but without beam continuity.

The photos on this slide shows the use of links labs for steel bridges. The 93Fast14 Project in Medford, MA included the design of 13 multi-span bridge superstructures detailed using span-by-span construction. There was one other single span bridge in the project. All 14 bridge superstructures were build in ten 55 hour work periods.

Span-by-span construction was chosen to eliminate the need for bolted beam splices which are both time consuming and expensive. The photo in the upper left shows the modular decked beam elements that were used. They consisted of two steel beams with a precast concrete deck cast in the fabrication shop. Longitudinal closure joints were detailed between the beam elements. Link slabs were used at the beam ends. The photos on the right and the bottom show the completed structures, which carry over 170,000 vehicles per day. These bridges are performing well after nine years, which is a testament to the performance of link slabs.

Uses in ABC

Commonwealth Avenue, Boston

- Precast full-depth deck panels
- 3 Spans, Heavily Skewed

Link slabs Can also be used in conjunction with full-depth precast concrete deck panels. These photos show the Commonwealth Ave bridge project in Boston, MA. This project involves the full replacement of a large three-span bridge over Interstate 90. The spans were too long for modular deck beams, therefore conventional steel girders were used combined with the precast deck panels.

As with the 93Fast14 project, construction of bolted splices over live traffic was not an option. Span-by-span construction was used to expedite the erection of the steel girders. Link slabs were used to provide a jointless deck.

Section 3: Link Slab Connections

3.6.9—LINK SLABS

Links slabs shall be designed to resist dead load and live load (deck) forces as well as forces induced by beam end rotation. Links slabs can be used for steel beam superstructures and concrete beam superstructures.

In general, link slabs can be designed and detailed with normal deck concrete.

The detailing of link slabs involves the debonding of a portion of the bridge deck at the ends of the spans. Designers need to verify the design of the beam in this zone based on non-composite action.

The skew of the bridge may be neglected in link slab design.

C3.6.9

Links slabs are a means of providing a jointless bridge without continuity. The deck is continuous across the substructure element, but the supporting beams or girders are not. The basic design approach for link slabs is to design them to accommodate anticipated beam end rotations (Caner, A. and Zia P. 1998).

Links slabs are applicable to accelerated bridge construction because they allow for the use of span-by-span construction as opposed to span continuity. This provides the potential to build multi-span jointless bridges quickly without the need for girder splicing or casting of integral end diaphragms. Modular deck beam bridges are particularly well suited for this technology.

Special concrete mixes with favorable properties have been used by some agencies. Designers should consider the impacts of special mixes on the construction process and the cost implications of special mixes (Li et al. 2005).

In most cases, a non-composite section at the ends of a bridge can be accommodated in the design, since the bending moments are small at the non-continuous beam ends.

Studies have shown that in general, the bending moments in link slabs decreases with increases in bridge skew (Aktan et al. 2011). In general, reductions were found to be limited for skews up to 20 degrees and more pronounced for higher skewed bridges. Based on this study, it is conservative to assume zero skew in the design of link slabs.

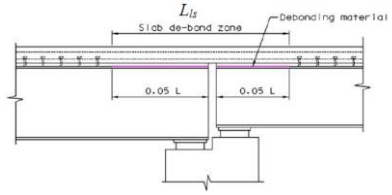

Article 3.6.9 of the Guide Specifications for ABC includes provisions for link slab design. These provisions were based on research completed in 1998 for prestressed concrete girder bridges. The theory presented is not specific to the type of beam being connected, therefore link slabs can be specified for steel bridges as well.

The theory with link slabs is that they are designed to accommodate he live load and composite dead load beam end rotations without significant cracking. The design of the link slab is similar to the design of a composite deck in a continuous bridge girder. The goal is to keep the stresses in the link slab below the modulus of rupture for the deck concrete.

In order to control the magnitude of bending in the link slab, a portion of the slab is debonded from the girders.

The skew of the bridge may be neglected in link slab design. Research has shown that skew actually reduces beam end rotations in the link slabs. This is due to three dimension deflection effects, where the deflection span is actually closer to the perpendicular span length between the supports. If the girder span is used in the calculations, the calculated beam end rotations will be conservative.

Section 3: Link Slab Connections

3.6.9.1—Primary Reinforcement

The primary reinforcement shall be designed and detailed to resist dead load and live load forces as specified in the *AASHTO LRFD Bridge Design Specifications*, including the provisions for deck overhangs.

C3.6.9.1

In a typical bridge with longitudinal beams or girders, the primary reinforcement runs transversely across the bridge deck. The design of this transverse reinforcement is not different than the design of normal deck reinforcement. The design of the transverse reinforcement should account for the overhang forces including barrier impacts.

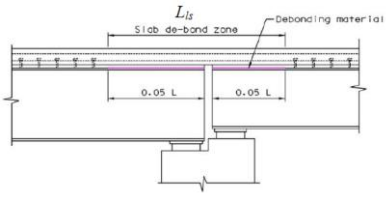

Article 3.6.9.1 of the Guide Specifications for ABC notes that the primary reinforcement for the deck, which runs transverse to the girders, need to be included in the link slab region. The design of this reinforcement is the same as the portions of the slab along the girder.

You will note that there is no support of the deck between the girders by end diaphragms. This type of support is typically used for free edges of decks. A link slab is a continuous deck, therefore it can be treated similar to a continuous girder bridge.

Section 3: Link Slab Connections

3.6.9.2—Link Slab Reinforcement

Longitudinal link slab reinforcement shall be designed to resist the induced rotations in the adjacent beams.

Link slabs shall not be assumed to provide any continuity of composite dead loads or live loads.

The link slab shall be detailed as non-composite for full depth precast deck panels over its entire length through the use of a physical bond breaker between the link slab and the supporting beam. The minimum recommended length of the link slab shall be equal to the total of 5 percent of each span length that is connected to the link slab, measured from the end of the supporting beams.

C3.6.9.2

Link slab reinforcement is not designed for typical live load forces. Instead, it is designed to accommodate the beam end rotations. The rotation of the beams leads to forces that are result of the stiffness of the link slab.

Link slabs do not provide measurable resistance to negative bending moments, and their stiffness is significantly less than the adjacent composite beams, therefore the joint can be assumed to be a theoretical pinned connection. This approach is similar to the assumption made with the design of an integral abutment bridge.

Figure C3.6.9.2-1 shows a typical link slab debond zone.

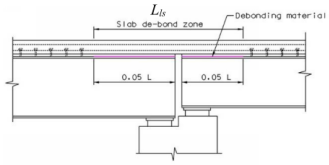

Figure C3.6.9.2-1—Links Slab Debond Zone

Article 3.6.9.2 of the Guide Specification includes provisions for the design of the reinforcement that is running parallel to the girders, which is noted as the “link slab” reinforcement.

The design of this reinforcement needs to resist the induced rotations in the adjacent beams. This provision also notes that links labs are not used to provide continuity for composite dead loads or live loads.

This provision also notes that the slab should be debonded for a distance equal to 5% of the span length of each adjacent girder. This is based on the research that led to these provisions. As you will see in the following slides, this length helps reduce the bending moments acting on the link slab.

Section 3: Link Slab Connections

The design bending moment in the link slab per beam M_{ls} shall be calculated as follows:

$$M_{ls} = 2E_{ls}I_{ls}\Theta/L_{ls} \qquad (3.6.9.2\text{-}1)$$

where:

E_{ls} = modulus of elasticity of the link slab (ksi)
I_{ls} = moment of inertia of the link slab using gross gross section properties (in.^{4})

The design bending moment can be derived from the theory that the slab is fixed at each end of the link slab. A rotation is applied to the slab from either end resulting in a maximum bending moment at the fixed end. Figure C3.6.9.2-2 shows the free body diagram for this situation.

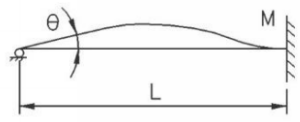

Figure C3.6.9.2-2—Links Slab Free Body Diagram

The provisions include an equation to calculate the bending moment in the link slab due to an induced beam and rotation. The equation is based on the free body diagram shown in Figure C3.6.9.2-2.

There are several key terms in the equation that can affect the magnitude of the moment in the slab. The first is the modulus of elasticity. One might think that high-strength concrete would be preferable, however, this would increase the modulus of elasticity along with the bending moment in the slab.

Another key term is the moment of inertia of the slab. This is equal to $b*t^3/12$. We have seen designs where engineers have thickened the link slab region in order to improve performance. This can lead to much larger bending moments in the slab, which could decrease the performance.

For example, if the slab thickness was doubled, the moment of inertia would increase by a factor of 8, while the section modulus, which is directly related to the bending resistance would only increase by a factor of 4. This could lead to increased cracking in the slab.

Link Slab Example

3-span bridge – Link slabs at the piers

- Spans = 113.39’ - 77’ - 86.57’
- Beam Spacing = 7.67’
- Deck Thickness = 8”
- f’c = 4 ksi

We will now go through the design example of a link slab using the following input:

The span arrangement for the example bridge is 113.39’-77’-86.57’.

The spacing is 7.67 feet.

The deck thickness is 8 inches.

The concrete strength in the slab is 4 ksi.

These values were taken from an actual bridge project built with link slabs.

Link Slab Design Approach

1. Design adjacent spans as simply supported
2. Determine the length of the debonded link slab using approximately 5% of each span length.
3. Determine the end rotations of the girders from the beam design under service live loads.
4. Calculate the negative moment in the link slab due to service load rotations, Ma, using the gross section properties of the link slab.
5. Calculate cracking moment of link slab, Mcr [Ref. 1, AASHTO 5.7.3.6.2-2].
6. If Ma > Mcr then cracks can be expected in the link slab, then additional reinforcement is required.
7. Design the reinforcement for the link slab to resist the applied moment using working stress methods and check the control of cracking criteria per AASHTO LRFD Article 5.7.3.4.
8. Use a gamma value, γe, of 0.75 for Class 2 exposure condition.
9. The tensile stress in the reinforcement, fss, shall not exceed 0.60Fy.

The design approach for Link Slabs is straightforward. It makes use of the AASHTO LRFD Bridge Design Specifications for certain aspects of the design.

The steps for the design are as follows:

Review the list on the slide

Link Slab Design Approach

AASHTO LRFD BDS

5.6.7—Control of Cracking by Distribution of Reinforcement

Except for deck slabs designed in accordance with Article 9.7.2, the provisions specified herein shall apply to the reinforcement of all concrete components in which tension in the cross-section exceeds 80 percent of the modulus of rupture, specified in Article 5.4.2.6, at applicable service limit state load combination specified in Table 3.4.1-1.

The spacing, s, of nonprestressed reinforcement in the layer closest to the tension face shall satisfy the following:

$$s \leq \frac{700\gamma_e}{\beta_s f_{ss}} - 2d_c \qquad (5.6.7\text{-}1)$$

in which:

$$\beta_s = 1 + \frac{d_c}{0.7(h - d_c)} \qquad (5.6.7\text{-}2)$$

where:

β_s = ratio of flexural strain at the extreme tension face to the strain at the centroid of the reinforcement layer nearest the tension face

γ_e = exposure factor
= 1.00 for Class 1 exposure condition
= 0.75 for Class 2 exposure condition

d_c = thickness of concrete cover measured from extreme tension fiber to center of the flexural reinforcement located closest thereto (in.)

f_{ss} = calculated tensile stress in nonprestressed reinforcement at the service limit state not to exceed 0.60 f_y (ksi)

h = overall thickness or depth of the component (in.)

An important aspect of link slab design is to check for control of cracking in the link slab region.

The AASHTO LRFD Bridge Design Specifications includes provisions for control of cracking in Article 5.6.7.

The article notes that it is applicable to all concrete components in which tension in the cross section exceeds 80% of the modulus of rupture. The exception to this is the design of decks using the empirical method.

This article sets limits on bar spacing. An important variable is the exposure factor for the concrete. Since decks are highly exposed elements, the exposure factor for Class 2 is recommended. This article also sets a limit on the tensile stress in the reinforcement, which cannot exceed 0.6 f_y .

Link Slab Design Example

Check Live Load Moment vs. Cracking Moment in Link Slab

Span number	1 - 2		2 - 3	
Span length, ft	113.39	77.00	77.00	86.57
5%, ft	5.67	3.85	3.85	4.33
LL deflection, δ, in	0.998	0.473	0.473	0.509
LL rotation, θ, radians	0.00235	0.00164	0.00164	0.00157
Over pier…	(#1)		(#2)	
Clr between bearings, ft	2.00		2.00	
Total link slab length, ft	11.52		10.18	
Beam spacing, S, ft	7.67		7.67	
Deck thickness, d, in	8		8	
Link slab Id, in^4	3925		3925	
Deck f'c, ksi	4.000		4.000	
Deck Ec, ksi	3834		3834	
Ma, kip-in	511	357	404	386
Ma/S, kip-in/ft	67	47	53	50
Max. LL Ma, kip-in	67		53	
Modulus of rupture, fr, ksi	0.4800		0.4800	
Deck y_t , in	4		4	
Deck Mcr, kip-in	471		471	
Deck Mcr per foot, kip-in/ft	39		39	
C/D = Ma/Mcr	1.70		1.34	
Reinforcement design required?	**Yes**		**Yes**	

Link Slab Formulas:

$Id = b * h^3 / 12$

$Ec = 33{,}000 * w^{1.5} * \sqrt{f'c}$

$Ma = 2 * Ec * Id * \theta / L$

Modulus of Rupture Formulas:

$fr = 0.24 * \sqrt{f'c}$

$y_t = d / 2$

$Mcr = fr * Sd = fr * Id / y_t$

Crack Control Formulas:

$n = Es/Ec$

$\rho = As / (\text{bar spacing} * ds)$

$k = \sqrt{[2*\rho*n + (\rho*n)^2]} - (\rho*n)$

$j = 1 - k/3$

$fss = Ma / (As * j * ds)$

This slide includes a spreadsheet output for the example link slab design. the right side of the slide has the equations from the AASHTO LRFD Bridge Design Specifications and equations from working stress reinforced concrete design principles, which are used to calculate the stress in the bars near the tension face.

We will now go through the steps in the process:

1. The length of the link slab is calculated as 5% of the both spans.
2. The LL rotation is taken from the beam design.
3. The total link slab length is calculated as the sum of the previous numbers plus the distance between the bearings.
4. The moment of inertia of the link slab is $bh^3/12$, using the beam spacing (b) for the width of the section and 8” as the link slab thickness (h).
5. The modulus of elasticity is then calculated using standard AASHTO LRFD Bridge Design Specification equations.
6. The maximum bending moment is then calculated. The moment is calculated as the maximum for each beam end rotation. This approach is based on the assumption that the maximum rotations in each span will not occur simultaneously. One could add these together, but it is very conservative and not recommended.
7. The modulus of rupture and cracking moment is then calculated and converted to a “per foot” value.
8. The ratio of the applied moment to the cracking moment is then calculated. If the value is

greater than 0.8, then we need to design for crack control. In our case, both spans are over this limit.

Link Slab Design Example

Design Link Slab Reinforcement

Span number	1 - 2	2 - 3
Reinforcement design required?	Yes	Yes
Link slab top bar size, n	**6**	**6**
Link slab top bar spacing, in	**6.00**	**6.00**
Cover to face of bar, in	3	3
Distance to bar center, dc, in	3.375	3.375
Beta factor, βs	2.0	2.0
Bar As, in^2	0.88	0.88
Deck effective depth, ds, in	4.625	4.625
Modular ratio, n	8	8
Ratio of tension reinforcement, ρ	0.0317	0.0317
k-value	0.50	0.50
j-value	0.83	0.83
Stress in bar, fss, ksi	**20**	**16**
Bar yield stress, fy, ksi	60	60
0.60 * fy	**36**	**36**
Exposure factor, γe	0.75	0.75
Max. bar spacing, in	**6.31**	**9.79**
Actual bar spacing, in	**6.00**	**6.00**

Link Slab Formulas:

$Id = b * h^3 / 12$

$Ec = 33{,}000 * w^{1.5} * \sqrt{f'c}$

$Ma = 2 * Ec * Id * \theta / L$

Modulus of Rupture Formulas:

$fr = 0.24 * \sqrt{f'c}$

$y_t = d / 2$

$Mcr = fr * Sd = fr * Id / y_t$

Crack Control Formulas:

$n = Es/Ec$

$\rho = As / (\text{bar spacing} * ds)$

$k = \sqrt{[2*\rho*n + (\rho*n)^2]} - (\rho*n)$

$j = 1 - k/3$

$fss = Ma / (As * j * ds)$

We will now design the link slab for control of cracking using the AASHTO LRFD Bridge Design Specifications.

1. We will try to use #6 bars spaced at six inches for the trial design.
2. We will assume that the cover to the face of the bars is 3.0 inches. This depth is based on the fact that the link slab bars are located below the main deck reinforcement (parallel to the beams).
3. The next calculations are based on standard service limit state theory for reinforced concrete. From this, the stress in the bar is calculated for each side of the link slab.
4. A check is made to ensure that the stress in the bar does not exceed 0.6 f_y .
5. The last step is to calculate the maximum bar spacing based on all the previous calculations and input. The maximum bar spacing is equal to 6.31 inches for Pier 1 and 9.79 inches for Pier 2.
6. For consistency of detailing we will use 6 inches for both links slabs.

Link Slabs and Bearings

Bearing considerations with link slabs

- There needs to be at least one line of expansion bearings at the link slab support
  - To allow free rotation of the beam ends once the link slab is cast
- The thermal movement characteristics of the bridge typically change with link slabs
  - The bridge will behave similar to a continuous girder bridge

There are several other items that need to be considered when designing bridges with link slabs.

There needs to be at least one line of expansion bearings at the link slab support. This will allow free rotation of the beam ends once the link slab is cast. We will demonstrate the reason for this in the following slides.

The addition of link slabs on a multi-span bridge will affect the thermal movement characteristics of the structure. Links labs do not provide live load continuity but with regard to thermal movement, they will make the bridge behave as a continuous structure. This will also be demonstrated in the following slides.

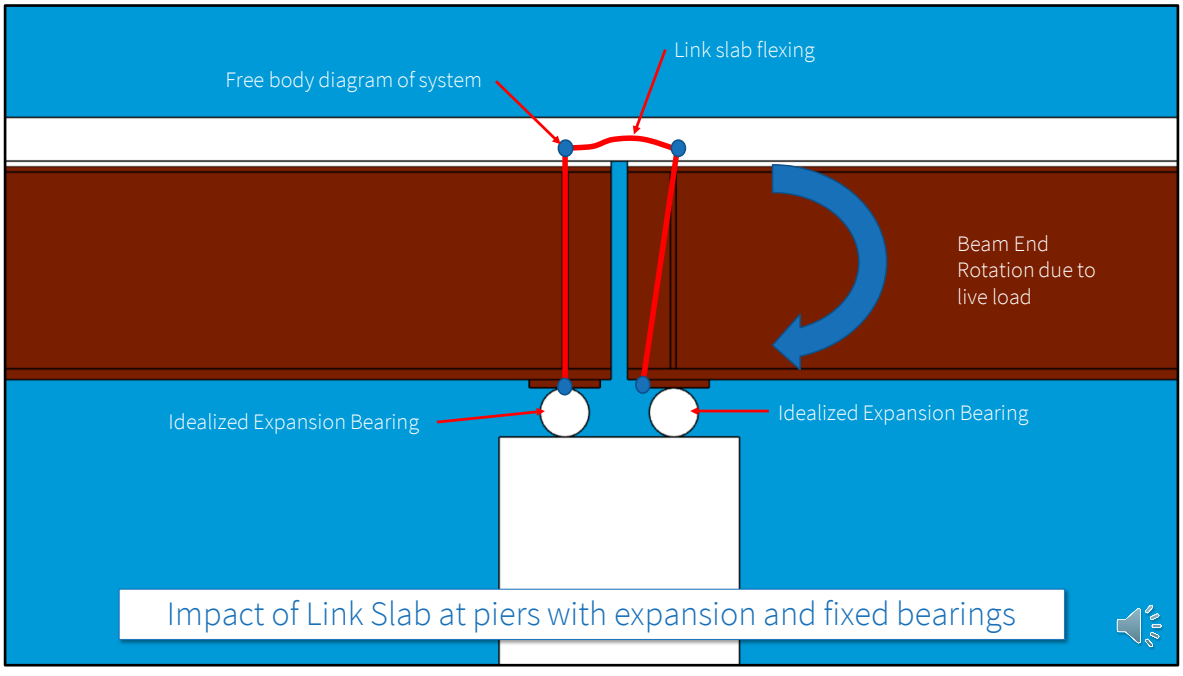

This graphic depicts a free body diagram of a link slab pier built with two expansion bearings.

With the addition of a link slab, the center of rotation shifts from the bearings to the mid-depth of the slab. This leads to minor lateral movement at the bearings when the beams are subjected to live load rotations. The two expansion bearings allow this lateral movement to occur.

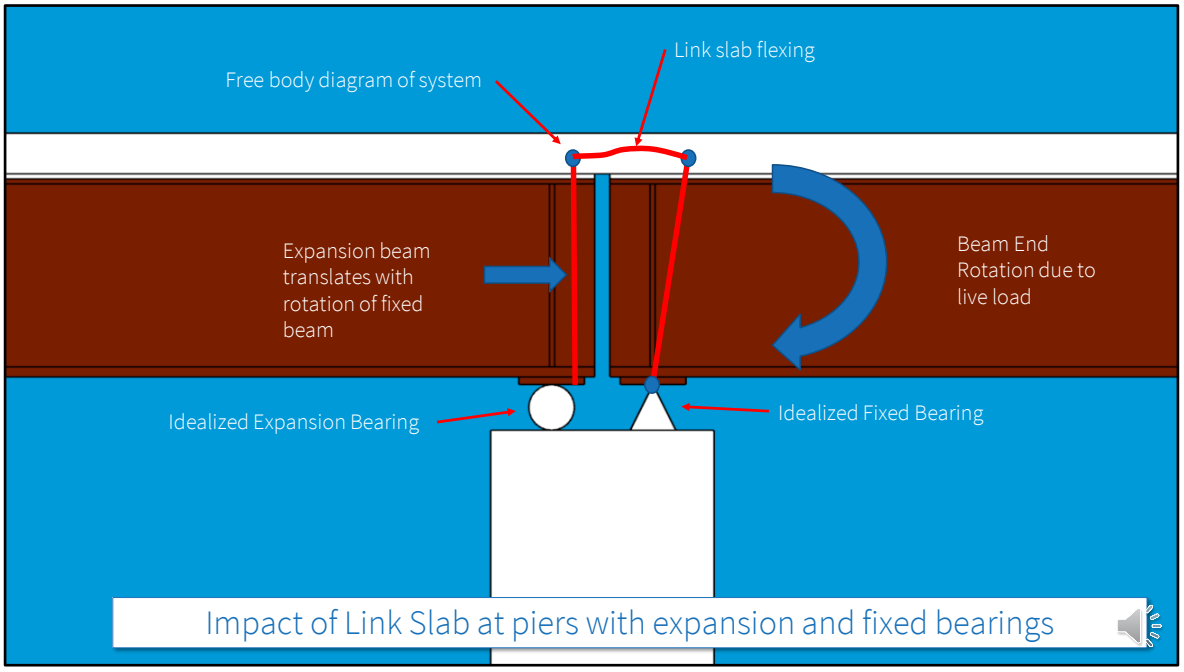

This diagram shows a pier with one fixed bearing and one expansion bearing under a link slab. The one expansion bearing still allows rotation of both beam ends.

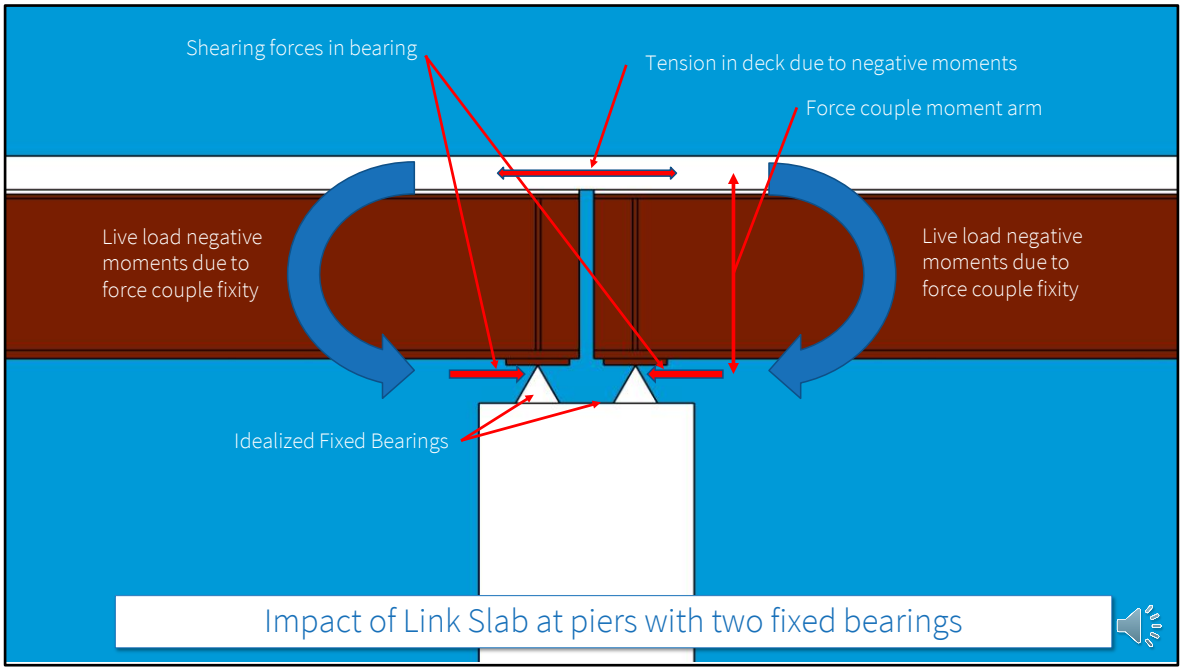

This detail shows the force couple that can develop at a link slab pier if two fixed bearings are detailed. This can lead to damaged anchor rods and excessive cracking in the deck.

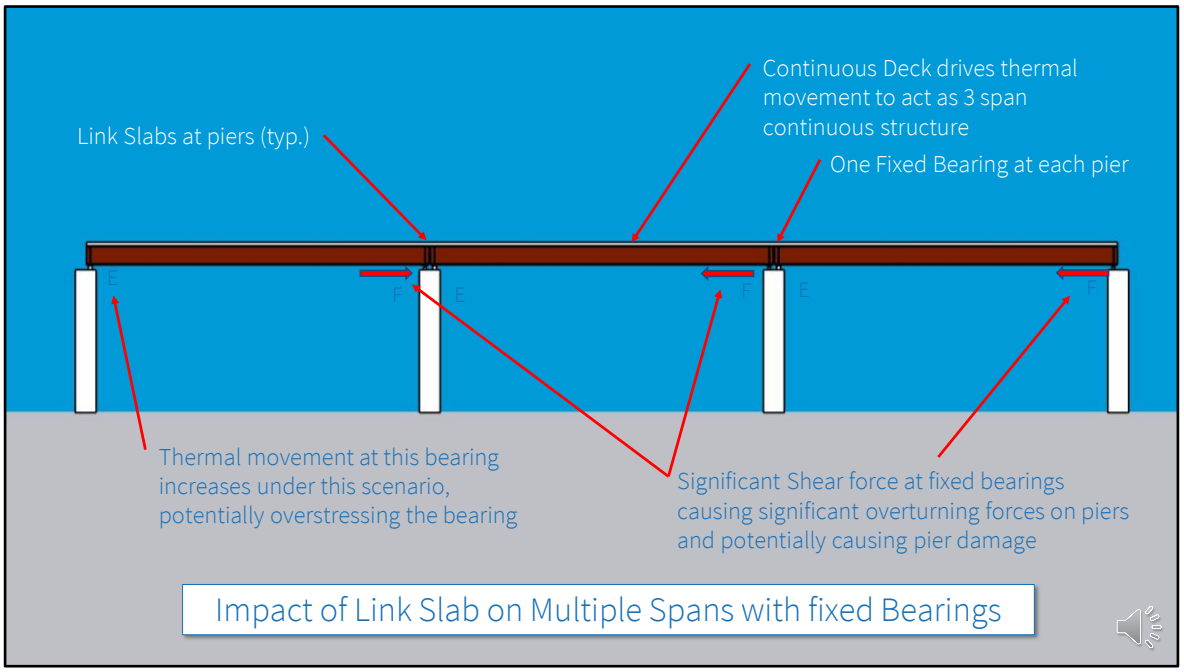

This diagram shows the impact of link slabs on a multi-span structure built with fixed and expansion bearings in a traditional manner, which includes one expansion bearing and one fixed bearing at each pier. The addition of the link slabs leads to thermal movement behavior that is similar to a continuous bridge. If fixed bearings are used at all piers, the thermal movement of the bridge will lead to forces acting on the piers. The designer should either detail the bearings similarly to a continuous bridge or design the piers for the thermal movements.

Economy of link slab bridges

- We were taught in school that least weight is least cost
- Is this so? Not necessarily
- September 2014 Article in Modern Steel Construction Magazine
- Compared a continuous bridge to a link slab bridge
  - Continuous bridge has less steel
  - Link slab bridge has no bolted splices and less deck reinforcing
  - Result: Essentially a wash

Piece BY Piece

BY MICHAEL P. CULMO, P.E.

Span-by-span bridge construction, using modular steel bridge elements, can serve as a viable and economical bridge-building alternative.

ACCELERATED BRIDGE CONSTRUCTION (ABC) has come a long way in the last 10 years.

And prefabricated, modular elements made with steel beams have been a big factor in making this happen, as they can be used to reduce the weight of the assemblies, thereby making crane installations more cost effective and viable.

Modular steel beam/deck elements generally consist of two or three steel beams with a composite concrete deck cast in the fabrication plant. They are erected quickly and joined with reinforced concrete closure pours made with high-early-strength concrete; a bridge superstructure can be built in as little as two days using this technique.

One of the more successful examples of this method was the 99Fast14 project in Medford, Mass. (a 2012 NSBA Prize Bridge Awards winner), which involved replacing 41 spans on 14 bridges along Interstate 93. The 14 bridge superstructures were replaced during ten 55-hour weekend work periods. The use of structural steel for the beam elements made the project possible since crane capacities controlled many of the sites.

Michael P. Culmo (culmo@cmeengineering.com) is vice president of transportation and structures with CME Associates, Inc., in East Hartford, Conn.

Span by Span

Let's take a look at the two common ABC methods to design and construct a multi-span bridge. The first is to detail multiple simple spans between supports, sometimes referred to as "span-by-span" construction. Conventional simple-span bridges require expansion joints at each pier—historically a problematic feature of many bridges—as leaking joints, considered by many to be the most common cause of premature bridge deterioration, lead to the corrosion of beam ends and deterioration of the substructures under the joints.

The second method for designing multi-span bridges is to use continuous-span beams, which do not require deck expansion joints at the interior supports, and require less structural steel for a given span arrangement.

Span-by-span beams are simply erected on the substructures without the need for splicing and shoring towers. The problem with leaking deck joints has been addressed by designing these bridges to be either joint-less or continuous for live load by using simple concrete pours at interior supports to eliminate the need for deck expansion joints. Using span-by-span techniques for the superstructure can accelerate the process by eliminating the need for welded or bolted field splices in continuous girders. Beam erection can progress very rapidly as the modular units are inherently stable. Once set, the crane can release the beam without the need for any external bracing.

One method that has been developed to eliminate deck joints on simple-span bridges is "link slab" technology. A link slab is built by simply casting the slab continuously across the pier linking the two spans. The link slab is designed to accommodate the live load rotation of the girders without significant cracking. This is accomplished by debonding a portion of the deck near the support to form the link slab, which acts as a flexible beam. The recommended

SEPTEMBER 2014

51

One might wonder about the economics of designing a bridge as simple spans. We were taught in school that the least weight of steel resulted in the least cost for the bridge. This may not be the case when total project costs are accounted for.

Michael Culmo, the PI for NCHRP Project 12-102 wrote an article for Modern steel construction magazine in 2014 on this subject. The article covered a study that investigated the cost of a two-span overpass structure. Two designs were completed. The first was a traditional 2-span continuous bridge. The second was a two-span bridge with simple spans and link slabs.

The results of the study found:

1. The continuous girder design did have less structural steel.
2. The link slab design eliminated costly bolted field splices.
3. The link slab bridge did have an additional line of bearings at the pier.
4. The link slab design had significantly less longitudinal reinforcing steel in the deck as it did not have a "negative moment region".
5. The anticipated costs for the erection of the simple spans would be lower without bolted splices.

The cost analysis showed that the reduced deck reinforcing steel, erection costs, and the elimination of the bolted splice offset the additional cost of the simple span girders and the additional bearings. The general conclusion was that the costs were approximately equal, therefore designers should not shy away from span-by-span designs based on cost.

- Bridge Railings and Barriers
  - Effect on Deck Panel Design
  - Barrier Options

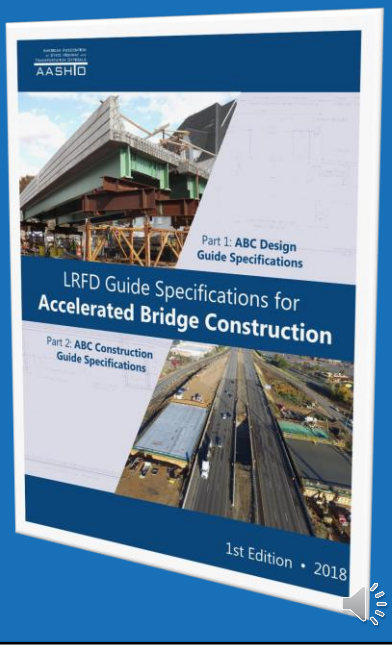

This next section covers bridge railings barriers.

Bridge barriers fall into two major categories, metal railings and concrete parapets.

We will explore the effects of bridge barriers on panel designs, and investigate current barrier options that are available in the US.

Prefabricated Barrier Options

Not a lot of precast barriers in the market that have been crash tested

- Connections can be problematic
- Geometry is an issue
- Joints and leakage may be a problem
- Iowa State University has static tested a single slope shape
- There may be more

Metal barriers

- A viable alternative.
- Connections may be easier
- In some cases, they can be pre-bolted and set in place as a unit

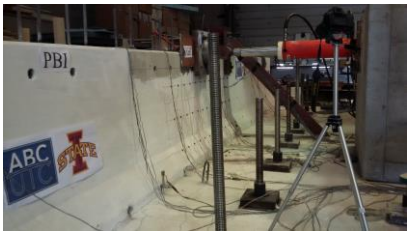

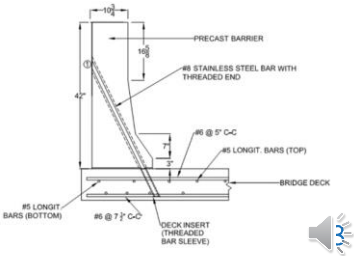

Prefabricated concrete barriers represent one aspect of the ABC community that is somewhat lacking. There are significant issues with prefabricated barriers that are hard to resolve.

The connection to the deck can be congested since significant amounts of reinforcement are required, and in many cases, there is an inability to have uniform bar spacing between the deck and the barrier. This complicates the connection of a precast barrier which typically has uniform connector spacing.

Providing adequate geometry is another complication of precast barriers. Barriers need to accommodate horizontal curves, vertical curves, and tolerances. All of these factors play against the concept of standardization and repetition, which is a significant benefit of prefabrication.

Durability of precast barriers is another issue. There is a need to provide watertight joints beneath the barrier, and between the barrier sections. This has proven to be a difficult problem to solve.

There are very few crash tested barriers in the market. Iowa State University has statically tested a barrier concept shown in the slide, but it has not yet been crash tested. There is a current research proposal in the works to test more barriers in the future.

Metal barriers or railings are a viable option. There are crash tested barriers in the market, that can be quickly bolted in place. There still are issues with providing uniform spacing for anchor rods, but they are not as severe as the precast alternatives. We have seen some contractors pre-bolt railing segments and install them as a unit, which facilitates construction.

Railing and Barrier Design

Barrier Design (AASHTO LRFD BDS):

- AASHTO LRFD Bridge Design Specifications
  - All barriers shall be crash tested (Art. 13.7.1.1)
  - Equations in Appendix A13 are intended for preliminary design of barriers and railings for crash testing

13.7—TRAFFIC RAILING

13.7.1—Railing System

13.7.1.1—General

The primary purpose of traffic railings shall be to contain and redirect vehicles using the structure. All new vehicle traffic barrier systems, traffic railings, and combination railings shall be shown to be structurally and geometrically crashworthy.

The AASHTO LRFD Bridge Design Specifications Include provisions for railings and barriers. Article 13.7.1.1 states that “All new vehicle traffic barrier systems, traffic railings, and combination railings, shall be shown to be structurally and geometrically crashworthy.”

Appendix A13 contains equations for the preliminary design of barriers prior to crash testing. These equations are useful tools for this purpose, however, they were not intended for the final design of barrier systems.

Section 3: Precast Barriers

3.5.1.9—Precast Concrete Railings

Precast concrete railing (also referred to as a barrier or parapet) shall be designed to emulate cast-in-place concrete according to the requirements of the *AASHTO LRFD Bridge Design Specifications*. The connection of the precast railing to the bridge deck is critical to the physical performance of the bridge.

C3.5.1.9

The *AASHTO LRFD Bridge Design Specifications* require that traffic barriers and railings be crashworthy. Precast Barriers would be included in this requirement. Appendix A13 of the *AASHTO LRFD Bridge Specifications* can be used for the preliminary design of the barrier or railing.

The design of the reinforcement within the barrier can be similar to cast-in-place concrete. The spacing of deck connections in precast barriers may be somewhat larger than typical cast-in-place barriers, therefore adjustments to the design internal reinforcements may be required.

The durability of the barrier or railing is an important part of the design. It is important to prevent gutter flow water from migrating under the barrier where it can deteriorate the anchor bolts and deck. Special detailing of joints at the base of the railing is required. Consideration should also be given to the use of corrosion resistant reinforcement.

Article 3.5.1.9 of the Guide Specifications for ABC indicates that precast concrete railings need to meet the requirements of the AASHTO LRFD Bridge Design Specifications, which specifies crash testing. The use of prefabricated barriers does not waive this requirement.

Deck Overhang Design

AASHTO LRFD BDS Appendix A13:

- Three design cases need to be checked:

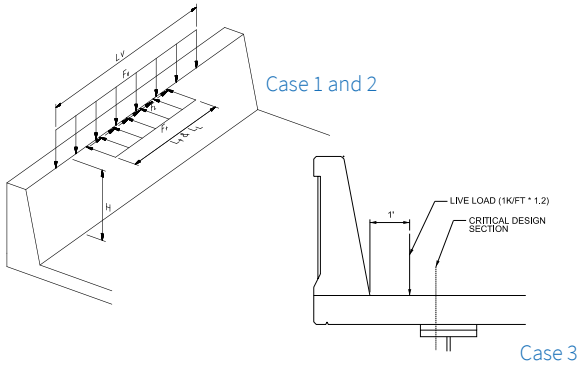

A13.4—DECK OVERHANG DESIGN

A13.4.1—Design Cases

Bridge deck overhangs shall be designed for the following design cases considered separately:

Design Case 1: the transverse and longitudinal forces specified in Article A13.2 Extreme Event Load Combination II limit state

Design Case 2: the vertical forces specified in Article A13.2—Extreme Event Load Combination II limit state

Design Case 3: the loads, specified in Article 3.6.1, that occupy the overhang—Load Combination Strength I limit state

The AASHTO LRFD Bridge Design Specifications includes design recommendations for deck overhangs. These are included in Appendix A13. Three design cases are specified.

Design Case 1 covers the lateral forces due to a vehicle impact on the barrier. The transverse and longitudinal forces from the impact need to be resisted. The vertical forces are omitted, since the vehicle vertical loads occur at a different time interval during the impact. Crash testing has shown that when a truck initially impacts a barrier, the forces are primarily transverse and longitudinal. As the truck slides down the barrier the transverse and longitudinal forces diminish as the truck rolls on top of the barrier creating the vertical forces.

Design Case 2 covers the second half of the impact event where the truck is leaning on top of the barrier. In this case transverse and longitudinal forces are omitted.

It is important to note that vertical wheel loads in the overhang region are neglected in the first two design cases. Crash testing has shown that when the maximum impact forces occur, the wheels of the truck are typically off the pavement.

Design Case 3 covers the non-impact loading in the overhang region . In this case a wheel line load of 1 kip per foot is applied 1 foot from the gutter line.

Experience has shown that Design Case 1 controls virtually all overhang designs, therefore we will focus on that load case.

Deck Overhang Design for Barriers

Design Case 1: Trans. & Long. Impact Loads

- Design for Mc plus T, where:
  - Mc = Cantilever moment resistance of the barrier
  - T = Transverse force based on yield line analysis capacity distributed over a specified length
- Theory:
  - The deck need to develop the resistance of the barrier
- This can be problematic because
  - The barrier is typically thick and heavily reinforced resulting in large values for Mc and T
  - The deck is relatively thin
  - Result: Significant amount of top steel in the deck overhang

A13.4.2—Decks Supporting Concrete Parapet Railings

For Design Case 1, the deck overhang may be designed to provide a flexural resistance, M_s, in kip-ft/ft which, acting coincident with the tensile force T in kip/ft, specified herein, exceeds M_c of the parapet at its base. The axial tensile force, T, may be taken as:

$$T = \frac{R_w}{L_c + 2H} \qquad \text{(A13.4.2-1)}$$

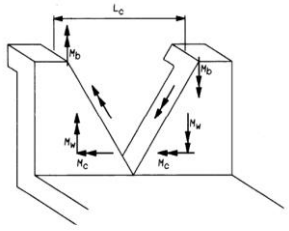

Figure CA13.3.1-1—Yield Line Analysis of Concrete Parapet Walls for Impact within Wall Segment

The process for designing the deck overhang for Case 1 is for the deck to resist the lateral and longitudinal impact forces.

The term Mc is the ultimate resistance of the barrier bending about the longitudinal axis at the base. The “c” term denotes “cantilever”.

The transfers force “T” is derived from the transverse resistance of the barrier distributed over a specified length. Yield line analysis is specified in the AASHTO LRFD Bridge Design Specifications for the preliminary design of barriers. This analysis is used to calculate the transverse resistance of the barrier “Rw”, and the critical length of the failure pattern, “Lc”. The distribution length for T equals the barrier resistance divided by Lc plus 2H. The 2H term Is based on the assumption that the impact load is distributed down the face of the barrier at a 45 degree angle.

The theory behind this approach is that the resistance of the deck has to exceed the resistance of the barrier. This can be problematic because barriers tend to be thick and heavily reinforced, which increases the values for Mc and T. The deck on the other hand, is relatively thin. Placing high moment demand on such a thin deck leads to significant amounts of top steel in the deck overhang.

The text in Article A13.4.2 includes a key word to consider. It states that the overhang “may” be designed to provide these forces. It is not a hard requirement. The basis for this approach is to limit damage after an impact to the barrier, not the overhang. Some owners choose to use a

more rational design process for overhangs by designing for the forces, not the capacity of the barrier. In the following example, we will stick with designing for the capacity of the barrier, since this is the approach used in the FHWA design example.

Design Section for Overhangs

Design sections

- Section A-A
  Check for Cases 1 and 2
- Section B-B
  Check for all three cases
- Section C-C
  Check for interior deck design

Based on experience..

- Section A-A controls every design
  Design for Mc + T
- This can be a problem with PS strand
  Development length of strand

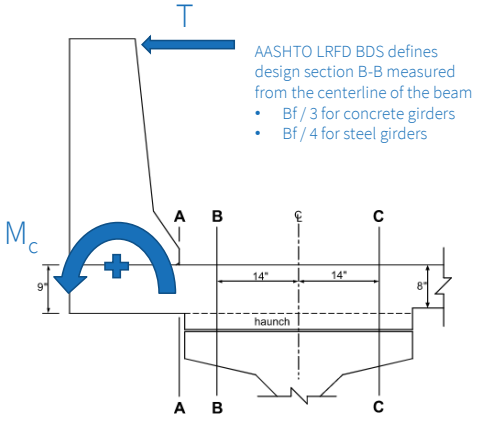

Figure 4-7 - Design Sections in the Overhang Region

The design sections for overhang design are shown in the Federal Highway design example.

The first design section labeled A-A is located at the gutter line.

The second design section labeled B-B is located near the edge of the fascia girder flange. The distance of design Section B-B from the centerline of the girder is defined in the AASHTO LRFD Bridge Design Specifications as:

- 1/3 of the flange width for concrete girders, and
- ¼ of the flange width for steel girders

Designers typically distribute the forces at the gutter line lengthwise down the slab using a 30 degree distribution angle. This is to account for three dimensional effects in the system.

Experience has shown that by using this approach, design Section A-A controls virtually every design. This presents a problem for the design of deck panels reinforced with prestressing. The development length of a prestressing strand is typically larger than the width of the barrier , therefore the strand is not fully developed at design Section A-A. Therefore, additional mild steel will most likely be required in the overhang region for a prestressed panel.

Example: Precast FDDP Design

Reference

- FHWA LRFD Design Examples
- Results

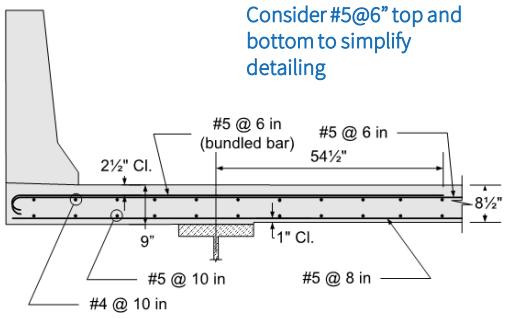

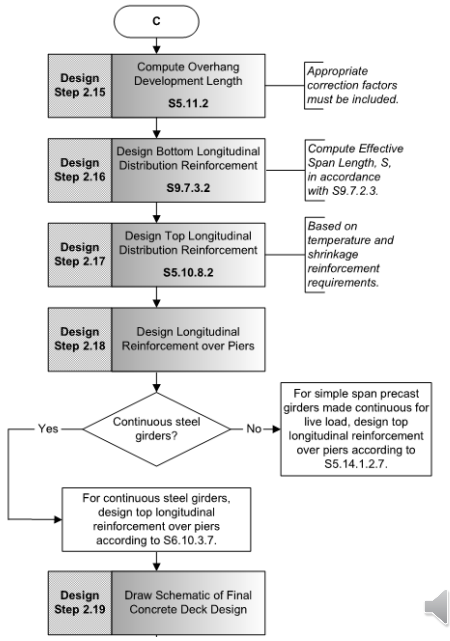

We will again look at the results of the deck design in the Federal Highway design example.

The required reinforcing in the deck is doubled #5@6" on the top and #5@8" on the bottom. This demonstrates the significant amount of reinforcing required in these overhangs. We previously noted that the designer needs to check the layout of these bars and their interaction with other features in the deck panel including pockets for shear connectors, post tensioning ducts (if used), and the required reinforcing for the concrete barrier or metal railing.

Effect on Deck Panel Design

What should the designer do?

- Accurately detail all the bars and pockets to make sure it can all fit

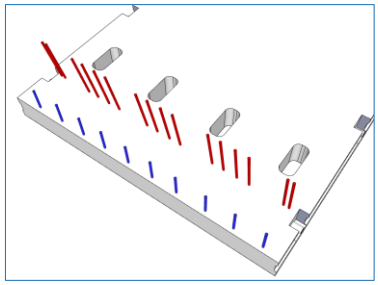

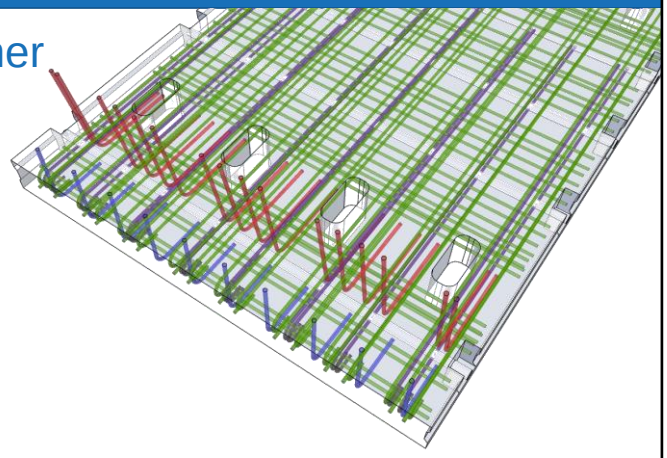

It is important for designers to accurately detail and layout all the features of the deck panel to ensure that all the reinforcing can fit in the panel.

The sketch to the right is an X-Ray isometric of a typical deck panel.

The green bars are the normal deck steel. the spacing of these bars needed to be adjusted to avoid the blockouts for the shear connectors, and the hand holes for the post-tensioning duct splices.

The red bars are the front face barrier reinforcement. The blue bars are the rear face barrier reinforcement.

Purple bars are shown, which represent the additional top steel to resist the overhang forces.

What can we take from this demonstration:

1. There is significant congestion of reinforcement in the overhang region
2. The shear connector block outs prohibit uniform bar spacing, which greatly complicates the detailing of a prefabricated barrier.
3. The designer needs to verify that the reinforcing can fit in the overhang along with all the other features.

This potentially explains why prefabricated barriers are not so common. On many ABC projects, designers choose to install temporary barriers in the shoulders of the roadway and cast

conventional barriers after the bridge is opened to traffic. Another option is to cast the barrier integral with the deck in the fabrication shop.

- Adjacent decked beams
  - Types of adjacent decked beams
  - Design requirements
  - Deck level connections
  - Simple for DL continuous for LL

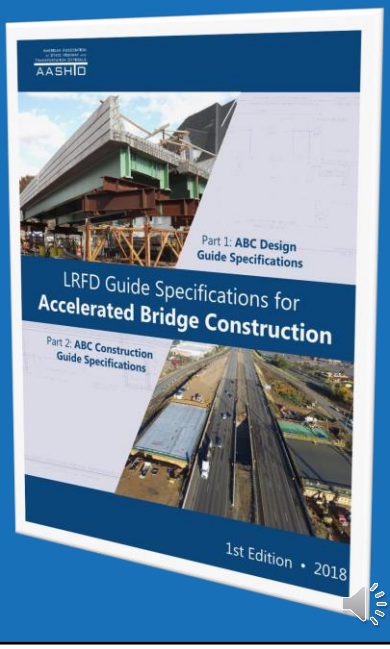

This next section covers adjacent decked beams.

These prefabricated elements can be a useful tool for ABC. The concept is to quickly erect the deck beams and connect them in the field to complete the superstructure.

We will cover the different types of adjacent deck beams that are in use, the design requirements for them, the deck level connections, and the concept of designing the beams as simple spans for dead load and continuous for live load.

Types of MDBs

Known as prefabricated beam units in some states

Steel option

- 2 or 3 beams with a precast deck

Precast concrete options

- Prestressed double tee
- Modular beams made with prestressed I-girders
- Deck bulb tees

The Guide Specifications for ABC define these elements as “Modular Decked Beams” or MDBs. MDBs can be detailed with steel or concrete beams.

The steel option typically consists of two or three beams fabricated with a precast concrete deck.

There are precast options for MDB‘s. These include prestressed Double T beams, modular decked beams made with prestressed I girders, and Deck Bulb Ts.

Modular Decked Beams

2 Beams with precast deck

- Eliminates deck to beam connections

Modular decked beams made with steel girders have become quite popular in the northeast US. The steel reduces the weight of the element, which allows for longer span lengths and smaller cranes.

By casting the deck on the beams, we eliminate the difficult connection of making a deck composite with the supporting beam, which can greatly facilitate construction. The deck closure joint between the modular decked beams is a relatively simple connection to make. By using “High Early Strength” concrete, it is feasible to replace a superstructure and as little as 48 hours.

The photo on the left shows the 93Fast14 project in Medford, MA. In this project, up to 7 spans of superstructure were replaced in a weekend. In total, 14 bridges with 41 spans were replaced in 10 weekends.

NEXT Beams

Precast Double Tee for bridges

Developed by the PCI NE Bridge Tech Committee

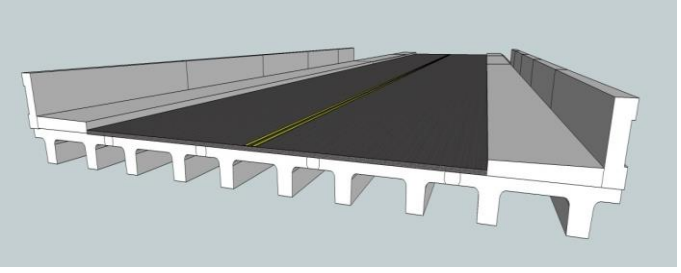

Details at: www.pcine.org

The PCI Northeast Bridge Technical Committee has developed a precast option for modular decked beams. The beam has been named the “Northeast Extreme Tee” or NEXT Beam. The extreme portion of the name denotes that it is a stronger version of a typical double T used in parking structures.

NEXT Beam Options

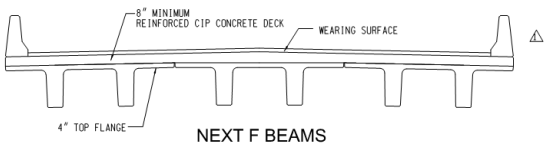

NEXT F BEAMS

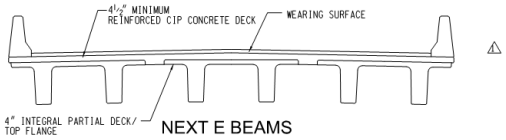

NEXT E BEAMS

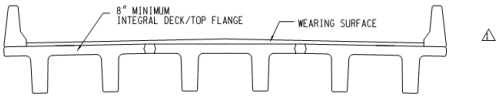

NEXT D BEAMS

NEXT F plus 8" CIP Deck

- No forming between flanges
- Easily accommodates vertical
- Curves w/CIP topping
- Easily handles camber variations

NEXT E plus 4" CIP Deck

- Uses less topping & reinforcement
- Flange connection made with CIP
- Easily accommodates vertical curve
- Easily accommodates camber variations

NEXT D no CIP Deck

- No CIP topping/deck
- Best section for ABC
- Special concrete for flange conn
- Harder to match adjacent members -skews

There are three versions of NEXT Beams.

The first is a NEXT F: With this beam, the top flange of the tee is a "form" for a cast in place reinforced concrete deck that is installed above the beam.

The second is a NEXT E: With this beam, the top flange is more heavily reinforced, acting similar to a partial depth precast deck panel. A relatively thin reinforced concrete topping is installed to complete the deck.

The third is a NEXT D: With this beam, the top flange is fully reinforced and acts as the deck of the bridge.

NEXT Beams

These photos show construction of a NEXT F beam bridge.

The photo on the right shows erection of the beams. You will notice that the design included a variable flange overhang to create a curved deck. the design also included semi integral back walls that were cast in the fabrication plant.

The photo to the left shows the completed structure.

Section 3: Adjacent Deck Beam Design

3.5.1.7 Adjacent Deck Beams

Adjacent deck beams consist of precast beam elements where the top of the beam forms the riding surface of the bridge. The beams are placed adjacent to each other to form the bridge superstructure. The adjacent deck beams shall be designed according to provisions of the *AASHTO LRFD Bridge Design Specifications*.

The connections between the adjacent deck beams can be designed as reinforced moment connections or as a shear connection. The type of connection will affect the live load distribution factor used in the design of the beam. Moment connections are recommended for bridges with a high volume of truck traffic.

The design of the top flange reinforcing in adjacent deck beams with projecting flanges can be based on emulation of a cast-in-place concrete deck as specified in the *AASHTO LRFD Bridge Design Specifications*. The provisions for maximum skew of primary reinforcement are applicable to modular deck beams. Primary reinforcement and distribution reinforcement are typically designed using the Strip Method. Designers shall also design the deck for serviceability and for deck overhang reinforcement.

C3.5.1.7

Adjacent deck beams have proven to be cost effective structures. They include precast box beams, voided slabs, solid slabs, double tees, deck bulb tees, and inverted tees.

The *AASHTO LRFD Bridge Design Specifications* contain provisions for live load distribution that are based on the type of connection between the deck beams. If an adequate moment connection is detailed between the deck beams, they can be assumed to be "sufficiently connected to act as a unit". Deck beams designed with a shear connection have proven to be durable for bridges with low volumes of truck traffic; however these bridges have not performed as well on high volume roadways. Therefore, a more robust moment connection is recommended for increased durability on high volume roadways.

The behavior of an integral deck on a flanged deck beam is akin to a cast-in-place deck on an independent beam.

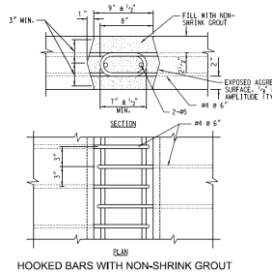

HOOKED BARS WITH NON-SHRINK GROUT

Article 3.5.1.7 of the Guide Specifications for ABC include provisions for the design of adjacent deck beams. The design of the beams is considered an emulative design, therefore the standard provisions in the AASHTO LRFD Bridge Design Specifications would apply.

The design of the connections between the adjacent deck beams can also be based on emulation. It is important to provide moment connections at these joints, since the live load distribution factors in the AASHTO LRFD Bridge Design Specifications are based on the assumption that the elements are "sufficiently connected to act as a unit".

The design of the reinforcing the top flanges of adjacent deck beams can be based on emulative design, therefore conventional deck design provisions would apply.

The detail on the right shows a typical deck level connection. These connections are similar to the connections that we discussed earlier today. They can be made with normal concrete, high-early strength concrete, or UHPC.

Section 3: Adjacent Deck Beam Design

Differential camber between beams

- Associated with camber tolerances
- Can be problematic with prestressed beams

Recommended Guidance

- PCI Northeast Documents
  - NEXT Beam Recommended Guide Details
  - Guidelines for Camber and Profile Management in Adjacent Beams
  - Available at www.pcine.org

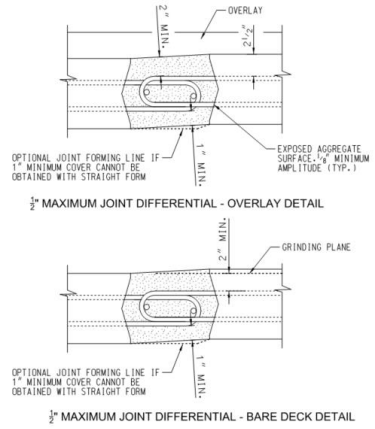

CAMBER DIFFERENTIAL DETAILS

Differential camber between adjacent deck beams can lead to problems during construction. The differentials are a result of tolerances in the fabrication of the adjacent deck beams. This can occur with both steel decked beams and prestressed concrete deck beams. Problems can be more pronounced with prestressed beams since differential camber growth can be exaggerated over time.

The PCI northeast bridge technical committee has developed guidelines for the management of cambers on adjacent deck beams. There are two guidance documents available at their website.

Different agencies use different methods to accommodate or adjust the beams in order to make the deck-level connections. Some agencies apply loads or jacking frames to bring the beams in better alignment. Others detail the connection to accommodate and anticipated tolerance. Other options include shimming and adjusting beam seats.

Section 3: Steel Beam Connections

3.6.10.3.2 Simple Span for Dead Load, Continuous for Live Load

This design and detailing method consists of span-by-span beams that are connected after casting of a composite concrete deck. The beams are supported on bearings at each end, and are designed as simple spans for most dead loads, and as continuous spans for live loads and any dead loads applied to the bridge after completing the connection.

The connection at interior supports consists of two components:

- Compression transfer at the bottom of the composite beam: This connection can consist of a bolted flange splice, a welded flange splice via a common sole plate, or end bearing between two end plates connected to the beam flanges.
- Tension transfer at the top of the composite beam: This connection can be made with a bolted flange splice, lapped mild reinforcement, supplemental steel connections, or post-tensioning (or a combination of these).

If bearings are used at the ends of each beam, a shear connection need not be included in the design of the continuity connection.

C3.6.10.3.2

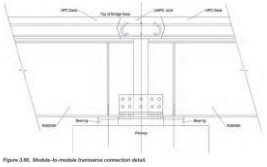

Figure 3.66. Module-to-module transverse connection detail.

Several connection methods have been tested in laboratories. The connections listed herein were shown to provide adequate resistance for ultimate loads. One test included a compression connection that consisted of a transfer of force from the compression flange to the surrounding concrete. This connection was found to be inadequate to resist ultimate loads (Azizinamini et al. 2005).

Source: SHRP2 ABC Toolkit

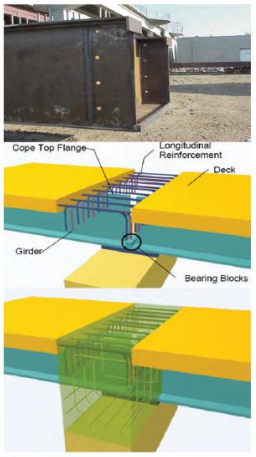

Source: A. Azizinamini.

Figure A.5. Pier continuity details.

Many years ago, the precast industry developed methodology's and details to make precast beams continuous at piers. This is referred to as span-by-span construction. The connection at the pier is typically a reinforced concrete integral diaphragm.

The same approach has been used for steel girders as well. To simplify the connection at the pier for both steel and concrete beams, the connection is made after the majority of the deck is cast. By using this approach, the connection need only be designed for live load and some composite dead loads.

This approach works well in ABC, where the deck may be cast in a fabrication facility. One of the downsides of this approach is the complexity of the connection at the pier when compared to link slabs. The benefits of achieving continuity for live load can reduce the size of the beams, however that savings may be lost in the complexity of this connection, and it also results in a slower construction process. For this reason, significant provisions for the design of this connection were not included in the Guide Specifications for ABC. References are given for use in the design of this connection.

End of Module 3

Available Modules

Non-seismic

1. General Provisions and Common Connections
2. Substructure Design
3. Superstructure Design
4. Bridge Systems
5. Durability of ABC Designs
6. ABC Construction Specifications

Seismic

7. Introduction to ABC Seismic
8. Seismic Connection Design and Detailing
9. Seismic Pocket and Socket Connections
10. Seismic Integral Connections