# Module 8: Seismic Connection Design and Detailing

This module covers:

- General Provisions
- Mechanical Reinforcing Bar Connectors for ED and CP Applications
- Grouted Duct Connections

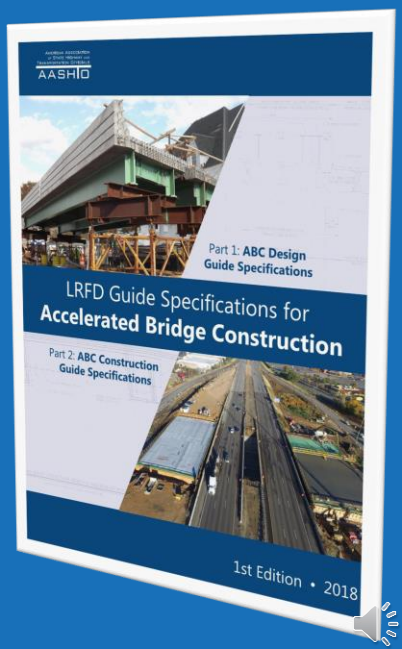


This module covers:

- General provisions of the seismic connections
- Mechanical Reinforced Bar Connectors for ED and CP Applications
- Grouted Duct Connections

# 3.6.1 General Provisions

**3.6.1—GENERAL PROVISIONS**

Provisions in Section 3.6 are not intended to preclude the use of other preferred details as approved by the Owner and so long the Designer can demonstrate adequate load transfer as well as consideration for compatibility of deformations and constitutive relations of materials.

The Designer shall design and detail all connections between prefabricated elements. The connections shall be structurally adequate and meet the durability requirements of the Owner.

The connections between elements shall be designed to resist all the forces that are transmitted from one element to the adjoining element.

Designers shall consider the constructability of all connections based on the anticipated construction methods.

**C3.6.1**

Specific connection provisions in Section 3.6 correspond to details for which adequate structural performance has been demonstrated through experimental and analytical research. While such details are recommended in the proposed guide specifications, they are not exclusive of other details or a combination thereof provided that the Designer can demonstrate, using fundamental principles of mechanics, the intended structural performance of the seismic system.

The importance of durability cannot be overstated. It is imperative that the connection of elements achieves durability that is equal to or better than the connected elements.

Connections in emulative design and detailing of precast concrete structures replace the typical construction joints in a bridge. The construction joints are either replaced with a mechanical connection or a cast-in-place closure joint.

Constructability should be checked for all connections to ensure that the elements can be placed and connected without conflicts.

Article 3.6.1 of the Guide Specifications for ABC include general provisions for ABC connections including seismic connections.

There are prefabricated or accelerated details that owners use that are not covered in the Guide Specifications for ABC, but guidance is provided to demonstrate there is adequate load transfer as well as consideration for compatibility of deformations and constitutive relations of materials.

The importance of durability cannot be overstated. It is imperative that the connection of elements achieves durability that is equal to or better than the connected elements.

# 3.6.1 General Provisions

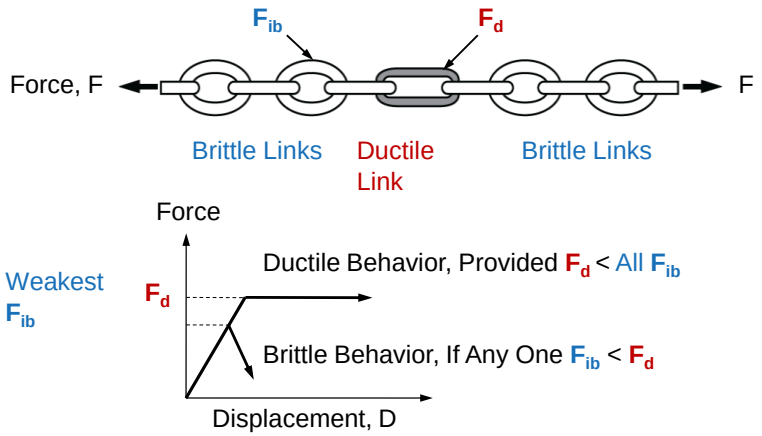


Similar to the bottle cap analogy, a chain analogy can be used to describe seismic connection design. A chain is only as strong as its weakest link. If we design a link to have ductile behavior and the remaining links to have capacity protection, then we can consistently qualify the behavior of the entire Earthquake Resisting System, Earthquake Resisting Elements, and Earthquake Resisting Sub-systems.

Looking at the force-displacement plot; if the force in the ductile link is less than the adjacent ones, we get ductile behavior, otherwise, we get brittle behavior where we may not want it. In ABC connections, without proper care, we can inadvertently create a collapse behavior if we do not follow this principle.

# 3.6.4 Mechanical Reinforcing Bar Connectors for ED and CP Applications

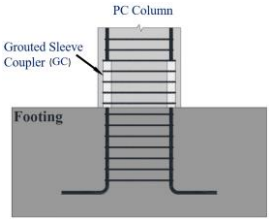


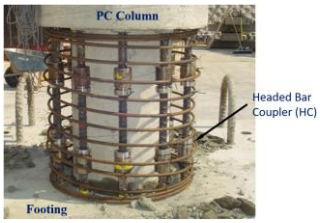


**3.6.4.1—General**

Mechanical reinforcing bar connectors are devices that allow direct axial load transfer between reinforcing bars.

Connections of columns to pier caps or footings in moderate and high seismic design require special detailing in design and construction to ensure emulative behavior of CIP reinforced concrete. Such connections are generally in or near ED regions of the substructure. The Designer shall identify the load path through the element to provide proper detailing for force transfer to adjacent elements, and shall identify the connection as ED or CP.

Two types of mechanical connectors, Types 1 and 2, may be used for bridge structures according to the limitations listed in Articles 3.6.4.2 and 3.6.4.3. The Designer shall specify which type of connector will be used in each connection. Type 1 may only be used for CP connections.

**C3.6.4.1**

Mechanical connectors in current use are mostly proprietary and include threaded sleeve, grouted sleeve, and sleeve-swaged. The most common connector in use is the grouted sleeve, since it is relatively easy to insert a projecting bar from one element into a sleeve cast into the connected element. Contract documents should include testing and approval procedures whenever a proprietary connector is used.

Although research has indicated that emulative design procedures are suitable for elastic analysis (Haber et al. 2013), these may not be appropriate for all splice types in the inelastic range of response. Placement of mechanical splices within the plastic hinge zone can alter the strain and plastic curvature distribution thus leading to reduced displacement ductility capacity. See Article 3.4.3.2.

Note: No more than one connector per bar in plastic hinge zone is allowed (3.6.4.4) so the Headed Bar Coupler detail does not meet the GS for ABC.

Article 3.6.4 of the Guide Specifications for ABC include provisions for mechanical reinforcing bar connectors for energy dissipation and capacity-protected applications.

The first connection considered is one with mechanical bar connectors. These are shown schematically in the top graphic and pictorially in the lower photo. The devices connect the tension reinforcing bars between elements (in this example, between the column and the footing). These connectors have been used in the bridge industry for many years, with several proprietary systems available. Mechanical connectors are a viable option for connecting concrete elements. Some agencies have accepted these devices, and some have not. Strength has been the primary criterion for the use of mechanical bar connectors, however, in seismic connection applications, achieving sufficient ductility is also a concern. The next series of slides will go over specific criteria for use of mechanical bar connectors per the Guide Specifications for ABC.

# 3.6.4 Mechanical Reinforcing Bar Connectors for ED and CP Applications

**3.6.4.2—Type 1 Mechanical Connectors**

Type 1 Mechanical Connectors are used to connect two in-line reinforcing bars. They shall be capable of developing 125 percent of the specified yield strength of the spliced bars.

Type 1 mechanical connectors can be used for most applications in which transfer of axial forces from one reinforcing bar into another reinforcing bar is required. The specification requirements for Type 1 mechanical connectors shall be according to the provisions for "Mechanical Connections" in the *AASHTO LRFD Bridge Design Specifications,* including the limitation on their use in columns.

Type 1 mechanical connectors shall not be used to splice longitudinal column reinforcement within a distance equal to twice the maximum column dimension from the top of the footing or from the bottom of the pier cap, or at any other location where yielding of the reinforcement is likely to occur as a result of inelastic lateral displacements.

**C3.6.4.2**

The *AASHTO LRFD Bridge Design Specifications* refer to this as a full "mechanical connection" and contain provisions for allowable slip within the connector as a function of bar size.

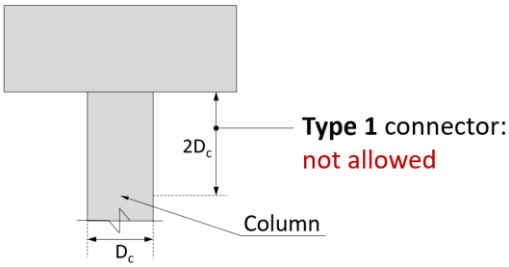


Type 1 connectors, which only develop 125% of the yield strength of the connecting reinforcing bars, are only to be used in regions where yielding will not occur. In other words, outside of the plastic hinge zone, which is defined in Article 3.6.4.2 of the Guide Specifications as two column diameters

Type 1 mechanical connectors shall not be used to splice longitudinal column reinforcement at any other location where yielding of the reinforcement is likely to occur as a result of inelastic lateral displacements.

# 3.6.4 Mechanical Reinforcing Bar Connectors for ED and CP Applications

**3.6.4.3—Type 2 Mechanical Connectors**

Type 2 Mechanical Connectors are used to connect two in-line reinforcing bars. They shall be capable of developing 100 percent of the specified minimum tensile strength of the spliced bars. Type 2 Mechanical Connectors shall be limited to bars with a specified yield strength of 60 ksi or less.

Type 2 mechanical connectors shall be permitted in the following locations and conditions:

- outside of the plastic hinge regions
- inside plastic hinge regions for Seismic Zone 1/ SDC A or inside of plastic hinge regions for Seismic Zone 2/SDC B with the Owner's approval
- inside plastic hinge regions for Seismic Zones 3 and 4 or SDCs C and D when the requirements of Article 3.6.4.4 are met.

Plastic hinge region shall be as defined in Article 4.11.7 of the *AASHTO Guide Specifications for LRFD Seismic Bridge Design.*

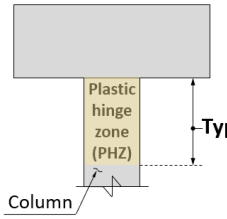


**Type 2**: Allowed

- For SDC A/Seismic Zone 1.
- Seismic SDC B/Zone 2 with Owner's approval.
- Seismic SDCs C&D/Zones 3&4 w/ add'l requirements (3.6.4.4).

… additional research is underway.

Type 2 mechanical connectors are permitted within the plastic hinge zone per the Guide Specifications for ABC. This is different than the AASHTO LRFD Bridge Design Specifications and the AASHTO Seismic Guide Specifications, which do not permit the use of mechanical bar connectors within the plastic hinge zone at all.

For low seismic risks, such as in SDC A or Seismic Zone 1, Type 2 connectors are permitted without restriction.

For SDC B, or Seismic Zone 2, they are allowed with Owner's approval.

Whereas for high seismic zones, such as SDCs C and D or Seismic Zone 3 & 4, the Guide Specifications for ABC allow their use, but with additional requirements. These additional requirements will be discussed in the upcoming slides.

# 3.6.4 Mechanical Reinforcing Bar Connectors for ED and CP Applications

**3.6.4.4—Type 2 Mechanical Connectors in Plastic Hinge (ED) Regions for SDCs C and D (Seismic Zones 3 and 4)**

Where Type 2 mechanical connectors are used in plastic hinge regions to connect a precast column to a footing or pier cap, the following requirements shall be satisfied.

Permissible connector devices shall be either grouted sleeve couplers (GC) or headed reinforcement couplers (HC) conforming to Article 3.6.4.3.

Where mechanical connectors are placed inside of columns, their length shall not exceed 15 times the column longitudinal reinforcement bar diameter.

No more than one connector per bar shall be allowed within the plastic hinge region. Staggering of splices in the plastic hinge region shall not be permitted.

Column connection shall satisfy the requirements of Article 3.6.4.4.1 for force-based design in Seismic Zones 3 and 4 or Article 3.6.4.4.2 for displacement-based design in SDCs C and D.

**C3.6.4.4**

Permissible mechanical connectors are limited to those for which tensile stress-deformation relations have been experimentally obtained in both the coupler region and the rebar region. Mechanical connectors with threads are not permitted because of their reduced ductility relative to sleeve couplers.

Laboratory test results (Haber et al. 2013, Pantelides et al. 2014) have shown that couplers reduce the rotational capacity of columns as a result of concentrated stiffness in the splice zone. The length of the connector inside a column should therefore be limited to control the reduction in displacement capacity relative to a similar CIP seismic system while still being able to develop the tension capacity of the spliced bars. Laboratory test results of column connections with mechanical connectors under simulated seismic loading have been limited to devices of lengths smaller than 15 bar diameters. There is no limitation in the length of the mechanical connectors when placed inside of the pier cap or footing, because the plastic hinge region forms in the column.

Staggering of mechanical connectors in the plastic hinge region could lead to non-coupled bars that lose contact with the transverse reinforcement (Figure C3.6.4.4-1) and become prone to premature buckling after cover spalling takes place. This issue was observed in a two-column bridge bent tested under cyclic loading by Phillipi and Hegemier (2013).

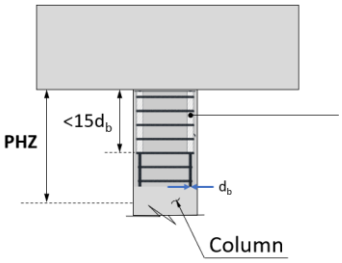


Only grouted sleeve coupler (**GC**) or headed reinforcement coupler (**HC**) allowed.

Article 3.6.4.4 of the Guide Specifications for ABC includes provisions for Type 2 Mechanical Connectors in Plastic Hinge Regions for SDC C and D or Seismic Zones 3 and 4. The first additional requirement for Type 2 connectors is that only grouted sleeve couplers (represented by the term GC) or headed reinforcement couplers (represented by the term HC) are allowed. There are other types of mechanical connectors commercially available, however, the lab tests under cyclic loading primarily used headed rebar coupler (HC) and grouted sleeve coupler (GC) splices in the plastic hinge zones.

It should be noted that the laboratory tests were restricted to mechanical connectors of lengths smaller than 15 times the column longitudinal bar diameter, therefore this additional requirement is included in the provisions.

Staggering of mechanical splices in plastic hinge zones is not permitted at any given location since the non-spliced longitudinal bars are not laterally supported by spirals due to the larger diameter of the adjacent couplers. Upon spalling of concrete cover under seismic induced load reversals, the unsupported bars are prone to buckling and subsequent premature fracturing.

# 3.6.4.4.1 Forced-based Design of Column Connections W/ Mechanical Connectors

Provisions in the *AASHTO LRFD Bridge Design Specifications* that use "*R*" shall be modified to use $R_r$.

$$R_r = \gamma R \qquad (3.6.4.4.1\text{-}1)$$

in which:

- $\gamma = 0.8$ for mechanical connectors with lengths equal to or smaller than 4 times the longitudinal column bar diameter
- $\gamma = 0.5$ for mechanical connectors with lengths larger than 4 times the longitudinal column bar diameter

where:

$R$ = coefficient defined in Article 3.10.7 of the *AASHTO LRFD Bridge Design Specifications*

$\gamma$ = $R$ reduction coefficient

Mechanical connectors shall be placed inside of the connecting pier cap or footing. In the event that couplers are be placed in the precast column instead, spliced reinforcement into the pier cap or footing shall be debonded per the provisions in Article 3.6.4.5. Debonding of reinforcement into the column shall not be permitted.

Article 3.6.4.4.1 of the Guide Specifications for ABC include provisions for Forced-based Design of Column Connections W/ Mechanical Connectors.

Research has shown that Type 2 mechanical connectors within the plastic hinge zone were found to exhibit reduced ductility and energy dissipation capacity as compared to CIP connections with the same reinforcement and no mechanical connector. This does not necessarily create a prohibition as the behavior can be sufficient for the demands on the connection.

Mechanical connectors can be quite rigid, allowing limited yielding within their length, therefore the entire elongation must take place in the bar adjacent to the end of the connector. When connectors are placed in the column, the elongation must occur within a short distance between the connector and the face of the adjacent element, which can lead to high local strains.

When used in a force-based design in seismic zones 3 and 4, the design is modified via reduced modification factors. The R factors used in force-based design are reduced by 20 to 50 percent depending on the length of the coupler. If this becomes an issue, it is feasible to place the coupler outside the hinge zone, within the footing or pier cap. In this case, the reduced R factors would not apply.

## 3.6.4.4.2 Displacement-based Design of Column Connections W/ Mechanical Connectors

Mechanical connectors shall be placed inside of the connecting pier cap or footing, or outside the column hinge region. In the event that couplers are placed in the precast column hinge region, the following provisions shall be followed. Designers shall obtain approval from the Owner for the use of mechanical connectors inside the column hinge region.

The displacement capacity of each bridge bent shall be calculated using the "Nonlinear Static Procedure (NSP)" outlined in the *AASHTO Guide Specifications for LRFD Seismic Bridge Design*. Plastic moment capacity shall be based on the moment-curvature analysis of the column section with no mechanical connector and the analytical plastic hinge length shall be taken as the reduced analytical plastic hinge length given by:

$$L_p^{sp} = L_p - \left(1 - \frac{H_{sp}}{L_p}\right)\beta L_{sp} \leq L_p \qquad (3.6.4.4.2\text{-}1)$$

$L_p^{sp}$ = reduced analytical plastic hinge length to account for the presence of the mechanical connector (in.)

$L_p$ = analytical plastic hinge length for CIP members as defined in the *AASHTO Guide Specifications for LRFD Seismic Bridge Design* (in.)

$H_{sp}$ = distance from the top surface of footing or bottom surface of pier cap to the nearest end of the mechanical connector (in.)

$L_{sp}$ = length of mechanical connector (in.)

$\beta$ = mechanical connector rigid length factor as defined in Table 3.6.4.4.2-1

Article 3.6.4.4.1 of the Guide Specifications for ABC includes provisions for Displacement-based Design of Column Connections W/ Mechanical Connectors.

This provision states that: *Plastic moment capacity shall be based on the moment-curvature analysis of the column section with no mechanical connector and the analytical plastic hinge length shall be taken as the reduced analytical plastic hinge length given by* equation 3.6.4.4.3-1. The following slide will demonstrate the variables in this equation.

Again, the reduced analytical plastic hinge length is due to the observed reduced displacement ductility capacity of the mechanical bar connection being smaller than the displacement ductility capacity of a like connection without the mechanical bar connectors

# 3.6.4.4.2 Displacement-based Design of Column Connections W/ Mechanical Connectors

**Table 3.6.4.4.2-1—Rigid Length Factor for Permitted Mechanical Connectors**

| Mechanical Connector Type | Rigid Length Factor, $\beta$ |
|---|---|
| Grouted Sleeve Coupler (GC) | 0.65 |
| Headed Reinforcement Coupler (HC) | 0.75 |

As outlined in the *AASHTO Guide Specifications for LRFD Seismic Bridge Design*, the design shall satisfy the corresponding "Structural Displacement Demand/Capacity for SDCs B, C, and D" as well as the "Member Ductility Requirements for SDC D" when applicable. Member ductility demand shall be determined using moment-curvature analysis of the column, neglecting the mechanical connector and using the reduced analytical plastic hinge length, $L_p^{sp}$, in place of the analytical plastic hinge length, $L_p$.

$$L_p^{sp} = L_p - \left(1 - \frac{H_{sp}}{L_p}\right)\beta L_{sp} \leq L_p \qquad (3.6.4.4.2\text{-}1)$$

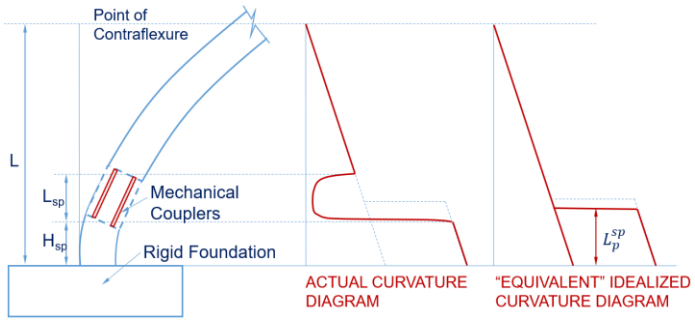


The equation for the reduced analytical plastic hinge length is a function of the standard analytical plastic hinge length, the position of the connectors from the adjoining members, the length of the mechanical connectors, and the type of connector.

The formulation is consistent with experimental research showing that the reduction is more significant for:

- Mechanical couplers placed in the column rather than the capacity protected pier cap or footing; and
- Longer mechanical connectors, such as some grouted couplers

The Rigid Length Table is shown, as well as a graphical representation of how the couplers affect the actual curvature diagram and the "equivalent" idealized curvature diagram.

# 3.6.4.4.2 Displacement-based Design of Column Connections W/ Mechanical Connectors

Where mechanical connectors larger than 4 times the column longitudinal reinforcement diameter are used within a distance of 0.5 times the column diameter from the interface with the footing or pier cap, shear demand for capacity protected elements shall be calculated based on the assumption that the overstrength moment capacity of the column is developed at the end of the connector away from the column to footing or pier cap interface.

To conservatively account for the shift of the plastic hinge region, the shear demand associated with hinging of the column should be based on the over-strength moment divided by the distance between the point of contraflexure and the end of the connector away from the column-footing or column-pier cap interface. This shear demand should be considered for the design of capacity protected members.

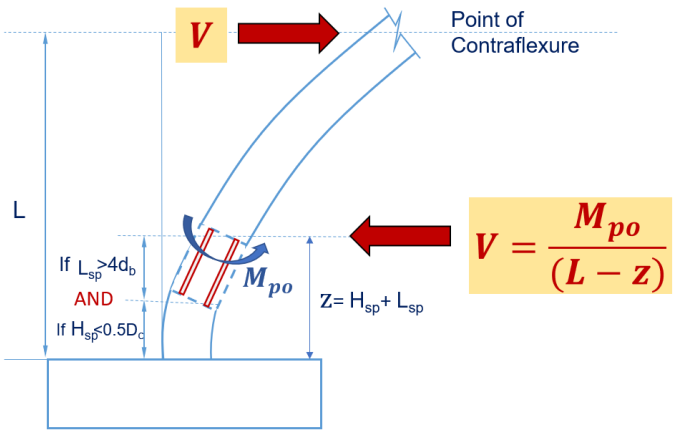


Research into mechanical bar connectors demonstrated slightly higher lateral load capacities as compared to control assemblies without mechanical couplers. The work showed that when the diameter of the mechanical connector is more than 4 times the column longitudinal reinforcement diameter and placed within a distance of 0.5 times the column diameter of the interface, then the following provision applies:

*To conservatively account for the shift of the plastic hinge region, the shear demand associated with hinging of the column should be based on the over-strength moment divided by the distance between the point of contraflexure (shown at the top) and the end of the connector away from the column-footing or column-pier cap interface. This shear demand should be considered for the design of capacity protected members.*

Note this provision is somewhat inconsistent with the equivalent plastic hinge approach (from the previous slide) where the maximum curvature demand occurs at the base of the column.

The equation on the slide can be used to calculate the shear resistance of the column with this arrangement.

## 3.6.4.5 Debonding of Column Longitudinal Reinforcement for Mechanical Couplers in the Plastic Hinge (ED) Region

Applicable in footing or pier cap when couplers are used. The minimum debonding length, $L_{deb}$, and anchorage length, $L_a$, in inches, shall satisfy:

$$L_{deb} \geq \max\begin{cases} 0.4D_c \\ 5{,}000\varepsilon_{ye}d_{bl} \end{cases} \qquad (3.6.4.5\text{-}1)$$

where:

$D_c$ = diameter of the column (in.)
$\varepsilon_{ye}$ = nominal yield strain of the column longitudinal reinforcement
$d_{bl}$ = diameter of column longitudinal bar (in.)

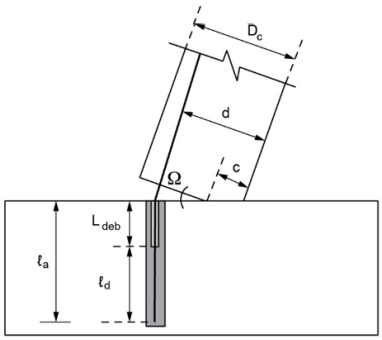


*Fig. C3.6.4.5-1 – Approach to Determine the Debonded Length in Column-to-Footing Connection*

Article 3.6.4.5 of the Guide Specifications for ABC covers Debonding of Column Longitudinal Reinforcement for Mechanical Couplers in the Plastic Hinge (ED) Region.

Debonding of precast column longitudinal reinforcement into pier caps or footings is permitted, however, not required. In the specification, it is noted as a measure of good detailing practice to reduce damage on the surface of the pier cap or footing and to reduce rebar strain concentrations.

Deliberately debonding the bar has been shown to delay rebar fracture and reduce spalling of adjacent capacity-protected elements (thus enhancing ductility capacity).

Shown here in the yellow box, is the minimum debonding length per the Guide Specifications for ABC.

## 3.6.4.5 Debonding of Column Longitudinal Reinforcement for Mechanical Couplers in the Plastic Hinge (ED) Region

Applicable in footing or pier cap when couplers are used. The minimum debonding length, $L_{deb}$, and anchorage length, $L_a$, in inches, shall satisfy:

$$l_a \geq L_{deb} + l_d \qquad (3.6.4.5\text{-}2)$$

where:

$l_d$ = the tension development length of reinforcing steel as determined with the *AASHTO LRFD Bridge Design Specifications* except for SDCs C and D

$l_d$ = the anchorage length of longitudinal reinforcing bars, $l_{ac}$, per *AASHTO Guide Specifications for LRFD Seismic Bridge Design.*

For joint design, the length of the column reinforcement embedded into the footing or pier cap shall be taken as $l_a - L_{deb}$.

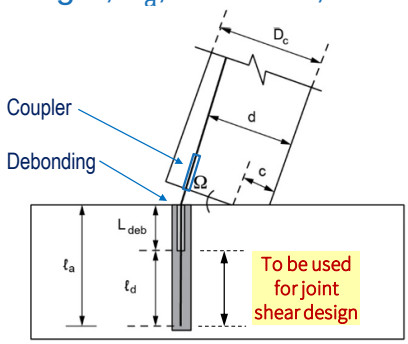


*Fig. C3.6.4.5-1 – Approach to Determine the Debonded Length in Column-to-Footing Connection*

This debonding option is applicable in footings or pier caps when couplers are used in the column. Note that the graphic in the Guide Specification does not show the couplers. It is shown in blue in this slide. The minimum debonding length ($L_{deb}$) shall be taken into account and the anchorage length ($l_a$) in inches, shall satisfy equation 3.6.4.5-2.

As indicated here, the value of $l_d$ varies depending on whether the force-based (per AASHTO LRFD BDS) or displacement-based (per AASHTO SGS) approach is used.

And as noted in the lower yellow box added to Fig. C3.6.4.5-1, longer embedment lengths may be needed to satisfy joint shear design requirements for SDCs C and D as described in AASHTO Seismic Guide Specification. The provision of neglecting the debonded length as part of the embedment length for joint design would be conservative.

# 3.6.5 Grouted Duct Connections

Grouted duct connections are used to connect individual reinforcing bars in tension by grouting the reinforcing bar that projects from one member into a corrugated steel duct embedded in a receiving member. Tensile force transfer occurs from the bar into the grout, from the grout into the duct, and then from the duct into the surrounding concrete and finally into adjacent reinforcement..

The connection between a precast column segment and the pier cap or footing is typically considered an ED connection. Connections using grouted ducts to join adjacent segments of a column are considered CP connections if the connection is outside the detailing limits of the plastic hinge zone.

Source: Brenes (2006)

Article 3.6.4.5 of the Guide Specifications for ABC covers Grouted Duct Connections. A grouted duct connection anchors a single bar into a body of concrete using post-tensioning ducts and grout. The force transfer is accomplished via bond stresses and the confined grout.

Results from pullout tests have demonstrated that corrugated steel ducts serve to stop splitting cracks and increase local confinement and shear transfer from the bar to the surrounding concrete. This effectively translates into higher concrete-steel bond strength and a reduction in the anchorage length required to develop the tensile strength of the reinforcement inside the ducts.

# 3.6.5 Grouted Duct Connections

**3.6.5.1—Minimum Development Length of Reinforcing Steel in Grouted-Duct Connections**

Column longitudinal reinforcement shall be extended into footings and pier caps as close as possible to the opposite face of the footing or pier cap to produce effective force transfer in the joint region. When grouted ducts are used, force transfer through the entire joint region must be accommodated. Accordingly, a combination of force transfer between conventional reinforcing bars and the duct may be necessary.

The minimum anchorage length for column grade 60 bars developed into corrugated steel ducts shall satisfy:

$$l_d \geq \frac{0.67 d_{bl} f_{ye}}{\sqrt{f'_g}} \qquad (3.6.5.1\text{-}1)$$

where:

$l_d$ = anchored length of longitudinal reinforcing bars into a pier cap or footing (in.)
$d_{bl}$ = diameter of column longitudinal bar (in.)
$f_{ye}$ = expected yield stress of the longitudinal reinforcement (ksi)
$f'_g$ = nominal compressive strength of grout (ksi)

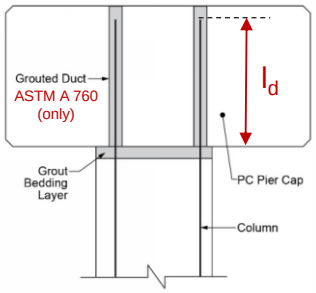


**Figure C3.6.5-1—Column-Pier Cap Grouted Duct Connection**

In lieu of specific data, it shall be permitted to use $f_{ye} = 68\ ksi$ for grade 60 reinforcement conforming to ASTM A706 or ASTM A615.

$f'_g$ in Eq. 3.6.5.1-1 shall not be taken greater than 8.0 ksi. Structural grout; not non-shrink grout

The Guide Specifications for ABC specify that the duct needs to be a helical lock-seam corrugated steel pipe conforming to ASTM A760 (as shown in the text added to Fig. C3.6.5-1). This is consistent with the research that which this provision is based.

As previously discussed, increased local confinement and shear transfer from the bar to surrounding concrete results in higher concrete-steel bond strength and a reduction in the anchorage length required to develop the tensile strength of the reinforcement inside the ducts. The anchorage length is defined in equation 3.6.5.1-1. The application of this equation creates a benefit of a reduced development length inside the duct.

As indicated in the underlined text, the grout within the ducts shall not be taken greater than 8-ksi. The use of structural grout should be specified, not standard non-shrink grout!

# 3.6.5 Grouted Duct Connections

**3.6.5.1—Minimum Development Length of Reinforcing Steel in Grouted-Duct Connections** continued

For SDCs A and B or for Seismic Zones 1 and 2, $l_d$ shall also satisfy the tension development length of reinforcing steel as determined with the *AASHTO LRFD Bridge Design Specifications.*

The ducts shall consist of a helical lock-seam corrugated steel pipe conforming to ASTM A760. Ducts made of plastic or other materials shall not be permitted. Axial force shall not be transferred beyond the end of the bar anchored within the duct without testing to demonstrate that the duct has the capacity to withstand the expected tensile force. The ratio of duct-to-bar diameter shall not be less than 3 and shall not exceed 6.

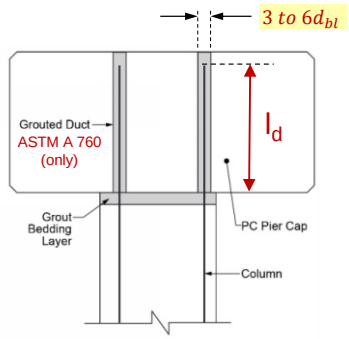


**Figure C3.6.5-1—Column-Pier Cap Grouted Duct Connection**

Tensile forces at the connection are transferred to the duct and surrounding concrete through bond. The duct diameter shall be between 3 and 6 bar diameters (as shown by the upper right yellow box).

# 3.6.5 Grouted Duct Connections

## 3.6.5.2 Splicing w/ Ductility Demands (ED) for SDCs C and D in Grouted Duct Connections

Where tensile force is transferred between reinforcing anchored into steel ducts using high-strength grout and bars adjacent to the duct, the splice length, $l_{splice}$, shall be the longer of the anchorage length of the bar inside the duct, as given by Article 3.6.5.1, or the splice length of the bars on the outside of the duct as determined from the article "Splices of Bar Reinforcement" in the *AASHTO LRFD Bridge Design Specifications*.

To the extent practical, the bars spliced to the duct shall be arranged to minimize eccentricity and shall be in contact with the duct. If bars are placed away from the duct, the non-contact distance shall be added to the splice length.

Transverse steel shall enclose both the duct and the bars outside the duct.

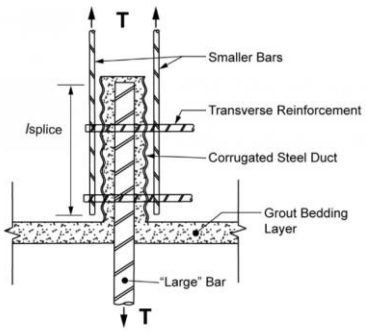


**Figure C3.6.5.2-1—Splicing of Grouted Duct Bars to Other Bars**

The reduced embedment length is a positive application for ABC; however, to ensure load transfer, the development of the force from the corrugated duct to the adjacent reinforcement requires adequate development and confinement as shown in the example.

The duct length shall be adequate to develop the adjacent reinforcement.

# 3.6.5 Grouted Duct Connections - Example

## Reinforcement Layout and Grouted Duct Geometry

**Interior Duct Rebar - (40) #11:**

- $d_{bl} = d_b = 1.41$ in — longitudinal bar diameter
- $A_{bl} = 1.56$ in$^2$ — longitudinal bar area

**Exterior Duct Rebar - (80) #8:**

- $d_{bl} = d_b = 1.00$" — longitudinal bar diameter
- $A_{bl} = 0.785$ in$^2$ — longitudinal bar area

**2 ~ #8 bars for each #11 bar…**

**No gap to corrugated duct.**

## Material Properties

**Grout/Concrete Properties:**

- $f'_g = 4$ ksi , $f'_c = 4$ ksi — nominal compressive strength

**Rebar Steel Properties (ASTM A615 Gr 60):**

- $f_{ye} = 68$ ksi — expected yield strength
- $f_{yh} = f_{tr} = 60$ ksi — transverse steel yield strength

**Corrugated Steel Pipe Properties (ASTM 760):**

- $f_{ypipe} = 33$ ksi

Let's go over a grouted duct connection example.

Reinforcement layout and Grouted Duct Geometry are shown, using (40) #11 bars inside the duct with (80) #8 exterior bars around the outside of the corrugation. There is no gap between the lapped bars and the corrugated duct. Any confining reinforcement would wrap these #8 bars also.

Material properties include concrete, grout, A615 Gr 60 reinforcement, and ASTM 760 corrugated steel pipe.

# 3.6.5 Grouted Duct Connections - Example

## Rebar Inside Duct

**Per AASHTO ABC Guide Specifications:**

$$l_d \geq \frac{0.67 d_{bl} f_{ye}}{\sqrt{f'_g}} = \boxed{32.12\ in} \quad (3.6.5.1-1)$$

**Per AASHTO LRFD BDS:**

$$l_{db} = 2.4 d_b \frac{f_y}{\sqrt{f'_c}} = 101.5 \text{ in} \quad (5.10.8.2.1a-2)$$

$$l_d = l_{ab}\left(\frac{\lambda_{rl} \times \lambda_{cf} \times \lambda_{rc} \times \lambda_{cr}}{\lambda}\right) = \boxed{40.61\ in} \quad (5.10.8.2.1a-1)$$

**Per AASHTO Seismic Guide Specifications:**

$$l_{ac} \geq \frac{0.79 d_{bl} f_{ye}}{\sqrt{f'_g}} = \boxed{37.87\ in} \quad (8.8.4-1)$$

## Rebar Outside Duct

**Per AASHTO LRFD BDS:**

$$l_{db} = 2.4 d_b \frac{f_y}{\sqrt{f'_c}} = 72.0 \text{ in} \quad (5.10.8.2.1a-2)$$

$$l_d = l_{ab}\left(\frac{\lambda_{rl} \times \lambda_{cf} \times \lambda_{rc} \times \lambda_{cr}}{\lambda}\right) = \boxed{28.800\ in} \quad (5.10.8.2.1a-1)$$

**Per AASHTO Seismic Guide Specifications:**

$$l_{ac} \geq \frac{0.79 d_{bl} f_{ye}}{\sqrt{f'_g}} = \boxed{26.86\ in} \quad (8.8.4-1)$$

$\lambda_{rl} := 1.0$ reinforcement location factor

$\lambda_{cf} := 1.0$ coating factor

$\lambda_{rc} := 0.4$ excess reinforcement factor (assumed value)

$\lambda_{er} := 1.0$ reinforcement confinement factor

$\lambda := 1.0$ concrete density modification factor, per AASHTO LRFD BDS Article 5.4.2.8

This slide shows a comparison of the various development lengths (rounded up to the nearest inch) that are specified in various AASHTO Specifications.

- Guide Specifications for ABC for grouted duct connection: 33 inches
- AASHTO LRFD Bridge Design Specifications = 41 inches  Note that this specification has an adjustment factor of 0.4 for excess reinforcement.  The full-strength development length would be the 102” notes in equation 5.10.8.2.1a-2.
- AASHTO Seismic Guide Specifications = 38 inches

You can see that the grouted duct connection greatly reduces the development length of the #11 bars.

The development of the #8 bars adjacent to the duct would need to meet the specification being used for the seismic design. The equations to the right show the results from the two common specifications used (rounded up to the nearest inch):

- AASHTO LRFD Bridge Design Specifications = 29 inches  Again, this is reduced by 0.4 for this case. The full-strength development length is 72”
- AASHTO Seismic Guide Specification = 27 inches

Therefore, by using the duct connection, we can splice a #11 bar with two #8 bars.  We can develop the force transfer mechanism with a minimum duct length equal to a maximum of the duct bar development length or the spliced bar development length. In this case, a distance of 32”.

Note: If there is an offset to the #8 bars, the offset should be added to the development length.

## 3.6.5 Grouted Duct Connections – Other Sections

3.6.5.3 Debonding of Column Longitudinal Reinforcement in Grouted Duct Connections

3.6.5.4 Bedding Layer in Grouted Duct Connections

3.6.5.5 Development of Deformed Steel Bars in Corrugated Steel Ducts using UHPC

There are several other minor provisions for seismic connection designs that are covered in the Guide Specifications for ABC:

- Article 3.6.5.3 covers the Debonding of Column Longitudinal Reinforcement in Grouted Duct Connections
- Article 3.6.5.4 covers the Bedding Layer in Grouted Duct Connections
- Article 3.6.5.5 covers the Development of Deformed Steel Bars in Corrugated Steel Ducts using UHPC

These are straightforward provisions that are self-explanatory.

# End of Module 8

## Available Modules

### Non-seismic

1. General Provisions and Common Connections
2. Substructure Design
3. Superstructure Design
4. Bridge Systems
5. Durability of ABC Designs
6. ABC Construction Specifications

### Seismic

7. Introduction to ABC Seismic
8. Seismic Connection Design and Detailing
9. Seismic Pocket and Socket Connections
10. Seismic Integral Connections