REPORT OF COMMITTEE ON HIGHWAY DESIGN

A T GOLDBECK, *Chairman*
Director, Bureau of Engineering, National Crushed Stone Association

A SYMPOSIUM ON THE ECONOMICS OF LOW COST HIGHWAY BRIDGES

CONCRETE, by E M FLEMING
TIMBER, by J F SEILER
STEEL, by F H FRANKLAND
REVIEWS by C B MCCULLOUGH
H H HOUK
G G WICKLINE

USE OF CONCRETE AS AN ECONOMIC HIGHWAY BRIDGE MATERIAL

E M FLEMING, *Manager*
Highways and Municipal Bureau Portland Cement Association

SYNOPSIS

The most economical structure for a given site should be determined through survey and location of the site in conjunction with cost data on properly designed structures The most economical bridge is the least costly one considering first cost, maintenance, renewal, insurance, and cost to traffic, etc Average figures on economic life of various types and cost analysis of a typical structure are given Methods of reducing first cost by use of simpler types of concrete structures, higher strength concrete, rigid frame structures, and continuous slab viaducts are analyzed

ECONOMICS AND FIELD OF USE

The objective of this paper is to present basic facts on the economics of the use of concrete as a bridge material and to give information which will enable an engineer to decide whether a certain location deserves a high type long life bridge of concrete or whether a temporary structure of low first cost may prove more economical.

The modern highway department is constructing highways of which the location, alignment, and grade are a result of a thorough study of all the pertinent factors, including present and probable future traffic Consequently the probability on present construction of obsolescence due to abandonment of the highway structure or any permanently constructed unit thereof has been reduced to a minimum

On state or other major systems where new alignment is provided, there can be no question as to the economy of high type bridging

Many highways in the smaller political subdivisions are purely of local character and extensive realignment is not apt to occur. Properly located bridging may be expected to be permanently so located, often a slight modification in the alignment of the highway adjacent to an existing bridge will aid the utilization of the structure Maintenance is generally neglected in these cases, which greatly reduces the economic life of any structure, especially the lower types Under these conditions a properly designed permanent high type structure will generally prove to be the most economical

On any highway system certain conditions may exist under which a more or less temporary structure may possibly be advantageous. These temporary structures should be of a type having the lowest possible first cost, with the idea clearly in mind, that a permanent, more economical type of structure is to be constructed as soon as circumstances permit

Assuming that a thorough study of the route on which the proposed bridge is to be located has been made, the first problem for the engineer is to determine the bridge location and general characteristics of the structure, based on the topographical and hydraulic features of the bridge site Armed with these data, together with data on properly designed structures including first costs, maintenance costs, other incidental costs and their average economic life, the most economical structure for the given site may be determined Through a lack of appreciation of the necessity for the above procedure, it is believed that large amounts of public funds have been wasted in the past and that to some extent at least it is being done now

By the most economical bridge is meant, that bridge on which the *ultimate cost* to the public is the least when first cost, maintenance, renewal, insurance, cost to traffic and all other charges incidental to the structure are considered

The total annual cost for any structure has been summarized in a formula in "Economics of Highway Bridge Types," by C B McCullough, as follows:

Total annual cost $= rC + M + R + I + O - pC$

Wherein $C =$ First cost of the structure in dollars

$r =$ Annual interest rate.

$M =$ Average annual maintenance cost in dollars.

$R =$ Renewal charge, i e, the amount of money in dollars which must be deposited at the end of each year to accumulate with compound interest at r per cent per annum for the structure's economic life, an amount equal to C dollars.

I = Annual insurance charge, only applicable to timber construction

O = Operation costs, for the purpose of this paper, these will be restricted to the average cost to traffic to drive over the structure

p = Per cent of the first cost representing an amount, which is a gain to the community or state, relative to development of scenic resources, advertising to the community or state, enhancement of abutting property values or other attendant gains

If any portion of the structure has a definite salvage value (S dollars), then the factor R should be multiplied by $\frac{(C-S)}{C}$

Average figures on economic life, unit renewal and maintenance costs are given as follows:

Type of Construction	Economic Life	$\frac{R+M}{C}\times 100$
Timber trestles (most unfavorable conditions)	10-12 yrs	12 2%
Timber trestles (most favorable conditions)	18-20 yrs	8 0%
Creosoted timber trestle	22-28 yrs	5 2%
Unhoused trusses (most unfavorable conditions)	12-15 yrs	9 0%
Unhoused trusses (most favorable conditions)	15-17 yrs	7.3%
Housed truss spans	23-35 yrs	6 2%
Steel spans	35-65 yrs	3 2%
Concrete construction	40-80 yrs	2 1%

Evidently maintenance and renewal costs vary widely for the various types Timber is subject to decay and gradual weakening under load Steel must be frequently repainted, with a general maintenance which is affected by conditions of climate. Concrete structures have less maintenance costs than any other type They are mostly due to hand rail breakage, rusting of misplaced steel, expansion joint trouble or other minor damage, and are being greatly reduced by present designs and knowledge of portland cement concrete

Timber bridges, because of fire hazard, are subject to fire insurance rates varying from 0 5 to 0 75 per cent of the first cost The seriousness of the fire-hazard is shown by the experience of one southeastern state which has had three serious fires, one bridge being destroyed twice Due to this experience, on a recently constructed long timber bridge, this state has constructed sections of concrete bridge at intervals for fire breaks, placed five gallon fire extinguishers in boxes every 200 feet, and employed a night and day watchman, in addition to paying a considerable amount of fire insurance

Operation costs to traffic in driving over the bridge vary with the type of surfacing on the bridge floor

It is rather difficult to place an exact figure on the value to a community of high class bridging; however, various authorities put it at two per cent, plus or minus, of the first cost It is evident that a beautiful well designed concrete structure does have an æsthetic value which must be taken into consideration

A cost analysis of a bridge built in 1930 by a central state is given in Table I Costs are based on bid prices Interest rates for renewal charges are figured at 3½ per cent and for rental and insurance charges at 5 0 per cent " O " is based on 150 vehicles per day and on a transportation cost of eight cents per vehicle mile on a smooth concrete floor. No salvage value is assumed, nor has the charge for interruption to traffic on the reconstruction of the shorter lived structures been included

TABLE I

Cost Analysis Bridge No 1

Type	Economic Life Years	$\frac{M+R}{C}$	$\frac{I}{C}$	P	O	Actual Annual Cost	Actual Annual Cost plus Traffic Cost
DESIGN NO 1							
Concrete pile bents, concrete girders, concrete floor and concrete hand-rail—43, 27½ ft spans Length 1182 5 lin ft Cost $58,675 00	40–80	2 1	0 0	0 5	980 94	3872 55	$4853 49
DESIGN NO 2 (Contract awarded on this design)							
Creosoted pile bents, steel stringers, concrete floor and concrete hand-rail 54, 22 ft spans Length 1188 lin ft Cost $42,587 00	22–28	4 0	0 5	0 0	985 08	4046 16	$5031 24

Cognizance should be taken that average values which may vary somewhat in different localities have been used for the variables in this analysis The method of attack, however, remains unchanged

In this analysis (Table I) the fallacy of constructing a bridge solely on a basis of first cost is quite evident While the all-concrete type has a higher first cost, the actual annual cost for the concrete type is less As a general criterion a permanent high type structure should be constructed unless clearly shown to be uneconomical by detailed analysis

METHODS OF REDUCING FIRST COST OF CONCRETE BRIDGE STRUCTURES

The first cost of any concrete structure is the product of yardage and unit cost, therefore the fundamental requirement for a reduction in this cost is that the aforesaid factors be reduced With the present increasing traffic and occasional heavy loads, the possibility of a lessening of the loading requirements can not be expected, however several means to effect lower costs can be employed which are:

1 The use of simpler types of concrete structures,
2 Use of higher strength concrete and commensurate stresses in design,
3 Rigid frame structures,
4 Continuous slab viaducts.

1 SIMPLE TYPES OF CONCRETE STRUCTURES

The use of simpler types of concrete structures includes the use of over-flow pavements, culverts, and the more common types of shorter span bridges. In the central and western states, political units with inadequate funds have sometimes made use of concrete over-flow pavements at stream locations on highways with relatively light traffic where its stoppage during the infrequent periods of high water is of slight importance This type of construction affords substantial reductions in cost over any other type of crossing

Multiple concrete boxes, where permissible because of local stream conditions, often afford substantial savings over longer span construction and their use is growing each year Generally where piles may be necessary on the longer span construction, the multiple box type can be constructed with no special foundation preparation. Average estimates prepared by an east central state on a large number of structures for six 10 by 10 foot multiple boxes in comparison with comparable structures is of interest as the relative economy of the multiple box is quite evident The relative estimates follow.

Multiple 6—10 by 10 ft concrete box	100 0%
Multiple 5—12 by 10 ft concrete box	102 0%
1 at 60 ft concrete deck girder	109 0%
3 at 20 ft concrete slabs	114 0%
2 at 30 ft concrete slabs	118 0%
1 at 60 ft steel truss	118 5%
1 at 60 ft concrete through girder	133 0%

For the shorter spans, the most economical permanent substructure generally is the concrete post or the concrete pile bent, the use of either type depending on the conditions of the site. The economy of these types is due to the extensive saving in yardage over the formerly accepted standards utilizing mass concrete J A L. Waddell, in his paper on the “ Suitability of the Various Types of Bridges,” published in 1927, says in regard to the concrete pile bent, “ For permanent work this is the very cheapest kind of construction ” He also brought out the extreme fire hazard of the temporary creosoted pile type, its short life and vulnerability to the ravages of sea worms in salt water.

Typical designs of these two types are shown in Figures 1 and 2. It will be noted in Figure 2, that the particular design shown includes a cantilevered wing-wall on the abutment The approach fill is permitted to sweep around this wing wall and through the opening under the cap at its natural angle of repose

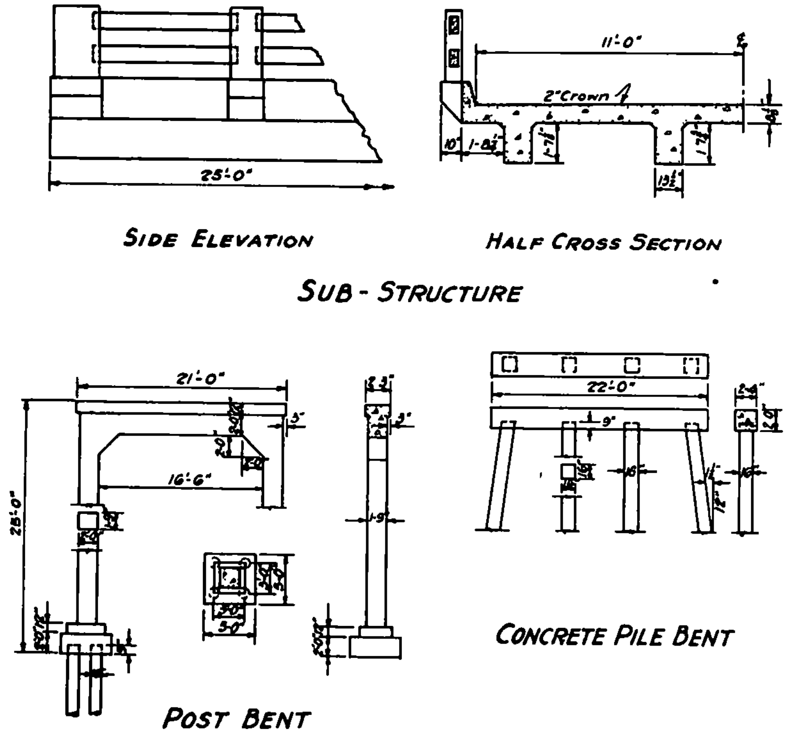

Note - Reinforcement not shown

Figure 1 Typical Concrete Pile and Post Bent Construction in a Southern State

A notable example of the use of concrete pile bent trestle is the structure built across Lake Pontchartrain, La , in 1927 This structure has 700 35 foot concrete girder spans on four pile concrete bents The general details are shown on Figure 3 At times a rate of one mile of completed structure per month was attained The San Mateo bridge over San Francisco Bay, constructed in 1929, is also a notable example of this type of construction This bridge is 7 1 miles long and except for five steel trusses is all of the above type A four pile bent was used, the pile length varying from 45 to 65 feet and the

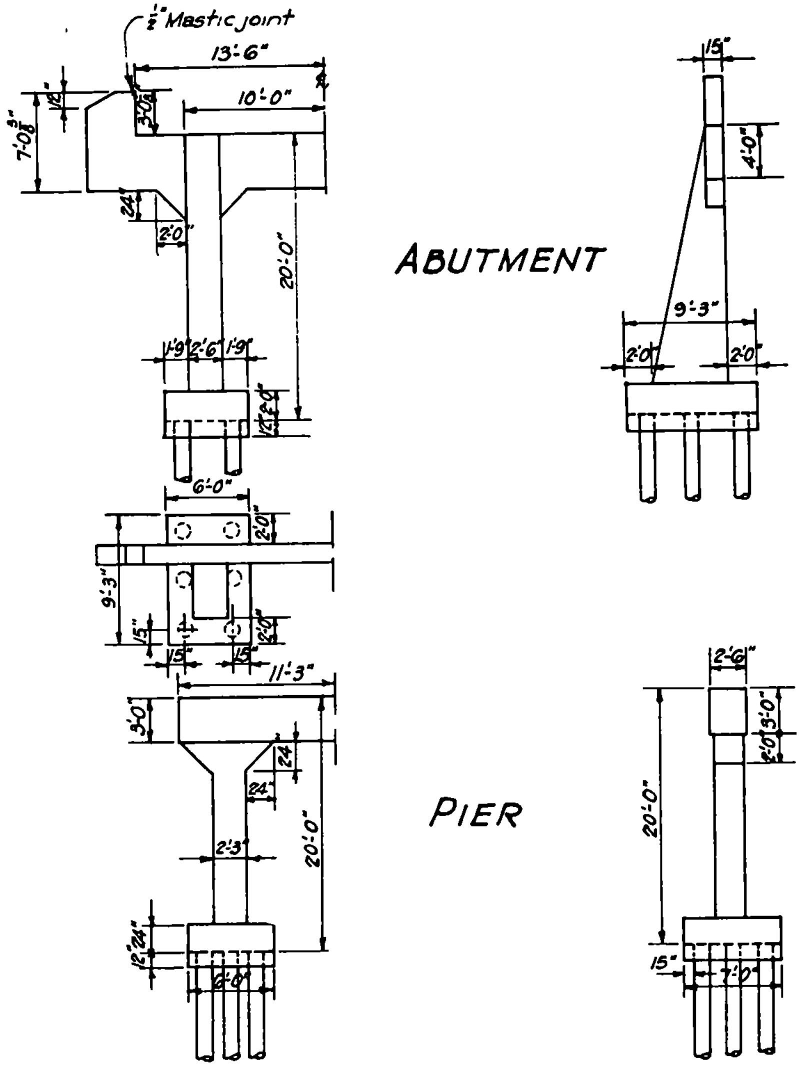

Note—Above substructure is for 25 foot Deck Girder, 24 foot Roadway Reinforcement not shown

Figure 2. Typical Concrete Post Bent Construction in a Central State

cross section from 16 to 24 inches square Each bay is spanned by two pre-cast deck girder slabs identical for each half of the 27 foot roadway Span lengths of 30 and 35 feet were used depending on the depth of water Six slabs or about 300 tons per barge were transported 20 miles from the casting yards.

The general type of super-structure covered in this discussion will usually be either a simple slab for the shorter spans or a deck girder for the longer spans, the relative economy depending on the characteristics of the site The through girder is seldom used today except

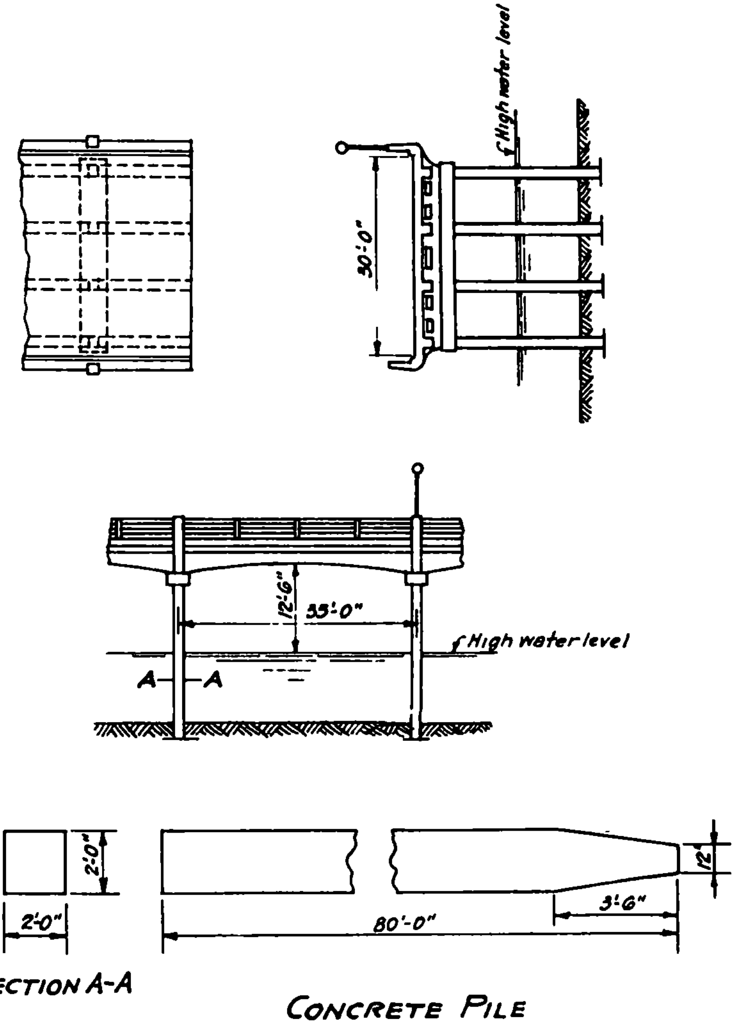

Figure 3. Concrete Trestle Across Lake Pontchartrain

for clearance reasons on account of the impossibility of future widening, which in present-day construction is an important item.

The simplicity of the form work involved is also a factor which tends to reduce the unit cost of the concrete, and this item should be carefully studied

The San Mateo bridge is an excellent example of the pre-cast slab type of construction The elimination of extensive falsework, the centralization of concrete manufacture, and placement, and the ease of transporting the finished slabs all combine for a reduction in cost A method of construction similar to this can often be advantageously utilized

Recently pre-cast concrete bridge railings have been designed which permit removal and replacement on future widening and also aid in more rapid construction as they can be constructed in advance of the time for their placement Details of two typical installations are shown in Figures 4 and 5 It is believed these or similar types of construction have considerable advantage, especially on bridges which may be widened in the future, and their use should provide substantial savings

Concrete floors on all types of bridges have been conclusively proven to be the best type of construction Their advantages have been well brought out by the United States Bureau of Public Roads in "Public Roads," issue of October 1926

2 HIGH QUALITY CONCRETE AND COMMENSURATE UNIT STRESSES IN DESIGN

In attaining the utmost economy in concrete structures, the quality of the concrete will be an important factor The leanest concrete having low strength and other reduced qualities is not always the lowest in cost nor the most economical to use Taken volume for volume, of course, low quality concrete is less costly than high quality concrete However, with the use of high quality concrete and commensurate unit stresses in design, the size of members can be reduced in section with no lowering of the factor of safety until a definite saving in ultimate cost will result

The ultimate strength of properly made concrete is not reached in 28 days, but under ideal conditions the strength continues to increase for an indefinite time The increase after 28 days is relatively slow, but in one sense it may be assumed to be an additional factor of safety, which will, to a limited extent, offset some slight irregularity commonly incident to manufacture

By the application of known principles concrete of a definite strength at a given age can be made

The recently adopted (1931) specification of the American Association of State Highway Officials permits the use of stresses based on the ultimate 28-day strength of the concrete being used on a particular structure The Joint Committee on Standard Specifications for Concrete and Reinforced Concrete recommends the same procedure, but

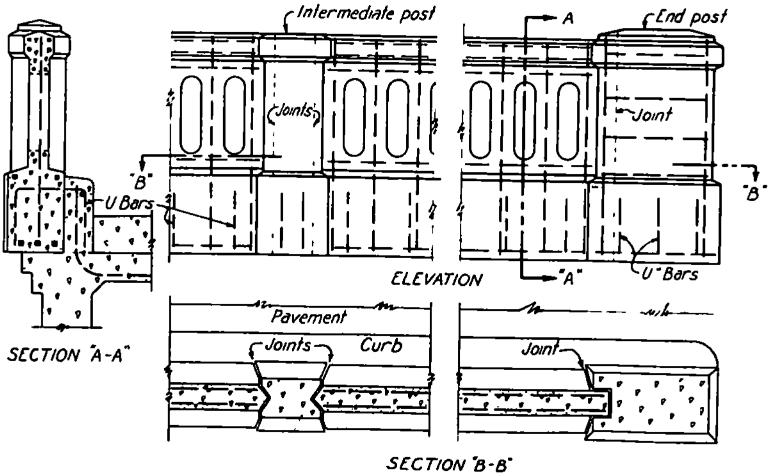

Figure 4. Design of Removable Concrete Bridge Railing. To Detach the Railing the Curb Is Broken Out and the Railing Removed and Replaced in New Position. Constructing a New Curb Anchors the Railing Firmly in Place

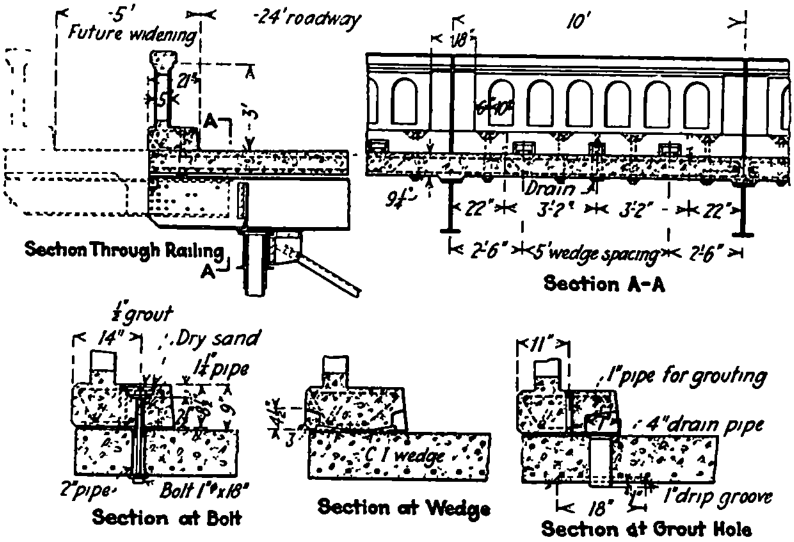

Figure 5 Features of Railing Design That Permit Future Move

permits in a few instances use of stresses slightly higher than those permitted by the A A S H O

The following examples indicate a few of the savings that accrue from the use of 3,000-pound compressive strength concrete and a commensurate unit stress of 1,200 pounds in compression instead of 650 pounds, which is all too commonly used.

> Span lengths may be increased approximately 50 per cent
>
> The thickness of slabs may be reduced 33 per cent for the same span
>
> Of particular interest in pre-cast slab work, the weight of slabs will be reduced so that a given capacity derrick can handle longer spans

In addition to these, greater workability, earlier removal of forms, and shorter period of protection due to increased cement content may each be assigned an economic value that will directly influence the cost of the structure

3 RIGID FRAME BRIDGES

The many distinct advantages of the rigid frame bridge have been appreciated for a number of years, as evidenced by the editorial that appeared in the Engineering News-Record, April 29, 1926, which said in part:

> " One phase of this departure from precedent is represented in Westchester County (N Y), with results so impressive in increased efficiency and æsthetic range as to forecast an important influence on future short span practice The gain in economy, simplicity, and freedom from many common bridge troubles that can be realized by planning the structure as an integral unit is brought clearly into view The proven possibilities and advantages of the continuous type are sufficiently important to claim its consideration for many structures that will have to be built in the years immediately ahead "

The rigid frame bridge of concrete has amply demonstrated its numerous desirable features not only in the structures of this type in Westchester County, but in Texas, California, and elsewhere The principle of continuity as applied to bridges reduces the amount of work done by the structure in supporting a given load by six-tenths that of the non-rigid frame type bridge, in which the abutments or piers merely support the horizontal members It is a fundamental engineering principle, which is evident without proof, that a material economy will be wrought by the structure that accomplishes the same purpose with the minimum amount of work

Until recent years the economy of the rigid frame bridge has been neglected, although its advantages were realized by many engineers

The slenderness that characterizes the members of a rigid frame bridge not only reduces the cost of the main structure but results in a marked saving in the cost of the approaches The effect on the height of the approach fill is illustrated in Figure 6 which shows a T-beam bridge super-imposed on a frame bridge, and also a fixed arch bridge compared with a rigid frame In the latter case the horizontal earth pressure performs in part the function of the heavy abutments thereby not only reducing the amount of material involved in the construction but minimizing the quantity of excavation

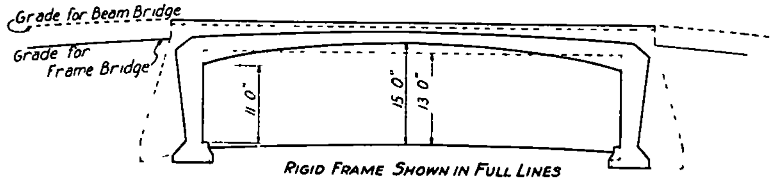

RIGID FRAME SHOWN IN FULL LINES
BEAM SLAB AND ABUTMENTS SHOWN IN DASH LINES

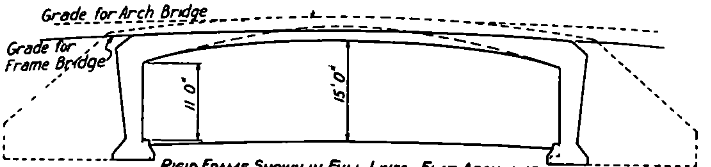

RIGID FRAME SHOWN IN FULL LINES - FLAT ARCH AND ABUTMENTS SHOWN IN DASH LINES (IN RIGID FRAME CONSTRUCTION, LATERAL EARTH PRESSURE PERFORMS IN PART THE FUNCTION OF AN ABUTMENT)

Figure 6 Comparison of Rigid Frame Design with Usual Forms of Bridge Construction

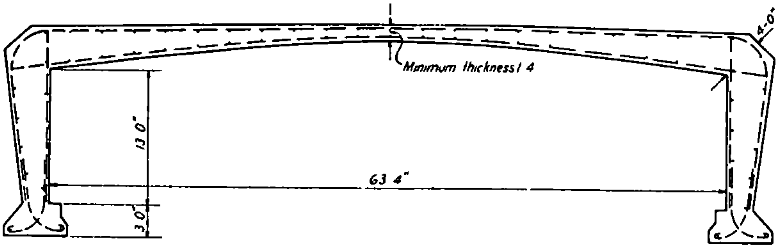

Figure 7. Typical Details of Solid Section Rigid Frame Bridge

The slender proportions of a typical rigid frame bridge are shown in Figure 7, which shows a section of the bridge on the Saw Mill River Parkway in Westchester County, designed by A G. Hayden The simplicity of form work and reinforcing, as well as the relatively small quantity of concrete required for a rigid frame bridge is evident from this illustration

Typical of the saving that is commonly realized through the use of a rigid frame method of analysis, is the example submitted by Mr Hayden in the Engineering News-Record, December 1, 1927 Table II is taken from this article It brings out the saving that is made in both the main structure and the approaches The cost of the reinforced concrete rigid frame bridge, including the approaches, is shown to be 83 per cent of the next cheapest type of construction, neglecting the economic value of appearance and maintenance of the structure It has been repeatedly demonstrated by the Westchester County Park Commission that rigid frame bridges show savings of 20 per cent over any other type

TABLE II

Comparative Costs of Bridge Types

Clear width 40 feet, clear span 64 feet, under-clearance for steel girder 13 feet, rigid frame 11 feet at curb and 15 feet at center

	Main Structure	Approaches	Total
Reinforced Concrete Solid Frame	19,000	26,500	45,500
Steel Girder	21,800	33,100	54,900
Reinforced Concrete Fixed Arch	25,900	30,500	56,400
Reinforced Concrete Ribbed Frame	17,700	34,400	55,100

Other interesting cost data are those supplied by the Long Island State Park Commission for the Northern State Parkway bridges Practically all of the bridges which have been designed under the jurisdiction of this Commission during the past year are of the true rigid frame type, similar to those used in Westchester County A modified rigid frame type, in which the soffit takes the shape of an elliptical arch, has also been used Studies made by the Commission indicate that the true rigid frame type is usually the more economical of the two Local conditions have at times dictated the adoption of the modified type, even though slightly more expensive In Table III cost and construction data are given for seven bridges on the Northern State Parkway and two on the Southern State Parkway Although many of these bridges have expensive stone facings, which represent from 15 to 25 per cent of the contract price, the cost per square foot is remarkably low

The economic span limits of the rigid frame type bridge have not been definitely established Although a number of such bridges have been built having spans under 30 ft it is generally considered that for such short spans the reinforced concrete T-beam floor support on concrete abutments is the more economical The economy of the rigid frame type of construction for spans between 30 ft and 100 to 120 ft, has been amply demonstrated as compared with concrete arch or T-beam bridges and steel girder bridges With increasing knowledge of the principles of design and the methods of construction involved,

TABLE III

NORTHERN STATE PARKWAY BRIDGES

Bridge and Location	Span		Width		Facing	Type	Contract Price	Cost per sq ft not including approaches
	Feet	Inches	Feet	Inches				
Motor Parkway No 1	75	0	47	0	Stone	Modified Rigid Frame (Elliptical)	$40,590	$7 60
Lakeville Road	63	0	66	0	Stone	Modified Rigid Frame (Elliptical)		
Motor Pkwy (La)	67	8	46	0	Stone	Modified Rigid Frame (Elliptical)	37,280	9 10
New Hyde Park Road	64	0	54	0	Stone	Modified Rigid Frame (Elliptical)	41,617	8 70
Shelter Rock Road	61	0	50	0	Stone	Modified Rigid Frame (Elliptical)	35,060	7 70
Searingtown Road	53	0	57	0	Concrete	True Rigid Frame	38,250	7 40
Mineola Ave	51	0	57	0	Concrete	True Rigid Frame	31,920	7 80
SOUTHERN STATE PARKWAY BRIDGES								
Massapequa-Glen Cove Road	53	3	50	0	Concrete	True Rigid Frame	30,041	7 40
Bethpage Road	60	10	68	0	Stone	Modified Rigid Frame (Elliptical)	33,460	6 50

rigid frame concrete bridges may reasonably be expected to demonstrate their economy for even longer spans

In addition to the lower cost of frame bridges constructed of concrete, they possess great inherent strength and rigidity which insure their safety Extraordinary loads which would cause failure or serious distress in the ordinary type bridge do not affect the rigid frame structure adversely From the very nature of the construction, any overloading of one part of the bridge simply causes the stresses to be transferred to other parts until a balance is obtained The danger of collapse, due to overstress, is practically eliminated Maximum clearance is obtained for the roadway or stream by the use of a solid slab or barrel type rigid frame bridge Such bridges offer the least possible obstruction to stream flow, so that in periods of flood the danger of the bridge being carried away is minimized This is an item to be considered in the selection of an economical bridge type, since the mortality of bridges due to floods is a matter of serious moment

It is possible to construct a truly beautiful bridge of the rigid frame type for it possesses almost unlimited architectural possibilities The accompanying pictures, Figures 11 and 12, illustrate bridges of this type

4 CONTINUOUS LONG SPAN ONE-WAY REINFORCED SLAB BRIDGES

The continuous long span one-way reinforced slab bridge has been brought to a high state of development in the State of Washington during recent years The economy of this type of construction has been demonstrated in a number of long viaducts in that state The Woodway Park Bridge built by Snohomish County, described in Engineering News-Record for February, 1930, is of this type Although the columns were extremely high, in some cases being 55 feet from top of footings to underside of beams, the structure cost only $73 per linear foot of bridge The roadway is 20 feet wide, with a four-foot walk on one side, so that the square foot cost was very low, in fact, comparable in first cost with far less durable types of construction Photographs of the completed structure and design details are shown on Figures 8, 9, and 10

In this type of bridge a heavy, solid slab is employed It is thickened at the supports to give additional resistance to negative moments and to stiffen the slab This thickening of the slab also serves as the floor beam, which is wide and shallow There are no longitudinal beams or girders, which greatly simplifies the form work, resulting in a material economy since panel forms can be used and numerous repetitions obtained

Other factors that contribute to the remarkable economy of this type of bridge are the use of large reinforcing bars which avoid

Figure 8. Underside of Woodway Park Viaduct

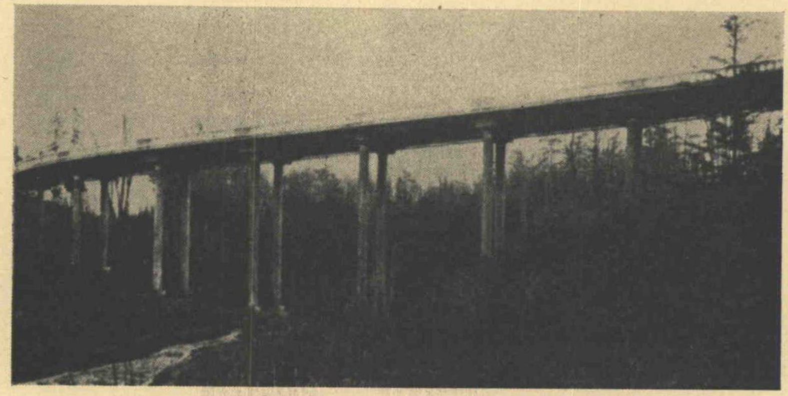

Figure 9. General View Woodway Park Viaduct

crowding in the slab, and the ease with which the concrete can be placed A more economical concrete mixture can be used than where small narrow members are involved, since a relatively stiff mix can be placed easily The lower water-cement ratio that is used and the fact that the thick slab affords almost ideal curing gives a concrete of high strength Commensurate working stresses have been used in the Washington viaducts of this type, so that advantage has been taken of the actual strength of the concrete

In those cases where clearance is a factor, this type of bridge is most suitable as a minimum of depth is required for the deck In the case of the Snohomish County viaduct, having 40-foot spans, the total thickness of the slab and floor beams is 37 inches, which is comparatively little considering that the bridge was designed for a loading of 20-ton trucks each with 32,000 pounds on the rear axle with 100 per cent impact on the rear axle of one truck passing another at mid-span

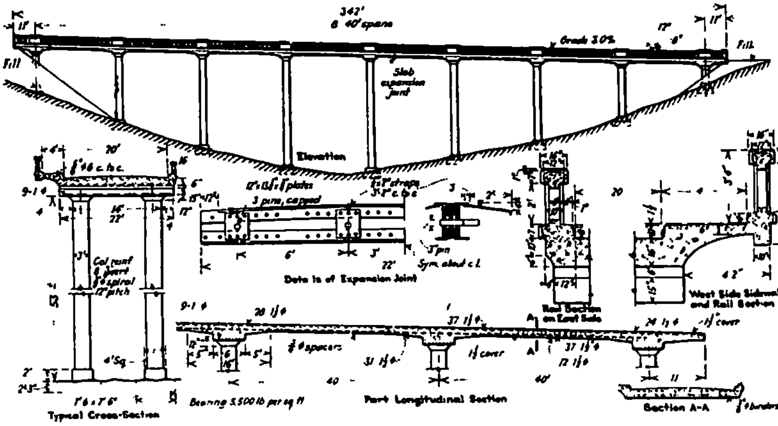

Figure 10. Details of the Woodway Park Concrete Viaduct, Seattle

An important feature of the solid slab type of bridge is the distribution of heavy concentrated wheel loads Even though the structure is subjected at some time to unusual loads for which it was not designed, the solid slab readily distributes the concentration of loading so that no part of the structure will be over stressed

One of the inherent features of concrete construction is its continuity Full cognizance is taken of this characteristic in these continuous solid slab bridges, which is favorable to economical design To this end the number of expansion joints is reduced to the absolute minimum, only one joint being used in the Woodway Park bridge, which is 342 feet long One of the chief maintenance expenditures on concrete bridges is thus practically eliminated. The designer, W F Way, says that he would have considered it satisfactory to omit all joints had the end columns been longer.

The simplicity of construction and its marked economy, as well as the pleasing appearance of the bridges in which it is used, recommend the use of continuous one-way reinforced solid slab construction for long trestles across wide ravines or swamps.

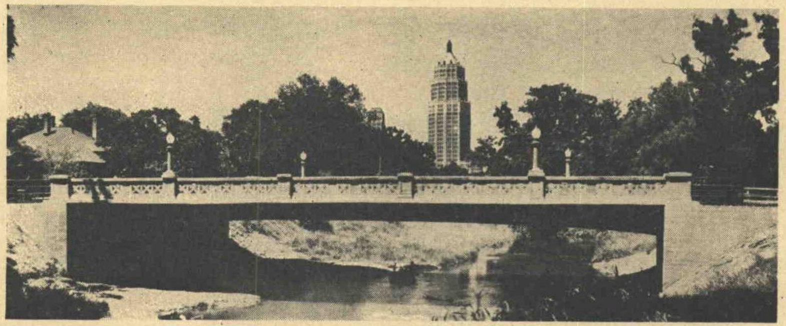

Figure 11. Rigid Frame Bridge at San Antonio, Texas

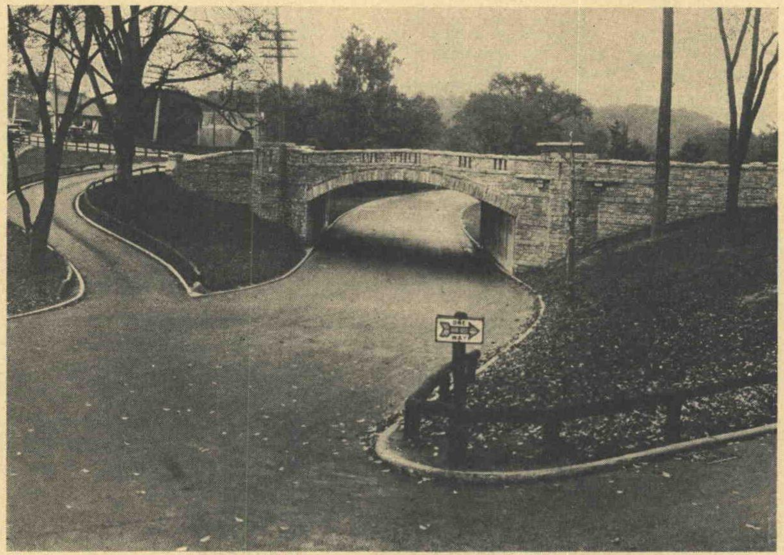

Figure 12. Rigid Frame Bridge, Bronx River Parkway, New York

RÉSUMÉ AND CONCLUSIONS

It has been brought out that consideration of all the factors entering into the ultimate cost of a bridge will generally indicate the advisability of building for permanence rather than for temporary expediency, unless the expected life of the bridge is known to be definitely limited to a relatively few years. This latter point should be known for a certainty before temporary structures are decided upon. Even if the life is thought to be definitely limited, it is still a question whether consideration of safety, convenience and reduction of maintenance troubles do not more than compensate for the relatively small savings in first cost entailed through the use of a temporary rather than a permanent structure

A review of the changes in highway practice during the past 15 years suggests that it is a difficult matter for anyone to forecast just what locations for structures may be considered as temporary and which permanent Moreover, this review will also suggest that relatively few bridges have been totally abandoned

Consideration of the above facts should lead to considerable caution on the part of the bridge engineer when it comes to deciding between permanent and temporary structures

Limitation of funds available for first cost is another matter and one which can be more closely evaluated Even here, though, caution should be exercised in deciding to save in first cost It would seem that such initial economy is only advisable where the size of the structure is relatively large or where the highway building unit in charge of the work is burdened with the necessity for constructing a great number of costly structures in a relatively short space of time

Consideration of the problem of effecting savings in the cost of highway bridge structures indicates that the following conclusions are justified

I A permanent high type structure generally results in the least ultimate cost and also in the greatest value to the users

II It is a difficult matter for anyone to forecast which locations for bridge structures may be considered permanent and which temporary

III It is believed that relatively few structures have been totally abandoned

IV. Where a doubt exists as to the advisability of building a temporary or permanent structure the doubt should be resolved in favor of the permanent structure wherever possible

V Before going to the cheapest first cost type of structure, the engineer should consider ways of reducing first cost without sacrificing the essentials provided by long life materials

VI Temporary structures should only be erected where the location is clearly indicated as being temporary or where funds available for construction are strictly limited

VII Locations on main highways are generally as permanent as our present knowledge will allow. Therefore, structures on these highways should be of high type construction since most of them will probably serve for their expected life.

VIII. Locations on the bulk of our local highway mileage and on which low traffic densities prevail will probably be little changed for many years, if ever Considerations of economy and serviceability indicate that structures on such roads should be of permanent construction

Certain lines of investigation are suggested as desirable to secure accurate data on which the importance of the question of permanent versus temporary structures can be evaluated They are

1 What percentage of the bridge structures erected on highways are abandoned before the expiration of their expected life because of changes in location? It seems to be indicated that this percentage is rather low and that it is much smaller than engineers have been led to believe At any rate no accurate information exists now.

2 In how many cases have low cost structures been erected at locations which were deemed to be temporary at the time the structure was designed but where the period of use indicates that a permanent structure would have been justified?

3. How many low cost structures have had to be replaced by permanent structures before their economic life had expired?

4. How important is the salvage value of highway bridges? In how many cases can the bridge material at the old location be used in a new location which is adjacent to the old one?

5 Except in well defined cases, how is the engineer to determine whether the location will be temporary or permanent?

6 What data are available to show the cost of constructing and maintaining detours around temporary structures which have had to be replaced?

7 Has any study been made of the relative safety to traffic in passing over temporary structures as opposed to permanent ones?

8 Cost data should be developed which will allow ready comparison of the economics of various type structures for given conditions Complete maintenance data on the various types of structures and under the variable conditions existing throughout the country are practically non-existent

THE ECONOMICS OF LOW COST BRIDGES

J F Seiler
American Wood Preservers' Association

SYNOPSIS

The principal factors which determine economy of bridges are first cost, interest rates, service life and maintenance These factors are analyzed and applications are made to methods for calculating the total carrying cost Experience is cited to show that creosoted timber in bridges may be expected to last until the structures are retired from obsolescence, which, according to the author, should be from 35 to 40 years Maintenance expense may be expected to commence after approximately 15 years of service and reach a maximum in about 35 years