ANALYSIS OF LOADS AND SUPPORTING STRENGTHS, AND PRINCIPLES OF DESIGN FOR HIGHWAY CULVERTS

By Professor M. G. Spangler

Research Associate Professor of Civil Engineering, Iowa State College

SYNOPSIS

The purpose of this paper is to present the principles of the Marston Theory of loads on underground conduits which are applicable to the design of highway culverts and to give usable values of many of the factors which influence the loads and supporting strengths of this class structures. Several examples of structural design of both rigid and flexible pipe culverts are included. Throughout the paper, emphasis is placed upon the fact that loads and supporting strengths of culverts may vary widely and that the safe height of fill over a culvert depends as much or more upon certain environmental construction conditions as it does upon the inherent strength of the conduit structure itself.

When analyzing the loads on underground conduits which are caused by the overlying fill, they may be conveniently grouped into two main classes, viz., ditch conduits and projecting conduits. These classes are defined and illustrated in the paper and appropriate formulas are presented for computing the loads on each class. It is pointed out that the loads due to earth fills are dependent upon a number of factors, such as the width of ditch, the projection ratio, the settlement ratio, the width of the conduit and the height of fill. Also, the affect on load of properties of the overlying soil such as its unit weight and coefficient of internal friction is discussed and the principles governing the transmission of live loads through shallow soil covering are presented. A number of special cases of culvert construction are described, several of which may be relied upon to protect the conduit from excessively high loads in the case of unusually high fills over the structure.

The last half of the paper is devoted to a discussion of methods of testing rigid circular pipes and to methods of bedding the pipes in field installations and the determination of the supporting strength of this type of conduit when laid in various classes of bedding conditions. In the case of rigid projecting conduits, the field supporting strength is influenced to a considerable extent by the active lateral pressure of the soil fill material which acts against the sides of the pipe and helps to support the vertical load thereon. This fact is taken into account in evaluating the supporting strength of this class. Also, some principles governing the choice of a suitable factor of safety for rigid types of conduits are discussed briefly.

The supporting strength of flexible structures such as corrugated metal pipe culverts, is evaluated on the basis of the deflection of the flexible pipe under the influence of the vertical load and of the passive resistance pressure of the fill material at the sides of the pipe during their outward movement against the soil as deflection progresses. A formula for estimating the ultimate deflection of a flexible pipe culvert is given, for pipes which are installed without struts or other pre-stressing devices

The design of a culvert or a standardized class of culverts for conveying surface drainage waters or pedestrian or livestock traffic beneath highways, railroads, airports or other types of engineering facilities involves three principle phases or procedures. They are: (1) the hydraulic or functional design wherein decisions are made concerning the size or the hydraulic capacity of the conduit and its position in plan and elevation in order that it may satisfactorily perform its intended function, (2) the determination of the loads to which the conduit will be subjected in service due to the soil overburden and to the traffic loads acting at the surface of the overlying embankment and (3) the determination of the required supporting

strength of the conduit in order that it may adequately resist those loads without failure and with an appropriate factor of safety.

The Iowa Engineering Experiment Station has for many years conducted research in the field of load determination and supporting strength of underground conduits and has published a considerable number of bulletins and technical papers dealing with various phases of this research. The principles evolved from these studies are collectively known as "Marston's Theory of Loads on Underground Conduits," named for Anson Marston, Dean Emeritus of Engineering at Iowa State College, who initiated these researches and personally conducted them for many years while he was Director of the Iowa Engineering Experiment Station.

The purpose of this paper is to present the principles of the Marston Theory which are applicable to the design of highway culverts and to give usable values of many of the factors which influence the loads and supporting strengths of this class of structures, together with several examples of structural design of both rigid and flexible pipe culverts, which may assist the reader in the application of an appropriate phase of the theory to his particular problem. No attempt will be made to discuss the hydraulic or functional phase of culvert design in this paper. Its scope will be limited to the load and supporting strength phases only.

The structural performance of an underground conduit is dependent upon a number of factors and conditions which need to be carefully taken into account in the design of such a structure. One often hears the question asked, "What is the safe height of fill which a 2000 D culvert pipe will carry?" Such a question cannot be answered unless and until considerably more information concerning the conditions under which the pipe is to be installed and loaded are available, since the test strength of the pipe, important though it is, is only one of a number of facts which must be known before an intelligent estimate of the maximum safe height of fill which the pipe will carry can be made. As a matter of fact, a pipe of a given quality as revealed by a standard strength test may very readily support a fill in one installation which is double or more the height of fill which it could support in another place where the conditions which affect the load and the ability of the pipe to carry its load are less favorable.

Many highway engineers, pipe manufacturers and salesmen are not familiar with the structural characteristics of culvert installations which make such wide variations in safe heights of fill both possible and probable. Because of this lack of familiarity, perfectly good culvert pipes continue to be installed in locations and under conditions which cause them to be overloaded.

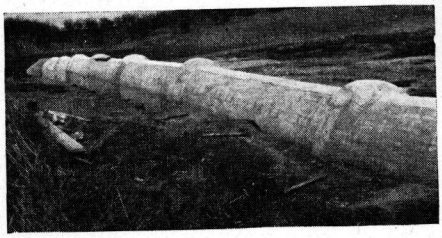

Figure 1. Reinforced Concrete Arch Culvert Prior to Construction of Fill

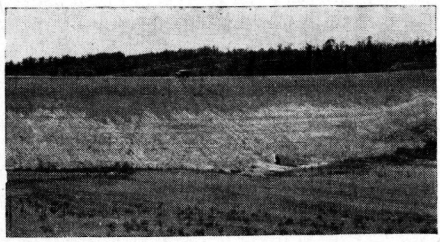

Figure 2. Same Culvert as in Figure 1 after Fill was Completed. Important details which influence loads are covered up.

Also, because the height of fill which it is safe to construct over a culvert pipe depends so intimately upon the installation conditions and because these influencing conditions are practically always covered up and obliterated when the embankment is constructed, so-called "condition surveys" of successful culvert structures are of doubtful value as criteria for safe heights of fill for future construction. Only in those rare instances where adequate detailed information is available concerning the conditions under which the culvert was installed can such a survey yield accurate scientific data upon which it is safe to rely. These facts are illustrated by the photographs in Figures 1 and 2.

Marston's theory provides a sound technical basis for estimating culvert loads and safe heights of fill and serves as a guide to good practice in the installation of all types of underground conduits to obtain the best and most economical results. Although the theory and the research upon which it is based cover a wide segment of the field of underground conduit design, there are still a number of unanswered questions which need further study and new problems in this field are continually arising. Nevertheless, Marston has provided a basic framework within which these problems can be solved, and it is believed that highway engineers will profit by a careful study of the principles involved in the theory.

LOADS ON UNDERGROUND CONDUITS

When considering the loads produced on underground conduits due to earth fills, they may conveniently be divided into two major classes or groups on the basis of construction or environmental conditions which affect the development of earth loads on them. These classes are:

1. *Ditch Conduits*, which are conduits installed in relatively narrow ditches dug in passive or undisturbed soil and then covered with earth backfill which extends to the original ground surface. Examples of this class of conduits are sewers, drains, water mains, etc.

2. *Projecting Conduits*, which are conduits installed in shallow bedding with their tops projecting above the surface of the natural ground, and then covered with an embankment. Railway and highway culverts are good illustrations of this class of conduits.

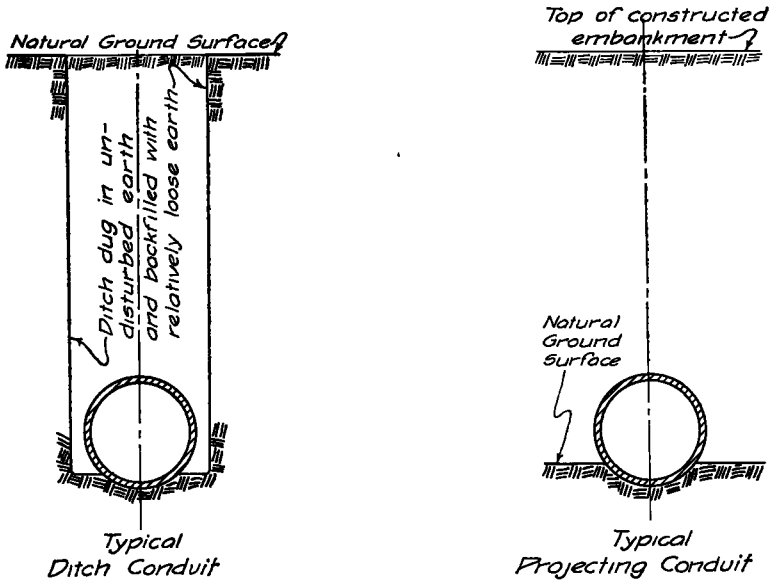

Figure 3

Also, those conduits which are installed in ditches wider than about two or three times the maximum outside conduit width may be treated as projecting conduits.

The essential elements of these classes of conduits are illustrated in Figure 3. Some conduits may not fall wholly within one or the other of these classes, but may have some characteristics of both classes. These constitute special cases of loading and will be discussed later in this paper.

LOADS ON DITCH CONDUITS

When a conduit is placed in a ditch not wider than about two or three times its outside breadth, and covered with earth, the backfill which is relatively loose and uncompacted

compared to the natural soil in which the ditch is dug, will settle downward. This downward movement or tendency for movement of the prism of earth in the ditch above the pipe, produces vertical frictional forces or shearing stresses along the sides of the ditch which act upward on the prism of soil within the ditch and help to support the backfill material. These upward shears act on both sides of the backfill throughout its full height from the top of the conduit to the ground surface. Assuming the cohesion between the backfill material and the sides of the ditch to be negligible, the magnitude of these vertical shearing stresses is equal to the active lateral pressure exerted by the earth backfill against the sides of the ditch, multiplied by the coefficient of friction between the two materials. This assumption of negligible cohesion is justified on two accounts; first, because even when the ditch is dug in and backfilled with cohesive material, considerable time must elapse before effective cohesion between the backfill material and the sides of the ditch can develop after backfilling, and second, because the assumption of no cohesion yields the maximum probable load on the conduit. The maximum load may develop at any time during the life of the conduit due to heavy rainfull or other causes which may eliminate or greatly reduce cohesion between the backfill and the sides of the ditch.

Marston's theory of loads on ditch conduits leads to the load formula (*1*)[1]

$$W_c = C_d w B_d^2 \qquad (1)$$

in which:

W_c = load per unit length of conduit,
C_d = a load coefficient, $\frac{H}{B_d}$
w = unit weight of the backfill material,
B_d = width of the ditch,
H = height of fill.

The load coefficient, C_d, in formula 1 is a function of the ratio of the height of fill to the width of ditch, $\frac{H}{B_d}$, and of the coefficient of internal friction of the backfill soil. Values of C_d may be obtained readily from the diagram of Figure 4 for appropriate values of $\frac{H}{B_d}$ and the kind of soil of which the backfill is composed.

Formula 1 is an expression for the total vertical load within the ditch width at the level of the top of the conduit. The portion of this total load which will be carried by the conduit will depend upon the relative rigidity of the conduit and of the fill material between the sides of the conduit and the sides of the ditch. In the case of very rigid pipes, such as burned clay, concrete, or heavy walled cast iron pipe, the side fills may be relatively compressible and the pipe itself will carry practically all the load. On the other hand, if the pipe is a relatively flexible, thin-walled pipe and the side fills are thoroughly tamped in at the sides of the pipe, the stiffness of the side fills may approach that of the conduit and the load on the structure will be reduced by the amount of load the side fills are capable of carrying.

For the case of a flexible ditch conduit and thoroughly tamped sidefills having essentially the same degrees of stiffness as the conduit itself, the load on the conduit may be reduced by the ratio of the width of the conduit to the width of the ditch and the load formula for this case will be

$$W_e = C_d w B_e B_d \qquad (2)$$

in which:

B_e = the outside width of the conduit.

The width of ditch, B_d, is the actual width of a normal, parallel sided ditch. In case the ditch is constructed with sloping sides, experiments (*1*) (*9*) have shown that the width of ditch at or slightly below the top of the pipe is the proper width to use in the load formula.

These ditch conduit formulas, with proper selection of the physical factors involved give the maximum loads to which any particular conduit may be subjected in service; but which, on the other hand, due to the development of cohesion, or other causes, any particular conduit may escape for a long time, sometimes until its removal for other causes than load failure. Experiments and field observations show that the load on a conduit at the time the fill is completed is usually less than it will be at some later time. That is, the

[1] Italicized numbers in parentheses refer to literature cited at the end of the paper.

load keeps building up for a period after the maximum height of fill is reached. This lag characteristic has been observed to amount to as much as 20 to 25 percent of the initial total load, and it may require several years to develop in extreme cases. It accounts for the fact that sewers and other conduits which have been observed to be structurally sound immediately upon completion are sometimes found to be cracked some months or years later.

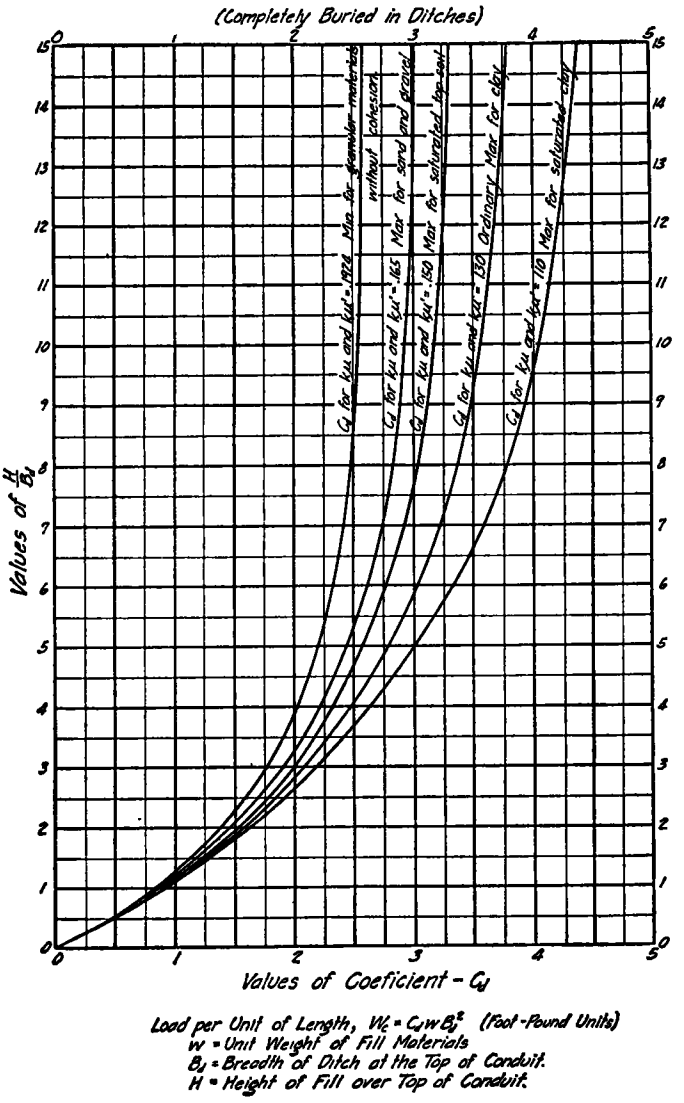

Figure 4. Computation Diagram for Loads on "Ditch Conduits." (Completely Buried in Ditches)

LOADS ON PROJECTING CONDUITS

Projecting conduits as defined and as the name implies, are installed with their tops projecting some distance above the natural

ground surface. They may be of any shape such as circular, rectangular or elliptical, and may be made of any material such as concrete, burned clay, cast iron, corrugated metal, or wood, and may possess any degrees of rigidity from the very rigid concrete pipes and monolithic box culverts to the very flexible, light weight corrugated metal pipes.

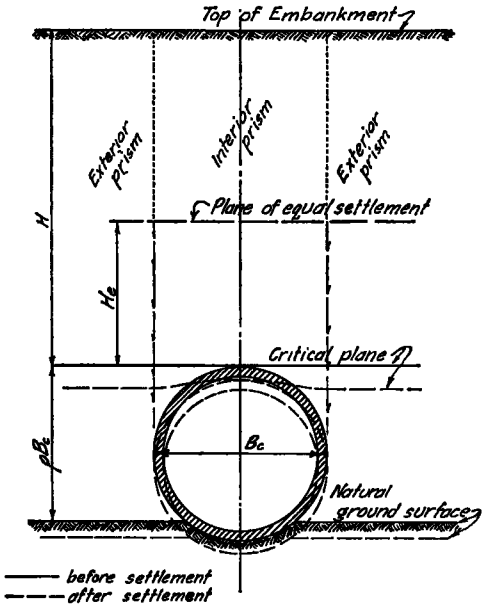

PROJECTING CONDUIT

Figure 5. Projecting Conduit

As a *basic case* for studying the action of an embankment over this type of conduit, consider first a rigid structure resting on an earth foundation which settles under the structure the same amount as the natural ground adjacent to it as shown in Figure 5. The embankment over the conduit may be thought of as consisting of three masses or prisms of soil, one of which is less in vertical height than the other two. This is the prism directly over the conduit between the vertical planes which are tangent to its sides and will be referred to as the "interior prism." The other two masses of soil are those on each side of the structure adjacent to the tangent vertical planes. These will be called the "exterior prisms." The load on a projecting conduit is equal to the weight of the interior prism plus (or minus) a friction or shear increment which is transferred to (or from) the interior prism by virtue of unequal settlement of this prism in relation to the settlement of the exterior prisms.

It is evident that the height of the interior prism will be less than the exterior prisms by the distance which the conduit projects above the natural ground. This distance equals the projection ratio p times the outside width of the conduit B_c. In accordance with the well-known phenomenon that a high prism of earth will settle more than a lower prism, there is a tendency for the exterior prisms to settle more than the interior prism and for downward friction forces or shearing stresses to be exerted along the tangent vertical planes bounding the interior prism. The magnitude of these shearing stresses, again neglecting cohesion, will be equal to the active lateral pressure at these planes, multiplied by the coefficient of internal friction of the fill material. These shearing stresses, in this basic case, are additive to the weight of the interior prism of soil and cause the load on the conduit to be greater than this weight.

It is recognized that definite shearing planes between the prisms of soil over and adjacent to a projecting conduit do not actually exist in an earth embankment and that, in all probability, the transfer of shearing stresses from one prism to another is accomplished through more or less narrow zones of the filling material. Nevertheless, the assumption of actual vertical shearing planes was employed for convenience in developing the theory, and load measuring experiments indicate that the assumption is valid.

If the embankment is not very high, these shearing stresses may extend upward from the conduit completely to the top of the embankment. In the case of higher fills, the shearing stresses will not extend to the surface, but will terminate at some horizontal plane between the top of the conduit and the top of the embankment, known as the "plane of equal settlement." The distance between the top of the conduit and this plane is called the "height of equal settlement."

The plane of equal settlement is defined as the horizontal plane in the embankment at and above which the settlements of the interior and exterior prisms of soil are equal. Above the plane of equal settlement there is no

tendency for relative movement between the three adjacent prisms and no shearing stresses are generated along the boundaries of the interior prism above this plane, whereas below it, relative movements do have a tendency to occur and shearing stresses are developed. It is evident from these facts that the height of equal settlement is an important factor in load production on projecting conduits, and the settlement characteristics which control this factor should be well understood by those interested in culvert design.

The fact of a plane of equal settlement in this basic case is brought about by the transfer of pressure, by shear, from the exterior prisms to the interior prism. Since the vertical deformation of a prism of material due to its own weight is a function of its height as well as the characteristics of the material, normally the summation of deformations from the bottom of a prism upward will be at a greater rate in a high prism than in a lower one if they act independently of one another. In the case of projecting conduits, the soil prisms are in contact with each other, and the exterior prisms transfer a part of their vertical pressure to the interior prism. Because of this stress transfer the rate of summation of vertical deformations will be reduced in the exterior prisms and increased in the interior prism. Therefore, the total summation of deformations in the interior prism will approach that in the exterior prisms as the height increases, and the height at which they become equal is the height of equal settlement.

The existence of a plane of equal settlement was first announced by Marston (*3*) in 1922 on the basis of pure mathematical reasoning and a formula for evaluating its height was developed at that time. Since then the actual existence of such a plane has been demonstrated by measurements of the settlements of the soil both over and adjacent to some experimental conduits.

A very striking and convincing demonstration of the existence of shearing stresses below a plane of equal settlement while none existed above this plane was provided in one of Marston's early experiments. An experimental culvert, 42 in. in diameter, resting on certain weighing devices was loaded with a pit run gravel embankment built to a height of about 16 ft above the top of the culvert. Well points were driven along the vertical planes between the interior and the exterior prisms to various depths and water was poured into them in sufficient quantities to make the gravel fill very wet in the vicinity of the well points. These operations caused no effect on the weighed load on the culvert, until the well points were driven below the theoretical height of equal settlement, which was about 6.6 ft. in this case, when the addition of water caused a distinct reduction of the load on the culvert. It was apparent that reducing the coefficient of internal friction by saturating the fill material below the plane of equal settlement caused a reduction in the shearing stresses transferred to the interior prism, which was reflected in a reduction of the load on the culvert, whereas wetting the material above this plane had no effect on the load.

The Projection Ratio

The vertical distance which the top of a conduit projects above the natural ground surface adjacent to the conduit divided by the outside width of the conduit is defined as the projection ratio, p. It is an important factor in determining the fill load on a conduit. The product of the projection ratio and the width of the conduit, pB_c, represents the difference in height between the interior and exterior prisms of soil in the overlying embankment.

If the natural ground surface adjacent to the conduit is fairly level, the evaluation of the projection ratio is a simple matter, and it is readily obtained from a profile of the ground surface taken in a direction transverse to the barrel of the conduit. If the ground surface exists on a slope, the true value of the projection ratio is not so obvious. In cases of this kind it is recommended that the average vertical distance from the ground surface to the top of the conduit within lateral distances on each side equal the width of the conduit be taken as the distance pB_c. In other words, as a working hypothesis, each of the exterior prisms may be considered to have a width equal to that of the conduit itself.

The Settlement Ratio

The basic settlement situation described above is practically always modified by two additional factors which must be taken into consideration when determining the load on a projecting conduit. The first of these is the settlement or subsidence of the natural round

under the exterior prisms adjacent to the conduit; and the second, the settlement of the top of the conduit. The downward movement of the top of the conduit is equal to the sum of the settlement of the foundation of the structure and the distortion or shortening of its vertical dimension. The settlement of the ground adjacent to the conduit augments the downward movement of the two exterior prisms of earth, which was described under the "basic case." The settlement of the top of the conduit has the tendency to neutralize this action by reducing the relative movement between the interior and exterior prisms. Indeed, if the conduit is sufficiently flexible or is placed on a very yielding foundation, or both, the top of the conduit may settle enough to permit the interior prism to move downward a greater amount than the exterior prisms. When this occurs, the direction of the induced shearing stresses is reversed, and they are subtractive from the weight of the prism of earth over the conduit. There still may be a plane of equal settlement even though the direction of relative movements is reversed, because although the *rate* of summation of settlements in relation to height above the conduit for the interior prism is less than that in the exterior prisms due to the reduced pressure, the *total* settlement is augmented by the settlement of the top of the conduit, which causes the whole interior prism to move downward.

In this connection it is convenient to define a "critical plane," which is the horizontal plane in the fill material at the level of the top of the conduit at the beginning of construction of the embankment and before settlements have begun to develop. With this definition in mind, the previously stated facts concerning direction of the induced shearing stresses may be simplified by saying that when the critical plane settles more than the top of the conduit, the shearing stresses act downward on the interior prism and when it settles less they act upward.

It is this difference in the settlements of the top of the conduit and the critical plane which causes very wide differences in the loads on projecting conduits, even when the height of fill in various cases may be the same. The magnitude of the load is influenced both by the direction and the relative magnitude of the difference in settlement between these two elements.

A neutral or transition case occurs when the top of the conduit settles downward an amount just equal to the settlement of the critical plane. When this occurs the plane of equal settlement is right at the top of the conduit and coincident with the critical plane; the interior and exterior prisms of earth move downward equally throughout their full height and no shearing stresses are induced, with the result that the load on the structure is equal to the weight of the interior prism of earth which is directly over it. Some typical settle-

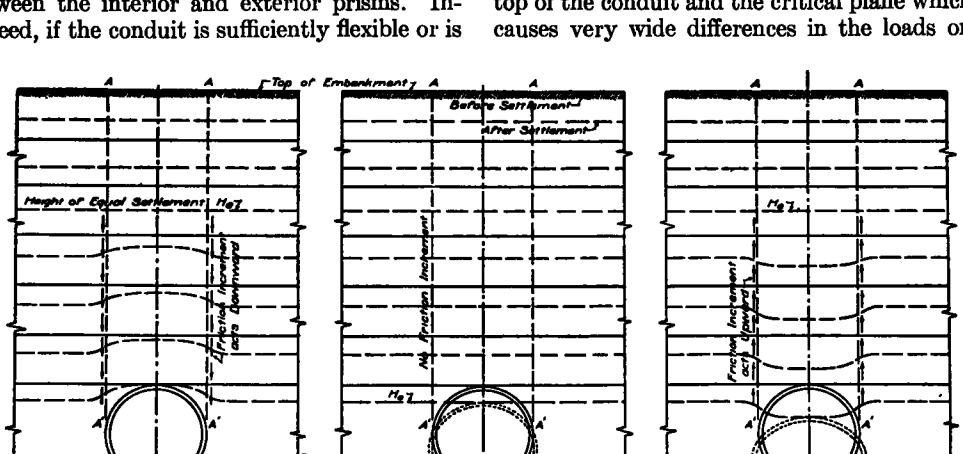

Figure 6. Typical Settlement Conditions Affecting Loads on Culverts

ment situations affecting loads on projecting conduits are illustrated in Figure 6.

ground surface and the critical plane (columns which are pB_c high).

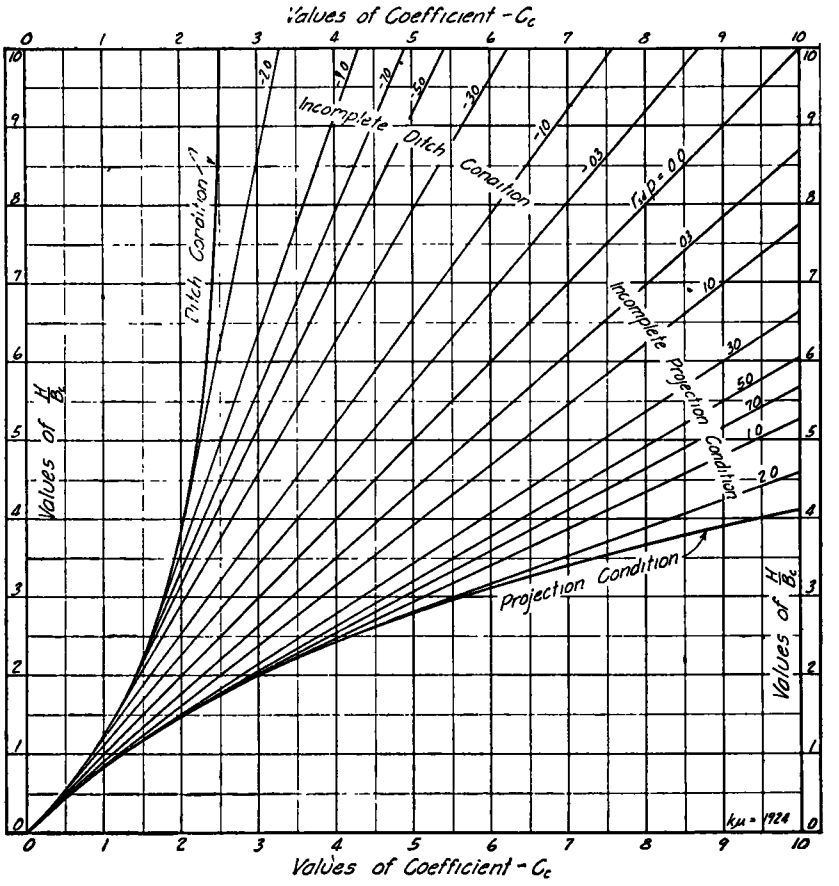

For chosen values of the "settlement" ratio and the "projection" ratio ($r_{sd}p$), and given values of $\frac{H}{B_c}$, find values of the coefficient, C_c, and substitute in the formula $W_c = C_c w B_c^2$.

Figure 7. Load Computation Diagram for Projecting Conduits

The net effect of the relative settlements of the interior and exterior prisms of soil, both as to magnitude and direction, on the vertical load produced on projecting conduits, is controlled by an abstract ratio, known as the "settlement ratio" and designated by the symbol r_{sd}. It is defined as the ratio of the difference between the settlement of the critical plane and of the top of the conduit to the compression of the columns of soil at the sides of the conduit between the natural

Marston's formula (*3*) (*4*) for vertical loads on projecting conduits due to an earth fill is

$$W_c = C_c w B_c^2 \qquad (3)$$

in which:

W_c = load per unit length of conduit,
C_c = a load coefficient,
w = unit weight of the embankment material,
B_c = outside width of the conduit,
H = height of fill.

The coefficient, C_c, in formula 3 is a function of the ratio of the height of fill to the outside width of the conduit, $\frac{H}{B_c}$; of the projection ratio, p; the settlement ratio, r_{sd}; and of the coefficient of internal friction of the fill material. However, Marston has pointed out that the variation in load on a projecting conduit is relatively small for wide variations of the coefficient of internal friction of the fill material, and it is not necessary or practicable to differentiate between various kinds of soil when computing loads on this class of conduits. Working values of the load coefficient C_c for substitution in formula 3 may be obtained readily from the diagram of Figure 7.

The settlement ratio is a perfectly rational quantity in Marston's theoretical analysis of loads on projecting conduits, and if accurate predictions of the settlement of the various elements which enter into the computation of this ratio were available, the probable load on a proposed culvert could be accurately computed. Conceivably, it might be possible in the case of a proposed culvert to compute the settlement of the necessary elements of the soil and of the conduit by modern methods in soil mechanics, but such a procedure would involve very extensive soundings, undisturbed sampling at considerable depths, laboratory testing of the soil and computations of settlements and deformations of the structure and of the soil adjacent to it. The cost of such procedure, both in time and money, would be prohibitive in relation to the total cost of the structure. It is advisable, therefore, to consider the settlement ratio as a semi-empirical factor for which numerical values useful in design can best be determined by measurement and observation of actual values of the ratio which develop in actual projecting conduit installations. The accumulation of a large body of such information will provide a sound basis for the choice of a suitable value to use in the design of an individual or a standardized class of conduits.

The Iowa Engineering Experiment Station (*16*) in cooperation with the Public Roads Administration has recently completed a field study in which the settlement ratios of 22 highway culverts were measured. This group of structures consisted of 15 concrete box culverts, 2 concrete arch culverts, 1 concrete pipe culvert and 4 corrugated metal pipe culverts. The measured settlement ratios of the 18 rigid type structures varied from 0 to +1.1. Twelve of the 18 values fell within the range +0.5 to +0.8.

The four flexible culverts studied had settlement ratios which varied from 0 to +0.8, and it was found that the value of the ratio varied directly with the passive resistance characteristics of the soil material at the sides of the pipe. As will be brought out later under the discussion of the supporting strength of flexible pipe culverts, densification of the soil at the sides of a structure of this type greatly reduces the vertical deformation of the pipe. This tends to reduce the amount of settlement of the top of the pipe in relation to the critical plane, causing an increase in the value of the settlement ratio.

As a result of these field observations and the experimental work reported in reference (*14*), the following tentative values of settlement ratio are offered for design use:

For rigid culverts on rock or unyielding soil foundation ..	$r_{sd} = +1.0$
For rigid culverts on ordinary soil foundations.	$r_{sd} = +0.5$ to $+0.8$
For rigid culverts on yielding foundations as compared to the adjacent natural ground....	$r_{sd} = 0$ to $+0.5$
For flexible culverts with poorly compacted sidefills.... .	$r_{sd} = -0.4$ to 0
For flexible culverts with well compacted sidefills.....	$r_{sd} = -0.2$ to $+0.8$

These recommendations are subject to revision from time to time as further knowledge accumulates.

Unusual installation conditions may cause exceptional values of the settlement ratio and of the load to develop. For example, a case has come to the author's attention where a highway fill was built across a salt marsh underlain with stiff clay at about 10 or 12 ft. below the surface. A concrete pipe culvert was built prior to construction of the fill. In order to reduce the expected settlement of the culvert and to increase its supporting strength, the pipes were laid in a well-designed concrete cradle, which in turn was supported on piles

driven into the clay stratum. Shortly after the fill was completed, this culvert, although constructed of excellent quality reinforced concrete pipe, completely collapsed. While no settlement data are available, it seems probable that the fill material at the sides (the "exterior prisms") settled a very large amount due to the soft spongy character of the marsh bed, while the culvert resting on piles driven to the stiff clay could not settle. Under these conditions the critical plane probably settled a great deal more than the top of the culvert, causing a very high positive value of the settlement ratio and a very high load to develop.

SPECIAL CASES

Most underground conduits which are subjected to external pressures due to earth covering will probably fall in one of the two main classifications which have been discussed. There will be numerous cases, however, in which the details of the terrain at the conduit site or the deliberate requirements of the designer will produce conditions affecting the external loads which are not in accordance with the definition of either ditch conduits or projecting conduits, but which have some of the characteristics of both of these classes. Five such cases which are worthy of mention are conduits in wide ditches, negative projecting conduits, imperfect ditch conduits, conduits on compressible beddings, and conduits under rock fills.

Conduits in Wide Ditches

The ditch conduit load formula 1 indicates that the load on this type of conduit is a function of the width of the ditch in which the conduit is laid; that is, the wider the ditch, the greater the load on a conduit laid in it. Obviously, there is a limiting width beyond which this principle does not apply, since in a ditch which is very wide relative to the conduit the sides of the ditch will be so far away from the conduit that they cannot possibly affect the load on it.

Experimental studies (*9*) of the effect of the width of ditch on the load transmitted to a rigid conduit indicate that it is safe to calculate the load by means of the ditch conduit formula for all widths of ditch below that which gives a load equal to the load indicated by the projecting conduit formula 3. In other words, as the width of ditch increases, other factors remaining constant, the load on a rigid conduit increases in accordance with the ditch-conduit load theory until it equals the load by the projecting-conduit theory, after which the load remains constant regardless of the width of ditch.

The diagram in Figure 8 shows values of the ratio of width of ditch to width of conduit, $\frac{B_d}{B_c}$, at which the loads on a rigid conduit are equal by both the ditch conduit theory and the projecting conduit theory. For values of $\frac{B_d}{B_c}$ less than those given in the diagram, the load on a rigid conduit may be determined by the ditch conduit theory. For greater values of this ratio, use the projecting conduit theory.

Negative Projecting Conduits

This term is applied to conduits which are constructed in relatively narrow ditches of such depth that the top of the conduit is below the level of the natural ground surface and is covered by a fill whose height is greater than the depth of the ditch, as illustrated in Figure 9. This special case may readily be encountered in highway or railway reconstruction work, wherein a culvert is constructed in a ditch dug through the old embankment and then covered with the new embankment whose grade is considerably above that of the old. Or it may occur when improvement of stream alignment requires the conduit to be constructed in a channel change through relatively high ground. The projection ratio in this case refers to the distance from the natural ground surface down to the top of the conduit divided by the width of the ditch.

Analysis of the loads on a rigid conduit installed under these conditions indicates that the shearing stresses on the interior prism of soil induced by the unequal settlements of the interior and exterior prisms, are upward in direction, and that there is a plane of equal settlement at some height above the surface of the ground in which the ditch is dug. As a generalization it may be said that the load on such a conduit will lie somewhere between that indicated by the ditch conduit formula 1 as a minimum, and the weight of the prism of soil of width B_d and height H as a maximum.

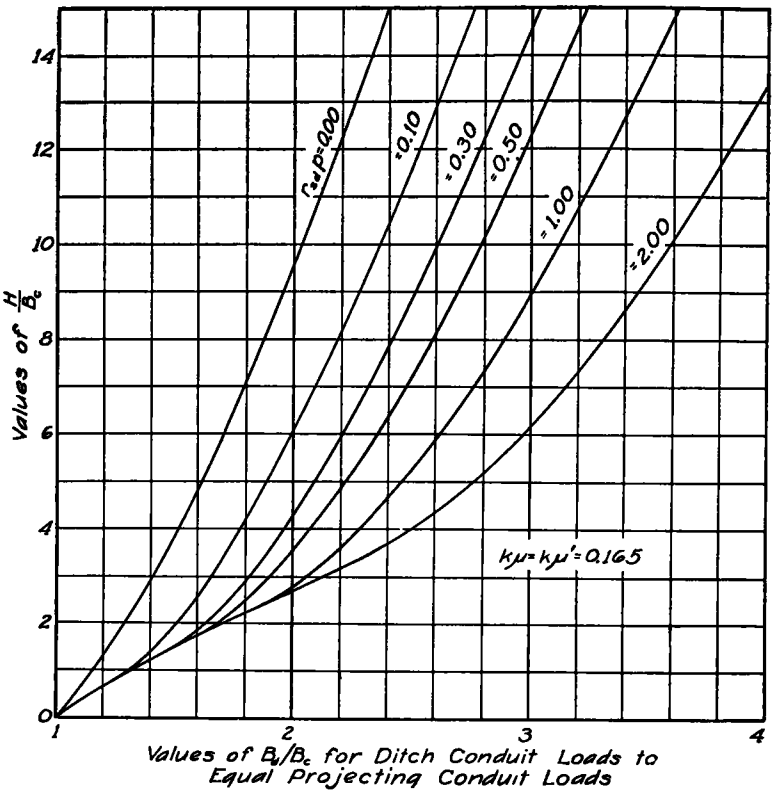

Figure 8. Curves for Determining the Transition-Width Ratio

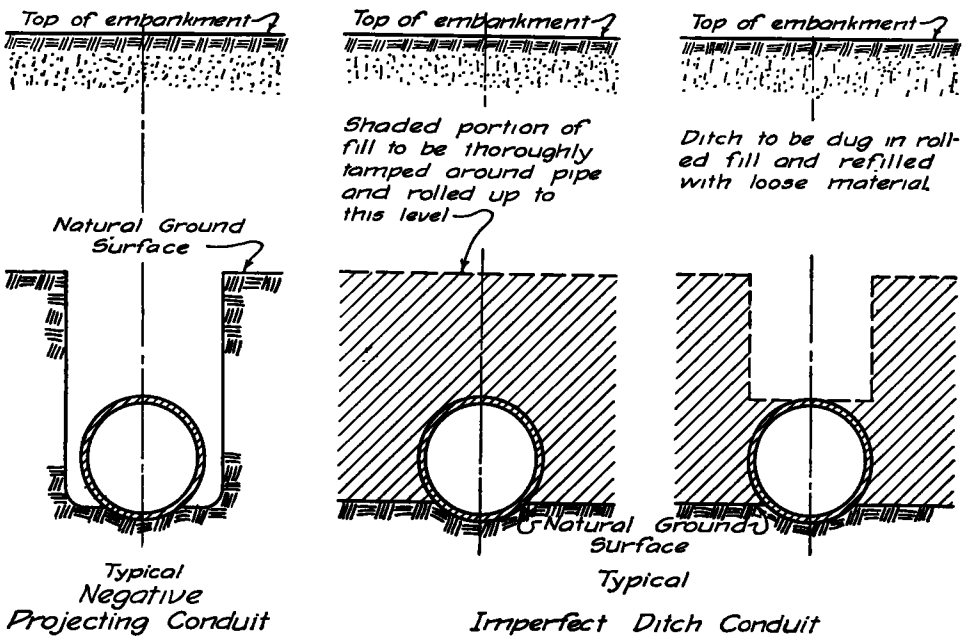

Figure 9

The greater the numerical value of the negative projection ratio, the less the load and vice versa, within the limits stated above.

Imperfect Ditch Conduits

In the early days of Dean Marston's researches on conduit loads, he was impressed by the very high loads which may develop on projecting conduits when the conditions are such that large shearing forces are additive to the weight of the prism of soil directly over the conduit, and he strove to devise a method of construction which would reduce or eliminate these shearing forces, or possibly reverse their direction so that they would act benevolently as in the case of ditch conduits. With this objective in mind, he developed the imperfect ditch method (*3*) of construction (see Fig. 9), in which the soil on both sides and above the conduit for some distance above its top is *thoroughly* compacted by rolling, tamping, or other suitable means. Then a ditch is constructed in this compacted fill by removing the prism of material directly over the conduit. This ditch is then refilled with very loose compressible material, after which the embankment is completed in a normal manner.

A reduction in the load on the structure is accomplished in this method of construction by creating a condition wherein it is certain that the prism of material directly over the conduit will settle more than the adjacent prism, and the ditch in the compacted fill material must be deep enough and the refilling material must be loose enough to insure this action. Straw, leaves, brush or other highly compressible material may be used as part of the ditch backfill to cause the interior prism to settle a large amount. It is strongly recommended that a competent inspector be provided to supervise the operations involved in the imperfect ditch method of construction.

The load analysis for this type of construction is similar to that for negative projecting conduits, except that the proper width factor to use is B_c instead of B_d.

Conduits on Compressible Beddings

Another method of constructing projecting conduits so as to insure less vertical load than that normally developed, which may have application in certain situations involving rock foundations and rock fills over the conduits making the imperfect ditch method of construction impractical, is to place the conduit on a very yielding foundation. This may be accomplished by excavating a trench in the rock foundation somewhat wider than the outside width of the conduit and refilling with loose, highly compressible soil on which the conduit is constructed.

This method accomplishes a less severe loading condition by insuring an abnormally high settlement of the top of the conduit in relation to the settlement of the critical plane in the embankment, thereby reducing the value of the settlement ratio and consequently the load on the structure. Another favorable feature of this method of construction, especially in the case of circular pipe conduits, is the opportunity afforded to obtain a wider distribution of the reaction between the pipe and its bedding, thereby increasing its load carrying capacity as will be discussed later. A disadvantage of this type of construction is that it permits the flow line of the structure to settle more than ordinarily, but this disadvantage can be neutralized to an appreciable extent by constructing the conduit on a camber.

Rock Fills

All of the experimental work upon which the development of Marston's theory of loads on culverts has been based, was carried out using ordinary fill materials such as gravel, loam, etc. No facilities were available for checking the theory in case of rock fills. However, in 1929, three 36-in. cast iron pipe culverts (*12*) were constructed under rock fills on primary roads in Iowa and advantage was taken of this opportunity to study the load effect of the rock embankments. Two of these culverts failed under the fill load, one of them crushing completely and the second one cracking badly. The third culvert carried the load successfully.

The phenomena observed in connection with these studies were all explainable in the light of Marston's theory, and the conclusion was drawn that the rock embankments acted in a manner very similar to earth embankments and that Marston's theory is, broadly speaking, applicable to this condition.

SURFACE LOADS

In addition to the external loads due to the filling material over underground conduits, they are also subjected to loads due to highway, railway or airplane traffic or other types of loads applied at the surface and transmitted

through the soil to the underground structure. Such loads are of major importance when a conduit is placed under a traffic way with a relatively shallow covering of earth.

Extensive experiments on both ditch and projecting conduits have indicated that a static concentrated surface load, such as a truck wheel, is transmitted through the soil covering to the underground structure substantially in accordance with the Boussinesq solution for stress distribution in a semi-infinite elastic solid. These experiments also indicated the magnitude of impact loads produced by moving wheel loads. From the facts revealed by these tests, Marston proposed the following formula for live loads on underground conduits.

$$W_t = \frac{1}{A} I_c C_t T \tag{4}$$

in which:

W_t = average load per unit length of conduit,
A = length of conduit section on which load is computed,
I_c = impact factor,
C_t = load coefficient,
T = a concentrated surface load.

The coefficient C_t is dependent upon the length and width of the conduit section and the depth of cover over the conduit. It is based upon the Boussinesq law of stress distribution. A method for computing C_t based upon the work of Dr. N. M. Newmark of the University of Illinois and of Dr. D. L. Holl of Iowa State College is reported upon in another paper in this volume (see page 179) (*15*).

The impact factor, I_c, is equal to unity when the surface load is static. When it is moving, as in the case of truck or airplane wheels, the value of I_c may vary widely depending upon speed of the vehicle, vibratory action, wing uplift, and most importantly, upon roughness characteristics of the roadway surface.

The experiments referred to showed that the value of the impact factor is independent of the depth of cover over a culvert and indicated design values of I_c from 1.5 to 2.0 for trucks operating on an unpaved roadway. No experimental evidence is available for paved roadway conditions, or for airplane traffic.

SUPPORTING STRENGTH OF UNDERGROUND CONDUITS

Underground conduits are constructed in a wide variety of shapes and of many different structural materials. In general, the load on a conduit is independent of its shape and the material of which it is made, except as these properties may contribute to the settlement of the top of the conduit. On the other hand the supporting strength or load carrying capacity of a conduit is intimately dependent upon its shape and the kind and quality of material of which it is made.

Monolithic Arch and Box Culverts or Sewers

These monolithic types of reinforced concrete structures may be satisfactorily designed by any of the current procedures for analysis of rigid frame structures. Numerous measurements of the distribution of the vertical load on both rectangular and circular shaped culverts due to the earth overburden have indicated that it is essentially uniformly distributed over the width of the conduit and may be so considered for design purposes. They may or may not be subjected to active lateral pressure on all or a portion of their sidewall areas, depending upon the local situation.

Some laboratory experiments (*5*) on the supporting strength of monolithic box culverts indicate that the actual supporting strength exceeds the calculated strength until the concrete of the top slab cracks, after which the actual strength very closely approximates the calculated strength.

Rigid Circular Pipes

Rigid circular pipes, usually precast of such materials as burned clay, plain or reinforced concrete, cast iron, etc., are difficult to analyze by principles of mechanics, and since they are usually relatively small structures, their supporting strength can be most easily determined by testing a representative group of specimens in the laboratory. Several methods of testing short sections of circular pipes have been devised; viz., the two-edge bearing, the three-edge bearing, the sand bearing, and the Minnesota bearing tests, the details of which are shown in Figure 10. Of these, the three-edge bearing test is the simplest and most easily performed, and at the same time it

gives accurate and uniform results. For these reasons it is widely employed in pipe strength determinations, although some engineers prefer the sand bearing test because of the wider distribution of both the applied load and reaction.

As will be noted in Figure 10 the test load and reaction on the pipe is distributed differently in each of these types of tests and the breaking load or supporting strength will likewise be different. It is convenient to express the supporting strength of a pipe in terms of its strength when tested by the three-edge bearing method, taken as unity, by means of a load factor or strength ratio which is defined as the ratio of the strength of a pipe under any stated condition of loading to its three-edge bearing test strength. Numerous tests of rigid pipes have indicated the following values of load factor or strength ratio for the other three test methods shown in Figure 10.

Sand bearing test	1.5
Two-edge bearing test	1.0
Minnesota bearing test	1.1

Likewise when a pipe is placed and loaded in a field installation, the loads and reactions will be distributed much differently than in the test loading, and in certain cases, lateral pressures will be exerted against the sides of the pipe thereby increasing its ability to support vertical loads.

A wide variety of bedding conditions affecting the load and reaction distribution and the lateral pressure situation may be encountered in culvert construction practice and a wide variety of supporting strengths of a given conduit may be obtained simply by varying the installation conditions. It is feasible to establish and define classifications of bedding conditions covering a range of practical attainments and determine a load factor for each classification which, when multiplied by the three-edge bearing laboratory strength of the pipe will give the safe supporting strength for pipes installed in accordance with the definition of that classification.

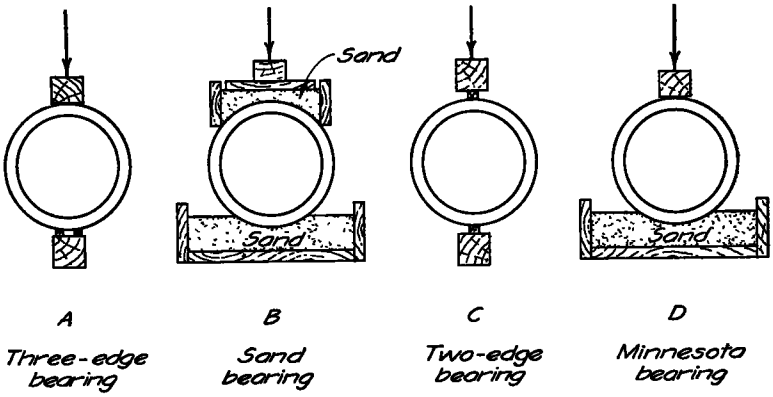

Figure 10. Four Types of Bearing for Laboratory Tests of Pipe

Ditch Conduit Beddings

For ditch conduits, the following bedding classifications have been defined (*2*) (*6*) and are illustrated in Figure 11.

1. *Impermissible Bedding* is that method of bedding ditch conduits in which little or no care is exercised to shape the foundation to fit the lower part of the conduit exterior or to refill all spaces under and around the conduit with granular materials at least partially compacted.

2. *Ordinary Bedding* is that method of bedding ditch conduits in which the conduit is bedded with "ordinary" care in an earth foundation shaped to fit the lower part of the conduit exterior with reasonable closeness for a width of at least 50 percent of the conduit breadth; and in which the remainder of the conduit is surrounded to a height of at least 0.5 ft above its top by granular materials, shovel placed and shovel tamped to completely fill all spaces under and adjacent to the conduit; all under the general direction of a competent engineer.

3. *First Class Bedding* is that method of bedding ditch conduits in which the conduit is carefully bedded on fine granular materials in an earth foundation carefully shaped to fit the lower part of the conduit exterior for a width of at least 60 percent of the conduit breath; and in which the remainder of the conduit is entirely surrounded to a height of at least 1.0 ft above its top by granular materials carefully placed by hand to completely

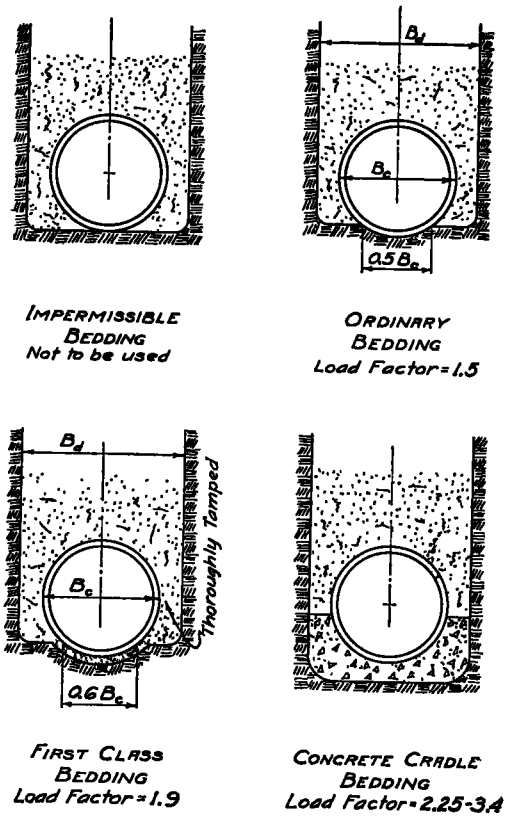

Figure 11

fill all spaces under and adjacent to the conduit, and thoroughly tamped on each side and under the conduit so far as practicable in layers not exceeding 0.5 ft thick, all under the direction of a competent engineer represented by a competent inspector constantly present during the operation.

4. *Concrete-Cradle Bedding* is that method of bedding conduits in which the lower part of the conduit exterior is bedded in plain or reinforced concrete, of suitable thickness under the lowest part of the conduit exterior and extending upward on each side of the conduit for a greater or less proportion of its height.

The load factor for each of these bedding classes has been determined experimentally to be:

Impermissible bedding.....	1.1
Ordinary bedding	1.5
First class bedding	1.9
Concrete-Cradle Bedding..	2.2 to 3.4

Projecting Conduit Beddings

In culvert construction practice, rigid pipes are very often installed as projecting conduits and the fill material may exert an active lateral pressure against those portions of the sides of the pipes which project above the natural ground surface. These lateral pressures tend to increase the supporting strength of the structure. The supporting strength of a projecting conduit is, therefore, a function of both the distribution of the vertical load and of the vertical reaction on the pipe, and of the magnitude and distribution of the active lateral pressure on those portions of its sides which are exposed to the embankment filling material.

Because of the large number of possible combinations of reaction distributions and effective lateral pressure distributions, the experimental determination of load factors for projecting conduits has been supplemented by analytical studies of the stress situation in pipe rings under various combinations of loads and lateral pressures (*13*). As a result of these studies, the following formula for load factor has been developed for cases of field loading in which the pipes normally crack at the bottom. This embraces practically all cases except when the pipe is bedded in a concrete cradle.

$$L_f = \frac{1.431}{N - xq} \tag{5}$$

in which:

L_f = the load factor,
N = a parameter which is a function of the distribution of the vertical load and vertical reaction,
x = a parameter which is a function of the area of the vertical projection of the pipe on which the active lateral pressure of the fill material acts,
q = the ratio of the *total* lateral pressure to the *total* vertical load.

When the load and reaction situation causes the pipe to crack first at the top, which is usually the case when pipes are bedded in a concrete cradle, N' and x' should be substituted for N and x in formula 5. Values of the parameters x and x' for various projection ratios are given in Table 1.

TABLE 1

Projection ratio, p	Values of x	Values of x'
0	0	0.150
0.3	0.217	0.743
0.5	0.423	0.856
0.7	0.549	0.811
0.9	0 655	0.678
1.0	0.638	0.638

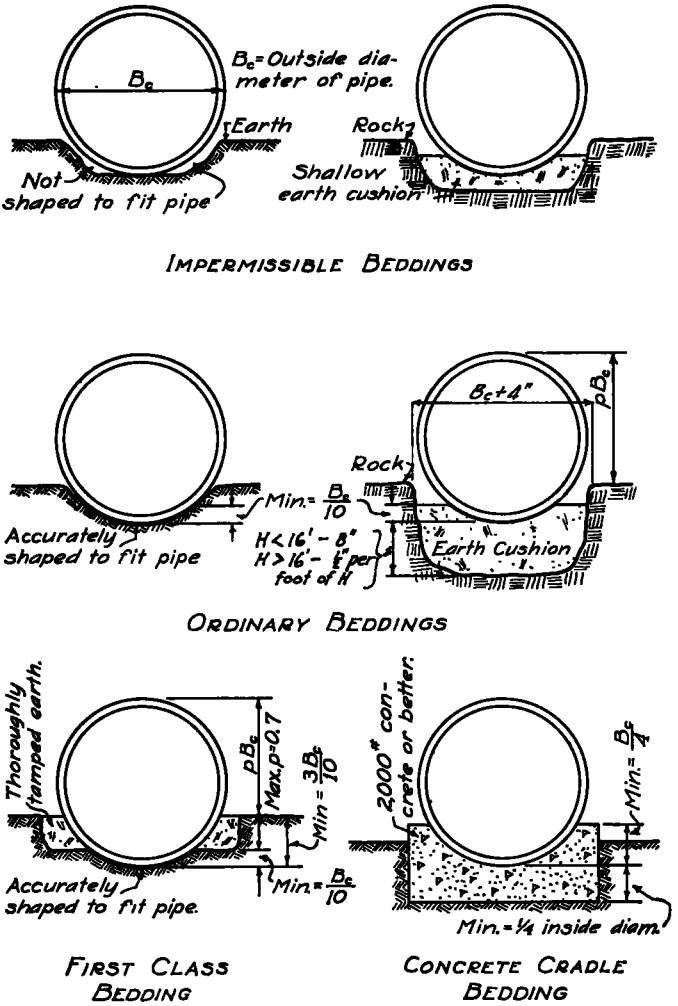

Figure 12. Types of Projection Beddings

As in the case of ditch conduits, it is convenient to name and define several classes of bedding conditions for projecting conduits and determine a value of N or N' for each class. These classes of bedding are illustrated in Figure 12 and are defined as follows (*13*):

Impermissible Projection Bedding is that method of bedding projecting conduits in which little or no care is exercised to shape the foundation surface to fit the lower part of the conduit exterior or to fill all spaces under and around the conduit with granular materials.

This type of bedding also includes the case of conduits on rock foundations in which an

earth cushion is provided under the conduit, but is so shallow that the conduit, as it settles under the influence of vertical load, approaches contact with the rock.

Ordinary Projection Bedding is that method of bedding projecting conduits under embankments in which the conduit is bedded with "ordinary" care in an earth foundation shaped to fit the lower part of the conduit exterior with reasonable closeness for at least 10 percent of its over-all height; and in which the remainder of the conduit is surrounded by granular materials, shovel placed to completely fill all spaces under and adjacent to the conduit; all under the general direction of a competent engineer.

In case of rock foundations, the pipe are bedded on an earth cushion, shaped similar to the above, having a thickness under the pipe of not less than ½ in. per foot height of fill, with a minimum allowable thickness of 8 in.

TABLE 2

Type of projection bedding	Value of N	Value of N'
Impermissible	1.310	
Ordinary	0.840	
First class	0.707	
Concrete cradle		0.505

First Class Projection Bedding is that method of bedding projecting conduits, having a projection ratio not greater than 0.70, in which the conduit is carefully bedded on fine granular materials in an earth foundation carefully shaped to fit the lower part of the conduit exterior for at least 10 percent of its over-all height; and in which earth filling material is thoroughly rammed and tamped, in layers not exceeding 6 in. in depth, around the conduit for the remainder of the lower 30 percent of its height; all under the direction of a competent engineer, represented by a competent inspector constantly present during the operation.

Concrete Cradle Projection Bedding (*7*) is that method of bedding conduits in which the lower part of the conduit exterior is bedded in a cradle, constructed of 2,000-lb concrete, or better, having a minimum thickness under the pipe of one-fourth its nominal internal diameter and extending up the sides of the pipe for a height equal to one-fourth its outside diameter.

The values of N and N' for these bedding classes are given in Table 2.

Special Cases

The proper load factor to use in determining the field supporting strength of various types of conduits needs to be given careful study in special cases of loading.

For example, analytical considerations indicate that the load factor for live loads produced by wheel loads applied at the roadway surface and for all classes of bedding is nearly a constant value, varying from about 1.5 to 1.7.

In the case of a negative projecting conduit, the structure is installed in a ditch similar to the situation typical of a ditch conduit. For cases of this kind, the load factors appropriate for ditch conduit beddings may be used.

When a conduit is installed and loaded by the imperfect ditch method of construction, the structure will be subject to active lateral pressures on its sides, much the same as a projecting conduit, and this fact needs to be taken into account in the determination of a proper load factor.

Concrete Incased Clay Pipe

Circumstances may arise under which an engineer may wish to increase the strength of clay pipes by incasing them in concrete. Some extensive experiments (*8*) in which commercial vitrified salt-glazed clay pipe were incased in plain concrete and the combined structure tested in both sand and three-edge bearings have indicated that the test strength is only slightly greater than the sum of the individual supporting strengths of the clay pipe and of the incasement. The action of the incased pipe was very nearly that of two independent but concentric rings, the supporting strength of the combined structure being very much less than if the two materials had acted as a unit in resisting the stresses due to the test load.

As a result of these experiments, computations have been made of the increase in three-edge bearing strength of A.S.T.M. standard sewer pipe when incased in concrete of various thicknesses. The results of these computations are shown in Figure 13

Factor of Safety for Rigid Pipes

The choice of a factor of safety which will insure a safe structure under all conditions of loading which can be reasonably anticipated and at the same time make possible the construction of a facility which will be within the bounds of reasonable economy always requires

the exercise of considerable judgement on the part of the designer, regardless of the type of structure under consideration. Competent men will differ in their opinions of the relative importance of various details which influence the choice of a factor of safety in connection with a particular structure or type of structure. It will be worthwhile in this discussion to set forth some of the details which are worthy of consideration when choosing a factor of safety for culvert design purposes.

As a general rule the failure of a culvert in service will not entail the injury or loss of human life, and for this reason a factor of safety need not be so large as would be required in the case of some kinds of structures where human life is likely to be involved in structural failure. This may not be true in cases where the fill over a culvert is relatively shallow, and the probability of a culvert failure causing a serious depression in the roadway or runway surface needs to be taken into consideration. Also, culvert failures are usually gradual in occurrence, and they will usually function as a conduit for some time even though the structure may show considerable distress. This fact permits replacement or repairs to be accomplished before serious property damage is caused by the failure and contributes to a relatively low required factor of safety.

The load on a culvert results from the combined action of several factors which are variable in nature, such as the unit weight of the fill material and the settlement ratio. Likewise the supporting strength of the conduit as installed depends upon some variable factors such as the class of bedding, the efficiency with which it is prepared, the lateral pressure acting upon the sides of the conduit, and the inherent strength of the conduit itself. It is reasonable when considering each of these factors separately to choose design values which will produce "safe" loads and "safe" supporting strengths. However, since the actual values of these factors may vary over some range as between one culvert and another, it is possible that the combined effect of all these safe values may produce a design which is ultra-safe and therefore not economical. Statistically, it is highly improbable that all of these variable factors will combine at their most unfavorable specific value in any one culvert. For these reasons, it is this author's opinion at this time that a factor of safety of unity may reasonably be used in computing the safe height of fill over a culvert, when the minimum test strength of the conduit is used as a basis of design and when reasonably safe values of the other variable factors are used. This opinion does not apply to cases where the height of fill over a conduit is relatively shallow and damage to vehicles and the occupants thereof might result from a culvert

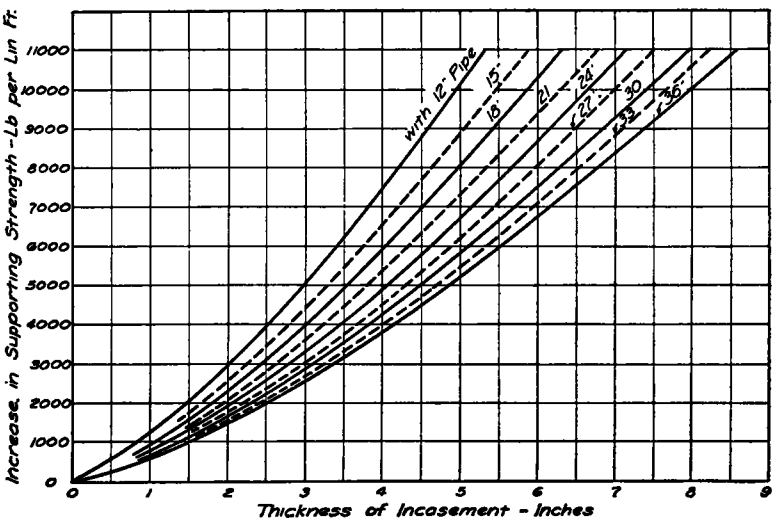

Figure 13. Increase in Supporting Strength of Clay Pipe Due to Incasement of 3,000-lb. Concrete, Tested with Three-Edge Bearings and at 70 Deg. F.

failure. It is believed that a factor of safety of unity employed under the conditions enumerated above will give an overall factor which is greater than unity in nearly all cases when the statistics of the situation are considered.

If, however, the average strength of culvert pipes as revealed by test strengths on representative samples of the pipes is used as a basis of design, a factor of safety of 1.20 to 1.25 should be allowed because of the normal variation of individual pipes relative to the average strength. This recommendation is based upon the premise that no individual pipe section in the finished structure should be overloaded.

Flexible Pipes (14)

In general it may be said that underground conduits derive their ability to support the earth above them from two sources: First, the inherent strength of the pipe to resist external pressures; and second, the lateral pressure of the soil at the sides of the pipe, which produces stresses in the pipe ring in opposite directions to those produced by the vertical loads and thereby assists the pipe in supporting the vertical loads. In rigid pipes such as those made of concrete, cast iron, burned clay, etc., the inherent strength of the pipe is the predominant source of supporting strength. The only lateral pressure that can be safely depended upon to augment the load-carrying capacity of the pipe is the active lateral pressure of the soil, since the rigid pipes deform very little under the vertical load and consequently the sides do not move outward enough to develop any appreciable passive resistance pressure in the enveloping soil.

In flexible pipes such as corrugated metal culverts, thin-walled steel conduits, etc., the situation is reversed. The pipe itself has relatively little inherent strength, and a large part of its ability to support vertical load must be derived from the passive pressures induced as the sides move outward against the soil. The ability of a flexible pipe to deform readily and thus utilize the passive soil pressure on the sides of the pipe is its principal distinguishing structural characteristic and accounts for the fact that these relatively light-weight, low-strength pipes can support earth fills of considerable height without showing evidence of structural distress. It is apparent from these considerations that any attempt to analyze the structural behavior of the flexible conduits must take into account the soil at the sides as an integral part of the structure, since such a large proportion of the total supporting strength is attributable to the side material.

Another major difference between the rigid types of conduits and the flexible types is that the latter fail by deflection rather then by rupture of the pipe walls, as do the former. A flexible pipe, installed in the ordinary manner, without vertical struts or other pre-stressing devices, will deflect under the vertical earth load, the vertical diameter becoming less and the horizontal diameter greater by appreciable amounts. The outward movement of the sides of the pipe against the enveloping fill material brings into play the passive resistance of the soil, which acts horizontally against the pipe and greatly reduces the amount that the pipe would deflect if acted upon by the vertical earth loads alone.

This action continues as the embankment is built higher until the top of the pipe becomes approximately flat, after which additional load may cause the curvature of the top portion of the pipe to reverse direction, becoming concave upward. When this occurs, the sides of the pipe will pull inward, which eliminates the side supports of the pipe, since they are passive forces that cannot follow the inward movement, and the pipe will proceed to complete collapse and failure as rapidly as the earth above can follow the downward movement of the top of the pipe and exert pressure on the structure. The whole action is one of large deflection change unaccompanied by rupture of the pipe wall, and for this reason, the design of the flexible types of conduits should be based upon deflection of the ring rather than stress in the sidewalls as in the case of the rigid types.

A number of field loading experiments on corrugated metal pipe culverts, in which the vertical and lateral pressures on the pipes and the deflection of the pipes were measured, have led to the following conclusions regarding structural characteristics of flexible conduits:

1. The vertical load may be determined by Marston's theory of loads on conduits and is distributed approximately uniformly over the breath of the pipe.

2. The vertical reaction is equal to the vertical load and is distributed approximately

uniformly over the width of bedding of the pipe.

3. The horizontal pressure on each side of the pipe is distributed parabolically over the middle 100 deg of the pipe and the maximum unit pressure which occurs at the ends of the horizontal diameter of the pipe, is equal to the modulus of passive resistance of the fill material multiplied by one half the horizontal deflection of the pipe.

This assumed loading is shown graphically in Figure 14. The deflection of a flexible culvert pipe resulting from the load system described above is very often augmented by the fact that the soil at the sides of the pipes may continue to yield in response to the horizontal pressures over a considerable period of time after the maximum vertical load has developed. This results in a continuation of the pipe deformation to a value beyond that which is primarily attributable to the vertical load on the pipe. Therefore, when it is desired to estimate the maximum ultimate deflection of a flexible pipe culvert, it may be necessary to introduce a quantity which has been called the Deflection Lag Factor. The deflection lag factor cannot be less than unity and has been observed to range upward toward a value of 2.0. A normal range of values from 1.25 to 1.50 is suggested for design purposes.

Analysis of an elastic ring in accordance with the above considerations leads to the formula

$$\Delta x = D_l \frac{KW_c r^3}{EI + 0.061\, er^4} \qquad (6)$$

in which:

Δx = Horizontal deflection of the pipe, in. (may be considered the same as the vertical deflection),
D_l = deflection of lag factor
K = a bedding constant, depending upon the bedding angle,
W_c = vertical load per unit length of the pipe, lb per in.,
r = mean radius of the pipe, in.,
E = modulus of elasticity of the pipe material,
I = moment of inertia per unit length of cross section of pipe wall, in.^{4} per in.,
e = modulus of passive resistance of the enveloping soil, lb per sq in. per in.

Values of the bedding constant, K, for various values of the bedding angle are shown in Table 3. The bedding angle is defined as one-half the angle subtended by the arc of the pipe ring which is in contact with the pipe bedding.

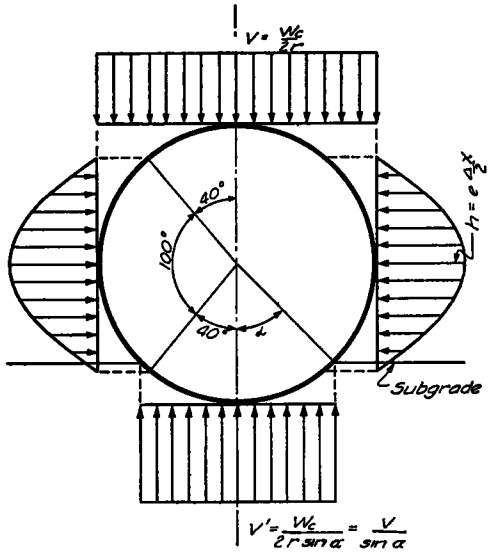

Figure 14. Assumed Distribution of Pressure on Flexible Culvert Pipes

TABLE 3

Bedding angle	Bedding constant, K
deg.	
0	0.110
15	.108
22½	.105
30	.102
45	.096
60	.090
90	.083

The stiffness factor EI in formula 6 may be evaluated by tests of the pipe metal to determine its modulus of elasticity and by calculating the moment of inertia of the shape of the cross section of the pipe wall. In many cases, however, it will be easier to subject a representative section of the pipe to a laboratory three-edge bearing test to determine the load-diameter change relationship of the pipe. The measured loads and deflections may be substituted in the following formulas to obtain effective values of the product EI.

$$EI = 0.149 \frac{Wr^3}{\Delta y} \tag{7}$$

$$EI = 0.136 \frac{Wr^3}{\Delta x} \tag{8}$$

in which:

Δy and Δx are the vertical and horizontal deflections of the pipe ring, respectively,
W = the three-edge bearing test load, lb per in.,
r, E, and I are as defined previously.

Computed values of I, the moment of inertia of the pipe wall per lineal inch, for pipes having standard corrugations ($2\frac{2}{3}$-in. pitch by $\frac{1}{2}$-in. depth) and various thicknesses of metal are given in Table 4. Values of EI for metal having a modulus of elasticity of 29,000,000 psi are also given in this table.

TABLE 4
MOMENTS OF INERTIA AND VALUES OF EI PER INCH LENGTH OF PIPE WITH STANDARD CORRUGATIONS ($2\frac{2}{3}$-IN. PITCH BY $\frac{1}{2}$-IN. DEPTH)

U. S. gage No.	Moment of Inertia, in.^{4} per in.	Stiffness factor EI (E = 29,000,000)
4	0.008275	239,975
6	0 006744	195,576
8	0.005512	159,848
10	0.004373	126,817
12	0.003317	96,193
14	0.002326	67,454
16	0.001848	53,592
20	0.001104	32,016
24	0.000733	21,257
30	0.000366	10,614

Modulus of Passive Resistance

The modulus of passive resistance of the side filling material is defined as the unit pressure developed as the side of a pipe moves outward a unit distance against the side fill. Little is known concerning the nature of this modulus. In the Rankine theory of lateral soil pressures, the limiting value of the ratio of passive horizontal pressure to vertical pressure which a granular soil without cohesion can develop is shown to be the reciprocal of the active pressure ratio. However, this theory does not give a clue as to the amount of movement required to develop the limiting value of passive pressure, and it would seem that the actual passive pressure may be any value less than the maximum, depending upon soil characteristics and amount of movement of the sides of the pipe.

Several facts concerning the value of the modulus of passive resistance of side fills adjacent to experimental flexible culvert pipes have been observed. First, this modulus varies widely with soil characteristics. Measurements have indicated a value for a gravel material approximately three times as great as for a loam material. Also in the case of a silty clay soil material, the modulus of passive resistance was approximately doubled by hand tamping as compared to the value for the same material in a relatively loose, shovel-placed condition. In the recently completed field studies of settlement ratio values (*16*), the values of the modulus of passive resistance in the case of five corrugated metal pipe culverts were estimated to vary between a low of 4 to 8 psi per in. to a high of 51 psi per in. The highest value prevailed in the case of a 36-in. culvert whose sidefills consisted of heavy plastic clay compacted with pneumatic hand tampers. The lowest values occurred in the case of a 60-in. culvert whose sidefills were described as yellow sandy clay mixed with top soil and hand tamped to the top of the pipe. The second fact which has been observed is that when a flexible pipe is installed without struts the horizontal movement of the sides of the pipe and the passive resistance pressure at the sides of the pipe increase in a linear relationship with the height of fill indicating a constant value of the modulus of passive resistance pressure as the height of fill is built up.

All observations which have been made concerning this property of the sidefills adjacent to flexible pipe culverts indicate the qualitative value of densifying the sidefills to reduce the deflection which such culverts will experience. It is strongly recommended that every effort be made to secure the densest possible side fills within a width on each side of the pipe equal to the diameter of the pipe itself.

No experiments or detailed observations have been made on strutted flexible pipes, and there is urgent need for some extensive research to determine both the qualitative and quantitative nature of the modulus of passive resistance under these conditions. When struts are used to prestress the pipe, that is, to hold it out of round while the fill is being built, an analysis of the deflections of the pipe after the struts are removed would need to be divided into two phases; viz., the deformation of the pipe prior to reaching its initial circular

shape, and the deformation of the pipe after this initial shape has been attained. In the first phase of the action, the forces tending to deform the pipe will be the vertical load and reaction plus the energy stored in the pipe by the pre-stressing operations, and the forces tending to resist the deformation will be the passive resistance pressures on the sides of the pipe. In the second phase, the vertical load and reaction will produce deformation, while the resisting forces will be the inherent resistance of the pipe plus the side forces.

Allowable Deflections

For many years the manufacturers of corrugated metal pipe culverts have recommended that the deflection of such pipes in service should not exceed about 5 percent of the nominal diameter of the pipe. Nothing has occurred in connection with the researches on flexible culverts conducted by the Iowa Station to indicate that this is not a reasonable limit of deflection, and its continued use is recommended. However, this should be considered to be the ultimate limit of deflection after a long period of time and not the limit to be reached immediately upon completion of the fill or shortly thereafter.

Examples of Culvert Design

Example I.

Determine the safe height of fill which can be constructed over a 48-in. concrete pipe culvert (4.83 ft. outside diameter) having a minimum 3-edge bearing test strength of 2180 D lb. per lin. ft. The terrain at the culvert site indicates that the top of pipe will project above the adjacent natural ground approximately 2 ft., and the soil conditions indicate that a maximum settlement ratio of +0.7 may develop. The pipes will be constructed on ordinary bedding. Assume the unit weight of embankment material to be 120 lb. per cu. ft.

Data:

$B_c = 4.83$ $\qquad r_{sd} = +0.7$

$pB_c = 2.0$ $\qquad r_{sd}\,p = +0.29$

$p = \frac{2}{4.83} = 0.41$ $\qquad w = 120$ lb. per cu. ft.

Three-edge bearing strength = 2180 × 4 = 8720 lb. per lin. ft.

Solution:

In order to determine a load factor it will be necessary to assume a preliminary height of fill. Try $H = 20$ ft.

Then the lateral pressure acting on the sides of the pipe projecting above the natural ground line (using lateral pressure ratio, $k = 1/3$) $= (H + \frac{pB_c}{2}\, wkpB_c) = 21 \times 120 \times 1/3 \times 2 = 1680$ lb. per lin. ft.

Vertical load on pipe under a 20-ft. fill. $\frac{H}{B_c} = 4.14$.

From Figure 5, $C_c = 6.00$.

Trial load, (formula 3) $W_c = 6 \times 120 \times 4.83^2 = 16800$ lb. per lin. ft.

Ratio of lateral pressure to vertical load, $q = \frac{1680}{16800} = 0.1$

Load factor (formula 5 and Tables 1 and 2)

$$L_f = \frac{1.431}{.840 - .32 \times .1} = 1.77$$

Field supporting strength of pipe = 1.77 × 8720 = 15400 lb. per lin. ft.

Substituting this field supporting strenght in formula 3

$$15400 = C_c \times 120 \times 4.83^2$$

$$C_c = 5.5$$

From Figure 5, the value of $\frac{H}{B_c}$ for C_c = 5.5 is 3.8

Therefore the safe height of fill is 3.8 × 4.83 = 18.4 ft.

A check on the load factor. using $H = 18.4$ ft. instead of $H = 20$ ft. indicates that the preliminary assumption was close enough, and no change in the value of the load factor is necessary.

Similar computations for this same pipe laid in First Class Bedding and Concrete Cradle Bedding indicate safe heights of fill of 22 ft. and 31 ft. respectively, for these higher types of beddings.

If the fill over this conduit were constructed by the imperfect ditch method, in all probability the pipes would support much higher fills with safety.

Example II.

Determine the deflection of a 36-in., 12-gage corrugated metal pipe under a 12 ft. fill, assuming the following data.

Unit weight of fill, w = 120 lb. per cu. ft.
projection ratio, $p = 0.5$
bedding angle, α = 45 deg. (90 deg. contact with bedding).
modulus of passive resistance of sidefills, e = 20 psi per in.
settlement ratio, r_{sd} = +0.2
deflection lag factor, D_l = 1.25

Solution:

Calculate the vertical load on the pipe by formula 3.

$$\frac{H}{B_c} = \frac{12}{3} = 4.0$$

$r_{sd}p = +0.2 \times 0.5 = 0.1$

From Figure 5, $C_c = 5.1$

$W_c = 5.1 \times 120 \times 3^{-2} = 5{,}500$ lb. per lin. ft. = 459 lb. per lin. in.

From Table 4, $EI = 96{,}193$

From Table 3, the bedding constant, K = 0.096

Then using formula 6

$$\Delta x = 1.25 \frac{.096 \times 459 \times 18^3}{96{,}193 + 0.061 \times 20 \times 18^4} = 1.43 \text{ in.}$$

This is the computed increase in the horizontal diameter. The decrease in vertical diameter will be essentially the same.

LITERATURE CITED

*1. Marston, Anson and A. O. Anderson, "The Theory of Loads on Pipes in Ditches and Tests of Cement and Clay Drain Tile and Sewer Pipe," Bul. 31, Iowa Engineering Experiment Station, 1913.

*2. Marston, Anson, W. J. Schlick and H. F. Clemmer, "The Supporting Strength of Sewer Pipe in Ditches and Methods of Testing Sewer Pipe in Laboratories to Determine their Ordinary Supporting Strength," Bul. 47, Iowa Engineering Experiment Station, 1917.

*3. Marston, Anson, Second Progress Report to the Joint Concrete Culvert Pipe Committee, April 7, 1922 (mimeograph).

*4. Marston, Anson, "The Theory of External Loads on Closed Conduits in the Light of the Latest Experiments," Bul. 96, Iowa Engineering Experiment Station, 1930.

5. Pagels, George C., "The Supporting Strength of Reinforced Concrete Box Culverts," Unpublished Thesis, Library, Iowa State College, 1935.

*6. Schlick, W. J., "Supporting Strength of Drain Tile and Sewer Pipe Under Different Pipe Laying Conditions," Bul. 57, Iowa Engineering Experiment Station, 1920.

*7. Schlick, W. J. and J. W. Johnson, "Concrete Cradles for Large Pipe Conduits," Bul. 80, Iowa Engineering Experiment Station, 1926.

*8. Schlick, W. J., "Supporting Strength of Concrete-incased Clay Pipe," Bul. 93, Iowa Engineering Experiment Station, 1929.

*9. Schlick, W. J., "Loads on Pipe in Wide Ditches," Bul. 108, Iowa Engineering Experiment Station, 1932.

*10. Spangler, M. G., Clyde Mason and Robley Winfrey, "Experimental Determination of Static and Impact Loads Transmitted to Culverts," Bul. 79, Iowa Engineering Experiment Station, 1926.

11. Spangler, M. G., Unpublished Data.

*12. Spangler, M. G., "Investigation of Loads on Three Cast Iron Pipe Culverts under Rock Fills," Bul. 104, Iowa Engineering Experiment Station, 1931.

*13. Spangler, M. G., "The Supporting Strength of Rigid Pipe Culverts," Bul. 112, Iowa Engineering Experiment Sattion, 1933.

14. Spangler, M. G., "The Structural Design of Flexible Pipe Culverts," Bul. 153, Iowa Engineering Experiment Station, 1941.

15. Spangler, M. G. and Richard L. Hennessy, "A Method of Computing Live Loads Transmitted to Underground Conduits," *Proceedings*, Highway Research Board, Vol. 26 (this volume) p. 179 (1946).

16. Spangler, M. G., Field Measurements of the Settlement Ratios of Various Highway Culverts. Unpublished bulletin manuscript, Iowa Engineering Experiment Station, 1946.

* Publications of the Iowa Engineering Experiment Station out of print.

DISCUSSION

MR. E. S. BARBER, *Public Roads Administration*: In deriving formula 6, the deflection is based on the moments produced by non-uniform load distribution and assumes that a pressure uniformly distributed around the periphery causes no deflection. However, thin walled tubes may buckle even under a uniform pressure as given by the following formula[1] for a long cylindrical tube using a Poisson's ratio of 0.3:

$$p = \frac{3.3\,EI}{r^3}$$

where p is the critical pressure and the other symbols are as previously defined.

For illustration, consider example II with the same assumptions except that $r = 36$ in. instead of 18 in. Then $W_c = 2 \times 459 = 918$ lb. per lin. in. and $\Delta x = 2.4$ in. or 3.3 percent of the diameter, which is below the 5 percent allowed. However, this gives a vertical pressure of $\frac{918}{17} = 12.8$ psi and the maximum lateral pressure is $\frac{2.4}{2}\,20 = 24$ psi, whereas the critical pressure is only $p = \frac{3.3 \times 96{,}193}{36^3} = 6.8$ psi

Thus, while formula 6 has been correlated with the performance of some culverts, it may not apply to thin pipes of large diameter because the possibility of buckling is not considered in its derivation.

PROFESSOR SPANGLER, *closure*: The formula for critical pressure to cause buckling of a tube acted upon by uniform external pressure is not applicable to the problem of the deflection of a flexible culvert pipe under an earth fill because of the different nature of the pressures involved in the two situations. In the derivation of the formula for critical pressure quoted by Mr. Barber, it is assumed that the external pressure is an active pressure which is hydraulic or pneumatic in character; that is, it remains uniform in intensity all around the outer surface of the tube regardless of the deformation of the tube. Thus, at incipient buckling or after a small amount of buckling has taken place, the external pressure remains uniformly distributed and the only thing which can prevent further development of buckling action is the inherent strength characteristics of the tube itself.

In contrast, when a flexible pipe is loaded by an earth embankment, only the vertical load caused by the embankment and the vertical reaction are active pressures. Relatively low values of these pressures cause the pipe to deform out of round because they are not uniformly distributed around the periphery of the pipe. Deformation of the pipe brings into play certain passive pressures at the sides of the pipe which reduce the amount of deformation which would occur if these lateral pressures did not develop. The lateral pressures do not prevent all deformation, and at no time during the development of loads on a flexible pipe culvert is the condition of uniform distribution of pressure around a circular ring fulfilled, as is postulated in the derivation of the critical buckling pressure formula.

The load-deformation history of a flexible pipe culvert may be described as follows. Early increments of vertical load cause the pipe to deform, the vertical diameter decreasing and the horizontal diameter increasing. The increase in horizontal diameter is accompanied by an outward movement of the sides of the pipe against the enveloping soil which causes passive horizontal pressures to be mobilized. These passive pressures build up to a value sufficient to establish equilibrium between the vertical pressures, the horizontal pressures and the inherent strength characteristics of the pipe. Additional increments of vertical load cause further deformation and a further increase in horizontal pressure to the amount necessary to establish equilibrium, and so on. Thus for each increment of active vertical pressure, an increment of passive horizontal pressure sufficient to establish equilibrium is mobilized, and buckling of the tube is prevented.

In the thin tube problem cited by Mr. Barber, there are no counteracting passive pressures available to inhibit deformation, and buckling, once it starts, proceeds rapidly in response to a very small increase in the external pressure.

There are many large diameter flexible pipe culverts in existence today which are prob-

[1] "Formulas for Stress and Strain" by R. J. Roark, McGraw-Hill Book Co. 1943, p. 306.

ably withstanding pressures considerably in excess of the critical pressure indicated by the formula quoted by Mr. Barber. For example, consider the pipe culvert installed to replace the Coal Creek Viaduct on the Denver and Salt Lake Railway which was described in *Engineering News-Record*, 125: 632–633, for November 7, 1940. This culvert is 180 in. in diameter and the moment of inertia of the pipe wall is 0.08 in^4 per in., giving an equivalent diameter/thickness ratio of about 183, which is well within the realm of thin tubes. According to the critical pressure formula

$$p = \frac{3.3 \times 29{,}000{,}000 \times .08}{\overline{90}^3} = 10.5 \text{ psi}$$

The dead weight pressure of the 42-ft. high embankment above the top of the culvert is in the neighborhood of 35 psi, and it is probable that the vertical pressure on the pipe is not much different from this weight. Also, since the soil at the sides of the pipe was compacted during construction is is reasonable to conclude that the maximum unit passive pressures at the horizontal axis of the pipe are equal to or greater than the vertical pressure. It seems reasonably certain, therefore, that this culvert is successfully carrying maximum unit pressures three to four times greater than the critical buckling pressure.

In view of the foregoing considerations, Mr. Barber's suggestion as to the applicability of the critical buckling pressure formula to flexible pipe culverts does not appear to be tenable.

ON THE HYDROLOGY OF CULVERTS

By D. B. Krimgold
U. S. Soil Conservation Service

SYNOPSIS

Since the hydrologic problems in planning highway drainage are similar to those encountered in many phases of soil and water conservation, highway engineers may be interested in the experience of conservationists. When the large scale program of soil and water conservation began in 1933, an attempt was made to use Ramser's curves, developed by the rational method with coefficients and times of concentration, based largely on measurements made in 1918 on six small watersheds in Tennessee. These curves were gradually supplanted by direct application of the rational method to individual cases. The need for additional information led to the establishment by the Soil Conservation Service of runoff studies at some 22 locations. It was expected that these studies and the experimental watersheds of the Service would furnish coefficients of runoff and times of concentration for a wide variety of conditions.

Analysis of rainfall intensities and rates of runoff obtained from these studies over several years not only did not produce the expected values, but gave support to those who doubted the validity of the rational method and of the rainfall runoff relationship. It was found that watershed characteristics and conditions of soils and of vegetal cover at the time of the storm are as important, if not more so, than rainfall amounts and intensities.

Clearer understanding of the problem and information on soils, physiography and land use made possible delineation of areas in which results from the runoff studies are applicable. Through probability analysis of the runoff records, design curves were developed for several areas of application. Samples of such curves show variation of peak rates of runoff with soils, vegetal cover, as well as rainfall intensities and other climatic factors in various geographic locations. The shapes of the several curves express the relation of peak rates of runoff to size of drainage area in various physiographic provinces. Some of the curves have already been published. Reports containing others are in various stages of completion. All are subject to revision in the light of longer records and records