SHEARING STRESSES IN SUPPORTED AND UNSUPPORTED VERTICAL SLOPES

D. P. KRYNINE, *University of California*

SYNOPSIS

In a semi-infinite earth mass the basic conditions of equilibrium are satisfied. If, however, the mass is cut by a vertical plane forming a bank, unbalanced horizontal pressures and unbalanced moments appear. The former are taken care of by horizontal shearing stresses, whereas vertical shearing stresses create couples causing overloading of the mass next to the slope and relief in weight of the rest of the mass. The moment thus created is balanced by that produced by the lateral pressure. In its turn, the couple formed by the overloading and relieving forces is balanced by a couple causing tension and fissuring in the upper part of the mass and additional compression at its lower part. The value of the lateral pressure is zero at the vertical slope and gradually increases in the direction away from the slope; and it is believed that the pressure on a translating retaining wall should decrease during the process of translation. The stress distribution at the foot of the slope is a complicated one; and in this connection special attention should be paid to a proper interpretation of test results on slope models.

This paper is partly based on that submitted by the writer to the Second International Conference on Soil Mechanics and Foundation Engineering (Rotterdam, Holland, 1948), accepted by the Conference (serial number I e 22), but not printed in the six original volumes of the Conference, due to a late arrival.

In an undisturbed semi-infinite homogeneous and isotropic mass loaded by its weight only, the principal stresses are vertical and horizontal; and there are neither vertical nor horizontal shears. If, however, the mass is cut by a vertical plane and either left unsupported or supported by a translating retaining wall, systems of horizontal shears are set up to balance the horizontal pressure within the mass. Theoretically the presence of a vertical slope causes a change in stress values throughout the mass. Practically these change values are negligible beyond a short distance from the slope, as is the general case of any disturbance (such as a tunnel, for instance). This horizontal distance is estimated in this paper to be equal to approximately the height of the slope (distance AC, Figures 1, 2 and 3).

The lateral pressure in the semi-infinite earth mass is assumed to be triangular (as shown on the right side of Figures 1, 2, and 3). The vertical pressure at a point of an undisturbed semi-infinite mass z units deep is γz, where γ is the unit weight of the earth material. This statement, as shown hereafter, is not true in the neighborhood of the vertical slope. The unit lateral pressure in an undisturbed earth mass is $K\gamma z$. Here K is the coefficient of pressure at rest of the given earth material in an undisturbed semi-infinite mass. The value of K for clays may be estimated at 0.5 or more. It is not known whether the lateral pressure diagram in the neighborhood of the vertical slope is triangular or not. If it is, it should be admitted that the value of K in the proximity of the vertical slope is variable, decreasing toward the slope (Fig. 4).

It should be recalled that: (a) vertical and horizontal shears at a point of a mass in a two-dimensional problem (as that of a vertical slope) are equal, and (b) that shearing stresses are not able to create any additional pressure at a point of the mass but merely transfer pressures, thus relieving one section (zone) of the mass and overloading some other section (zone) of the same mass.

MOMENTS

Consider equilibrium of the prism ACED of the mass, bounded by the vertical planes AD and CE, and the horizontal plane DE (Fig. 1). The prism under consideration is acted upon by the lateral pressure, the resultant of which

per unit length measured normally to the plane of drawing is F:

$$F = \frac{1}{2} K\gamma z^2 \tag{1}$$

where γ is the unit weight of the earth material. The lateral pressure F is balanced by

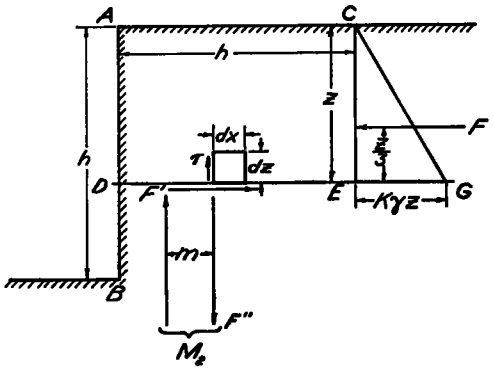

Figure 1. Forces Acting at the End of an Earth Mass Limited by a Vertical Slope

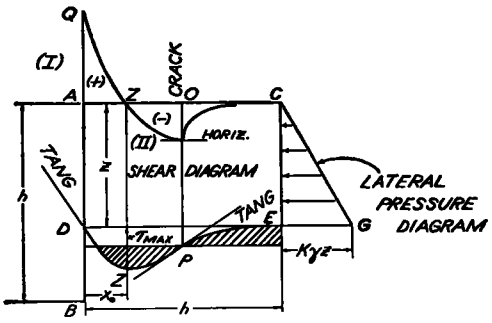

Figure 2. Horizontal Shears and Transfer of Weight

the reaction F' acting along plane DE in the direction away from slope AB. More specifically, this reaction is produced by a set of horizontal shearing stresses acting along plane DE. The moment of the couple formed by the lateral pressure F and the corresponding reaction is

$$M_1 = F \cdot \frac{z}{3} = \left[\frac{1}{2} K\gamma z^2\right]\left[\frac{z}{3}\right] = \frac{1}{6} K\gamma z^3 \tag{2}$$

This moment acts counterclockwise, and to balance it a clockwise acting moment is needed. The weight of prism ACED is balanced by the vertical reaction of plane DE and cannot produce any moment unless a part of it is transferred from one section (zone) of that prism to the other. Due to the action of vertical shears that develop in conjunction with the action of horizontal shears acting along plane DE (Fig. 2), a clock-

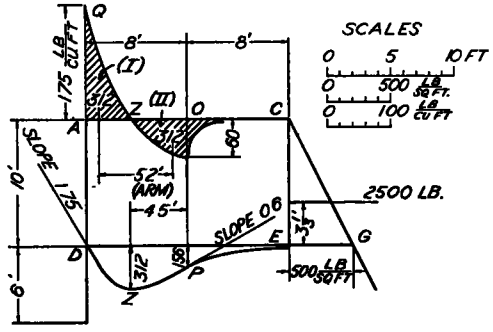

Figure 3. Numerical Example

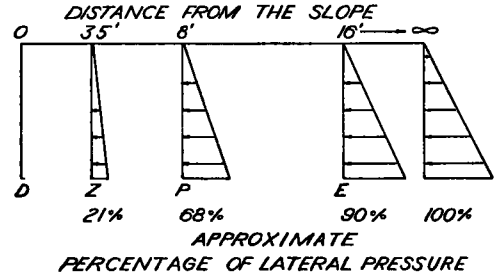

Figure 4. Decrease of Lateral Pressure

wise moment M_2 is created (shown schematically in Figure 1):

$$M_2 = F''m \tag{3}$$

To satisfy conditions of equilibrium both moments M_1 and M_2 must be numerically equal, provided that shears and tensile stresses outside prism ACED are negligible. The moments M_1 and M_2 as shown in Figure 1 act on prism ACED considered as a free body. In the interior of that prism the moment corresponding to moment M_2 acts counterclockwise and to satisfy conditions of equilibrium another moment of the same numerical value, but acting clockwise is required. Such a moment is furnished by a couple causing tension at the upper part of the mass and additional compression below some neutral axis separating tension and compression.

Hence the phenomenon of fissuring of a vertical bank is directly controlled by the value of the lateral pressure existing in the mass. In the case of metals or timber the lateral pressure, if any, is negligible, and vertical slopes of considerable height would be safe in such materials.

Reverting to Figure 1, a square shown on plane DE represents a point and the direction of τ, the horizontal and hence vertical shear stress at that point. (τ is shown at the left vertical face of the square.) The value of the shearing stress at an infinitely close point (right side of the square is $\tau + \frac{\partial \tau}{\partial x}.dx$). For the sake of brevity, symbol τ' will be used hereafter to designate the value of the derivative $\frac{\partial \tau}{\partial x}$. These two shears act on both vertical and horizontal faces of the square in Figure 1. The difference of forces acting along the vertical faces of that square is $\tau'.dx.dz$ and according to the sign of the derivative τ' this may be either overloading or relief of the unit weight of the square (Fig. 1). In reality, this square is a parallelepiped, the volume of which is $dx.dz$.one. The physical dimension of the derivative is stress over length or force over [length]^3. In other words, the physical dimension of the derivative τ' is the same as that of γ (unit weight). Thus the weight of the parallelepiped in question is $\gamma.dx.dz$ and $(\gamma \pm \tau')\ dx.dz$ before and after construction of the slope, respectively. In its turn the derivative τ' is positive when the shearing stress increases simultaneously with the increase of the abscissa x, measured in the direction from the vertical slope. For instance, in a shearing stress diagram as shown in Figure 2, the derivative τ' at point D is positive. The derivative τ' at point P where the shearing stress decreases, whereas the abscissa x increases, is negative; and at the point Z where the derivative in question is zero, the shearing stress τ is at a maximum.

In drawing the curve DZPE (Fig. 2) it has been assumed that the length of the diagram is h (height of the slope); hence the average shear stress between points D and E is

$$\tau_{ave} = \frac{F}{h} = \frac{1}{2} K\gamma \cdot \frac{z^2}{h} \tag{4}$$

The maximum shear stress as usually assumed in similar cases, may be estimated at twice the average shear:

$$\tau_{max} = 2\,\tau_{ave} \tag{5}$$

In reality curve PE touches plane DE at infinity, and not at point E. In other words, a part of the shearing diagram lies beyond point E. As to the value of the tangent to the shear diagram at point D (Fig. 2) it may be argued that the value of the shear at point D should equal the shearing resistance to start motion along plane DE:

$$\frac{\partial \tau}{\partial x} \cdot dx = c$$

assuming that the mass is cohesive, (cohesion c) its angle of internal friction ϕ being close to zero. This consideration was not given further attention in this paper, however.

GRAPHICAL DIFFERENTIATION OF THE SHEAR DIAGRAM

The value of the derivative τ' is proportional to the value of tan α, where α is the angle made by the tangent to the shear diagram at a given point with the horizon. In addition that value is proportional to the ratio of the vertical and horizontal scales used in tracing the shear diagram, Figure 2. In other words,

$$\tau' = \left[\frac{a}{b} \cdot \tan \alpha\right] \frac{\text{ton}}{\text{ft}^3} \tag{6}$$

In equation (6) the symbols a and b mean that in the shear diagram (Fig. 2) a unit of length (for instance 1 in.), represents a tons per sq. ft. vertically and b ft. horizontally. The values of the derivative τ' thus computed are plotted as vertical ordinates at the top boundary of the mass (line AQ in Figure 2) using a certain vertical scale, for instance 1 in. represents c tons per cu. ft. To measure the areas thus obtained, one above line AC marked (+), and the other below line AM marked (−), it is necessary to multiply the number of square inches in each of these areas by the product bc.

If the ordinates of areas I and II (Fig. 2) are properly plotted, both areas must be equal. Moreover, if properly measured, each of them numerically equals τ_{max}, this symbol standing for the value of the maximum ordinate in the shear diagram, Figure 2. The tangent to the curve bounding areas I and II at the

point corresponding to the eventual crack O, (Fig. 2) is horizontal since at the point of inflection $\frac{\partial^2 x}{\partial x^2} = 0$.

FISSURING OF THE BANK

The values of the slopes of the tangents to the shear diagram at the elevation of plane DE are apparent changes in unit weight of earth material along plane DE. The absolute value of the vertical ordinate at point D of area I (Fig. 2) should be added to the unit weight of earth material at the vertical slope at that elevation. In other words, the earth material at point D at the elevation of the plane DE behaves as if it weighed $\gamma + \tau'$ and not γ, the value of τ' being measured at point D. Accordingly, at point P at the same elevation the "apparent" weight of the earth material equals $\gamma - \tau'$, where τ' is the absolute value of τ' is measured at that point. If the elevation of plane DE is such that at point P

$$\tau' = \gamma \tag{7}$$

the earth material loses its weight completely at that point and at that elevation.

If the shear diagrams at all elevations of the mass have the maximum point Z and the point of inflection P at two vertical planes common to all elevations, the vertical plane passing through the inflection point P would be the weakest vertical plane of the mass, since the apparent weight of the material along this vertical plane is at a minimum. In fact, the absolute value of the negative slope at point P is at a maximum in comparison with other points of the same horizontal plane. The point of inflection P of the shear diagram shown in Figure 2 approximately corresponds to the distance $\frac{h}{2}$ from the vertical slope, where h is the weight of the slope, due to equality of the cross-hatched areas in Figure 2, and rather small shears at the right side of the diagram. Field observations show that the first crack really appears at the distance $\frac{h}{2}$ from the vertical slope, this distance being an approximation.

The writer had the opportunity to observe fissuring of the silt filling the reservoir of San Gabriel Dam No. 2, in the San Gabriel Mountains, Los Angeles County, California. Figure 5 shows the plan and a profile of the silt mass with a stream flowing between practically vertical banks of about 20 ft. high. As soon as a failure occurs (profile, Fig. 5) and the caved mass of silt is eroded, the situation becomes exactly the same as before the original failure, and a new failure is under way. Hence if a vertical bank is unstable and threatens to cave, further fissuring and caving is to be expected, provided some secondary circumstance does not stop or handicap the process.

It is to be noticed that both tension and shrinkage cracks should appear approximately at the same places, namely at the weakest vertical planes caused by the apparent relief of the weight of the earth material by shears.

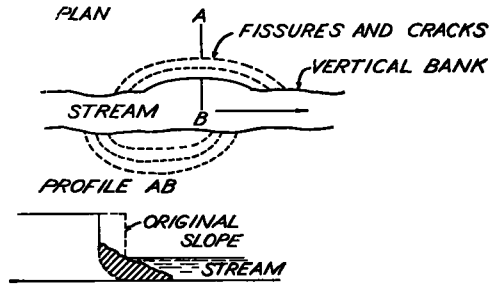

Figure 5. Gradual Fissuring of a Vertical Bank

TENSION VALUE

If the mass shown in Figure 1 were semi-infinite (without vertical slope AB) there would be a lateral pressure at plane AB equal and opposite to the lateral pressure as expressed by area CEG. Each of these pressures would be balanced by uniformly distributed shears along plane DE, and these two systems of shears would be mutually balanced. Thus there would be no horizontal shears along plane DE.

If the lateral pressure at plane AB vanishes, the shearing stresses balancing it also vanish. The shearing stresses balancing pressure CEG remain, but have to gather next to slope AB in order to create moment M_2 required to balance moment M_1. The shear diagram (Fig. 2) has to be traced for the full height of the bank, and the cross-hatched areas properly measured. Each of the cross-hatched areas on that diagram represents the value of

the shearing force T that has to be shifted from one side of the eventual crack to the other. Neither of these two areas can be shifted, however, without applying to the vertical plane passing through the crack, a force T equal to the force to be shifted, but acting in the opposite direction. Thus the vertical plane passing through the crack is acted upon by tensile stresses, the resultant of these stresses being T. It is impossible, however, to originate a tension zone within a body or a mass, using a moment only, without simultaneously originating a compression zone. It should be concluded therefore that the vertical plane passing through the crack is acted upon by a couple consisting of tensile and compressible stresses, with a resultant equal to T. If n is

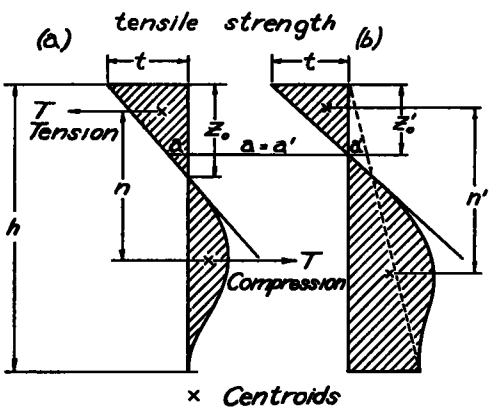

Figure 6. Tension at the Upper Layers of a Mass

the arm of this couple (distance between the centers of tension and compresion), the following relationship holds:

$$Tn = k_r M_2 \tag{8}$$

In equation (8) the expression $k_r M_2$ is the moment acting at the vertical plane of the crack, k_r being a coefficient of reduction. In fact, the value of the lateral pressure acting at different vertical planes of a given mass is gradually reduced by the shearing stresses to become zero at the slope AB. Approximate values of the coefficient of reduction k_r for the particular case of the numerical example that follows are shown on Figure 4.

In Figure 6 (a), a possible distribution of tensile and compressive stresses along a vertical plane passing through the eventual crack (points O or P, Figure 2) is shown. The tensile stress distribution is triangular, whereas the compression stresses follow a curvilinear pattern controlled by a definite value of the distance between the centers of tension and compression. If t is the tensile strength of the given earth material, the following relationship holds just before the first crack is opened:

$$\frac{tz_0}{2} = T, \quad \text{or } z_0 = \frac{2T}{t} \tag{9}$$

In equation (9) z_o is the depth of the tension zone just before the first crack is opened. Obviously the depth z_o does not represent anything constant for a given bank. The value of z_o would change after the appearance of the first crack, even though it is shallow. This is because any fissuring of an earth mass is necessarily combined with radical changes in boundary conditions and stress distribution.

In Figure 6 (b) the stress distribution of Figure 6 (a) is superimposed on the triangular lateral pressure diagram at the vertical plane of the crack (shown in dotted line). This superposition decreases the depth of the tension zone (z'_o instead of z_o) and probably increases the distance between the centers of tension and compression (n' instead of n).

DEPTH OF CRACKS

In his "Theoretical Soil Mechanics" (page 146) Terzaghi assumes that the depth of the tension cracks does not exceed one half of the height of the vertical bank. This statement agrees with preceding considerations. In fact, assuming: (a) circular failure lines (sliding surfaces), (b) location of the crack at one half of the height of the bank as measured horizontally from the slope, and (c) a small cohesion value of the material, it should be concluded that Terzaghi's statement holds. If cohesion is strong (and hence the tensile strength of the material considerable) tension cracks in all probability would not even reach the above mentioned depth and no failure would occur.

NUMERICAL EXAMPLE

In Figure 3 a vertical bank is h = 16 ft. high; the coefficient of pressure at rest K = 0.5, and the unit weight of the earth material γ = 100 lb. per cu. ft. The value of the lateral pressure at a depth z = 10 ft. is 2,500 lb.

(Equation 1), which furnishes the average value of shearing stress between points D and E equal to 156 lb. per sq. ft., with a maximum shear of $2 \times 156 = 312$ lb. per sq. ft. With this value in mind, the shear diagram for the depth $z = 10$ ft. has been traced. What is shown in Figure 3 is merely a first approximation and needs further refinement. The numerical values of Figure 3 without being perfectly correct, are significant enough, however.

The vertical slope of the depth $z = 10$ ft. is overloaded by 175 lb. per cu. ft., i.e. the material behaves as if it weighed $100 + 175 = 275$ lb. per cu. ft. At the distance of 8 ft. from the vertical slope the apparent weight of the earth material is $100 - 60 = 40$ lb. per cu. ft. only. The vertical shears thus "pump" weight from sections rather remote from the vertical slope and deposit it closer to the slope, thus creating a moment designated above by M_2, this moment being required for stability.

FOOT OF THE SLOPE

At the foot of the slope (point B, Figures 1 and 2) there are simultaneously two vertical pressures, zero and γh, the value of γ being increased due to the action of moment M_2 as explained above. Furthermore, point B is settling down, which causes: (a) vertical shearing stresses to oppose this settlement, these shearing stresses extending below and above point B and also on both sides of plane AB and its continuation; (b) heave of the horizontal plane in which point B is located and formation of a tension and a compression zone next to this point. These circumstances make a precise analysis of the stress distribution in the given case very complicated and perhaps not economically justified. This is the reason why formulas derived for idealized infinite slopes are in use, though, strictly speaking, these formulas are not applicable at the end of a finite mass (Figs. 1, 2, or 3), as shown in this paper.

MODEL TESTS

It should be noticed that if a gelatin model of a vertical slope is placed on a hard base, the model does not show settlement of the foot of the slope and the action of the shearing stresses in the neighborhood of that foot. This fact should be paid attention to in the organization of tests and interpretation of the test results.

SUPPORTED VERTICAL SLOPES

If the action of the foot of the slope (point B, Figure 2) is neglected, the shear diagram at the horizontal plane passing through that foot would be practically of the same shape as shown in Figure 2 but with larger ordinates. It is obvious that the pattern of shearing stresses is not discontinued at that plane, but shears are developed in the whole earth mass. Practically they are negligible already at a short vertical distance below the foot of the slope.

In a backfill bounded by a vertical retaining wall, perfectly immovable, indeformable and frictionless, the principal stresses are vertical and horizontal, and there are no shears along either horizontal or vertical planes. The mass of the backfill is "at rest". To bring the backfill into the state of plastic equilibrium, the wall has to move from the backfill. As soon as this motion starts, shearing stresses would develop in all horizontal and vertical planes of the backfill, and particularly at the horizontal plane of the base of the wall. If K is the coefficient of pressure at rest, K_a the Rankine active value, γ unit weight of the earth material and h the height of the wall, the shearing stresses at the horizontal plane of the base of the wall take up and transfer to the earth mass below the base of the wall a lateral pressure F''':

$$F''' = (K - K_a) \cdot \tfrac{1}{2} \gamma h^2 \qquad (10)$$

The shear diagram of the horizontal plane at the base of the wall balances pressure F'''; hence the action of bringing the backfill into the state of plastic equilibrium implies the overloading of the earth material next to the wall and relief in weight at a certain distance from the wall where eventually a crack may appear if the wall moves further. It should be noticed that in the case of a retaining wall the initial ordinate of the shear diagram for $x = 0$ (that is next to the wall) is not zero as in Figures 2 and 3, but has a finite value depending on the material of the wall. Due to the presence of horizontal shears the principal stresses that are vertical and horizontal "at rest" are deviated in the case of plastic equilibrium. Hence the thrust as transmitted to

the wall by minor principal stresses becomes oblique instead of horizontal. The farther the wall moves from the backfill—within a certain limited range, admittedly—the smaller is the lateral pressure on the wall since a part of it is absorbed (balanced) by horizontal shears.

CONCLUSIONS

1. The lateral pressure within an earth mass bounded by a vertical slope is balanced by horizontal shearing stresses. The bulk of the horizontal shears is concentrated between the slope and the first eventual crack.

2. In conjunction with horizontal shearing stresses, vertical shears develop; and as a result of their action, a part of the mass next to the slope is overloaded at the expense of the rest of the mass that is partly relieved of its weight.

3. The moment created by the vertical shears causes tension and fissuring at the upper part of the mass.

4. In an accurate analysis of the stress redistribution caused in the earth mass by the presence of a vertical slope, special attention should be paid to the stresses around its foot.

5. The lateral pressure gradually decreases toward a non-supported vertical slope or a translating retaining wall.

6. Extreme care should be recommended in the interpretation of test results on vertical slope or retaining wall models on hard bases.

ACKNOWLEDGEMENTS

The writer extends many thanks to Mr. Paul Baumann, of the Flood Control District, Los Angeles County, California, and to Dr. Henri Marcus of the Bureau of Yards and Docks, U. S. Navy, for their valuable suggestions concerning stability of slopes; and to Mr. George J. Tauxe, on the staff, University of California at Los Angeles, for reading over the draft of this paper.

SHEAR FAILURE IN ANISOTROPIC MATERIALS POSSESSING ANY VALUES OF COHESION AND ANGLE OF INTERNAL FRICTION

R. J. HANK, *Materials and Tests Engineer*, AND L. E. McCARTY, *Senior Laboratory Assistant, Texas Highway Department*

SYNOPSIS

The radius of a Mohr's circle of failure is obtained in terms of the principal shear strengths existing on the principal planes at failure, induced by the stresses applied in plane deformation such as occurs in the triaxial compression test, for a material possessing any values of cohesion and sliding friction. The required radius is first obtained graphically from a modified Mohr stress circle plotted on the axis of shear stress, and analytical expressions are then developed in terms of cohesion, angle of internal friction, and a principal normal stress, for the radius and for the normal and tangential components of stress acting on the plane of failure. A number of special cases are deduced from the general solution and a Mohr circle of failure is constructed. It is shown that the formula developed applies to anisotropic materials possessing either or both components of shear resistance, i.e., cohesion and sliding or internal friction, and to isotropic materials, as a limiting special case.

The problem may be stated briefly as follows:

From given maximum and minimum values of the shear strength existing at failure (e.g., at the proportional limit) on two mutually perpendicular principal planes during the triaxial test (*1*)[1] and a principal normal stress on one of these planes, it is required to find

[1] Italicized figures in parentheses refer to the explanatory footnotes and list of references at the end of the paper.