Consistency Limits of Clay by the Vane Method

MICHAEL DARIENZO, *Graduate Student* and E. VEY, *Associate Professor*
Illinois Institute of Technology

THE vane apparatus was investigated as a possible device for measuring the consistency of remolded soils. Smaller-size vanes than those ordinarily used in the field were used to measure the shear resistance of four different remolded clays as a function of water content. These shear values were compared with those obtained by unconfined-compression tests at the same water contents. Shear values and rotational moments on the vanes were also compared for the four different soils at moisture contents corresponding to (1) the liquid limit, and (2) the plastic limit. It was found that: (1) vane moment at the plastic limit was fairly constant for all four samples tested; (2) liquid limit as determined by the standard mechanical method corresponded to a definite vane moment for three of the clays tested; and (3) shear resistance of the remolded clays at various moisture contents computed from vane tests vary with the length of vane and bear no consistent relationship to values obtained from unconfined-compression tests.

● THE vane apparatus was originally developed for the purpose of measuring the shear resistance of a soil directly in the ground (*1*). The investigation described here was conducted in the laboratory using small vanes and was concerned with the vane as a possible apparatus for measuring the consistency limits of remolded clays. Disturbed clay samples from four different areas were used in the tests. These were: Chicago, Illinois; Rantoul, Illinois; Oklahoma City, Oklahoma; and Point Mugu, California.

APPARATUS

The three vanes used in the tests are shown in Fig. 1. The blades were made of stainless steel and the vane was formed by brazing each blade to a central stainless steel shaft. The only differences in the vanes were the number of vane blades and the height of blades.

The assembly showing the vane and the apparatus for applying and measuring the load is shown in Fig. 2. The soil container (F) was constructed from 1¼″ dia. plastic tubing and the specimen could be viewed while under test. The framework immediately beneath the vane blade was provided with a spline (P) that fitted the corresponding groove in the soil container. This spline arrangement prevented the container from rotating under the action of the applied moment. The vane (V) was centered by means of a bushing (E) mounted in a horizontal framework (N). A 6-inch brass pulley (D) was attached to the shaft of the vane and the vane suspended vertically. This combination was free to rotate under the action of any force applied to the pully.

The torque needed to rotate the vane blade against the shear resistance of the soil sample was applied to the vane through a flexible cord (G). This cord was attached to a point on the circumference of the pulley (D) and wound around it about 270 deg. The free end was then led through a small pulley (H) attached to a spring balance (I) which measured the force developed. The cord made a turn of 180 deg. through the small pulley (H) and was returned, parallel to its former direction, to a small drum pulley (J). The end of the cord was tied to a point on the circumference of the pulley (J) and the pulley was mounted concentric with the shaft of a 3 rpm. constant speed electric motor (K).

The entire assembly was mounted on a rigid framework with plastic material used for the motor mount (M) and the vane mount (N).

STRESS DISTRIBUTION

In computing the vane shear c from the vane tests it was assumed that the shear stress at failure along the vertical edges of the vane blade was a constant and acted along the surface of a circular cylinder of revolution.

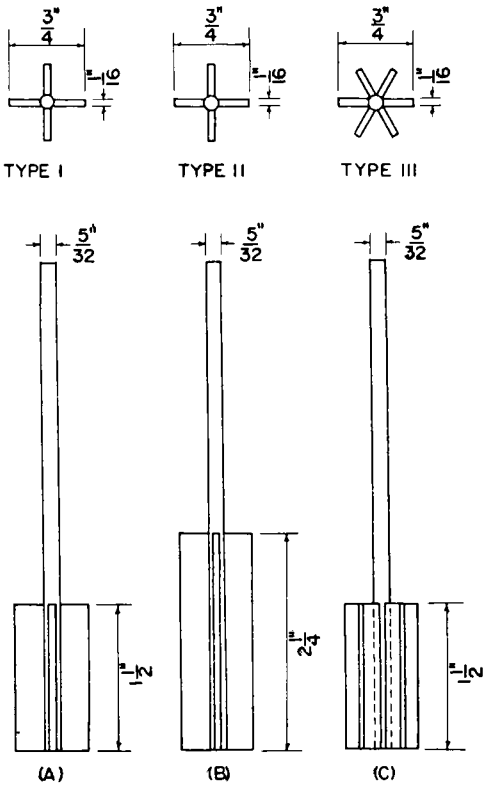

Figure 1. Three types of vane.

The height H and diameter D of this cylinder were equal to those of the vane.

The shear stress at failure along the end of the vane was assumed triangular, increasing from zero at the center to a maximum at the edge. In inserting the vane into the soil specimen the top end was made even with the surface of the soil. Since this end did not come into contact with the soil there was no shear stress developed. A summation of moments about the axis of revolution gives the following expression:

$$M_{\max} = c\left[\frac{\pi D^2 H}{2} + \frac{\pi D^3}{12}\right]$$

where $M_{\max}$ = Maximum Torsional Moment

H = Vertical Height of Vane Blade

D = Diameter of Surface of Revolution

c = Maximum Shear Stress

The above expression together with the assumptions made are similar to those used in the original Swedish investigations by Cadling, Lyman, and Odenstad (*1*).

The values of c used for the unconfined compression tests were computed from the expression

$$c = \frac{Qu}{2}$$

where Qu = Unconfined Compressive Strength. The values of Qu were obtained using a controlled strain testing device.

Before using the vane method for the consistency limits, the tests were made to determine how the vane test data were influenced by changing some of the parameters. These parameters were; the rate of rotation of the vane blade, the number of blades on the vane and the height of the vane blades.

RATE OF VANE ROTATION

In applying the load by means of a constant speed motor through a spring balance (Fig. 2) the rate of deformation of the balance decreased as the ultimate shear strength of the soil was approached. When the ultimate strength was reached the spring deformation was zero and the rate of shearing strain was that given by the rate of rotation of the motor. The rate of strain, therefore, near and at the ultimate was essentially the same for all clay samples tested. This rate of rotation was tested to determine whether it was below that needed to give a minimum shear. A six-bladed vane was used on Chicago clay at constant water content for this test and the rate of rotation was changed by using different size diameters for the small drum mounted concentric with the shaft of the motor. The results of two tests using 1/4" and 9/16" dia. pulleys are shown in Table 1.

The ultimate stresses obtained indicated that both rates of rotation were within the range of minimum ultimate shear stress. It was concluded therefore, that the 1/4-inch-diameter drum on the 3-rpm. motor would be slow enough for any clay at any consistency and this combination was used in all subsequent tests.

EFFECT OF NUMBER OF VANE BLADES

To investigate the effect of the number of blades on the vane the four and six-bladed

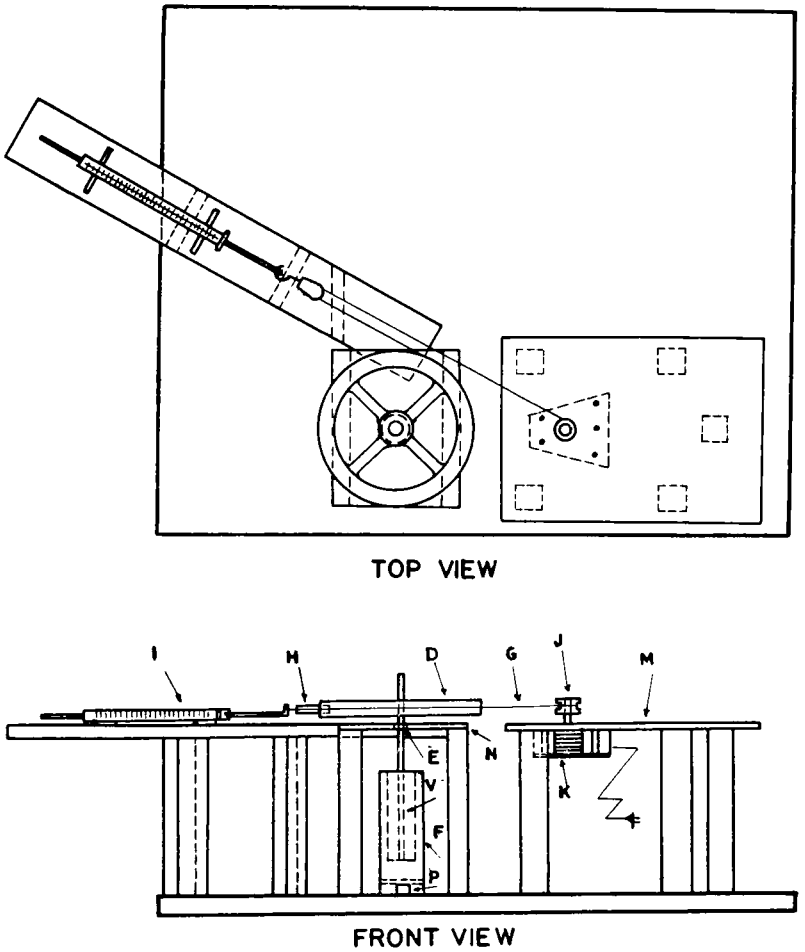

Figure 2. Assembled vane apparatus.

vanes were used on Chicago clay at constant water content and the shear value c was computed at 5-deg. intervals of rotation. These shear values were then plotted as a function of the water content. The results are shown in Fig. 4.

It may be seen that for water contents between the liquid and plastic limits, the number of vane blades does not seem to change the maximum shear at which rupture takes place. However, the angle of rotation at which this maximum shear occurs is greater for the four-bladed vane than for the six-bladed vane. The six-bladed vane was used for the vane tests on the consistency limits.

EFFECT OF LENGTH OF VANE

All three types of vanes were used to determine what effect, if any, the height of the vane blades had upon the maximum shear value obtained. Chicago clay at constant water content was used and the maximum moments with their corresponding shear values for two tests are shown in Table 2.

It may be seen that the maximum shear obtained using vane type II was less than that using either vane type I or vane type III . To illustrate this more clearly the difference between the maximum moment using four-blade vanes type II and I is given in column 5. This difference is equal to the moment exerted on a

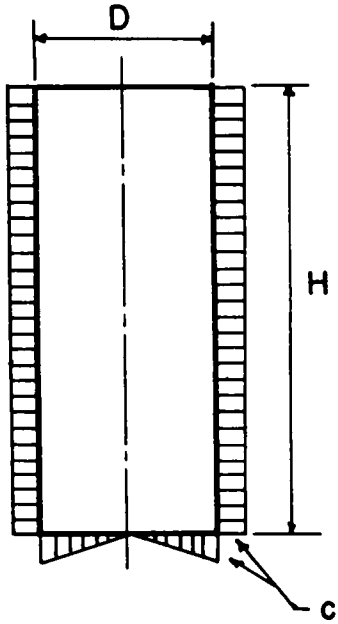

Figure 3. Stress distribution around vane blade.

cylindrical surface ¾″ in height. The corresponding shear stress is considerably less than than any of the rest and indicates that the assumption of uniform stress at failure along the lengths of the two vanes is incorrect.

It is believed that this difference in stress distribution is produced by shear stresses on vertical planes near the edges of the vanes created by the friction between the soil and the vane blades as the vane is being inserted. An indication of this is given by the fact that a depression was formed at the top surface of the soil around the vane blades during insertion. The magnitude of this stress would be increased by increasing the area of blade surface in the vertical direction. It would probably dissipate with time after insertion but the rate of dissipation would be smaller for long vanes than for short ones. The consistency of the clay would also influence this stress because of its effect on the adhesion between the clay and the metal vanes.

TABLE 1
EFFECTS OF RATE OF ROTATION

Test	Method of Rotation	Rate of Rotation	Shear (#/in.²)
		deg./sec.	
1	Constant speed motor	0.465	0.847
2	Constant speed motor	0.515	0.847

The results for vane I and III in Test 1 Table 2 verify the preliminary tests which showed no change of ultimate stress with change in number of blades. For Test 2, however, the water content changed slightly in the interval between different vane readings. This makes the comparison of shear strength for the three vanes less valid than Test 1. The difference noted when using ($M_{11} - M_1$) to obtain the maximum stress again indicates a condition existing similar to that found in Test 1.

CONSISTENCY LIMITS

The resisting soil shear of any clay at the liquid limit is believed to be a constant regardless of the magnitude of the liquid limit. If this is true then the shear values at the liquid limit for all clay soils should be the same. To test the above and also to determine whether a similar relationship also existed for the plastic limit, it was decided to obtain the liquid limits and plastic limits of four different clay soils by the standard methods and compare the vane shear data for these soils at each of the limit points. The values of maximum shear at several intermediate water contents were also obtained for three of the soils used. The entire shear data were then plotted on a log-log scale as a function of the water content (Fig. 5).

The points for the Chicago clay and Point Mugu clay are shown by the two straight lines, while the values for the Oklahoma and Rantoul clays lie along the line for the Chicago clay. It is interesting to note that the shear value at the plastic limit is constant for the four soils while the shear at the liquid limit shows some variation particularly for the Chicago clay. The variations seem to be related to the plasticity index. The plasticity indexes by the standard method for the four soils are as follows: Chicago clay—5.6; Rantoul clay—7.8; Oklahoma clay—9.1; Point Mugu clay—24.5.

The variations in vane shear at the liquid limit might be accounted for by considering the conditions under which the liquid limit test is conducted. The Casagrande liquid limit device applies a series of blows to the soil at or near the liquid limit and the response of the

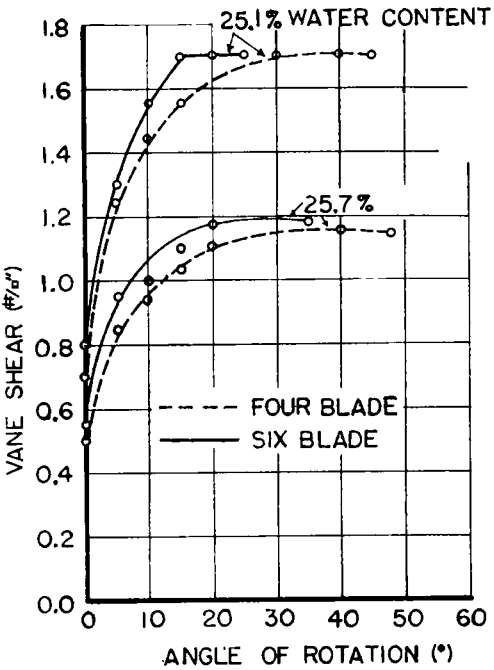

Figure 4. Shear resistance as a function of angular rotation of vane blade.

small soil mass is used to define the consistency for the liquid limit. This is essentially a dynamic test and some of the inertia stresses created in the soil under every blow would show up as pore pressures. In lean clays this would substantially reduce the shear resistance of the saturated soil under a given blow. In fat clays this instantaneous loss in shear strength would not occur since the shear strength is derived entirely from the cohesion.

It may be noted that according to the standard plasticity index tests the Chicago clay had the lowest plasticity index. The Point Mugu clay was the highest with the Rantoul and Oklahoma clays lying in between. The vane shear resistance as a function of water content (Fig. 5) shows that the Rantoul clay and the Oklahoma clay have identical vane shear resistances at the liquid limit with the Point Mugu clay having only a slightly lower value. The Chicago clay, on the other hand, having only a slightly lower plasticity index than the Rantoul and Oklahoma clays, showed a substantially higher vane shear resistance at the liquid limit.

TABLE 2
COMPARISON OF DIFFERENT SIZE VANES USING CHICAGO CLAY

(1) Test	(2) Type of Vane	(3) (%) Water Content	(4) Moment (in. #)	(5) $M_{II} - M_I$ (in. #)	(6) Shear (c) (#/in²)
1	I	25.7	1.685		1.17
	II	25.7	2.260		1.07
	III	25.7	1.685		1.17
				0.575	0.86
2	I	20.1	10.50		7.30
	II	20.6	13.86		6.55
	III	20.5	10.11		7.00
				3.36	5.00

This seems to imply that there might be a certain critical plasticity index below which the dynamic effect in the standard liquid limit test produces quite a large reduction in the shear resistance, whereas above this value the static vane shear and dynamic method give essentially the same results. The standard plastic limit test is free of dynamic influence and as noted before, the vane test results show a constant value for all the soil samples tested.

Although the data shown in Fig. 5 were obtained using only four clays, the pattern seems to indicate a relationship similar to that derived in the Vicksburg tests (*4*). In these tests 767 liquid limit tests were performed by the standard method and the data tabulated on a statistical basis. The flow lines for each test were then plotted on a logarithmic scale with the water content as a function of the number of blows. The statistical mean slope of these lines was then used to derive the following equation in which the water content is the only unknown:

$$\text{Liquid Limit } (L_w) = w_N \, (N/25)^{\tan B}$$

w_N = Water Content at N Blows

$\tan B$ = Slope of Flow Line = 0.121

B = Angle the Flow Line Makes With the Horizontal

A similar treatment of the data of Fig. 5 gives the following equations for both the liquid limit and plastic limits based on the vane shear resistance and using a vane identical in size and shape to type III.

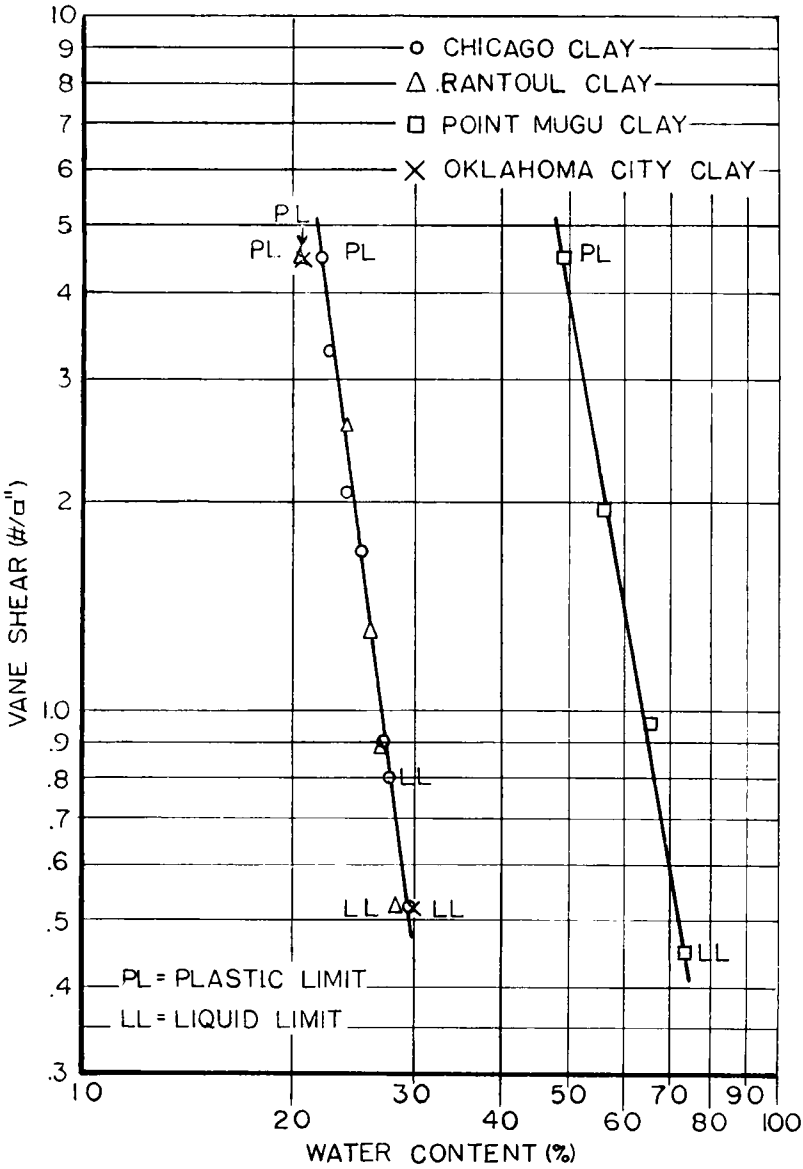

Figure 5. Vane shear resistance as a function of water content (log-log scale).

Liquid Limit (L_w) = $w_c\ (c/0.59)^{\tan B}$

Plastic Limit (P_w) = $w_c\ (c/4.49)^{\tan B}$

w_c = Water Content at Given Vane Shear Test

c = Shear Value Obtained in Vane Test

$\tan B$ = Slope of Line Obtained by Plotting Water Content Versus Vane Shear to Logarithmic Scale = 0.153

0.59 = Average Value of Vane Shear at L_w by Standard Method

4.49 = Average Value of Vane Shear at P_w by Standard Method

To test these formulas each one of the soils was tested in the vane device at an arbitrary water content and the liquid limit and plastic limit computed from the formulas. These values were then compared with the liquid limit and plastic limit as obtained using standard tests. The results are shown in Table 3.

The statistical method might be used to extend to all soil a relationship for the plastic limit, so that using the vane device, only one test would be needed to give the plastic limit. A similar relationship may also be obtained for the liquid limit but some shear value for this limit would have to be prescribed. This value might be taken as the vane shear value corresponding to the Casagrande liquid limit for fat clays.

TABLE 3
COMPARISON OF ATTERBERG LIMITS

Type of Soil	Liquid Limit (%) by Standard Test	Liquid Limit (%) by Formula	Plastic Limit (%) by Standard Test	Plastic Limit (%) by Formula
Chicago	27.6	28.2	22.0	21.7
Rantoul	28.3	30.5	20.5	22.3
Oklahoma City	29.8	28.3	20.7	21.4
Point Mugu	73.5	67.5	49.0	49.5

TABLE 4
COMPARISON OF SHEAR VALUES FOR CHICAGO CLAY

Water Content (%)	Vane Shear c(#/ft²)			Water Content (%)	Unconfined Compression (#/ft²)		
	Vane I	Vane II	Vane III		Average diameter	Original diameter	Poisson's ratio = 0.5
20.1	900			19.6	1130	1360	1090
20.1	1050			19.6	1140	1375	1100
20.1	1010			19.3	1010	1230	992
17.8	1915			17.8	2530	2880	2300
17.8	1725			17.2	2530	2880	2300
17.8	1725			16.6	2580	2750	2200
20.6		946					
20.6		946					
20.6		946					
19.6		1950					
19.6		1845					
19.6		1895					
20.5			975				
20.5			1012				
20.5			1012				
18.5			1875				
18.5			2025				
18.5			1950				

VANE SHEAR AND UNCONFINED COMPRESSION

As a final test the three types of vane were used in Chicago clay and the vane shear values were compared with those obtained using the remolded clay sample in a controlled strain unconfined compression test (Table 4). Both the vane test and the unconfined test were conducted at water contents which were as close to each other as was practically possible. Actually these values probably should have been closer considering the sensitivity of both the vane shear and the unconfined-compression shear to slight changes in water content. The best that could be accomplished was to compare them over a range of water contents.

For the range of water contents above the plastic limit, the forces on the vanes approached the capacity of the vane device, particularly in the case of the type II vane. Moreover there is some indication that the number of blades does make a difference in the shear values obtained for the range of water contents above the plastic limit. In general, there seems to be a tendency for the vane values to be lower than those obtained from unconfined-compression tests. This is probably due to the fact that zone of disturbance due to insertion is about the same magnitude for small vanes as for large vanes.

In the case of small vanes the shear surface is very close to this zone and the shear value measured would be thereby reduced. The surface of shear for the large vanes, however, is farther away from the zone of disturbance and the shear values measured would be effected very little, if any, by the disturbed central zone. This could account for the fact that field tests using larger vanes have in many cases (*2*, *3*) given shear values in agreement with unconfined-compression tests.

CONCLUSIONS

It is recognized that it would be necessary to have much more test data and a great number of clays before any generalizations could be proved. However, from the data obtained the following trends are indicated:

1. The vane shear at the plastic limit is probably very nearly a constant for all clays. The vane therefore provides a convenient tool for determining plastic limits. It would have

the advantage of being a purely mechanical measurement and as such, more accurate and free of the personal factor which is prevalent in the present standard method.

2. The liquid limit as determined by the Casagrande mechanical device gives the water content at which a clay flows under a series of blows. Where the soil may be subject to dynamic forces this method would be the proper type of liquid limit test. For static conditions a more general definition of liquid limit would be the water content of the soil at a prescribed static shear resistance. The vane can be used to measure the shear resistance with considerable accuracy. The prescribed vane shear value might be that found at the liquid limit by the Casagrande method for non-sensitive fat clays.

3. Comparisons made between shear strengths by unconfined compression tests and vane tests showed lower shear values by the vane method, in general. This seems to be due to the relatively large zone of disturbance for small diameter vanes. This disturbance has a much greater influence on the vane shear strength at water contents below the plastic limits than at higher water contents. The data is inadequate to make any evaluation of the accuracy of the shear strengths as obtained by the two methods.

REFERENCES

1. Cadling, Lyman and Odenstad, Sten: An Apparatus For Determining the Shear Strength of Clay Soils Directly In the Ground. Royal Swedish Geotechnical Institute Proceedings No. 2, Stockholm 1950.
2. Skenpton, A. W.: Vane Tests In the Alluvial Plain of the River Forth, Near Grangemouth, Geotechnique, 1948, Vol. 1 Nr. 2 pp. 111–124.
3. Vey, E. and Schlesinger, L.: Soil Shear Tests by Means of Rotating Vanes. (Proceedings of the Twenty-Ninth Annual Meeting of the Highway Research Board, 1949).
4. Simplification of the Liquid Limit Test Procedure. Corps of Engineers, U. S. Army Waterways Experiment Station, Vicksburg, Mississippi, Technical Memorandum No. 3-286, 1949.

Composition and Engineering Properties of Soil (III)

T. William Lambe, *Associate Professor* and *Director*,
R. Torrence Martin, *Head of Soil Analysis Section*,
Soil Stabilization Laboratory, Massachusetts Institute of Technology

Two natural soils, one from east Africa and the other from the western United States, composed predominantly of the clay mineral halloysite, were subjected to plasticity, compaction, permeability, strength, and frost tests. The halloysite samples exhibited low maximum densities and high optimum water contents, the extreme being a maximum density of 71 lb. per cu. ft. at an optimum water content of 47 percent. Since the sample of halloysite from east Africa was the halloysite $4H_2O$ form, dehydration studies on the hydrated form and comparative tests on the hydrated and dehydrated form were possible. These tests showed that air drying the hydrated form at room temperature caused it to lose irreversibly some of the interlayer water.

The natural fines of a sandy clay from Virginia were removed and successively replaced with nontronite made homoionic to the following ions: sodium, potassium, calcium, magnesium, and ferric iron. Plasticity, compaction, permeability, strength, and consolidation tests on the prepared soil were run. As expected, the sodium form