Simplified Design Method for Reinforced Concrete Pipe Under Earth Fills

DUDLEY P. BABCOCK

Bureau of Public Roads

● PROPOSED criteria for the design and installation of reinforced concrete pipe culverts are being studied by the U. S. Bureau of Public Roads in cooperation with Professor M. G. Spangler of Iowa State College. In connection therewith, an attempt has been made to simplify the prevailing methods of computing the necessary pipe strengths. This paper explains the method. The proposed criteria are appended together with some suggested tests.

BACKGROUND

At first blush, it would seem that the way to determine the earth load on a buried culvert is to take the weight of the superimposed material. In the case of tunneling, however, it has long been known that this assumption is too conservative. If we tunnel under a mountain, we know that the tunnel does not have to support the weight of the mountain above it. We say that the earth "arches" over and so only a small fraction of the earth above the tunnel need be supported by the tunnel lining. Qualitatively speaking, this is all right, but to be able to figure how much to allow for this arch action is another matter.

The whole subject of loads on tunnels was immensely simplified by Professor William Cain of the University of North Carolina about 40 years ago (*1*). He assumed that the rectangular prism of earth directly over the tunnel is supported only in part by the tunnel, the rest of the support coming from friction between the vertical sides of the prism of earth above the tunnel and the surrounding earth. By assigning a value u to the coefficient of internal friction between earth and earth, the relation between vertical and horizontal forces within the earth mass may easily be determined by the Rankine formula. The horizontal forces at each depth multiplied by the coefficient of friction were assumed to give the vertical frictional force acting on the prism at that depth. Integrating these forces gave the total upward force which, when deducted from the weight of the prism gave the load which the tunnel must sustain. Although these concepts are very simple, the resulting formulas are quite complicated. This is due to the interrelation of the vertical load and vertical upward force.

The vertical load at a given depth equals the weight of the superimposed earth minus the total frictional upward force. But the increment of frictional upward force at a given depth is proportional to the net vertical load. The formula which Professor Cain developed was:

$$V = \frac{1}{ku}\left(w\,\frac{A}{U} - c\right)(1 - e^{-ku(U/A)h}) \quad (1)$$

h = height of top of earth above top of tunnel (feet).

V = load per square foot on top of tunnel (pounds per square foot).

k = $\dfrac{\text{horizontal earth pressure}}{\text{vertical earth pressure}}$.

A = horizontal area of top of tunnel (square feet).

w = weight of earth per cubic foot (pounds per cubic foot).

U = perimeter of the horizontal section of the tunnel. For a long tunnel, it may be taken as twice the length, and the width neglected (feet).

c = coefficient of cohesion.

u = coefficient of internal friction.

e = base of Naperian logarithms = 2.718281 +

To illustrate this formula, let us assume a long tunnel 40 feet wide under a mountain of infinite height. If we assume $ku = 0.19$, $w = 120$ pounds per cubic foot, $c = 0$, we obtain $V = 12{,}630$ pounds per square foot.

According to Professor Cain's formula, the pressure on a tunnel roof increases as the height of earth over the tunnel increases—but at a slower and slower rate. Even for an infinite height, the tunnel pressure is only a few thousand pounds.

About the same time that Professor Cain developed his formula for earth pressure on tunnels, Dean Anson Marston of Iowa State College, assisted by Professor A. N. Talbott of Illinois University, developed a mathematical equation for the loads on pipes in trenches (*2*). His assumptions were the same as Professor Cain's except that he did not consider cohesion. The assumption that there is no cohesion is on the side of safety because it results in the maximum probable load on the conduit. This maximum load may develop at any time as a result of heavy rainfall or other action which may eliminate or greatly reduce cohesion between the backfill and the sides of the trench.

If a culvert is placed in a trench and then backfilled, he assumed that the prism of backfill directly over the culvert will be partly supported by the sides of the trench, leaving a greatly reduced part to be carried by the culvert.

The following are his formulas:

$$W_c = C_d\, w\, B_d^2$$

where W_c = the load carried by the culvert (pounds per linear foot).

w = weight of backfill per cubic foot (pounds per cubic foot).

B_d = the width of the trench (feet).

C_d = a parameter having the value:

$$C_d = \frac{1 - e^{-2ku'(H/B_d)}}{2ku'}$$

e = the base of Naperian logarithms.

k = $\dfrac{\text{horizontal earth pressure}}{\text{vertical earth pressure}}$.

u' = coefficient of friction between the backfill and the sides of the trench.

H = height of fill over the top of culvert (feet).

If H is infinite, C_d becomes $C_d = (1/2\ ku')$. Taking $ku' = 0.19$ as before, $C_d = 2.63$. If we assume $w = 120$ pounds per cubic foot as before and the trench width as 5 feet, we have $W_c = (2.63)\ (120)\ (25) = 7900$ pounds per linear foot. According to Professor Marston's formula and with the constants as assumed, this is the maximum load on a culvert in a 5-foot trench of infinite depth. Unfortunately, when the Marston theory is applied to pipes placed on the original ground surface instead of being placed within a trench, the problem becomes still more complicated. The fill along the sides of the pipe tends to settle more than over the pipe (i. e., if the pipe is rigid and not flexible) so the friction along the vertical faces of the prism over the pipe tends to drag the prism down rather than hold it up. Thus, the load on the culvert is often greater than the weight of the superimposed prism of earth. The greater complication, however, arises from the fact that the frictional forces may not be operative to the top of the fill. Mathematically, it may be shown that, above a certain plane over the culvert, the settlement of the fill is uniform rather than being greater outside the prism than within it. Thus, the culvert is subjected to the weight of a prism of earth dragged down by the friction along its vertical sides plus a load caused by the earth superimposed above the "plane of equal settlement."

On the assumption that the settlements of the interior prism and the exterior masses of soil below the plane of equal settlement are caused only by the fill material above the plane of equal settlement, Dean Marston developed the following equation for the height above the top of the culvert of the plane of equal settlement:

$$e^{\pm 2ku(H^e/B^c)} \mp 2ku\,\frac{H_e}{B_c} = \pm\, 2kur_{sd}p + 1$$

where: u = coefficient of internal friction of of the earth.

B_c = outside diameter of pipe (feet).

k = $\dfrac{\text{horizontal earth pressure}}{\text{vertical earth pressure}}$.

e = base of Naperian logarithms.

H_e = height of plane of equal settlement above top of culvert (feet).

r_{sd} = the settlement ratio, defining the relative settlement of the top of the culvert and the earth along side.

p = projection ratio, defining the amount the top of culvert projects above the original ground surface divided by the outside pipe diameter.

If the pipe is placed truly on the original ground surface without any shaping of the bedding, then $p = 1$.

If a template is used to bed the pipe so that its lower surface is slightly below the original ground surface, then p is less than 1.

Having found the location of the plane of equal settlement, one is able to write the equation for the vertical load on the culvert, viz.:

$$W_c = C_c\, w\, B_c^2$$

where W_c = the earth load borne by the culvert, per linear foot.

w = weight of earth per cubic foot (pounds per cubic foot).

$$C_c = \frac{e^{\pm 2ku(H^e/B^c)} - 1}{\pm 2ku} + \left(\frac{H}{B_c} - \frac{H_e}{B_c}\right) e^{\pm 2ku(H^e/B^c)}$$

For many years prior to the death of Dean Anson Marston, Professor M. G. Spangler of Iowa State College had been closely associated with him in the investigations of loads on buried pipe and had been the author or coauthor of numerous published reports on the subject. Upon the death of Dean Marston in 1949, Professor Spangler succeeded him in this activity. Professor Spangler is responsible for the development of a theory concerning the location of the plane of equal settlement which is somewhat different from Dean Marston's. Spangler's theory is based on the assumption that the settlements of the interior prism and the exterior masses of soil are caused by the full height of fill above the top of the culvert and his equation for the location of the plane of equal settlement is as follows:

$$\left(\frac{1}{2ku} \pm \left(\frac{H}{B_c} - \frac{H_e}{B_c}\right) \pm \frac{r_{sd}p}{1 + 2j}\right) \frac{e^{\pm 2ku(H^e/B^c)} - 1}{\pm 2ku} \pm \frac{1}{2}\left(\frac{H_e}{B_c}\right)^2 \pm \frac{r_{sd}p}{1 + 2j}\left(\frac{H}{B_c} - \frac{H_e}{B_c}\right) e^{\pm 2ku(H^e/B^c)} - \frac{1}{2ku}\frac{H_e}{B_c} \mp \frac{H}{B_c}\frac{H_e}{B_c} = \pm r_{sd}p\frac{H}{B_c}$$

In this equation, j is the ratio of the widths of the exterior masses of earth, over which the settlements are considered to be uniformly distributed, to the width, B_c, of the interior prism.

Spangler has explained the two theories of the determination of the location of the plane of equal settlement (*3*) and has pointed out that, for moderate values of H/B_c and r_{sd}, the load coefficient C_c is essentially the same for both theories but that for higher values of these variables the load coefficients given by his theory are somewhat smaller than those given by the Marston theory.

The Spangler theory has been adopted for use in the development of the method of design described in this paper and the lower right hand diagram of Chart II (see Appendix, Figure 1) is derived from his equation. In this equation, in accordance with Spangler's recommendation, j has been taken as equal to 1.0.

It is interesting to note the assumptions made in this theory:

1. That the rectangular prism of earth located directly over the culvert acts as a unit from the plane of equal settlement down to the top of the culvert.

2. That the coefficient of friction is fully operative over the full height of this prism. This is not necessarily true. It is well known that, although the vertical forces due to friction cannot exceed the coefficient of friction, they may be much less, depending on the relative motion of the sliding parts.

3. In the Spangler formula, the width j must be assumed or found from experiment. If we take $j = 1$, we, in effect, are assuming that there are two imaginary prisms of earth flanking the two sides and of the same width as the interior prism.

4. That the vertical frictional forces on the sides of the interior prism depend upon the horizontal earth pressures within that prism and are independent of the horizontal earth pressures outside. For example, take the case of a pipe in a trench. The theory assumes that a large part of the weight of the center prism is transferred to the side prisms. This, in turn, increases the vertical pressures in the side prisms and relieves those pressures in the center. Now, the Marston theory bases the frictional effect along the vertical faces on the pressures within the central prism and ignores the pressures in the side prisms.

The above assumptions are in addition to the usual ones, viz., a constant modulus of elasticity, Hooke's law, etc.

Notwithstanding the many assumptions made in the development of this theory, tests thus far tend to substantiate its accuracy.

Take the well known Farina tests made by A.R.E.A. in 1925. For rigid culverts, if we assume the product of the settlement ratio and projection ratio as 0.4, we obtain the following correlation between the test results and the Marston theory.

Height of Fill Above Top of Culvert	Load Sustained (pounds per square inch)	
	Marston theory	Tests
5	4.1	3.0
10	9.3	6.6
15	15.7	12.5
20	22.2	19.5
25	28.7	26.5
30	35.1	33.7
35	41.6	41.0

For flexible culverts assuming the product of settlement ratio and projection ratio = −0.6.

Height of Fill Above Top of Culvert	Load Sustained (pounds per square inch)	
	Marston theory	Tests
5	2.6	1.8
10	4.0	3.4
15	5.9	5.3
20	7.7	7.4
25	9.6	9.5
30	11.4	11.8
35	13.3	14.0

Now it must be admitted that the close correspondence between theory and tests depends to some extent upon the choosing of suitable values for the product of settlement and projection ratios.

Direct measurements to determine the settlement ratio in the field have been somewhat limited. The ratio depends upon the character of the soil, its depth and compaction and differs to some extent with each culvert. If some simple way can be found to obtain this constant, the value of the Marston-Spangler theory will be greatly enhanced. In the meantime, experimental observations have been made (*3*), as a result of which Spangler suggests the following values for rigid culverts: ordinary soil + 0.5 to + 0.8; culvert on foundation of rock or unyielding soil + 1.00.

The difficulty of designing pipe culverts does not end with determining the vertical load that they must sustain. Pipes are rated according to their ability to sustain concentrated, not uniform loads. Also, the method of bedding markedly affects the ability of a pipe to support the earth upon it.

The ratio of the load capacity of the pipe as installed to the 3-edge bearing load is known as the load factor. It is dependent on the method of bedding used and, to a small extent, on all other elements of the design—height of fill, size of pipe, projection ratio, settlement ratio, etc.

SIMPLIFICATIONS

In his book, *Soil Engineering*, Professor Spangler has greatly simplified the use of this complicated mathematical analysis by the plotting of curves. It may be further simplified by the assumption of average conditions where the corresponding values have only a minor effect on the result.

Let us start with the load factor. The Spangler formula is:

$$L_f = \frac{1.431}{N - xq}$$

N is a factor depending solely on the class of bedding. x depends on the projection ratio.

$$q = \frac{\left(H + \frac{pB_c}{2}\right)(B_c kpw)}{W_c}$$

The quantity q may vary all the way from 0.06 to 0.20, but its effect on L_f is rather small except when x is large, i. e., for large values of p, so q was assumed 0.18 which corresponds to the larger values of p. Making this assumption and using Spangler's values of N

and x, curves were plotted for L_f with the projection ratio and bedding class as arguments. These diagrams are in the upper right hand corner of Chart II (see Appendix, Figure 1). The upper left hand chart solves graphically the equation:

$$\frac{W}{B_c} = \frac{W_s B L_f}{f_s B_c}$$

where: B = the inside diameter of the pipe (feet).

B_c = the outside diameter of the pipe (feet).

W = the allowable uniform load (pounds per linear foot of pipe).

W_s = the 3-edge bearing value (pounds per linear foot of pipe).

f_s = the safety factor.

f_s was taken at 1.25 and B_c/B at 1.20.

The lower left hand chart solves the equation:

$$C_c = \frac{W}{wB_c^2}$$

w = the weight of earth—was taken as 120 pounds per cubic foot.

The lower right hand chart is simply the well-known Marston-Spangler diagram extended to include values of C_c and H/B_c up to 20.

The charts are so placed that one may start with the projection ratio, proceed successively to the type of bedding, the D value of the pipe, its outside diameter, the product $r_{sd}\,p$ and obtain the H/B_c. Here, H is the allowable fill over the pipe in feet.

To further simplify the design of rigid pipe culverts, tables were constructed (see Appendix) based on average soil conditions. Professor Spangler gives the settlement ratio for ordinary soil as varying from +0.5 to +0.8. The value 0.70 was used together with the various bedding classes and projection ratios in Chart II (Fig. 1) to form tables giving the required D values of the pipe. It was soon found that the size of pipe had comparatively little effect on the D value required except where the pipe is installed in a trench. It was decided, therefore, to make all derivations for a 60-inch pipe and then place a note on the table stating that the same D values can be used for other pipe sizes except in the case of trench condition. In this case, where the size of the pipe differs materially from 60 inches, recourse must be had to Chart II (Fig. 1). The columns representing the trench condition have a twofold value. On rare occasions a culvert is installed wholly within a trench. It may also be installed in a trench much deeper than the pipe diameter and then a fill placed over it. In this case the required D value of the pipe may be easily estimated by interpolating between the "p = 0" column and the "trench" column.

The columns marked B_1 or C_1 cover the cases of B and C beddings combined with the "imperfect ditch" method devised by Professor Marston. This consists of putting in a compacted fill about 1-pipe diameter above the top of pipe and then re-excavating a trench directly over the pipe. This trench is then filled with very loose compactible material. Such material as brush, leaves, or sawdust may be used to a limited extent so as to induce "arching action" over the trench. As these columns represent a rather special case, Spangler's Figure 25-12 in his book, *Soil Engineering*, with $r_{sd} = -0.5$ was used rather than Chart II (Fig. 1).

A simpler table could have been made up in which standard strengths only were shown. Generally speaking, only 2000 D and 3000 D pipe are being manufactured, although some states are now specifying 4000 D pipe in special cases. At the same time, manufacturers are making pipe on an experimental basis up to 6000 D. As the field is now wide open for new developments, it seemed best to specify the minimum required strength for a given bedding and projection ratio and then permit the contractor to furnish pipe of at least that strength.

Table 1 (Appendix) may also be used in making comparative estimates of the various methods of installing the pipe.

Suppose one is required to design a given pipe under a 50-foot fill with zero projection ratio. He may choose between A, B, B_1, C, and C_1 beddings. The required strength of pipe for the various classes is taken from Table 1 as follows: Class A—3000 D; Class B—4500 D; Class B_1—2600 D; Class C—5400 D; Class

C_1—3100 D. The next step is to estimate the costs of installation of the various classes. "C" bedding is undoubtedly the cheapest, but it requires 5400 D pipe which may be difficult and expensive to obtain. By adopting the B_1 bedding (which is the B bedding with the addition of the imperfect ditch method above it), a pipe of less than half the strength may be used with safety. Thus, the cost of installation may be weighed against the cost of pipe to determine the most acceptable design.

MINIMUM ALLOWABLE COVER

For structural plate pipes, the American Association of Highway Officials (*4*) specify for minimum cover as follows:

Load	Surface	Pipe, to 120 inches	Pipe, over 120 inches	Pipe Arches
H15 and H20	Unpaved and flexible pavements	D/5—12-inch minimum	24-inch minimum	S/10—12-inch minimum
	Rigid pavements	D/7	18-inch minimum	S/14

D = diameter of pipe (inches); S = span of pipe-arch (inches).
Minimum of 6-inch cushion below slab.

Notice that, as a rule, the bigger the pipe the greater the required minimum cover. It may be that the controlling factor in this case is the pipe deflection. For a concrete pipe, the reverse is the case. The smaller the pipe the more cushion is required. This is because concrete pipes are rated for concentrated load per foot diameter. Therefore, the big pipes are capable of carrying a much larger concentrated load than the small ones. To illustrate this property of concrete pipe, let us refer to Figure 2 (Appendix). Here, the H20 truck loads are carried down through the fill to a flat slab by the Boussinesq theory, the resulting moments determined by the Westergaard theory (*5*) and then the equivalent uniform loads and equivalent fills computed. Notice that for the 2-foot size, the effect of the live load on a bare pipe is equivalent to a fill of about 42 feet, whereas for a 10-foot pipe, it is only about 6½ feet. For a 2-foot pipe, the minimum total load occurs when the fill is about 5 feet, whereas for the 10-foot pipe, the minimum total load corresponds to about 0.5-foot fill. Notice also that for fills over about 6 feet the size of the pipe affects the total equivalent fill but little.

PROPOSED NEW CRITERIA

A proposed set of criteria for the design and installation of concrete pipe are appended herewith.

The following are among the more important provisions:

1. The $\frac{1}{100}$-inch crack criteria may now be substituted for the ultimate 3-edge bearing load or the two may be used in conjunction, as the engineer may direct (see Appendix 2.2).
2. There are now four different classes of beddings specified, two of which may be used with the imperfect ditch method, making six categories in all.
3. A column is given in Table 1 for pipes wholly installed in a trench.
4. Four types of joints are permitted.:

mortar	rubber gasket
grout	oakum

PROPOSED TESTS ON CONCRETE PIPE

There are many uncertainties in the design of pipe under heavy fills, but there are three which pre-eminently appear to need field study.:

1. The effectiveness of the various classes of bedding.
2. The imperfect ditch method of reducing the load coming on the pipe.
3. The ability of an elliptical pipe, with major axis vertical, to withstand heavy fills.

Three culverts could be constructed side by side and 25 feet apart. They should be about 50 feet long under the maximum fill height plus the necessary lengths under side slopes. The pipe size should be about 5 feet to enable men to work in the pipe easily, the pipe strength to be A.S.T.M. C76, Table 2.

The pipe could be divided into six 25-foot test sections.:

1. Class D bedding, i. e., no special compaction used.
2. Class B bedding, i. e., every effort made to thoroughly compact the material around the pipe.
3. Class A bedding, i.e., the pipe to be supported on a continuous cradle.
4. The pipe to be installed in a narrow trench about 6 feet deep, which is to be backfilled with lean concrete. This has

been suggested as an alternate for the continuous cradle.

5. Class B_1 bedding, i.e., Class B bedding used and in addition the imperfect ditch method used above it.
6. Specially designed elliptical pipe used with major axis about 8 feet and minor axis 5 feet placed with major axis vertical. It is evident that a transition section must be designed between the round pipe and the elliptical pipe.

According to the Marston-Spangler theory, the load on the pipe is not affected by the type of bedding nor the shape of the culvert. Therefore, the load as obtained for one case should apply to the other cases also, except for the elliptical culvert and imperfect ditch cases. A slight correction must be made in the former case because the top of pipe is 3 feet higher than for the other cases. For the imperfect ditch case, a separate determination of load must be made.

After the fill is completed, the efficiency of the shape of the pipe and class of bedding may be determined from the measured pipe deformations.

REFERENCES

1. CAIN, W., *Earth Pressure, Retaining Walls, and Bins.* John Wiley and Sons, Inc., 1916, pp. 208–217.
2. MARSTON, A., AND ANDERSON, A. O., "The Theory of Loads on Pipes in Ditches and Tests of Cement and Clay Drain Tile and Sewer Pipe," Bulletin No. 31, Iowa Engineering Experiment Station, p. 33.
3. SPANGLER, M. G., "Field Measurements of the Settlement Ratios of Various Highway Culverts," Bulletin 170, Iowa Engineering Experiment Station, 1950.
4. "Standard Specifications for Highway Bridges," American Association of State Highway Officials, 1953, p. 252.
5. WESTERGAARD, H. M., "Computation of Stresses in Bridge Slabs Due to Wheel Loads," *Public Roads*, March 1930.

APPENDIX

DESIGN AND INSTALLATION CRITERIA FOR REINFORCED CONCRETE PIPE CULVERTS

GENERAL

1.1

These criteria cover the design and installation of circular or slightly elliptical reinforced concrete pipe culverts.

1.2

Pipe shall be (a) round pipe reinforced by two lines of circular reinforcement; (b) round pipe reinforced by one line of elliptical reinforcement; (c) elliptical pipe reinforced with one line of circular reinforcement.

DESIGN

2.1. *Factors Affecting Strength*

The strength required for a given rigid pipe depends upon its size, the height, character, and weight of the fill over the culvert, the character of the foundation, the depth, and width of trench (if any) in which the pipe is installed, and the method of bedding and installation.

2.2. *Strength of Pipe*

The strength requirements for reinforced concrete pipe are given in Table 1. A more accurate determination may be obtained from Chart II (Fig. 1). The strength is expressed in "*D*" loads, i.e., the minimum ultimate loads per linear foot required to be sustained by the pipe divided by the nominal diameter of the pipe in feet. Both Table 1 and Chart II (Fig. 1) have been computed on the basis of a safety factor of 1.25. The strength of the pipe shall be measured by the 3-edge bearing method as specified in A.S.T.M. C-76. If required by the engineer, 3-edge bearing tests shall also be made as specified in A.S.T.M. C-76 to determine the strength of the pipe at the first $\frac{1}{100}$-inch crack. If so required, the $\frac{1}{100}$-inch crack load shall be used with a safety factor of 1, i.e., the required $\frac{1}{100}$-inch crack strengths shall be at least equal to the *D* values given in Table 1, divided by 1.25. Similarly, if Chart II (Fig. 1) is used, the *D* values given on the lines in the upper left corner of the chart may be divided by 1.25 and taken as the minimum permissible cracking loads. The pipe shall meet the requirements for both the ultimate and cracking tests or the cracking test may be substituted for the ultimate test as the engineer may direct.

Table 1 and Chart II have been computed for strengths of pipe up to 6000 *D*. For height of fill requiring greater strength, special designs shall be made.

2.2.1. *Explanation of Table 1*

"D Value." "*D* Value" is a term commonly used by pipe culvert designers to designate the strength measured by 3-edge bearing test per linear foot of pipe per foot of internal diameter. Thus, a 3000 *D* pipe of 2-foot diameter is able to support a 3-edge bearing load of 6000 pounds per linear foot of pipe.

Class of Bedding. The classes of bedding relate to six different methods used in installing the pipe. The methods are described in detail under "Installation." In outline, they are as follows:

Class A Bedding: The pipe is supported on a continuous concrete cradle.

TABLE 1
MINIMUM ALLOWABLE ULTIMATE D VALUE OF CONCRETE PIPE IN 1000-POUND UNITS FOR VARIOUS CLASSES OF BEDDING AND HEIGHTS OF OVERFILL. SAFETY FACTOR ASSUMED 1.25

All D values have been computed for a 60-inch pipe. In general they are accurate enough for any pipe size now in use except for the trench condition. Here the values given in the table are too large for smaller pipes and too small for larger sizes. For more accurate determinations use Chart II (Fig. 1).

H	Class A Bedding			Class B Bedding			Class B_1	Class C Bedding			Class C_1	Class D Bedding		
	$p = 0$	$p = 1$	Trench	$p = 0$	$p = 0.7$	Trench		$p = 0$	$p = 0.9$	Trench		$p = 0$	$p = 1$	Trench
10	1.0	1.0	1.0	1.1	1.1	1.1	—	1.3	1.3	1.3	—	2.0	2.1	2.0
15	1.0	1.1	1.0	1.5	1.7	1.5	—	1.8	2.1	1.8	—	2.7	3.3	2.7
20	1.2	1.6	1.2	1.8	2.3	1.8	1.2	2.2	2.8	2.2	1.4	3.4	4.6	3.4
25	1.5	1.9	1.4	2.2	2.8	2.1	1.4	2.6	3.5	2.5	1.7	4.1	5.8	3.9
30	1.8	2.3	1.6	2.6	3.4	2.3	1.6	3.1	4.2	2.8	2.0	5.0	—	4.4
35	2.1	2.7	1.7	3.1	4.0	2.5	1.8	3.7	4.9	3.0	2.3	5.8	—	4.7
40	2.4	3.1	1.8	3.6	4.5	2.7	2.1	4.3	5.6	3.2	2.5	—	—	5.1
45	2.7	3.5	1.9	4.1	5.1	2.9	2.4	4.8	—	3.4	2.8	—	—	5.3
50	3.0	3.9	2.0	4.5	5.7	3.0	2.6	5.4	—	3.5	3.1	—	—	5.6
60	3.6	4.7	2.2	5.5	—	3.2	3.1	—	—	3.7	3.6	—	—	6.0
70	4.2	5.5	2.3	—	—	3.3	3.6	—	—	3.9	4.2	—	—	—
80	4.8	—	2.3	—	—	3.4	4.1	—	—	4.0	4.7	—	—	—
90	5.4	—	2.4	—	—	3.5	4.6	—	—	4.1	5.3	—	—	—
100	6.0	—	2.4	—	—	3.5	5.1	—	—	4.1	5.8	—	—	—

Note: For depths of overfill less than 2 feet, where the nominal pipe diameter is less than 5 feet, add 50 percent to the D values given in the table for $H = 10$ to provide for live load and impact. Otherwise, for overfills less than 10 feet, use the D values given for $H = 10$.

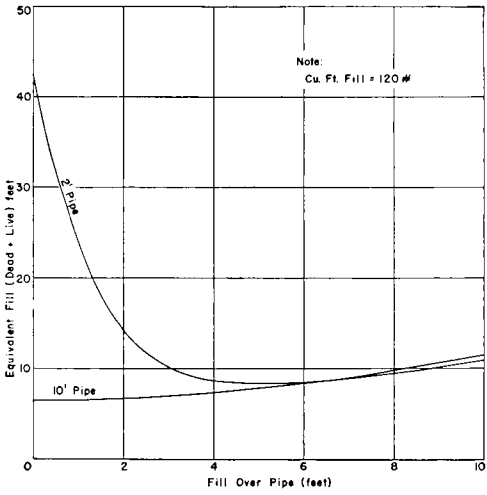

Figure 2

Class B Bedding: The pipe is bedded by the most careful methods, but no concrete cradle is used.

Class B_1 Bedding: The pipe is bedded as described under Class B and, in addition, the imperfect ditch method is used above it.

In specifying B_1 bedding, the stability of the pavement above the pipe must be considered and provided for by an adequate compacted cover of earth.

Class C Bedding: The pipe is installed with ordinary care.

Class C_1 Bedding: The pipe is bedded as described under Class C and, in addition, the imperfect ditch method is used above it. In specifying C_1 bedding, the stability of the pavement above the pipe must be considered and provided for by an adequate compacted cover of earth.

Class D Bedding: The pipe is installed without any great care in compacting the earth around it.

2.2.2. *Height of Fill*

The height of fill is given in the first vertical column on the left of the table. The heights are in feet measured from the top of the pipe.

2.2.3. *Projection Ratio*

The projection ratio is designated as p and is defined as the ratio of the distance of the original ground surface below the outside top of pipe to the outside diameter of pipe.

2.2.4

Class B and C Beddings require that p be 0.7 or less and 0.9 or less, respectively, so the table does not show values above these limits.

2.2.5

The columns marked "trench" assume that the pipe is installed wholly within a trench and that there is no fill over the natural ground surface. Where the sides of the trench are not vertical, its width shall be assumed as that at the level of the top of pipe. The trench is assumed to be 1.35 times the outside diameter of the pipe. Where the actual trench exceeds this width, the required D value may be obtained by multiplying the table value by the width of trench divided by 1.35 except that the required value shall not exceed the value for $p = 1$.

2.2.6

The settlement ratio is determined by an equation which involves the deflection of the conduit, the settlement of the flow line of the conduit, the settlement of the embankment subgrade adjacent to the conduit, and the deformation of the filling material adjacent to the conduit within the height which the conduit extends above the natural ground surface. The settlement ratio is designated by the symbol r_{sd}. The value $r_{sd} = 0.7$ has been assumed. For other values of r_{sd} and for more accurate results in general, Chart II (Fig. 1) should be used in place of Table 1.

2.2.7

Where the projection ratio, p, or the type of bedding shown in the table does not correspond with field conditions, interpolated values may be used. Thus, if the original ground surface is halfway between top of pipe and final ground elevation, the required D value may be taken as the average of $p = 0$ and "trench" columns.

2.2.8

Weight of earth has been assumed 120 pounds per cubic foot.

2.3.1. *Explanation of Chart II (Fig. 1)*

This is a combination of four diagrams.:

Upper right, giving the load factor, L_f in terms of the projection ratio, p, and the bedding class as defined in these specifications.

The load factor is defined as the ratio of the strength of a pipe under any stated condition of loading to its strength when tested in the 3-edge bearing test. The principal variables are the projection ratio and the class of bedding, although the size of pipe and fill height have some effect. The value of "q" representing the latter variables has been taken as 0.18.

Upper left, giving the safe uniform load W_c/B_c for a given strength of pipe and load factor.

Lower left, giving C_c in terms of W_c/B_c and B_c. These constants are taken from *Soil Engineering* by M. G. Spangler, page 422, formula (25-7) giving $W_c = C_c\, w\, B_c^2$, where w = weight of earth per cubic foot.

Lower right, giving the value of H/B_c in terms of C_c and $r_{sd}p$. The diagram was obtained by plotting values of equations (25-9) and (25-10) in Spangler's book, pages 422 and 423. As used here, C_c is a constant, H = allowable height of fill over the top of the culvert, B_c = outside diameter of culvert, p = projection ratio as defined above (Section 2.2.3), and r_{sd} = settlement ratio as defined above (Section 2.2.6). The following values for r_{sd} are suggested (See *Soil Engineering* by M. G. Spangler, page 422).

Rigid culvert on foundation of rock or unyielding soil + 1.0.

Rigid culvert on foundation of ordinary soil + 0.5 to 0.8.

Rigid culvert on foundation of material that yields with respect to adjacent ground + 0.0 to 0.5.

2.3.2.

The chart may be used to determine the necessary pipe strengths for the trench condition by using curve OT in the lower right hand diagram. The rest of the chart may be used as bedding conditions A, B, C, and D, except that wherever B_c is given, substitute B_d, the width of the trench. Also change the D values given in the upper left hand chart by the factor B_d/B_c.

2.3.3

For the B_1 and C_1 conditions assume $p = 1.0$. Ordinarily r_{sd} may be taken at -0.6.

2.34. *Minimum Height of Fill*

The minimum height of fill between the top of a rigid pipe culvert and the finished grade of the roadway shall be 1.75 feet for unpaved roads and those paved with a flexible type of pavement. For roads paved with Portland cement concrete, the minimum height of fill shall be 1.25 feet.

INSTALLATION

3.1. *Construction Machinery*

Movement of construction machinery over a culvert shall be at the contractor's risk. Any pipe injured thereby shall be repaired or replaced at the option of the engineer and at the expense of the contractor.

3.2. *Temporary Stream Flow*

The contractor shall provide, as may be necessary, for the temporary diversion of water in order to permit the installation of the culvert in the dry.

3.3. *Fill Material*

Fill material within a nominal pipe diameter distance at the sides of the culvert and one foot over the top shall be of soil which can be readily compacted. It shall not contain stones which will be retained on a 3-inch ring, frozen lumps, chunks of highly plastic clay, or any other material which is objectionable in the opinion of the engineer. Attention is directed to possible exceptions to this requirement in classes B_1 and C_1 beddings (see paragraphs 3.9.3 and 3.9.5).

3.4. *Camber*

The invert grade of culvert shall be cambered by an amount sufficient to prevent the development of a sag or back slope in the flow line as the foundation soil settles under the weight of the embankment. The amount of camber shall be determined by the engineer, based upon consideration of the flow line gradient, the height of fill, the compressive characteristics of the supporting soil, and the depth of the supporting soil stratum to ledge rock. In no case shall the camber be sufficient to produce an adverse grade after settlement has occurred.

3.5. *Laying Pipe*

Pipe laying shall begin at the downstream end of the culvert with the bell or groove end of the first pipe section upstream. When bell and spigot pipes are used, bell holes shall be dug in the pipe subgrade to accommodate the bells. They shall be deep enough to insure that the bell does not bear on the bottom of the hold and they shall not be excessively wide in the longitudinal direction of the culvert. When the pipes are laid, the barrel of each pipe shall be in contact with the quadrant shaped bedding throughout its full length, exclusive of the bell.

3.5.1

When elliptical pipe with circular reinforcement or circular pipe with elliptical reinforcement is used, the pipe shall be installed in such a position that the manufacturer's marks designating the "top" or "bottom" of the pipe shall be not more than 5° from the vertical plane through the longitudinal axis of the pipe.

3.5.2. *Multiple Pipe Culverts*

Where multiple lines of pipe are used, they shall be spaced far enough apart to permit thorough tamping of the earth between the pipe. To this end, the adjacent sides of the pipe shall be at least half the nominal pipe diameter apart or 3 feet, whichever is less.

3.6. *Jointing Pipe*

Pipe joint design may be of the bell and spigot type or the tongue and groove type unless one type is specified by the engineer.

3.6.1

Joints shall be made with (a) Portland cement mortar, (b) Portland cement grout, (c) rubber gaskets, (d) oakum, or (e) a combination of these materials unless one type or combination is specified by the engineer.

3.6.1a. *Mortar Joints*

The mixture shall be one part Portland cement and two parts sand by volume. The quantity of water in the mixture shall be sufficient to produce a stiff, workable mortar but shall in no case exceed 5½ gallons of water per sack of cement. The sand shall conform to the Specification M45-42 and the cement shall conform to Specification M85-53 of the American Association of State Highway Officials.

If ordered by the engineer, air-entraining Portland cement conforming to Specification A.A.S.H.O. M-134-53 or an admixture conforming to A.A.S.H.O. M-149-54 shall be used.

The pipe ends shall be thoroughly cleaned and wetted with water before the joint is made. Stiff mortar shall then be placed in the lower half of the bell or groove of the pipe section already laid. Next, mortar shall be applied to the upper half of the spigot or tongue of the pipe section being laid. Then the spigot or tongue end of this pipe shall be inserted in the bell or groove end of the pipe already laid, the joint pulled up tight, taking care to see that the inner surfaces of the abutting pipe sections are flush and even.

3.6.1b. *Grout Joints*

The grout shall consist of Portland cement conforming to M85-53 of the American Association of State Highway Officials mixed to the proper consistency with not more than 5 gallons of water per sack of cement.

The grout shall be poured or pumped into the joint space and retained by molds or runners around the pipe in a manner acceptable to the engineer.

3.6.1c. *Rubber Gasket Joints—Tongue and Groove Pipe*

Rubber Gaskets—The gasket shall be a continuous rubber ring which fits snugly in the annular space between the beveled surface of the tongue and the groove ends of the pipes to form a flexible water-tight seal under all conditions of service. The gaskets shall have smooth surfaces free from all imperfections. The gaskets shall meet the physical test requirements specified in "Methods of Physical Test and Chemical Analysis for Rubber Goods" [Federal Specification ZZ-R-601a(1)]. Tensile strength shall be at least 2300 psi. Elongation at rupture shall be such that 2-inch gage marks will stretch at least 10 inches. Hardness shall be between 40 and 65 as measured with a Shore Durometer. Permanent set shall not exceed 20 percent of original gage length.

3.6.1d. *Oakum Joint—Bell and Spigot Pipe*

Exterior Seal—The bell and spigot pipe shall be calked with oakum and sealed with a hot poured joint compound. Oakum shall be made from hemp (Cannabis Sativa) line, or Benares Sunn Fiber, or from a combination of these fibers. The oakum shall be thoroughly corded and finished and practically free from lumps, dirt, and extraneous matter. The fibers shall be thoroughly impregnated with hot asphaltic cement. The sealer shall be Atlas JC-60 hot poured sewer joint compound or the approved equivalent.

3.7. *Finishing*

After the joint is made, the inside surface of the pipe and the annular space between the ends of the pipe shall be cleaned. The joint shall then be filled with mortar, and finished smooth and even with the inside surface of the pipe. For pipes 30 inches or less in diameter, the filling of the joints shall be done before the grout or mortar in the joints has set. For pipes over 30 inches in diameter, this operation shall be postponed until the earth fill has been completed. It will probably be necessary to reclean the joints before applying the mortar.

3.8. *Rock or Other Incompressible Foundation*

Where ledge rock, rocky, or gravelly soil, hard pan, or other unyielding foundation material is encountered at a culvert site, the pipe shall be bedded in accordance with the requirements of one of the classes of bedding, but with the following additions: The hard unyielding material shall be excavated below the elevation of the bottom of the concrete cradle (Class A bedding) or the bottom of the pipe or pipe bell (Class B, B_1, C, and C_1 beddings) for a depth of at least 12 inches or ½ inch for each foot of fill over the top of the pipe, whichever is greater, but not more than ¾ the nominal diameter of the pipe. For Class D bedding, the depth shall be 8 inches. The width of the excavation shall be one foot greater than the outside diameter of the pipe and shall be refilled with selected fine compressible material such as silty clay or loam and lightly compacted and shaped as required for the specified class of bedding. A typical Class B bedding on rock foundation is illustrated in Figure 3.

3.9. *Methods of Bedding*

The contact between a culvert pipe and the foundation on which it rests is the pipe bedding. It has an important influence on the supporting strength of the pipe. The class of bedding to be employed shall be determined by the engineer and specified on the plans. Six classes of pipe beddings are as follows:

3.9.1. *Class A—Concrete Cradle Bedding*

In this class of bedding, the lower part of the pipe exterior shall be bedded in a continuous cradle constructed of 2000-pound concrete or better, having a minimum thickness under the pipe of one-fourth the nominal inside diameter and extending up the sides of the pipe for a height equal to one-fourth of the outside diameter. The cradle shall have a width at least equal to the outside diameter of the barrel of the pipe plus 8 inches and it shall be constructed monolithically without horizontal construction joints. A typical Class A bedding is illustrated in Figure 4.

3.9.2. *Class B Bedding*

This class of bedding is applicable only when the projection ratio is not greater than 0.7. The pipe shall be carefully bedded on fine granular materials over an earth foundation, accurately shaped by means of a template to fit the lower part of the pipe exterior for at least 15 percent of its overall height. Compactible soil material shall then be rammed and tamped in layers not more than 6 inches thick, around the pipe for the remainder of the lower 30 percent of its height. Backfilling to the top of the pipe shall then be completed as specified under "Backfilling." A typical Class B bedding is illustrated in Figure 5.

3.9.3. *Class B_1 Bedding*

In this type of installation, sometimes called the imperfect ditch method, the pipe culvert shall first be installed in accordance with the requirements of Class B bedding. Then the fill shall be compacted at each side of the pipe for a lateral distance equal to twice the outside diameter or 12 feet, whichever is less, and carried up to an elevation equal to the outside diameter of the pipe plus 1 foot, above the top of the pipe. Next, a trench equal in width to the outside diameter of the pipe shall be dug

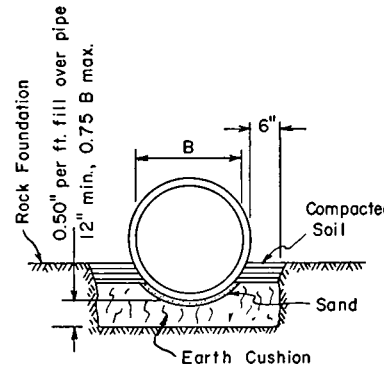

CLASS B
ON
ROCK FOUNDATION

Figure 3

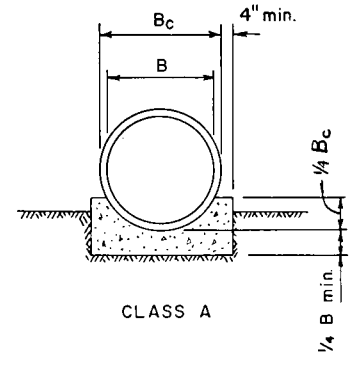

CLASS A

Figure 4

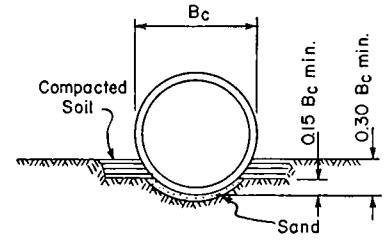

CLASS B

Figure 5

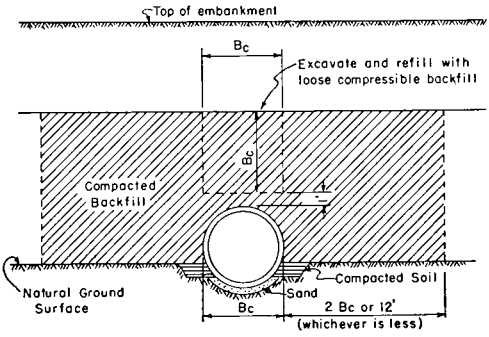

CLASS B_1

Figure 6

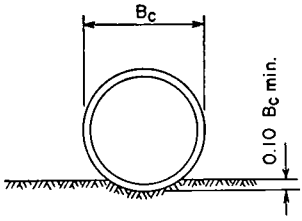

CLASS C

Figure 7

in the fill directly over the culvert, down to an elevation 1 foot above the top of the pipe. Care shall be exercised to keep the sides of this trench as nearly vertical as possible. After the trench is excavated, it shall be refilled with loose, highly compressible soil material. Straw, hay, cornstalks, leaves, brush, or sawdust may be used to fill the lower one-fourth to one-third of the trench in order to insure high compressibility of this backfill. After the backfill is completed, the balance of the fill shall be constructed by normal methods up to the finished grade of embankment. Typical Class B_1 bedding installation is illustrated in Figure 6.

3.9.4. *Class C Bedding*

In this class of bedding, the pipe shall be bedded with "ordinary" care in a soil foundation shaped to fit the lower part of the pipe exterior with reasonable closeness for at least 10 percent of its overall height. The remainder of pipe shall be surrounded by material placed by hand tools to fill completely all spaces under and adjacent to the pipe. Backfilling to the top of the pipe shall then be completed as specified under "Backfilling." A typical Class C bedding is illustrated in Figure 7.

3.9.5. *Class C_1 Bedding*

The pipe shall first be installed in accordance with Class C bedding. The imperfect ditch method shall then be used as described under Class B_1 bedding.

3.9.6. *Class D Bedding*

In this class of bedding, no special care is required in shaping the bed or backfilling except the fill must be in contact with the pipe at all points and shall be constructed by methods as prescribed for other road embankments.

3.10. *Backfilling*

Backfilling material in a trench and up to the elevation of the top of the pipe shall be selected fine compactible soil material. It shall be compacted at near optimum moisture content, in layers not exceeding 6 inches in compacted thickness, by hand, pneumatic tampers, or other means approved by the engineer. Care shall be exercised to thoroughly compact the backfill under the haunches of the pipe and to insure that the backfill soil is in intimate contact with the side of the pipe. The backfill shall be brought up evenly on both sides of the pipe for its full length. When the pipe is not installed in a trench, the backfill soil shall be compacted for a width on each side of the pipe equal to two times its outside diameter, or 12 feet, whichever is less. Special compaction specified in this paragraph will not be required for *D* bedding. Backfill at the sides of the pipe may be compacted by rolling or operating heavy equipment longitudinally parallel with the culvert, provided care is taken to avoid displacement or injury of the pipe. All damage to the pipe shall be repaired by the contractor at his own expense, at the option of the engineer and to his satisfaction.

In all backfilling operations, care shall be exercised and it shall be the contractor's responsibility to see that the pipes are not damaged by the lateral forces imposed during compaction of the backfill; especially in the case of circular pipe with elliptical reinforcement or elliptical pipe with circular reinforcement, it may be necessary to install timber struts at the horizontal diameter of the pipe sections, to be left in place until the fill over the pipe is completed.

DISCUSSION

C. M. Adams, *Assistant Chief Engineer, American Pipe and Construction Company*—Mr. Babcock has prepared in Table 1 a relation between the ultimate *D*-load of pipe and the height of fill up to 100 feet for all diameters, six classes of bedding, and has provided for two types of a projected condition. The loads imposed by a positive projected condition rapidly become astronomical with an increasing fill, and we fail to see the necessity of de-

signing for a projected condition throughout the full range of fill. It has proved economical in many areas to compact and prepare the fill, cut the trench for the pipe, lay the pipe, and backfill (Types A and B methods in California). Where heavy construction equipment is used, such a procedure is almost mandatory to provide a maximum length of working room in the fill area. This method of laying pipe in a trench can easily be spelled out in the specifications and should be required for the greater heights of fill. We do not see why concrete pipe should be forced to accept more than its fair share of the cost of a satisfactory installation. It can easily be argued that the designer can specify either a trench condition or a projected condition from the table as it now stands. However, it has been our experience that the maximum strength pipe shown on the chart will frequently be specified regardless of bedding conditions or design assumptions. We therefore would suggest that the basic chart or table recommended be based on a trench condition, an imperfect trench condition or a negative projecting conduit condition. If in the last analysis it seems desirable to include a positive projection alternate then it can be placed in a second table with an explanatory note regarding the construction practices necessitating its use.

It is the standard practice and has been for many years, particularly throughout the West, to specify pipe on a 3-edge bearing plant test to the 0.01-inch crack. In this area this procedure has been highly satisfactory and we believe it is better that the basic table be prepared on this basis rather than by specifying ultimate loads. Mr. Babcock has provided for this practice by using a ratio of 1.25 between the ultimate D-load shown and the required cracking D-loads. Actually, however, this ratio may be anything from 1.50 to nearly 1, depending upon many factors such as the class of pipe, the strength of the concrete, the diameter of the pipe, the wall thickness, the steel pattern and the distribution of steel. By setting an arbitrary ratio of 1.25, it is entirely possible that manufacturers meeting the ultimate test could provide pipe with less steel than manufacturers meeting a cracking test. Stated another way, for many installations a pipe produced on 0.01-inch crack basis provides a higher safety factor than one produced on an ultimate basis. The industry being in the status that it is with several sections of the country using a cracking D-load as a criterion and other sections of the country using the ultimate load capacity of the pipe as a criterion, it is very important that more information be obtained upon this ratio for some of the conditions mentioned above. If a test program is adopted, this particular field should be one of the first to be explored.

A testing program is certainly highly desirable but at the same time it must be realized that full scale field testing is most expensive. To obtain the information needed, the program should cover not only variable bedding conditions and variable heights of fill but also various diameters of pipe. The procedure should include the use of strain gages as well as the measurement of pipe deformations. Three-edge bearing tests to the 0.01-inch crack and ultimate tests should be made on the same class of pipe as actually used for the field test.

Paragraph 2.2 does not include the actual number of plant tests required to determine the acceptability of pipe.

There is considerable confusion in the industry today regarding the meaning of the "D-load." It is therefore suggested that D-loads to the ultimate be identified as "D_u" and D-loads to the 0.01-inch crack be identified as "$D_{.01}$".

It must be recognized by the Bureau of Public Roads that 6000-D pipe is a non-standard product, difficult to produce and requires thicker walls with a special steel pattern. As there is no diameter limitation to Table 1, it would be easy for an unwary designer to specify pipe not only unavailable locally but a pipe which could be produced only at an exorbitant cost.

Many manufacturers produce a rubber gasketed pressure pipe not based on a tongue and groove type of joint but rather on a bell and spigot type of joint in which a groove is formed in the spigot end which after assembly retains a round "O" ring type of gasket. The seal in such a pipe can be designed for culvert use in the same manner as a pipe with a tongue and groove joint and in some areas may be the only type of rubber gasketed pipe available. Therefore, it is suggested that Para. 3.6.1 (c) be revised to include this alternate.

E. F. BESPALOW, *Vice-President and Chief Engineer, Choctaw, Inc.*—The author of this paper is to be highly complimented on the preparation of a very clear and concise explanation of a rather difficult, involved, and highly technical subject. I believe that this paper will have far-reaching effects. In the past, many engineers have hesitated to use the Marston theory in the design of pipe culverts because it was highly involved in mathematical determination; now one may anticipate that the simple table and charts prepared by the author of this paper will encourage more design of pipe culverts for the specific conditions under which they are to be installed, thus providing greater economy and safety. I am especially pleased to note that the author has taken into account pressures in the side prisms since these pressures definitely cannot be ignored and the lateral restraining forces decrease the load effect on the pipe; however, I do feel that specific research on this particular subject is needed to determine a more accurate value for the lateral restraining force.

The author states that "it was soon found that the size of pipe had comparatively little effect on the D value required except where the pipe is installed in a trench." I would like to re-emphasize this statement because in a trench condition the width of trench has a considerable influence on the D value required for the same depth of trench. Different diameters of pipe placed in the same width trench would also require different D values.

It should also be noted that small diameter pipe has a considerably greater load carrying capacity than large diameter pipe because the ratio of wall thickness to internal diameter is substantially greater on small pipe than on large.

I do not agree with the statement that in concrete pipe, the smaller the diameter the greater minimum cover is required to protect it from concentrated loads. Theoretically this may be true, but practically, where the contact area of the concentrated load is greater than the diameter of the pipe, a considerable part of the load does not come upon the pipe. This fact was borne out in tests conducted in Memphis, Tennessee, to determine minimum covers. However, the minimum covers recommended in the author's paper are satisfactory and not out of line with current practice.

The matter of joints in pipe, we believe, can be clarified and possibly simplified. Four types of joints are listed—mortar, grout, rubber gasket, and oakum. I feel that three types of joints basically would be more practical—that is, cement mortar joints, the jointing compound joints, and rubber gasket joints, there being two basic types of mortar joints, either the plastic mortar joint or the wet-poured mortar joint. In the joining compound joint, there are both the cold mix, mastic type of asphalts or compounds, as well as the hot poured asphalt or compound type of joint, and on all bell and spigot pipe, whether used with the mortar joint or compound type joint, oakum should be used in order to space the spigot end properly in the bell of the pipe to give a smooth flow line. Under the rubber gasket joint, I believe the specifications should include a clause about the tolerance and the annular space to be governed by the rubber manufacturer's specifications on the particular type of rubber gasket used.

In conclusion, I would like to repeat that this paper will prove to be a great boon to the highway culvert designer as well as to the manufacturers of concrete pipe, and the author deserves the everlasting thanks of the highway industry.

M. G. SPANGLER, *Research Professor of Civil Engineering, Iowa State College, Ames, Iowa.*—Mr. Babcock's paper contains a very thorough and accurate interpretation of the Marston theory of loads on underground conduits. Also, the specification for "Design and Installation Criteria for Reinforced Concrete Pipe Culverts," which constitutes an appendix to the paper, represents a marked advance in the art of pipe culvert construction and should prove valuable in future highway construction.

There are, however, some features of the application of the load theory to actual design and construction which the writer believes can and should be improved. First with respect to the criterion of failure which is used as a basis for design, Mr. Babcock's paper permits the use of the ultimate test strength of the pipe with a factor of safety of 1.25. This means that the pipe, as installed, may be loaded up to 80 percent of its ultimate load carrying capacity.

The performance of reinforced concrete pipe varies widely with respect to the relationship between the $\frac{1}{100}$-inch cracking load and the ultimate strength. The ratio of these two loads

may range from about 50 percent to 90 percent, depending upon the design of reinforcement and other details of pipe manufacture. Probably the average ratio for the bulk of pipes being manufactured today falls in the neighborhood of 60 to 65 percent. If pipes having ratios of 1/100-inch crack load to an ultimate of less than 80 percent are installed under this provision of Mr. Babcock's specification, it is reasonably certain that many of them will develop cracks wider than 1/100 inch and some may proceed toward failure to the extent of developing very wide cracks, shear failure, or "slabbing," in which the protective cover breaks off and bares the reinforcement to the elements. Such designs would not be satisfactory.

The second feature of the specification with which the writer does not agree is the provision by which it is necessary to determine in advance the value of a projection ratio for each pipe culvert installation and to interpolate required strengths from two of several columns in Table 1 of the specification. A pipe culvert is a relatively small structure and a relatively minor item of a highway project. Conversations with highway designers, both in state highway departments and in turnpike authorities, lead to the belief that it will be difficult to carry out such a detailed procedure with respect to the design of an individual pipe culvert. It is suggested that a more workable procedure would be to establish several (not to exceed four) types of installation conditions which can readily be created in the field by contractors, using modern soil compaction and excavation equipment. The type of installation appropriate for each culvert could readily be decided upon during field examination prior to final design of a road, then the proper strength of pipe selected directly from a table, based upon the type of installation, the height of fill, and the required class of bedding. Such a procedure would not require the determination of a projection ratio nor any interpolation to arrive at a satisfactory pipe strength.

This general procedure has been followed by the California Division of Highways for a number of years with conspicuous success, under the leadership of Mr. R. Robinson Rowe (*1*). California has been a leader in the application of scientific principles of design of concrete pipe culverts. They have many outstanding examples of pipe culverts under high fills which were installed by their "Method B" (see p. 86, 87 of reference (*1*)), which is similar to Type III, below.

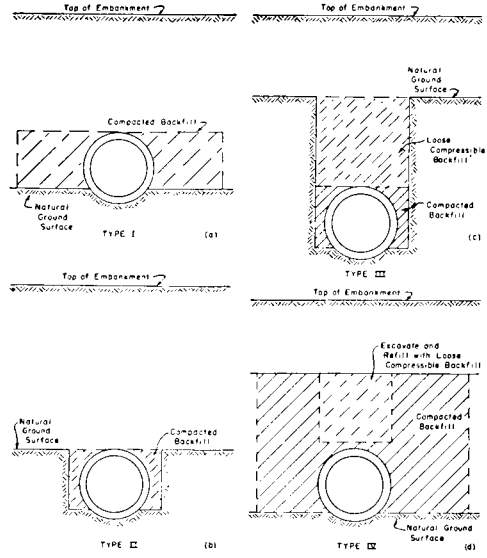

Figure 1

Four recommended types of installation are described and illustrated in both the following paragraphs and Figure 1. The required 1/100-inch crack *D*-load strength for various classes of bedding and various heights of fill are given in Table 1. The definitions of bedding classes A, B, and C in this table are the same as those described in paragraphs 3.9.1, 3.9.2, and 3.9.4 of Mr. Babcock's specification.

TYPES OF INSTALLATION

Pipe culverts may be constructed under one of several types of installation conditions which influence the earth load on the pipe. The type of installation shall be selected by the engineer and specified on the road plans. Four types of installation are as follows:

Type I. Positive Projecting Conduits

In this type of installation, the pipe culvert shall be installed on the natural ground surface or the surface of thoroughly compacted soil, with the top of the pipe at some elevation above the adjacent surface. A typical Type I installation is illustrated in Figure 1*a*.

TABLE 1A
THREE-EDGE BEARING 1/100 IN. CRACK *D*-LOAD STRENGTHS OF CULVERT PIPES FOR VARIOUS HEIGHTS OF FILL, TYPES OF INSTALLATION AND CLASSES OF BEDDING

Height of Fill	Type I			Type II			Type III			Type IV			Height of Fill
	Class A	Class B	Class C	Class A	Class B	Class C	Class A	Class B	Class C	Class A	Class B	Class C	
ft.													*ft.*
10	490	485	1035	405	640	770	390	620	750	200	445	555	10
15	805	1325	1640	615	960	1160	540	840	1035	230	555	695	15
20	1120	1810	2275	820	1285	1550	690	1060	1320	260	660	835	20
25	1410	2305	2800	1030	1610	1935	845	1285	1600	325	820	1040	25
30	1700	2800	3420	1235	1930	2320	1000	1510	1830	390	980	1240	30
35	1970	3280	3980	1440	2250	2710	1135	1755	2150	445	1120	1420	35
40	2240	3760	4540	1645	2570	3100	1270	2000	2420	500	1260	1595	40
45				1850	2890	3485	1415	2230	2700	560	1410	1785	45
50				2060	3210	3870	1560	2460	2980	620	1560	1975	50
60				2475	3850	4640	1865	2960	3580	730	1845	2340	60
70							2155	3290	4100	845	2135	2710	70
80							2480	3750	4650	960	2430	3160	80
90										1075	2720	3450	90
100										1190	3010	3820	100

Type II. Zero Projecting Conduits

In this type of installation, the pipe culvert shall be installed in a narrow and shallow trench with the top of the pipe at approximately the same elevation as the adjacent natural ground surface or the surface of thoroughly compacted soil. A typical Type II installation is illustrated in Figure 2*b*.

Type III. Negative Projecting Conduits

In this type of installation, the pipe culvert shall be installed in a narrow trench of sufficient depth that the top of the pipe is below the natural ground surface or the surface of thoroughly compacted soil, a vertical distance approximately equal to the width of the trench. Then the trench above the elevation of the top of the pipe shall be refilled with loose, highly compressible soil. A typical Type III installation is illustrated in Figure 1*c*.

Type IV. Imperfect Ditch Conduit

In this type of installation, the pipe culvert shall first be installed in accordance with the requirements of Type I. Then the fill shall be compacted at each side of the pipe for a lateral distance equal to twice the outside diameter and carried up to an elevation equal to the outside diameter of the pipe plus 1 foot, above the top of the pipe. Next, a trench equal in width to the outside diameter of the pipe shall be dug in the fill directly over the culvert, down to an elevation 1 foot above the top of the pipe. Care shall be exercised to keep the sides of this trench as nearly vertical as possible. After the trench is excavated, it shall be re-filled with loose, highly compressible soil material. Straw, hay, cornstalks, leaves or brush may be used to fill the lower one-fourth to one-third of the trench in order to insure high compressibility of this backfill. After the backfill is completed, the balance of the fill shall be constructed by normal methods up to the finished grade of the embankment. A typical Type IV installation is illustrated in Figure 1*d*.

Another feature of Mr. Babcock's specification with which the writer is in disagreement is the manner of inclusion of the Imperfect Ditch Method of construction. This is an extremely important construction procedure which greatly reduces the load on a culvert under a high fill, as compared with the load caused by the same height of fill when the pipe is installed by more conventional methods. As highway designs improve in quality and sight distances become greater, the height of embankments will increase, and this special method of construction will undoubtedly be more widely used. It deserves to be emphasized in the specification rather than be submerged by simply including it as another class of bedding. Actually the Imperfect Ditch Method is not a method of bedding at all. It is a special construction procedure by which a considerable proportion of the weight of the prism of soil directly over a pipe is transferred by arch action to the soil at the sides, thus reducing the load on the pipe. Both experi-

mental research and observation of the performance of actual pipe culverts have demonstrated the value of this method of construction as a load reducer.

REFERENCE

1. *California Culvert Practice*, 2nd Ed., Division of Highways, State of California, 1955.

R. E. Bald, *Asst. Chemical Engineer, Lock Joint Pipe Company, East Orange, New Jersey* —This paper offers confirmation on a national basis that reinforced concrete culvert pipe can be satisfactorily used under high embankments when properly installed. It makes available to the engineer responsible for many or all phases of highway design a simplified method of determining the strength of culvert pipe required for most installation conditions.

Table 1 is certainly a neat package considering all the variables involved in arriving at the design of culvert pipe for various heights of cover. The writer agrees with the author that such a table is useful in making comparative estimates of the various methods of installing culvert pipe. This should be its primary purpose. Once the method of installation has been established, the required pipe strength should be determined more accurately by the use of Chart II or by complete computations using Spangler's chart for C_c.

Paragraph 2.2 of the Appendix suggests that the pipe be accepted on the basis of ultimate strength determined by the 3-edge bearing method. However, it permits the engineer the alternatives of requiring the pipe to meet both the ultimate and 0.01-inch crack strength or merely the 0.01-inch crack test without destruction of the pipe. Since a factor of 1.25 has been used in Table 1 and Chart II for the ratio between 0.01 inch crack load and ultimate load, it will be generally true that a higher strength pipe will have to be supplied when the 0.01-inch crack strength must be met than when only the ultimate strength must be met. Similarly, an engineer requiring only an ultimate strength test and basing his design on Chart II must expect the possibility of cracks in some pipe in the installed culvert exceeding 0.01 inch if the conditions of installation conform to his design assumptions in all respects. This is true because it is impossible to consistently produce pipe by the various methods of manufacture that will have a 0.01-inch crack strength equal to 80 percent of the ultimate strength.

While the writer believes that engineers using Table I and Chart II should be aware of this possibility, he does not feel that the factor of safety need be increased as long as the conditions of installation are known with reasonable accuracy at the time of design. Since the design will be based on the minimum required strength of pipe, many or all pieces in a culvert will have strengths greater than the minimum. Furthermore, there is likely to be a tendency on the part of the design engineer to choose the various factors in Marston's formulas conservatively when he is uncertain of the conditions of installation.

It must also be realized that a factor of safety of 1.25 between design load and ultimate load in 3-edge bearing will result in a much higher factor of safety in the actual embankment installation. This, of course, is due to the side support developed as the pipe deflects. It is quite unlikely that this side support will ever be disturbed. Therefore, it becomes a significant factor in evaluating the condition of a culvert with cracks exceeding 0.01 inch in width. Although 0.01-inch crack is the normally accepted maximum design condition for sewers and culverts, cracks exceeding 0.01 inch in culverts should not be considered indicative of failure.

On Chart II in the upper right hand section, the curve for Class C bedding should be discontinued at $p = 0.9$ and the curve for Class B bedding at $p = 0.7$. Also, the example should be changed so that the height of fill is given and the strength of pipe is to be determined. This will be the more general case with which engineers will be confronted.

In Paragraph 2.2.5 the last sentence should read "Where the actual trench exceeds this width, the required D value may be obtained by multiplying the table value by the square of the width of trench divided by $1.35B_c$ squared except that the required value shall not exceed the value for $p = 1$ inch. Since Marston's formula is $W = C_d w \bar{B}_d^2$, this will be more correct than the present statement. It does not, however, correct for the lower value of C_d due to the reduced H/B_d ratio for a wider trench. Consequently, for H/B_d ratios of less than 10 the Chart should be used rather

than the Table when the trench width is other than $1.35B_c$.

In Paragraph 3.6.1 the physical requirements for the rubber gaskets seem unnecessarily high for sewer and culvert pipe. The requirements listed are actually those for pressure pipe. For the application involved, a lower limit on tensile strength of 1200 psi and a minimum ultimate elongation of 200 percent with a permanent set of 16 percent or preferably a compression set by constant deflection of 30 percent would be entirely satisfactory.

In his concluding remarks the author proposes that a series of test pipelines be installed under actual embankments with varying conditions in order to obtain needed information. The writer agrees that a test program could be of considerable benefit. Such a program to be of maximum usefulness should be a joint effort involving the Bureau of Roads and the American Concrete Pipe Association. Some preliminary information could be obtained by the use of a questionnaire sent to the various state highway departments asking their experience with various methods of installation. Once all available information had been compiled, the conditions for the experimental installations should be carefully chosen to provide the maximum amount of information for the least expenditure.

JOHN G. HENDRICKSON, JR., *Research Engineer, American Concrete Pipe Association, Chicago, Illinois*—To anyone who has spent much time in computing loads and required pipe strengths for culverts, it is obvious that Mr. Babcock and Professor Spangler have spent considerable effort in developing a more simplified procedure. The time which can be saved from routine calculations through the use of tables or charts such as those presented should make this paper very valuable to drainage engineers. Any effort to simplify a complicated subject tends to obscure the effect of certain variables. Therefore, to avoid using such charts and tables erroneously, one should be familiar with the Iowa State Theories. The chart and table are not a sustitute for knowledge of these theories.

This paper deals almost entirely with the projecting embankment type of installation, where the pipe is located above the natural ground surface and the fill built up over it. Some brief mention is made of pipes installed in trenches and Table I contains information on trench installations which can be used within the limitations stated by the author. However, the writer disagrees with the author's statement that Chart II with curve *OT* can be used for trench conduits, although it can easily be modified for such use. Load factors for trench conduits differ from those for projecting embankment conduits. Therefore, the curves in the upper right hand quadrant of Chart II cannot be used for trench conduits. Trench conduit load factors are constant for each type of bedding and are generally taken as 1.1 for Class D, 1.5 for Class C, 1.9 for Class B and 3.0 for Class A Bedding. Also the load curves in the upper left quadrant of Chart II are for loads proportional to the outside diameter of the pipe. Loads on trench conduits are proportional to trench widths. Therefore, a new set of curves would have to be drawn for trench conduits. The curves in the lower left quadrant can be used for either projecting or trench conduits as can the ratio H/B_c if curve *OT* is used. B_c then becomes the trench width in each case.

In referring to pipe strengths, this paper uses the term *D*-load which may be new to some engineers. As Mr. Babcock points out, this is the test load per linear foot of pipe per foot of diameter. It is a convenient means of classifying pipe according to strength. Unfortunately, local custom varies as to just what test load is meant. In some areas, *D*-load denotes the ultimate strength of the pipe in a 3-edge bearing test. On the West Coast, however, the *D*-load strength of the pipe generally has been used to denote the 0.01-inch crack strength of a pipe in the 3-edge bearing. The present trend seems to be to use *D*-load in referring to ultimate strength as Mr. Babcock has done in his paper. To avoid confusion, however, it may be well to specify the type of *D*-load being considered.

This paper provides for the use of concrete pipe culverts under embankments with fill heights up to 100 feet. It is shown that the imperfect trench method of construction will permit the construction of these fills without requiring unusually high strength concrete pipe. Experience with this method of installation perhaps has not been as widespread as with the more common methods. Therefore, it is of interest to note that in addition to the research data from Iowa State College, there

are numerous actual installations which confirm the fact that the method is correct in theory and practical in its field application. A number of these are described in ASCE Proceedings Paper 823, "Rigid Culverts Under High Overfills," by R. Robinson Rowe, Bridge Research Engineer of the California State Highway Department.

With the modifications suggested, Chart II is a valuable contribution to drainage engineers for the design of culverts. The chart can be used either wholly or in part to solve a variety of problems. Therefore, it is a much more versatile tool than might be inferred from the single example given. Most culvert problems require the determination of the strength of pipe needed for a given set of installation conditions. Therefore, it might be helpful if a second example were provided or the present one altered to illustrate this use of the chart.

Table I and Chart II were developed using a factor of safety of 1.25 applied to the ultimate strength of the pipe in a 3-edge bearing test. The paper also points out that the 0.01-inch crack strength of the pipe in 3-edge bearing may be used where preferred. For pipe made in accordance with ASTM Specifications, the use of the 0.01-inch crack strength could be expected to provide a factor of safety on the ultimate strength of about 1.5. Therefore. engineers who use Table I or Chart II should realize that cracks greater than 0.01-inches in width may form.

The writer would prefer to continue with the more conservative value of factor of safety of 1.5. It is recognized that the factor of safety against collapse increases considerably in the field due to the development of lateral pressure against the sides of the pipe. It is also the writer's belief based on experience and past observations that the formation of cracks 0.01-inches or slightly over in width are not damaging. However, it is also the feeling of the writer that many times culverts do not receive the attention either in design or construction commensurate with their value to the project. The earth pressures developed by the high fills covered in this paper can become enormous. Incorrect assumptions in design which are not conservative, mistakes in construction, and other unexpected happenings can subject the pipe to extreme overload for which expensive replacement or repairs may be needed. For these reasons the writer would prefer to have a greater reserve strength in the pipe than is provided by the 1.25 factor of safety.

The writer is in full accord with further research on this subject as proposed by the author. The very valuable research at Iowa State College was carried on mainly before the development of present day construction methods and equipment. It seems only logical, therefore, that an effort be made to develop information which is perhaps more applicable to present day practice.

D. N. Brown, *Engineer, Reports and Special Projects Section, Waterways Experiment Station, Corps of Engineers, Vicksburg, Mississippi*—Mr. Babcock is to be congratulated on a very fine paper on an important subject which has been neglected far too long. He has presented what appears to be a good, simplified design method for reinforced concrete pipe subjected to dead- and live-load stresses. Many a long, tedious hour of computations can be saved through use of Table 1 and Chart II. Table 1 and Chart II should prove invaluable in instances where comparable cost estimates for different pipe strengths are required in a relatively short time.

There are many unknowns relative to the distribution of stresses on pipes in soil masses. For this reason, a number of simplifying assumptions are included in the theory used to determine permissible depth of cover over buried pipes. The validity of these assumptions must be verified to establish the applicability of the theory to actual conditions. Since field test results needed to establish the applicability of the theory to actual conditions are meager, results developed on the basis of theory must be used with judgment.

Even if a proved method of design for reinforced pipe subjected to dead- and live-load stresses were available, we would still be faced with the problem of proper installation of the pipe according to plans and specifications. It appears probable that poor workmanship and inadequate inspection are the cause of many pipe failures and that all possible means should be used to insure good workmanship and close construction control during the construction of pipe installations.

A few comments appear pertinent, after which a method for the design of rigid pipes subjected to dead- and live-load stresses, dif-

fering somewhat from the methods used by Mr. Babcock, will be presented.

Specific comments referring to particular parts of Mr. Babcock's paper follow:

A. *Simplifications*

1. A discussion of the derivation of the equation for load factor might be of interest to readers not acquainted with Professor Spangler's work. This equation follows:

$$L_f = \frac{1.431}{N - xq}$$

where

$$q = \frac{pk}{C_c}\left(\frac{H}{B_c} + \frac{p}{2}\right)$$

In the equation for ratio of horizontal pressure to vertical pressure (q) p is the projection ratio and is equal to the distance from the top of a pipe to the natural ground adjacent to the pipe divided by the outside diameter of the pipe. There appears to be considerable doubt as to whether or not the effective lateral pressure against a pipe in a soil mass is a function of the projection ratio, in which case the load factor could not be a function of projection ratio. Spangler agrees that there is a possibility that conditions may exit where the load factor ceases to be a function of projection ratio. Allowable loads determined by use of Professor Spangler's load factor equation will probably result in very conservative designs.

2. Baron (*1*) noted that experimental data obtained during tests (*2*) conducted at the Waterways Experiment Station indicate that values for q higher than about 0.1 were not dependable in soils surrounding pipe subjected to repeated liveloads.

3. To prevent misunderstanding, W_s should be defined as follows:

W_s = ultimate 3-edge bearing value (pounds per linear foot of pipe) in terms of D

B. *Proposed New Criteria*

1. Determination of allowable loads on buried pipes through use of Spangler's load factor and the ultimate 3-edge bearing value will result in a less conservative design than that based on the 3-edge bearing value for a $\frac{1}{100}$-inch crack and will probably be a more reasonable design.

2. A report entitled "Final Report on Study of Watertight Drainage Pipe Joints," prepared by the District Engineer, Savannah, Georgia, for the Chief of Engineers, published in November 1955, might contain information which could be helpful in selecting the type of joints which should be permitted.

C. *Proposed Tests on Concrete Pipe*

Carefully performed large-scale field tests, possibly supplemented by model studies and theoretical work, appear to be necessary requirements if any improvements are to be made in methods presently used for design of rigid pipe.

D. *Appendix*

1. *2.2 Strength of Pipe.* It would seem that Mr. Babcock is suggesting that the ultimate 3-edge bearing value divided by 1.55 (factor of safety of 1.25 used twice) should be used as the 3-edge value for a $\frac{1}{100}$-inch crack. This is in effect requiring larger values for the 3-edge bearing value for a $\frac{1}{100}$-inch crack than specified in ASTM C-76.

2. *2.4 Minimum Height of Fill.* Computations made at the Waterways Experiment Station indicate that minimum pipe cover requirements vary with pipe diameter.

3. *3.10 Back filling.* No compaction requirements are specified for backfill materials. It is suggested that backfill materials be compacted to at least 90 percent of modified AASHO.

A method for the design of rigid pipe differing somewhat from the method used by Mr. Babcock in his paper follows. This method of design was developed by Baron (*1*) and has been used by him and by Williams (*3*) in connection with studies made for the Corps of Engineers relative to the determination of minimum and maximum cover requirements for rigid pipe underlying airfield pavements. This design method has been used at the Waterways Experiment Station for specific studies concerning pipe cover requirements and, in general, is less conservative than the method used by Mr. Babcock. This design method has not proved to be superior to other methods; therefore, the pipe cover requirement tables currently used by the Corps of Engineers have not been revised through use of this method of

design. This method of design for rigid pipe has not been published before and is presented here as a matter of record and for comparative purposes only. Design methods presently used for design of rigid pipe were developed through use of equations developed primarily from theory through the use of simplifying assumptions based on meager field test results. None of the theories used or presently available has been validated sufficiently to permit its use with confidence, and results from any one should be considered only as a guide for use until such time as better methods are available. Full-scale tests, as proposed by Mr. Babcock, possibly supplemented by model studies and theoretical developments, are necessary to help verify existing methods or develop new ones.

For a particular pipe installation, one need only determine the dead load and live load on the pipe and see that the sum of these loads is no greater than the allowable load for the particular pipe in question. The problem, therefore, is actually threefold:

a. Determine the dead load.
b. Determine the live load.
c. Determine the allowable load for the particular pipe in question.

It appears that the best methods available for use in solving these three problems are:

a. Calculate the dead load on the pipe through use of Marston's equations for loads on buried conduits as presented and explained in chapter 25 of Professor M. G. Spangler's book, *Soil Engineering*, published by the International Textbook Company in 1951.

b. Determine the live load on the pipe through use of the theoretical vertical stress curves for vertical stress beneath a uniform circular load as shown on plate A3 in "Investigations of Pressures and Deflections for Flexible Pavements, Report No. 1, Homogeneous Clayey-Silt Test Section," Technical Memorandum No. 3-323, Waterways Experiment Station, Vicksburg, Mississippi, March 1951, or as shown in Figure 1 of "Stresses and Deflections Induced by a Uniform Circular Load," page 467, volume 33, Proceedings of the Highway Research Board. These curves give the theoretical vertical stress beneath a uniform circular load in percent of the surface contact pressure (p) for various depths in terms of the radius (r) of the uniform circular load. The values for the contact pressure (p) and the radius (r) of the uniform circular load are determined from the following equations:

$$P = \pi r^2 p$$

where P = wheel load.
p = contact pressure = tire pressure (approximate).
r = radius of uniform circular load.
A = contact area.

$$p = \frac{P}{A} = \frac{P}{\pi r^2}$$

and $$r = \sqrt{\frac{P}{p\pi}}$$

For single wheels, the maximum live-load stress will always be beneath the center of the uniform circular load. For dual assemblies (in case P = airplane wheel load), the point of maximum stress migrates from beneath the center of each wheel to a point midway between the dual wheels as the depth increases. The maximum vertical stress beneath dual wheels is always composed of the sum of the stresses induced by each wheel at a common point.

c. The equation used to calculate the allowable load for rigid pipe was presented in an unpublished report (*1*) by Mr. Frank Baron, prepared for the Ohio River Division Laboratories of the Corps of Engineers, and is based on equations derived, presented, and explained by Arthur N. Talbot in Bulletin No. 22 of the Engineering Experiment Station, University of Illinois, entitled "Tests on Cast Iron and Reinforced Concrete Pipe." A step-by-step derivation of the equation for determining the allowable load for a rigid pipe follows:

$$M = \tfrac{1}{16}(1 - n)\,Wd$$ (equation No. 9, page 11, Talbot's report)

where M = maximum bending moment at the crown and invert of pipe.
n = ratio of horizontal and vertical pressure.
W = total vertical load in pounds per unit length of pipe.
d = neutral diameter of pipe in inches.

If p = vertical load on pipe in pounds per square inch, then

$$W = pd$$

and

$$M = \tfrac{1}{16}(1 - n)pd^2$$

and

$$M = \frac{fI}{C}$$

where

$$I = \frac{bd^3}{12} \text{ in which } b = 1 \text{ and } d = t$$

then

$$I = \frac{t^3}{12}$$

where

$$t = \text{side wall thickness and } C = \frac{t}{2}$$

$$M = \frac{fI}{C} = \frac{ft^2}{6}$$

and

$$\frac{ft^2}{6} = \tfrac{1}{16}(1 - n)pd^2$$

and

$$f = \tfrac{3}{8}\frac{pd^2}{t^2}(1 - n)$$

Since the first crack occurs at the inside bottom of the pipe, the stress due to lateral pressure will be subtractive from stresses due to bending; therefore

$$f = \tfrac{3}{8}\frac{pd^2}{t^2}(1 - n) - \frac{npd}{2t}$$

which can be written

$$p = \frac{f}{\frac{d}{t}\left[\tfrac{3}{8}\frac{d}{t}(1 - n) - \frac{n}{2}\right]}$$

From the 3-edge bearing test:

$M = 0.159\ Wd$ (equation 10, page 13, Talbot's report)

where W = test load per linear inch of pipe which will produce $\tfrac{1}{100}$-inch crack

d = mean diameter of pipe

Therefore, as above

$$M = 0.159Wd = \frac{fI}{C} = \frac{ft^3}{6}$$

and

$$f = 0.954\frac{Wd^2}{t^2}$$

Experimental results (*2*) have indicated that the load required to cause initial cracking of rigid pipe averaged 72 percent of the load required to produce a $\tfrac{1}{100}$-inch crack. Therefore

$$f = 0.954\frac{Wd^2}{t^2}(0.72)$$

and

$$p = \frac{0.687Wd^2/t^2}{\frac{d}{t}\left[\tfrac{3}{8}\frac{d}{t}(1 - n) - \frac{n}{2}\right]}$$

where p = allowable load on rigid pipe in pounds per square inch. The value to use for n is known to vary with different soils and construction procedures. Experimental measured values for n (*2*) varied from $n = 0$ to $n = 0.37$. It is doubtful that rigid pipe deflects enough before failure to develop any appreciable passive side pressure. Test results (*2*) also indicated that values for n greater than about 0.10 could not be depended on under repeated live loads. In office studies now being made at the Waterways Experiment Station relative to pipe cover requirements for rigid pipe underlying flexible and rigid pavements, we have used $n = 0$ for depths from 0 to 4 feet and $n = 0.1$ for depths greater than 4 feet. Where rigid pipe is subjected to dead-load stress only, a value of $n = 0.3$ should be used. Williams (*3*) suggests that a safety factor of 1.25 be used with the equation for allowable load; but in studies now being made at the Waterways Experiment Station, no safety factor is used with this equation.

REFERENCES

1. Baron, F., "Minimum Requirements of Cover for Concrete Pipe Culverts Under Concrete Pavements," report submitted to the Corps of Engineers, U. S. Army, Ohio River Division, as a part of an

investigation of concrete pavements of airports, 19 June 1945.
2. Corps of Engineers, Waterways Experiment Station, "Investigations of Stress Distribution on Drain Pipe Due to Surface Load, Preliminary Report, Details of Testing and Summary of Test Data," Vicksburg, Miss., 15 April 1942.
3. WILLIAMS, H. M., "Pipe Cover Studies for Airfields," A study made for the Corps of Engineers in the Office of the Chief of Engineers, Washington, D. C., 1948 (unpublished).

HOWARD F. PECKWORTH, *Managing Director, American Concrete Pipe Association, Chicago, Illinois*—The concrete pipe industry is indebted to Mr. Babcock for devoting several years of rigorous mental activity to a problem which is far from simple. There were many factors involved, and he surmounted the difficulties which everyone has when dealing with the properties of materials like concrete and soils. In addition, the industry is indebted to E. L. Erickson, Bridge Engineer of the Bureau of Public Roads, under whose direct supervision this work was accomplished. Furthermore, the industry is indebted to the entire personnel of the Bureau of Public Roads who had a hand in this work and to several Commissioners who authorized the work and under whose general direction the work was carried on.

There is one part of Mr. Babcock's paper which has caused much discussion among the staff of the American Concrete Pipe Association and members of the industry who are especially interested in design problems. Reference is made to the fact that Mr. Babcock has assumed a factor of safety of 1.25 based on ultimate failure in the 3-edge bearing condition. The assumption of the factor of safety is a matter of engineering judgment and Mr. Babcock has chosen a practical and workable factor of safety. It is difficult or impossible to condense into the space of a written discussion why this factor of safety is all right, but an attempt will be made to do so.

1. In the larger and heavier *D*-load pipes, special designs are necessary using hangars, stirrups or thicker walls. Our experience with those designs would indicate that the ratio of $\frac{1}{100}$-inch crack to ultimate failure in the 3-edge bearing test condition is as 80 plus to 100. In other words the $\frac{1}{100}$-inch crack occurs at between 80 to 90 percent of ultimate. In this design the minimum strength pipe (one which just meets the design requirements) would show the $\frac{1}{100}$-inch crack at a factor of safety of one (or the $\frac{1}{100}$-inch crack would be 80 percent of ultimate). In addition, numerous tests prove, and practical considerations demand that the manufacturer has to produce a pipe well over the minimum in order to insure passing the 3-edge bearing test. Thus Mr. Babcock's factor of safety in this design is all right and the $\frac{1}{100}$-inch crack in the 3-edge bearing condition will only show up on the very rare occasion of a possible minimum strength specimen.

2. In the smaller diameter, smaller *D*-load pipe as manufactured under the present ASTM Specifications C-75 and C-76, the ratio of $\frac{1}{100}$-inch crack to ultimate in the 3-edge bearing condition is as 2 to 3. In other words, the $\frac{1}{100}$ crack occurs at two-thirds of the ultimate. In my opinion this was done to allow less desirable designs and minimum quality standards, steel not necessarily bonded, steel not necessarily in correct position, etc. to meet the specifications. In this case it might be argued that Mr. Babcock's factor of safety of 1.25 on ultimate would be $13\frac{1}{3}$ percent over a factor of safety of one on the $\frac{1}{100}$ crack of the minimum specimen. In practice this probably will not be true because:

As stated above, numerous tests prove and practical considerations demand that the manufacturer has to produce a pipe well over the minimum in order to insure passing the 3-edge bearing test.

In most parts of the country the more accurate methods of manufacture are superseding the sloppier methods and the better the steel and concrete work together etc., the closer the $\frac{1}{100}$-inch crack is to ultimate.

3. In addition to the above there are other mitigating circumstances, for instance:

The greatest moment in the 3-edge bearing condition is almost twice what it is in an average "B" bedding condition in the field because there is help from side pressures which Marston's theory ignores.

All the constants in Marston's theory (projection ratio, settlement ratio, load factor K, and u) are invariable, assumed on the conservative side.

Cracking in concrete is not the awful thing

many people consider it to be. When resisting a load, all reinforced concrete structures use the compressive strength of the concrete and the tensile strength of the steel and in doing that the concrete (except prestressed concrete) on the tensile side will crack even though those cracks are not visible to the naked eye. In concrete sewer and culvert pipe, in my opinion, the $\frac{1}{100}$-inch crack is an allowable design crack and an allowable working crack. In other words, when the pipe is in the field loading condition the opening up of a $\frac{1}{100}$-inch crack shows that the design is efficient and the pipe is not overdesigned. The appearance of the $\frac{1}{100}$-inch crack is not failure. Likewise a concrete pipe tested to the $\frac{1}{100}$-inch crack has not been damaged and can still be used with safety. When the load is released, the crack will close up and disappear. When the $\frac{1}{100}$-inch crack appears in the field loading condition, it will disappear in a short time by autogeneous healing.

If my above analysis of conditions affecting the factor of safety are correct, 99 concrete culvert pipes out of 100 put in the ground in accordance with Mr. Babcock's paper will show no visible crack. The one minimum specimen in a hundred may show up the $\frac{1}{100}$ crack or the 0.015-inch crack, but I think that on further examination you would find that that specimen would not pass the provisions of the specifications in the matter of steel placement or that something else was wrong such as lack of bond between the steel and the concrete.

In consideration of all these matters and others it is my opinion that Mr. Babcock's factor of safety of 1.25 on ultimate failure is correct, practical, and workable.

In Mr. Babcock's paper I like the fact that he has been factual throughout. In other words he has called a "B" bedding condition "B" instead of "C". In matters like this, so many designers will call for one condition not expecting to get one that good. In my opinion it does the industry and the public a great disservice for a consumer to call for a heavy pipe where he needs a lighter design just because he does not want to take the time and the effort to require tests and because he expects to be short-changed. Mr. Babcock's approach in this policy matter has been direct, simple, and honest and we are appreciative of that attitude.

There are several other matters I could mention but they have been covered in the comments of John G. Hendrickson, Jr., so I will not repeat them here.

In my opinion Mr. Babcock's paper is the greatest contribution to the concrete pipe industry since the development of the original ASTM concrete pipe specifications by the old Joint Culvert Pipe Committee back in 1926 and since the original development in Iowa by Messrs. Marston, Spangler, and Schlick of the original Marston's theory. It is a milestone which will be used and referred to half a century from now. The concrete pipe industry is indebted for this paper to the Bureau of Public Roads, to the Commissioners who authorized and directed the work, to all the many men in the Bureau and outside the Bureau who made contributions, and especially to Dudley Babcock who wrote the paper and E. L. Erickson under whose direction the work was done.

Dudley P. Babcock, *Closure*—The discussers of this paper are all specialists in the pipe field. Their criticisms and suggestions are most welcome and certainly add to the value of the paper.

If the paper were to be written over again, certain modifications would be made in view of the suggestions offered. For example, bedding curves B and C in Chart II should have been stopped at projection ratios of 0.7 and 0.9, respectively, instead of being carried all the way to projection ratios of unity. Mr. Bald pointed out this inconsistency with the criteria. However, no errors are involved, so the chart may be used as is.

It is noted that Messrs. Adams, Bald, and Bespalow take exception to certain parts of the jointing criteria. Mr. Adams states that rubber gaskets are often used with bell-and-spigot pipe, a fact of which the author was not aware. Mr. Bald thinks the author's rubber gasket specifications are too exacting and Mr. Bespalow wants the whole pipe-joining specifications reclassified.

Mr. Bald suggests that the example given on Chart II be reversed so that the height of fill is given and the strength of pipe is to be determined. He is right; it would have been better to make the example as he suggests. However, the chart is so simple that one should be able to find the pipe strength after following

the example. The quantities involved are:

1. Projection ratio.
2. Settlement ratio.
3. Bedding constant.
4. Three-edge bearing strength of pipe.
5. Outside pipe diameter.
6. Height of fill.

The projection ratio and outside diameter of pipe occur twice in the chart. Therefore, they cannot be obtained directly without recourse to the method of trial and error. Otherwise, any one of the six values may be obtained easily from the other five.

All these criticisms are doubtless justified. When the "Design and Installation Criteria for Reinforced Concrete Pipe Culverts" are revised—and they surely will be—consideration should be given to these comments.

Another criticism of Chart II was made by Mr. Hendrickson. He says that the chart cannot be used for the ditch condition because the load factor (in this case) is not dependent on the projection ratio and because the trench width and not the outside pipe diameter should be used in the lower left-hand corner of the diagram. Mr. Bespalow points out the same thing. As regards the load factor, the projection ratio probably should be taken as zero. There can be no projection if the pipe is in a deep trench. Using this assumption, the chart gives load factors of 3.0, 2.0, 1.7, and 1.1 for class A, B, C, and D bedding, respectively. Mr. Hendrickson says that it is customary to use 3.0, 1.9, 1.5, and 1.1, respectively. Although the chart values do not agree exactly with those given by Mr. Hendrickson, they are probably close enough.

As to the substitution of the trench width for the pipe diameter, that is covered in paragraph 2.3.2. of the proposed criteria.

Mr. Adams cites two other objections to the criteria as written. First he wants to know "... why concrete pipe should be forced to accept more than its fair share of the cost of a satisfactory installation ..." His exact meaning is not understood. Apparently he thinks the pipe industry would be helped if the "projecting conduit condition" were placed in some kind of a subordinate table so as to discourage its use. In the same way, Mr. Spangler wants the "imperfect ditch" condition given more prominence.

No attempt has been made to emphasize any one of the pipe conditions. It is believed, however, that the projection condition will probably be used for low fills and that the imperfect ditch condition or the trench condition will be used for high fills. The savings to be effected in the latter case are certainly evident by reference to Table 1.

Mr. Adams points out that most of the pipe strengths given in Table 1 exceed the standards as manufactured at present. That is undoubtedly true. A few years ago the author inspected an 84-inch pipe culvert under a 60-foot fill. Every section of the pipe located under the maximum fill had failed. Inspector's reports indicated that the pipe had been installed in the projection condition. The care used in bedding the pipe probably corresponded to Class C, with 0.9 projection ratio. There was very little indication of poor workmanship in the manufacture of the pipe, which was rated 3000 D strength. Reference to Table 1 shows that 3000 D pipe is entirely too weak to use under a 60-foot fill where the projection ratio is 0.9. The pipe industry is experimenting with much stronger pipe. It is understood that there is no great difficulty in manufacturing pipe up to 6000 D; the only question is whether the increase in the cost of manufacture would be justified. It seemed best, therefore, to show strengths of pipe in the criteria up to 6000 D.

The decision as to the best 3-edge bearing test to use was most puzzling. Many engineers use the 0.01-inch crack as the strength criterion, whereas others prefer using the ultimate strength. Mr. Adams wants the basic table placed on the former basis. For "standard strength" and "extra strength" reinforced concrete pipe, the American Society for Testing Materials requires the use of both criteria. The ratio between the 0.01-inch crack strength requirement and the ultimate strength requirement varies between 0.675 and 0.550 with standard and extra-strength pipe of 12- to 72-inch sizes. The A.S.T.M. table shows a tendency toward a decrease in the ratio as the size of pipe increases, but there appears to be no straight line relation between the two.

Good reasons may be evoked for either criterion. Professor Spangler ably defends the use of the 0.01-inch crack. He believes that the average pipe will show 0.01-inch cracks at about 60 to 65 percent of ultimate. If, then, pipes are permitted to be stressed to 80 percent of ultimate (i. e., using a safety factor of 1.25),

very wide and dangerous cracks may develop. He also speaks of the danger of "slabbing," whereby the protective coating of the tension steel tends to break away, permitting the steel to "straighten out." This "slabbing" generally occurs at or near the ultimate stress and thus would hardly enter the picture if a 1.25 safety factor below the ultimate is maintained.

A good argument in favor of the 0.01-inch crack criterion is the comparative ease of testing. The machines necessary to test for 0.01-inch crack need have a capacity much less than if the pipe must be tested to its ultimate. Furthermore, the 0.01-inch crack test may be, in general, nondestructive.

The following may be advanced in favor of the ultimate criterion. First, it measures more exactly the item of prime interest: will the pipe fail or will it not? Everything that affects failure is taken into account—crushing of the concrete, tension failure of the steel, yielding of the steel, "slabbing" of the concrete. Second, if the test is performed at standard speed it is more reliable. One can overlook a 0.01-inch crack, but can hardly fail to know when the pipe has reached its ultimate. The test would not necessarily be destructive. Pipes are generally overdesigned. A 36-inch 3000 *D* pipe could be loaded to 9000 pounds per linear foot. If no failure occurred, it would pass the test.

Professor Spangler says that the 0.01-inch crack generally occurs at about 0.60 to 0.65 of ultimate load, but there are cases where the 0.01-inch crack does not appear till the ultimate is reached. For example, on January 31, 1952, tests were made by Subcommittee 8 of the A.R.E.A. on 84-inch standard and extra strength pipe. The results were stated to be as follows:

	Standard Strength	Extra Strength
First 0.01-in. crack	65,000	93,300
Maximum load	83,000	93,300

Thus it will be seen that for the standard strength pipe the 0.01-inch crack occurred at 0.78 of ultimate, showing that the ultimate criterion with 1.25 safety factor would have given a stress almost identical with the 0.01-inch crack stress. For the extra strength pipe the 0.01-inch crack criterion would have given no safety factor at all.

Perhaps the safest way would be to apply both criteria. Then when the 0.01-inch crack stress is low, it would govern. When it is high, as in the case of the A.R.E.A. test for extra strength pipe, the ultimate with 1.25 safety factor would govern. The use of the double standard has also been provided for in the proposed criteria.

Professor Spangler objects to the form of Table 1 on two counts. First, he doesn't like the "imperfect ditch" method put in the same category with the bedding methods, because one applies to conditions under the pipe and the other to conditions over it. Of course, he is entirely correct. The one has no relation to the other except that both affect the strength of pipe required. The arrangement may be illogical, but it probably will cause no confusion or misunderstanding.

Professor Spangler's second objection is the use of interpolation between the various projection ratios. He says: "... It is suggested that a more workable procedure would be to establish several (not to exceed four) types of installation conditions which can readily be created in the field by contractors...." If his meaning is correctly understood, fill may be compacted by modern machinery to such an extent that a pipe actually placed on the surface of the original ground may act as if the projection ratio were zero. That may be true and, if so, a specification could be written to produce that compaction. But the tables could still be used. The only change would be in the projection ratio. In other words, field conditions may be brought to agree with one column of the tables or the tables may be interpolated to agree with the field conditions, whichever is expedient.

Mr. Brown probably misunderstands paragraph 2.2 when he says: "It would seem that Mr. Babcock is suggesting that the ultimate 3-edge bearing value divided by 1.55 (factor of safety used twice) should be used as the 3-edge value for a 0.01-inch crack."

There are "built in" safety factors of 1.25 in Table 1 and Chart II. Where the 0.01-inch crack load criterion is used, the safety factor is to be removed by dividing all table and chart strength values by 1.25.

Only two discussers comment on the size of the safety factor. Mr. Hendrickson thinks it should be 1.50, whereas Mr. Peckworth prefers the value used, i. e., 1.25.

Mr. Brown gives a formula suggested by

Mr. Frank Baron for determining the allowable load on rigid pipe, given the 3-edge bearing strength of pipe, the diameter of pipe, and thickness of pipe wall. But having obtained the allowable load, the depth of fill must then be found by recourse to the Marston-Spangler method or some other method. Furthermore, his pipe wall is assumed unreinforced, whereas the proposed criteria provisions apply to reinforced concrete pipe only.

Mr. Bespalow does not agree that the smaller the diameter of pipe the greater the minimum cover needed. He reasons that the ratio of wall thickness to pipe diameter is considerably greater in small pipe than in large and that the concentrated load is only partly borne by the pipe in case the pipe is small. In answer it might be said that the author's statement was entirely theoretical, that it covered sizes between 24 inches and 120 inches only, that it referred to pipes of exactly the same D values (this covers Bespalow's point 1), and that the spreading of the concentrated load to the surrounding earth was allowed for (covering Bespalow's point 2).

A word or two about the proposed tests may be in order. At least three of the discussers feel as the author does that more tests are needed if much progress is to be made along the line of pipe culvert design. It is agreed that these tests will be expensive, but nevertheless they should be made. In fact, Mr. Adams wishes to extend the author's series of tests to include various sizes of pipe and relative stresses at 0.01-inch crack and at ultimate.