DEPARTMENT OF MATERIALS AND CONSTRUCTION

Procuring Traffic Paint on the Basis of Performance Tests

C. C. RHODES, *Chemical Research Engineer, Michigan State Highway Department*

This paper describes an effective procurement procedure developed in Michigan based on a performance method of specifying and testing traffic paints. New testing equipment and techniques include an experimental paint spraying machine which puts down test stripes at a constant, uniform, wet-film thickness regardless of the consistency of the paint or travel speed of the machine, and the use of absorption spectroscopy to identify purchased paint with the sample tested.

A method of evaluating the test paints has been worked out which takes into account over-all service or integrated performance from the first day of the test to the last. From the service factor so derived, bids of selected prospective vendors are evaluated quantitatively on the basis of cost per mile per unit of service.

In addition to a description and discussion of both the administrative and testing features of the program, some comments are made on newly adopted ASTM tests and revisions for traffic paints based on their use in this work. Current Michigan specifications for white and yellow traffic paint are also appended.

● BECAUSE of a generally unsatisfactory experience with white and yellow traffic paints purchased on the basis of formula specifications, the state of Michigan, in 1953, adopted a performance method of specifying, testing and purchasing these products. The procedure finally evolved, from procurement of samples to award of contract, is unique in many respects. It has solved several troublesome problems which have long been stumbling blocks in the way of performance testing: such problems, for instance, as securing accurate and uniform control of film thickness in test stripes; evaluating the paints to take into account over-all service or integrated performance from the first day of the test to the last; and, most important, making sure that the paint finally purchased is essentially identical with the sample tested.

The purpose of this paper is to describe the procedure and equipment used, and note some of the more important practical benefits derived from their application to the purchase of traffic paints. In addition to a description and discussion of both the administrative and testing features of the program, some comments will also be made on a few ASTM tests and revisions for traffic paints based on their use in this work during the past two years. Current Michigan State Highway Department specifications for white and yellow traffic paint are also appended.

At the outset, the procurement of good traffic paint was of sufficient importance and concern both to the Highway Department and the Purchasing Division of the State Department of Administration to warrant considerable attention and effort on the part of both of these branches of the state government in securing the best possible product in terms of service per dollar expended. In its annual striping program, Michigan uses nearly 100,000 gallons of white and yellow paint, all of which is reflectorized with glass

beads applied at the rate of 6 pounds per gallon of paint. This represents a material cost alone of more than a quarter of a million dollars. Moreover, it is extremely important that traffic stripes have sufficient durability to function effectively through the winter and early spring when driving is especially hazardous because of generally lower atmospheric visibility.

Consequently, at the request of State Highway Commissioner C. M. Ziegler, a traffic paint committee was organized for the purpose of establishing a performance type of specification. Members named to this committee were J. C. McMonagle, Director of the Planning and Traffic Division, Chairman; B. R. Downey, Maintenance Engineer; and W. W. McLaughlin, Testing and Research Engineer—all of the State Highway Department; and J. L. Byers, Standards Engineer, Purchasing Division of the State Department of Administration. At its first meeting, a working subcommittee was appointed to represent the main committee in making field observations and to carry out the details of the tests. J. L. Byers was appointed to this subcommittee also, along with one representative from each of the three highway department divisions involved, namely, R. A. Rigotti, Planning and Traffic Division; V. G. Burgess, Maintenance Division; and C. C. Rhodes, Testing and Research Division.

ADMINISTRATION OF THE PROGRAM

At the first meeting of the committee and during later discussions certain decisions on policy and general rules to govern the tests were arrived at, the most noteworthy of which are listed as follows:

1. Only prequalified vendors who could show evidence of experience in producing an acceptable traffic paint would be allowed to furnish samples.
2. Only one product from each manufacturer was to be included in the tests.
3. All samples were to be purchased by the Highway Department, such samples to be sufficient to provide for both longitudinal and transverse stripes.
4. Longitudinal stripes were to be put down by departmental crews in the same way as in their regular work, following the manufacturers' recommendations, if any, on details of quantities and application.
5. Transverse stripes were to be applied by selected personnel under the supervision of the Research Laboratory of the Testing and Research Division using the same type of spraying and bead dispensing equipment as that used by the regular striping crews. Four test areas, two on concrete and two on bituminous surfaces, were to be established, the paints to be applied here also according to manufacturers' recommendations.
6. Only the transverse stripes were to be used as a basis for quantitative evaluation of performance, the longitudinal stripes to be used for judging handling and application characteristics.
7. Final ratings of the transverse stripes were to be based on cost per mile per unit of service.

Other details of administration and testing decided on by the committee as problems concerning them arose in the progress of the program will be brought out in their appropriate connection later.

PAINT TESTS

In general there are three phases of testing involved in the procedure currently used in Michigan: (1) testing the original samples for the purpose of identification and to determine compliance with specific requirements governing the physical properties deemed necessary for proper handling, application, and performance; (2) field tests to determine quantitatively the order of merit of the various paints in service; and (3) acceptance tests of the paint finally purchased to establish identity with the reference sample originally tested. There are no composition requirements in the specifications and it is left entirely to the manufacturer to formulate and produce a paint which he wishes to furnish for the service tests.

Samples are procured by purchasing 100 gallons of each test paint (white and yellow) from each prequalified vendor or producer. Of this 100 gallons, 5 gallons are packaged in quarts and pints for transverse field stripes and laboratory tests. The remaining 95 gallons, usually shipped in 5-gallon pails, are put down in longitudinal stripes by one or more of the department's field crews in the course of their regular work.

Qualification Tests

All samples furnished for performance tests must meet five preliminary requirements in order to be considered for final evaluation. These requirements concern color, consistency, drying time, bleeding, and settling. The general significance of these requirements is self-evident but it may be worth while to state briefly what the requirements are, why the particular limits were set, and what test methods are used in connection with them.

Color. Color requirements at present are that the white paint have a minimum luminous directional reflectivity of 80 percent relative to magnesium oxide and that the yellow match the U. S. Bureau of Public Roads standard shade within the green and red tolerance limits. Actually, reflectivity is not a measure of color but is closely related to whiteness. However, chromaticity coordinates and luminous directional reflectivity are being determined for all white and yellow paints, both in qualification and acceptance tests, for the double purpose of identification and correlation with appearance to afford the basis for a possible psycho-physical color specification later on. Reflectivity and color tests are performed according to ASTM Method D 307 using an ultraviolet spectrophotometer with reflectance attachment. This instrument covers the visible as well as a portion of the ultraviolet range of the spectrum.

Consistency. The importance of proper consistency of traffic paints intended for bead reflectorization by the drop-in method is becoming increasingly evident in the light of recent observations of both experimental and performance tests. Besides its effect on application characteristics of the paint itself, it influences to a large extent the way in which the drop-in beads are distributed through the paint film, which, in turn, has a marked effect on the durability and reflective life of the stripe. While the optimum range of consistency has not been determined completely as yet, it is already apparent that a compromise must be struck between the necessity, on the one hand, of maintaining sufficient body to hold a clean stripe edge and, on the other, the desirability of keeping the paint thin enough to allow the smaller beads to descend to the bottom of the wet paint film during application. When premixed paint and beads are used, even with a supplementary bead drop-in for initial brightness, the limits of consistency are dictated solely by application requirements. With these considerations in mind, the consistency range for unbeaded paint intended for drop-in application has been set at 65 to 80 KU (77 F) and for premix, 75 to 95 KU. While the consistency of the test paint may fall anywhere within these limits, a uniformity clause requires that paint furnished subsequently under contract may not vary (also within those limits) by more than 5 KU from the reference test paint. More research should be done, however, to determine more exactly the optimum range of consistency for traffic paints put down by the drop-in method of bead application.

Drying Time. In order not to unduly hamper the formulation of more durable products, the drying limit was extended to one hour from the 30 minutes previously required under the formula type of specification. Owing to the fact that it has not been possible in our experience to establish a definite correlation between ASTM D 711 (1955 proposed revision) and field drying time, it has been necessary to rely on drying times obtained for the test stripes to determine conformance with this requirement. However, failure to comply automatically eliminates any such paint from competition. The requirement is fairly liberal and states that the paint must dry to no pickup on concrete or bituminous pavement within an hour at temperatures between 60 and 80 F and relative humidities less than 60 percent. The ASTM standard wheel is used in making field tests.

Bleeding. White and yellow paints are tested for bleeding on both tar and asphalt substrates according to ASTM methods D 969-54 and D 868-48. A minimum rating of 4 is required and, since the presence of beads may have some influence on the visible effects of bleeding, all paints are tested with their prescribed bead complement whether or not they contain beads as received.

Settling. ASTM method D 869-48 is used to evaluate settling, with a minimum numerical rating of 6 required. Because this test requires 6-month shelf storage, here again the paint must be included in the field application before the results of the laboratory test are known. The 2-week accelerated test, ASTM D 1309-54T, has been tried in an effort to get an earlier answer and while the correlation

with the 6-month test is good, some paints show a marked change in consistency in the accelerated test which might throw suspicion on the results until they were verified by shelf storage. This and other ASTM traffic paint tests will be taken up later as a separate topic for discussion.

Field Tests, Longitudinal Stripes

As mentioned earlier, 95 gallons of the test paint are applied by regular field crews in longitudinal stripes as part of the testing program. These stripes are not evaluated quantitatively but are used solely to enable department operators to observe any unusual characteristics of the paint which may affect handling and application. At first these stripes were also evaluated by the traffic paint subcommittee until it was found that the results of the longitudinal stripe evaluation qualitatively confirmed those of the transverse stripe tests. During the first full scale experiments along this line, the conclusion was reached that there were too many uncontrollable variables entering into longitudinal stripe tests to permit trustworthy quantitative evaluation of the various paints. Some of these variables are weather at the time of application, wet film thickness, amount of paint remaining from previous applications at the time of retracing, local variations in pavement and subgrade drainage, age and condition of concrete surfaces, and the number and type of access roads in the vicinity. Consequently, service ratings are made only on transverse stripes, where external factors affecting performance are very nearly constant for all paints.

Field Tests, Transverse Stripes

Essential details of the transverse stripe tests are given in the appended specifications. It will be noted that these specifications permit furnishing paint and beads in four different ways. Two of these correspond with the respective products of two leading manufacturers of proprietary brands of reflectorized traffic paint. One of these supplies only a prebeaded paint without supplementary drop-in beads and the other a package product consisting of separate paint and beads for drop-in application only. Inasmuch as Michigan requires a supplementary drop-in of top beads when a prebeaded paint is used (overlay method), the option is provided the paint producer of furnishing a complete paint-bead system should he so desire. Alternatively he may, moreover, specify the particular reflectorizing system to be used with his unbeaded paint in the performance tests, whether or not he proposes to furnish the beads. In the latter case, beads used either for drop-in (Michigan specification type 3) or overlay (types 1A and 2A) are furnished by the state and their cost added to that of the paint to determine unit material cost of the system.

Application. Three stripes of each paint are applied in each test section. The paints are identified only by code number, stripes in each section are numbered consecutively in the order of application, and the locations of the various paints are rotated in the four test sections to compensate for variables arising from differences in the time of application. All samples of a given color in a given test section are put down on the same day. If interruptions occur, due either to weather or breakdowns, a whole new section is begun again on another day. Detailed observations are made during the application of the paints, including air temperature and relatively humidity, atomization pressures, wet film thickness, drying time, stripe width, and Hunter night visibility readings.

In order to guarantee a rate of application within ± 5 percent of the manufacturer's recommendation, a totally new machine was designed and built for these tests. By using a piston geared to an axle of the carriage through a rack and pinion and acting directly against the paint in a cylinder, a metered quantity of paint is delivered to each stripe by direct displacement. In this way, the paint is put down at the prescribed rate irrespective of the travel speed of the machine or consistency of the paint. By means of a four-speed transmission and a series of supplementary gears, the wet film thickness can be varied from 12 to 25 mils in increments of 1 mil. Photographs of the machine are shown in Figure 1 and a perspective drawing in Figure 2. The machine has two branches from the main air line, one for air to atomize the paint in the gun and the other to furnish power for an air motor to drive the machine. While the machine is designed to deliver predetermined quantities, the actual rate is verified in each case by a weight check of a test line segment on heavy

wrapping paper. These checks showed that the required value was very closely approximated in all cases (Table 1). The precision of film thickness control is also demonstrated by the fact that visible wear was very nearly the same in the three replica stripes of each paint, as can be seen in the photographs of Figure 3.

Evaluation. Both day and night evaluations are made independently by the members of the subcommittee as soon as possible after the paints are applied and at intervals of approximately three months thereafter for a period of one year. This makes a total of five evaluations in which the paints are rated for night visibility, durability, and general appearance, the latter quality also including color fidelity and color retention. Details on the method of rating may be found in the appended specifications. As stated there, the three qualities evaluated are not considered of equal importance. Night visibility is weighted 50 percent, durability 40 percent, and general appearance 10 percent. After the final evaluation, a service factor is determined for each paint which represents its overall performance in all four test sections over the entire test period. Service factor is arbitrarily defined as one one-hundredth of the area under the curve obtained by plotting average weighted rating against time in days, the area being obtained by graphical integration. Thus, performance at all stages of the test is taken into account rather than just the terminal condition of the test stripes. Tables 2 and 3 show the way the data are finally worked up for presentation to the Traffic Paint Committee.

PROCUREMENT

After the paints have been tested and evaluated according to the procedures just described, there remain three steps in the actual procurement of paint for the statewide striping program: (1) selection of bidders; (2) evaluation of bids quantitatively on the basis of performance in the tests; and (3) acceptance tests of paint delivered by the successful bidder to determine identity with the reference paint originally purchased for the performance tests. All three of these steps are essential to the success of the method and the way they operate here represents a significant departure from conventional procedures.

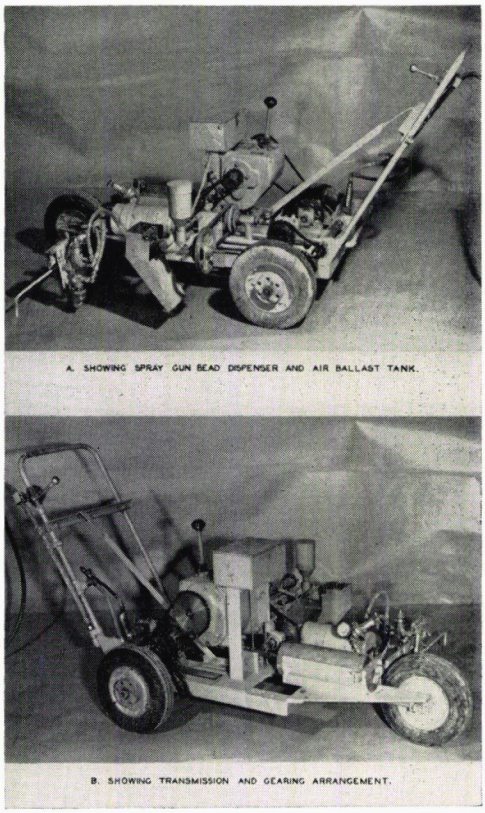

Figure 1. Two views of experimental striping machine. Top: Showing spray gun bead, dispenser and air ballast tank. Bottom: Showing transmission and gearing arrangement.

Selection of Bidders

Because lives as well as money are at stake, it was the unanimous decision of the committee that a minimum relative standard of performance would be set, below which no product would be considered, regardless of cost. Up to now, however, there has been no rigid formula set up to determine the dividing line between satisfactory and unsatisfactory performance. Referring again to Table 3, it will be seen that the final evaluation of performance is expressed in terms of "Percent of Best" and "Percent of Perfect." The first of these terms is self-explanatory. "Percent of Perfect" is based on a service factor calculated for a weighted rating of 10 throughout the test—the highest possible score. Both methods of rating are used as information for guidance in the selection of bidders, but only the

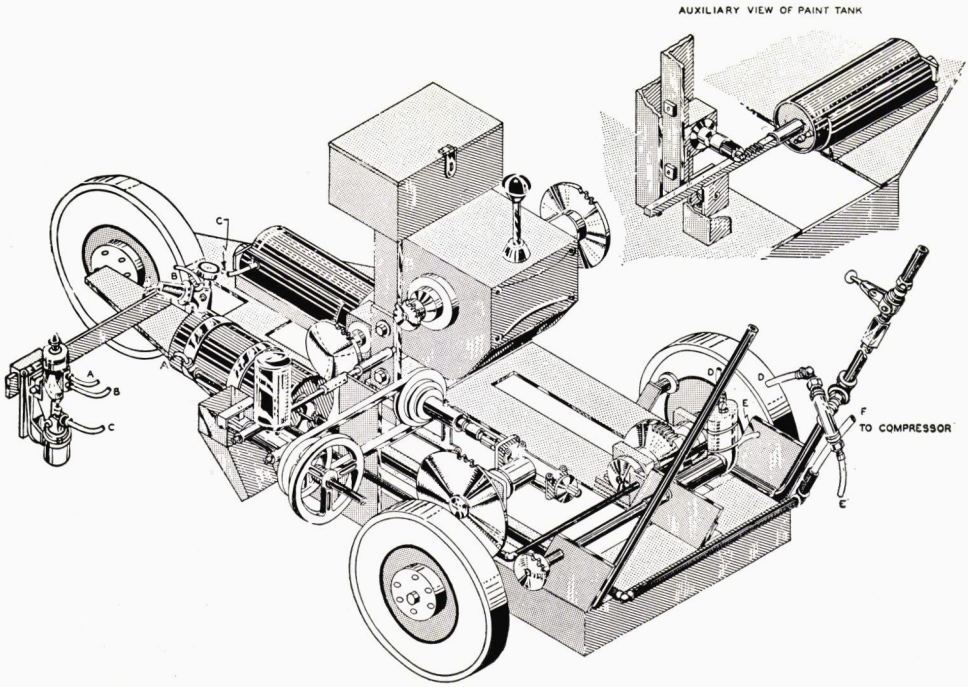

Figure 2. Perspective drawing of striping machine showing details of construction.

former is used in the quantitative evaluation of bids.

It was apparent from the results of the first year's tests that no rigid arbitrary limit could be set on minimum relative performance and still maintain effective competition for the purchase contract. For instance, it is entirely possible in one year to have three or more products within the top 10 percent range of performance, and, in another year, none within 10 percent of the best. In the first case, it is obviously feasible and desirable to include in the bidding only the paints which performed at least 90 percent as well as the best. In the second, such a practice would totally eliminate competition. For this reason, the selection of producers who will be invited to submit bids is made independently each year by the committee and is largely determined by the way in which the various products are grouped in the final ratings.

Just recently a policy was proposed which would put the selection of bidders on an absolute basis independent of relative performance. In this method of selection, only those products having a service factor greater than a specified minimum in terms of percent of perfect would be included in the bidding. Further experience is necessary to determine what that minimum should be. In the selection of bidders, white and yellow paint are considered separately and the same producer does not necessarily get the order for both.

Evaluation of Bids

In the formula developed for the quantitative evaluation of bids, only material costs are considered, since other items, such as the cost of application, are nearly constant for all paints. It was the intent of the Traffic Paint Committee that the final ratings of the various paints be based on the cost per mile per day of useful life. This presented a problem because the exact point at which a stripe becomes no longer useful had not been determined and, if it were, the time consumed in reaching that point for all paints would be so excessive as to make the test impractical. The same idea, however, can be expressed in terms of cost per mile per unit of service defined as percent of best performance—that is, the cost of a particular paint can be adjusted on the basis of its performance compared to that of the paint having the highest rating.

TABLE 1
APPLICATION DETAILS FOR INDIVIDUAL PAINTS
1954 Transverse Stripes

Paint No.	Recommended Rate		Film Thickness, Mils		Beads, Quantity per Gallon
	Gallons per mile	Film thickness, mils	Permissible range	As applied*	
White Paint					
1	16.5	15.0	14.3–15.8	14.8	6 lb. on
2	16.0	14.6	13.9–15.3	14.2	2 lb. on
3	16.5	15.0	14.3–15.8	14.6	2 lb. on
4	16.5	15.0	14.3–15.8	15.0	6 lb. on
5	16.5	15.0	14.3–15.8	14.6	6 lb. on
6	16.5	15.0	14.3–15.8	14.6	6 lb. on
7	16.5	15.0	14.3–15.8	14.8	4 lb. in–2 lb. on
8	16.5	15.0	14.3–15.8	15.1	6 lb. on
9	16.5	15.0	14.3–15.8	14.6	6 lb. on
10	16.5	15.0	14.3–15.8	15.0	4 lb. in–2 lb. on
Yellow Paint					
11	15.5	14.1	13.4–14.8	14.8	6 lb. on
12	16.0	14.6	13.9–15.3	14.4	2 lb. on
13	16.5	15.0	14.3–15.8	14.7	2 lb. on
14	16.5	15.0	14.3–15.8	15.1	6 lb. on
15	16.5	15.0	14.3–15.8	15.0	6 lb. on
16	16.5	15.0	14.3–15.8	15.1	6 lb. on
17	16.5	15.0	14.3–15.8	14.8	4 lb. in–2 lb. on
18	16.5	15.0	14.3–15.8	15.3	6 lb. on
19	16.5	15.0	14.3–15.8	15.0	6 lb. on
20	16.5	15.0	14.3–15.8	14.9	4 lb. in–2 lb. on

* Average for four test areas.
Notes: All paints applied at the rate of 16.5 gallons per mile unless otherwise specified by vendor. Beads applied at the rate of 6 pounds per gallon by drop-in unless otherwise specified by vendor.

Figure 3. Traffic stripe wear. Top: Triplicate stripes of two paints immediately after application. Bottom: Same stripes as above after nine months.

In making the cost analysis for the various bidders' products, it is necessary to take into consideration only the cost per mile of finished stripe at the manufacturer's quoted price and recommended rate of application, and then adjust this cost on the basis of performance when tested under the specified conditions. Whether the paint as purchased contains beads or not, or whether the entire bead requirement is furnished with the paint does not enter into the calculation except insofar as such items affect the total cost per mile of finished stripe. This cost divided by the decimal fraction corresponding to percent of best gives an adjusted price representing cost per mile per unit of service.

A trial calculation for three different cases, Paints A, B and C, will show how this works out. The following conditions and assumptions will be made for the purpose of calculation:

1. That Paint A is supplied only as a premixed product at x dollars per gallon of premix to be applied at the rate of 16.5 gallons per mile, the state to furnish beads for an overlay of 2 pounds per gallon.

2. That Paint B is supplied only as a package product consisting of unbeaded paint and 6 pounds of drop-in beads per gallon at y dollars per gallon, including beads, to be applied at the rate of 17.5 gallons per mile.

3. That Paint C is supplied as an unbeaded paint at z dollars per gallon with the state furnishing 4 pounds of premix beads and 2 pounds of top beads per gallon, to be applied at the rate of 16.5 gallons of *premix* per mile.

4. That the price of both premix and top beads furnished by the state is 5 cents per pound.

5. That 4 pounds of beads occupy 0.2 gallon solid volume.

6. That the three paints have the following

TABLE 2
SUMMARY OF PERFORMANCE DATA
1954 Transverse Stripes

Age, Days	Factor Evaluated	White Paint										Yellow Paint									
		1	2	3	4	5	6	7	8	9	10	11	12	13	14	15	16	17	18	19	20
15	General appearance	7.6	8.8	9.6	8.2	8.4	9.1	8.6	8.8	7.4	7.5	8.6	9.2	9.9	7.5	8.2	8.6	9.0	9.0	7.2	7.8
	Durability	10.0	10.0	10.0	10.0	10.0	10.0	10.0	10.0	9.0	10.0	10.0	10.0	10.0	9.5	10.0	10.0	10.0	10.0	8.5	10.0
	Night visibility	9.0	8.2	6.6	8.5	8.6	8.9	8.5	8.4	6.5	9.2	8.8	8.2	5.8	6.7	8.4	7.9	8.0	8.2	6.4	8.6
	Weighted rating	9.3	9.0	8.3	9.1	9.1	9.4	9.1	9.1	7.6	9.4	9.3	9.0	7.9	7.9	9.0	8.8	8.9	9.0	7.3	9.1
110	General appearance	7.0	7.4	7.4	4.2	6.5	6.6	7.9	7.6	4.0	7.6	7.3	7.4	7.4	3.8	5.8	6.8	7.2	5.4	4.4	8.2
	Durability	8.2	8.4	7.7	4.6	7.4	6.2	7.6	7.8	4.2	9.6	8.8	8.1	7.7	4.2	6.4	7.8	7.8	5.6	4.2	9.8
	Night visibility	4.5	5.2	5.1	2.6	4.8	5.6	5.3	6.6	2.5	7.8	5.6	5.8	4.3	2.9	3.8	5.9	5.3	3.0	2.9	7.7
	Weighted rating	6.2	6.7	6.4	3.6	6.0	5.9	6.5	7.2	3.3	8.5	7.0	6.9	6.0	3.5	5.0	6.8	6.5	4.3	3.6	8.6
195	General appearance	5.2	6.0	5.5	1.8	4.1	4.6	4.6	4.4	2.8	7.6	5.4	5.2	5.0	2.6	3.1	4.8	4.4	1.8	3.1	7.8
	Durability	5.5	6.5	5.4	1.7	4.4	4.4	4.8	5.0	3.0	9.3	6.2	5.6	5.0	3.2	3.6	5.4	4.7	1.8	3.4	9.2
	Night visibility	3.0	4.2	3.5	1.0	2.8	4.2	3.6	4.3	1.8	6.9	3.3	3.8	2.4	2.2	1.9	4.4	2.9	1.6	2.5	6.5
	Weighted rating	4.2	5.3	4.5	1.4	3.6	4.3	4.2	4.6	2.4	7.9	4.7	4.7	3.7	2.6	2.7	4.8	3.8	1.7	2.9	7.7
289	General appearance	4.0	4.8	3.4	0.9	2.8	3.6	3.7	3.8	2.1	7.9	4.4	3.8	3.3	2.4	2.7	3.2	3.4	1.3	2.5	7.8
	Durability	4.7	5.4	3.6	1.0	3.2	3.4	3.9	4.0	2.6	8.8	5.0	4.2	3.5	2.7	2.6	4.0	3.4	1.3	3.2	9.0
	Night visibility	1.8	2.6	2.2	0.5	1.7	3.3	2.6	3.2	1.5	4.2	1.9	2.1	1.8	1.6	1.2	2.7	1.8	0.7	1.7	4.5
	Weighted rating	3.2	3.9	2.9	0.8	2.4	3.4	3.2	3.6	2.0	6.4	3.4	3.1	2.6	2.1	1.9	3.3	2.6	1.0	2.4	6.6
369	General appearance	3.6	4.4	3.0	0.8	2.8	3.0	3.3	3.4	2.0	7.4	3.4	3.6	2.7	1.5	1.8	2.3	2.2	0.8	2.2	7.6
	Durability	3.9	4.8	3.2	0.6	3.2	3.2	3.4	3.5	2.4	8.3	4.0	3.6	3.2	2.0	2.0	2.9	2.4	0.8	2.8	8.6
	Night visibility	1.2	2.0	1.3	0.4	1.2	2.3	1.6	2.0	0.8	3.0	1.6	1.4	1.3	0.9	0.8	1.8	1.3	0.3	1.4	3.4
	Weighted rating	2.5	3.4	2.2	0.5	2.2	2.7	2.5	2.7	1.6	5.6	2.7	2.5	2.2	1.4	1.4	2.3	1.8	0.6	2.0	5.9

percentage ratings:

Paint A, 90 percent of best
Paint B, 94 percent of best
Paint C, 100 percent of best

TABLE 3
SERVICE FACTORS AND TERMINAL RATINGS
1954 Transverse Stripes
Age, 369 Days

Paint No.	Terminal Weighted Rating	Service Factor	Percent of Best	Percent of Perfect*
		White Paint		
10	5.6	27.0	100	76
2	3.4	19.8	73	56
8	2.7	19.1	71	54
6	2.7	17.7	66	50
7	2.5	17.7	66	50
1	2.5	17.5	65	49
3	2.2	17.1	63	48
5	2.2	15.9	59	45
9	1.6	11.1	41	31
4	0.5	9.7	36	27
		Yellow Paint		
20	5.9	27.0	100	76
11	2.7	19.0	70	54
12	2.5	18.4	68	52
16	2.3	18.4	68	52
17	1.8	16.5	61	47
13	2.2	15.6	58	44
15	1.4	13.4	50	38
19	2.0	12.2	48	34
14	1.4	11.6	43	33
18	0.6	10.8	40	31

* Service factor for perfect performance = 35.4.

With the above assumptions, the total material costs per mile of continuous 4-inch stripe for the three products will be:

$$\text{Paint A} = (x + 0.10)16.5 \text{ dollars} \quad (1)$$

$$\text{Paint B} = (y)17.5 \text{ dollars} \quad (2)$$

$$\text{Paint C} = \frac{(z + 0.30)}{1.2} 16.5 \text{ dollars} \quad (3)$$

Formula (3) takes into account the bulking of the paint by the beads used in premixing.

The above costs per mile when adjusted for service performance are:

$$\text{Paint A} = \frac{(x + 0.10)16.5}{0.90} \quad (4)$$

$$\text{Paint B} = \frac{(y)17.5}{0.94} \quad (5)$$

$$\text{Paint C} = \frac{(z + 0.30)16.5}{1.2 \times 1.00} \quad (6)$$

Substituting bid prices, including transportation charges, in formulas (4), (5), and (6) above will immediately give the effective quotation to be used in making the award. Suppose, for instance, that all three of the companies should bid their paint at $3.00 per

gallon. The effective quotations would then be:

Paint A, $56.83 per mile per unit of service
Paint B, $55.85 per mile per unit of service
Paint C, $45.38 per mile per unit of service

Under these circumstances, the producer of Paint C would be low bidder by a considerable margin.

Acceptance Tests

The various tests used for the identification of traffic paints purchased under performance specifications are listed below. These tests are performed both on the samples representing each production batch and on samples from material actually used in the performance tests.

Composition, percent by weight: Pigment; Vehicle.

Vehicle analysis: Non-volatiles, percent of vehicle by weight; Infrared absorption (spectrophotometric analysis).

Consistency.

Weight per gallon.

Color: Chromaticity coordinates x, y; Luminous directional reflectivity (brightness).

Drying time.

The significance of most of the above tests is pretty generally understood and the methods of performing them well established. Some of them, such as color and weight per gallon, are practical checks on composition also. However, one of the less familiar tests, that for infrared absorption, is of sufficient importance to justify a somewhat more detailed description here.

Infrared Absorption. While, in general, it is possible to quantitatively analyze inorganic pigments for chemical composition, the analysis of the vehicle by conventional chemical methods is immensely more complicated, and

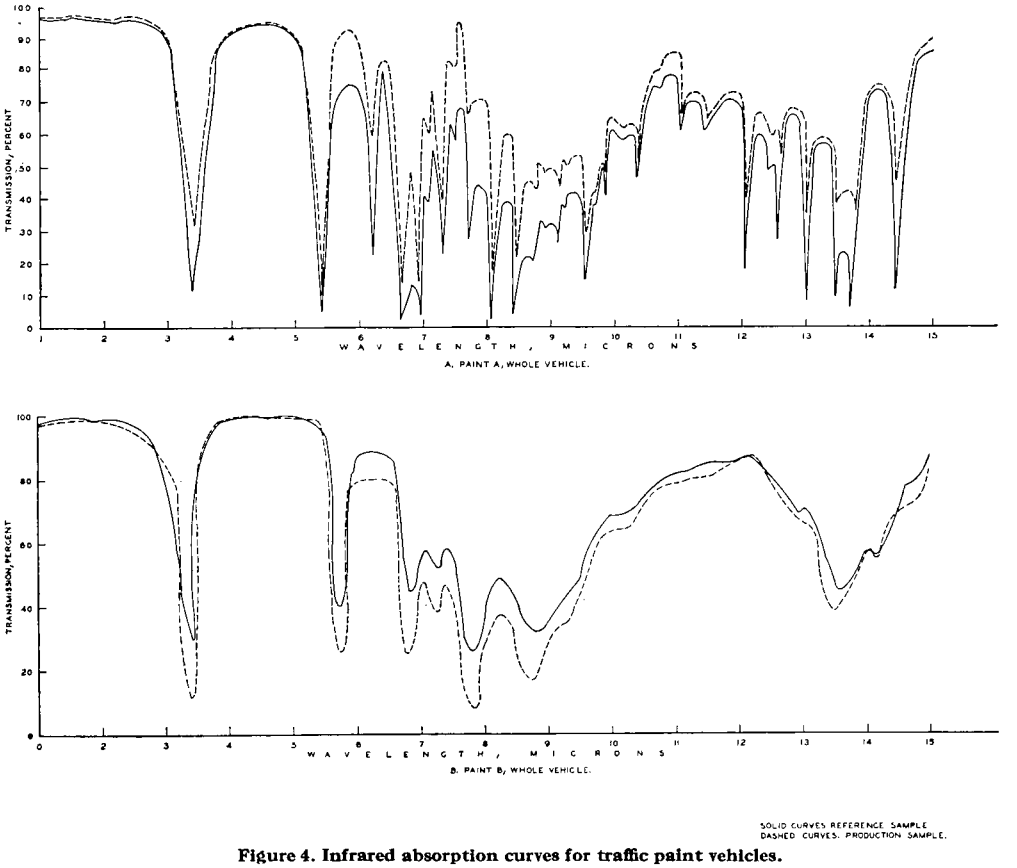

Figure 4. Infrared absorption curves for traffic paint vehicles.

often impossible. The infrared spectrophotometer is being used to fill this gap. Since each organic group or compound has its own individual characteristics of selective absorption in the infrared region of the radiation spectrum, it is possible to identify the vehicle quite precisely by a transmission curve in this region. It is not necessary to identify the individual components of the vehicle. The curve obtained by scanning the reference sample throughout the range of the instrument can be used to monitor the purchased paint empirically by comparison with the absorption curve of each batch sample.

The absorption curves in Figure 4 illustrate some typical results. In Figure 4*A*, the curves of both the reference sample and a batch sample for Paint A are plotted together. These curves are for whole vehicle only, the pigment having been removed by centrifuging, and they exhibit identical absorption characteristics. The slight vertical displacement along the entire length is due to a small difference in sample thickness. Figure 4*B* shows similar curves for Paint B, which has an entirely different vehicle resin than that of Paint A. Here, again, the curves show excellent correspondence and the correspondence in each case was maintained throughout the production of the order.

TABLE 4
DRYING TIME AND SETTLING INDEX
1954 Paints

Paint No.	Drying Time, Minutes		Settling Index	
	Field	ASTM D 711-(55)	6 Months ASTM D 869-48	Accelerated ASTM D 1309-54 T
White Paint				
1	37	41	7	5*
2	54	128	6	7
3	154	193	2	2
4	28	142	7	8
5	46	113	7	7
6	66	171	8	8
7	44	69	6	5*
8	38	62	6	7
9	45	96	6	7
10	41	73	6	7
Yellow Paint				
11	36	35	6	6*
12	66	111	7	8
13	152	154	7	6
14	27	55	8	8
15	88	82	8	8
16	70	107	8	8
17	31	66	7	6*
18	45	96	6	6
19	50	137	7	8
20	37	59	6	8

* Thickened to rubbery consistency in accelerated test.

COMMENTS ON ASTM TESTS

Results from ASTM test methods covering qualities cited in the Michigan specifications have been somewhat mixed. While all of the applicable methods tried are valuable aids in protecting paint quality, some of them have proved to be rather disappointing in view of the promise shown in earlier tests. This is particularly true of D 711-(55) for drying time and D 1309-54T for accelerated settling. In both cases it was hoped that the results of the laboratory tests could be used to determine conformance with qualification requirements before including the paint in field service tests. Obviously this would eliminate unnecessary effort on paints that did not comply. Two years of experience with these two methods indicate that they cannot be relied on absolutely to do this.

Drying Time, ASTM D 711

In Table 4, field drying times are compared with laboratory drying times determined according to the proposed revision of D 711. It is immediately apparent that no correlation exists whereby the field drying time could be predicted from the laboratory time for an unknown paint. While it has been necessary to adhere to drying times determined during application in the four test sections for the purpose of qualification, ASTM D 711 is still performed on the reference sample and all batches produced under subsequent contract as a confirming identification test.

Accelerated Settling, ASTM D 1309-54T

Also in Table 4 are listed results obtained on the same group of traffic paints by the standard 6-month shelf storage test, ASTM D 869-48 and the accelerated settling test ASTM D 1309-54T. Although, with two possible exceptions, good correlation is shown here, the results of the accelerated test in the case of the two white and two yellow paints marked in the table would certainly be questioned by the operator until verified by the standard 6-month test. When opened for evaluation at the end of the accelerated test, which includes heating in an oven at 160 F as part of the cycle, all four of these paints

had thickened to a rubbery consistency. This fact would ordinarily throw strong suspicion on the results, and definitely indicate verification by the longer method.

Miscellaneous Comments

Besides the two tests just mentioned, ASTM D 868-48, for evaluation of resistance to bleeding, could be made more useful and easier to perform by including reference photographs in color for yellow paint comparisons. It is much more difficult to make a comparison when the standard is based on a white paint and the unknown is a yellow paint than when both are white. A yellow standard would solve this problem.

In closing these brief comments on ASTM traffic paint tests, it seems pertinent to add a few remarks on the recent series of cooperative tests sponsored by Group 2, Subcommittee IV of ASTM Committee D-1. These tests, in which Michigan participated, were set up in an attempt to find an accelerated laboratory test which would put a given group of paints in the same order of merit as a field service test, qualitatively at least. The work has been beset with many difficulties and when the results are analyzed it is not surprising that all efforts so far have been unsuccessful.

Probably the most fundamental reason for this lack of success is that an attempt is being made to achieve a predetermined degree of correlation between two methods, neither of which is reproducible, either by the same laboratory or among different laboratories. Even were the laboratory test reproducible, it would have to take into account other factors than just resistance to abrasion in order to parallel a field performance test.

And what, exactly, is meant by "field performance"? There is just as much lack of reproducibility here as in laboratory tests. A given group of paints will not always perform in the same order on all types of surfaces, or in all kinds of weather, or in all locations. Some have better adhesion than others, and the same is true for resistance to weathering and abrasion. This has been demonstrated in Michigan's performance tests and is the reason for the continued use of four test sections, two each on concrete and bituminous surfaces, all on different routes.

Add to all this the fact that different observers do not always put the same paints in the same test section in the same order, and some idea of the magnitude of the task which Subcommittee IV has undertaken begins to emerge. The task may not be altogether hopeless, but it needs a new and different approach. One avenue is to develop more objective methods of measurement; a beginning along this line has been made through the development of a radio-isotope technique for measuring abrasion (*1*) and a photometer for measuring night visibility (*2*). Another is to seek out the fundamental factors of environment and application which most strongly influence traffic paint performance and devise individual accelerated tests incorporating each of these factors if necessary. The use of statistical methods in the design of tests and interpretation of results is also definitely indicated.

CONCLUSION

The use of the present procurement method in Michigan has given the state products of higher quality and greater durability at considerably lower costs than those obtained by previous purchasing methods. The first year of operation netted a saving of $103,000 in actual cost and $215,490 in evaluated cost over the costs of the previous year in which proprietary brands were purchased. It also effected a reduction in the amount of paint required the following year. There were many instances where traffic stripes on trunkline routes did not require renewal for two years, with the result that the state purchased 12,000 gallons less white and yellow paint for 1955 than for 1954. In addition, the continued presence of the painted lines through the dangerous driving months of winter and early spring when these lines are most needed has a worth that cannot be calculated in terms of money. Values such as these more than justify the effort, time, and money annually expended on the program.

ACKNOWLEDGMENTS

The development of the method in its present form is the result of the contributions of many, rather than the effort of any one individual. The Traffic Paint Committee solved many knotty problems of administrative and procurement policy through constructive discussion at frequent meetings during the first year and at later ones as the occasion de-

manded. Most of these meetings were attended also by other representatives of the various departmental divisions involved, who contributed many valuable suggestions and ideas to the work of the group. Those deserving special mention are P. H. Anderson, Deputy Director, Purchasing Division of the State Department of Administration; H. G. Bauerle, Assistant Traffic Engineer, Planning and Traffic Division; and W. J. Larkin, Traffic Sign Superintendent, Maintenance Division.

Individual credit should be given also to W. W. McLaughlin, Testing and Research Engineer, who proposed the concept of an integrated performance rating; to William Martin, Chemical Testing Engineer, who conceived the idea of metering the paint by direct displacement in the striping machine; and to Frank Ballew, Equipment Inspector of the Maintenance Division, who designed and built the first one used; to M. G. Brown, Chemical Research Engineer, who completely redesigned and rebuilt the machine in 1954 to make it more versatile; to B. W. Preston, Physical Research Engineer, for his painstaking work in photometry and colorimetry; and to P. F. Biefeld, Chemical Research Engineer, who supervised the work in absorption spectroscopy and analytical chemistry.

It is a pleasure also to acknowledge the helpful advice of E. A. Finney, Research Engineer, under whose general supervision the work was performed.

REFERENCES

1. Pocock, B. W., "Measuring Traffic Paint Abrasion with Beta Rays," ASTM Bulletin, No. 206, May, 1955, p. 55.
2. Hill, J. M., and Ecker, H. W., "A Direct Reading Portable Photoelectric Photometer for Determining Reflectance of Highway Centerlines," ASTM Bulletin, No. 159, July, 1949, p. 69.

APPENDIX

SPECIFICATIONS FOR WHITE AND YELLOW TRAFFIC PAINT

1. Scope

These specifications cover white and yellow traffic paint to be used with glass beads for reflectorization. The paint may be furnished by the vendor in one of the following ways:

1. Paint only. Entire bead complement to be provided by the Michigan State Highway Department.
2. Paint containing no beads. Entire bead complement to be furnished by the paint vendor.
3. Paint with beads premixed. Supplementary drop-in beads to be provided by the Michigan State Highway Department.
4. Paint with beads premixed. Supplementary drop-in beads to be furnished by the paint vendor.

2. General Requirements

(a) It is the intent of these specifications to procure for use by the department the most efficient traffic paint possible, per unit cost with regard to service, which includes daytime apperance, night visibility, and durability. The composition of the paint shall be left entirely to the manufacturer, and it is his responsibility to formulate and produce a paint meeting the requirements specified herein.

(b) The paint shall be ground to a uniform consistency, and it shall be capable of easy and satisfactory uniformity of application by the pressure-spray type of painting machine currently in use by the department. The paint shall be furnished ready for use without thinning or other modification and shall not settle badly, cake, curdle, liver, gel, or show excessive increase in viscosity in the container during a period of one year after manufacture and shall be capable of being broken up with a paddle to a smooth uniform consistency. Paint furnished under these specifications may be rejected if it contains water, skins, thickened or jelly-like layers or lumps, coarse particles, dirt or other foreign material.

(c) Production of traffic paint for department use shall be in batches of not less than 1000 gallons each. A batch shall be considered as all finished material which was manufactured simultaneously or continuously as a unit between the time of compounding and the time of packing or placing in shipping containers. Deliveries of finished paint shall be made at the times and points specified in the purchase order and, unless otherwise specified, the total time required to complete the order shall not exceed 90 days. Records shall be kept by the vendor as to the number of containers of each batch shipped to each delivery point and a list of all such shipments during each calendar week shall be furnished the department at the end of each week throughout the production period until the entire order is completed.

(d) All samples submitted for performance tests shall meet the specific requirements of Section 3, paragraphs (a), (b), (c), (d) and (e) for color, consistency, drying time, bleeding, and settling before being approved for evaluation in the field tests.

3. Specific Requirements

(*a*) *Color*. For the white paint, the luminous directional reflectivity shall be not less than 80 percent relative to magnesium oxide. For yellow paint, the color shall match the standard shade within the green and red tolerance limits when compared with "Standard Color Chips for Highway Signs (January, 1939)," obtainable from the United States Bureau of Public Roads, Washington, D. C.

(*b*) *Consistency*. The finished paint shall have a viscosity in Krebs units as determined in the Krebs-Stormer Viscometer at 77 F as follows:

	Min.	Max.
Paint to be used without premixed beads	65	80
Paint containing premixed beads as received	75	95
Paint to be used with premixed beads, beads added	75	95

While the viscosity of the original test sample of paint may be anywhere within the range stipulated in this paragraph, the viscosity of all paint purchased on the basis of these performance tests for regular use by the department shall be within plus or minus 5 Krebs units of that of the original test sample throughout the production of the entire order, with the further requirement that such range in viscosity be entirely within the above limits.

Paints intended to be used with premixed beads will be tested for viscosity with the prescribed quantity of beads premixed, whether or not such paints contain premixed beads as received.

(*c*) *Drying Time*. The paint when applied to a concrete or bituminous pavement surface under normal field conditions at the required rate and at air temperatures between 60 and 80 F and relative humidities less than 60 percent shall dry sufficiently hard within 60 minutes after application so that there will be no pick-up, displacement, or discoloration under traffic.

(*d*) *Bleeding*. When tested and evaluated on both tar and asphalt substrates in accordance with Methods D 969-52T and D 868-48 of the American Society for Testing Materials, the numerical rating of degree of bleeding for both white and yellow paints shall be not less than 4. Paints intended to be used with premixed beads will be tested for bleeding with the prescribed quantity of beads premixed, whether or not such paints contain premixed beads as received.

(*e*) *Settling*. When tested and evaluated in accordance with Method D 869-48 of the American Society for Testing Materials, the numerical rating of degree of settling for both white and yellow paints shall be not less than 6. All paints will be tested for settling in the as-received condition, whether or not they contain premixed beads.

(*f*) *Weight per Gallon*. Weight per gallon of all paint purchased on the basis of these performance tests for regular use by the department shall be within plus or minus 0.25 pound of that of the original test sample.

4. Samples for Performance and Preliminary Laboratory Test

Samples of 100 gallons each of the paints which he proposes to furnish will be purchased from each prequalified prospective vendor. Such samples may be furnished in any standard paint containers of not less than 5 nor more than 30 gallons capacity, except that 5 gallons of each sample shall be packaged as follows: 2 gallons in 1-quart cans (total, 8 quarts), and 3 gallons in 1-pint cans (total, 24 pints). Each manufacturer or vendor may submit only one sample each of white and yellow paint for test.

5. Service Test

(*a*) *Application*. The test stripes shall be 4 inches in width and applied both longitudinally and transversely. Application in longitudinal stripes will be by regular painting crews using routine department methods and standard pavement striping equipment. Application in transverse stripes will be by selected personnel under the supervision of the Research Laboratory of the Testing and Research Division, using equipment the same as, or similar to, that used in the normal application of these materials.

For tests of transverse stripes, the paint shall be applied to four sections of highway, two of which have a concrete surface and the other two a bituminous surface. The sections selected shall be areas where traffic is heavy and wear is uniform with full exposure to the sun throughout the daylight hours. The test areas shall be laid out where traffic is free-rolling, and with no grades, curves, intersections, or access points near enough to cause excessive braking or turning movement.

In the transverse test sections, at least three lines of each sample shall be applied in such order that differences due to position and time of day when placed will be compensated for.

The paint shall be applied at the rate recommended by the manufacturer within plus or minus 5 percent as determined by quantitative measurements made of the area of line applied per unit volume of material. If no rate is specified by the manufacturer, the paint will be applied at the rate of 16.5 gallons per mile of 4-inch continuous stripe (wet film thickness of 15 mils).

(*b*) *Evaluation*. The ease and uniformity of application, covering properties and drying time will be determined at the time paints are applied on the road and the comparative results obtained on these properties of the various paints will be taken into consideration in the final evaluation.

Unless otherwise specified, the longitudinal stripes will be used to evaluate handling and application characteristics, and the transverse stripes to evaluate performance in service of the paints included in the test.

The identification or source of supply of any paint under test shall be unknown to any individual engaged in the testing or participating

in the judging except by a code identification number.

Periodic inspections of the paints at approximately 3-month intervals will be made for one year after application by a committee of four consisting of one representative each from Planning and Traffic, Maintenance, and Testing and Research Divisions of the Highway Department and one from the Purchasing Division of the Department of Administration.

Evaluation of service will be based on apperance, durability and night visibility as defined in article (c) of this section.

The test lines will be rated numerically from very poor to perfect, using numbers of 0 to 10; with number 10 indicating perfect condition and 0 complete failure.

(*c*) *Definitions.*

Appearance. This is the complete impression conveyed when the painted surface is viewed at a distance of at least 10 feet before any detailed inspection has been made, and is estimated purely in terms of satisfactory or unsatisfactory appeal to the observer. It also includes a comparison of the color of the surface under consideration with the original color, taking into account changes due to yellowing, darkening, fading, dirt collection, mold growth, etc. The determination is to be made without preliminary washing or other modification of the surface of the test lines.

Durability. The factor used in rating film failure is equal to $\frac{1}{10}$ of the percentage of material remaining on the pavement when examined closely by the unaided eye, this determination to be made in each wheel track in an area extending 9 inches each side of the point of greatest wear. Percentage of paint remaining on the pavement will be considered as the percentage of the prescribed area of test stripe in which the substrate is not exposed.

Night Visibility. Night visibility designates the apparent brightness when examined at night under tungsten illumination from the side of the road, with eye and light source separated by a distance which corresponds to a divergence or viewing angle of approximately $\frac{1}{3}$ degree. Photometric readings may be substituted for the visual comparison at the option of the department, the rating being based on a factor of 10 for the highest reading and 0 for complete failure. Night visibility determinations will be made on the same areas as those used for rating durability.

Weighted Rating. The three qualities just defined are not considered of equal importance and the numerical ratings will be combined to produce a weighted rating defined as follows:

$$\text{Weighted rating} = 0.10A + 0.40D + 0.50N$$

where: A = appearance rating (including color retention)
D = durability rating, and
N = night visibility rating

Service Factor. Service factor is defined as the sum of the products of the average weighted rating for each time interval between evaluations and the time of the interval in days, and this sum divided by 100.

Mathematically it is expressed as

$$\text{Service Factor} = \frac{r_1t_1 + r_2t_2 + r_3t_3 + r_4t_4}{100}$$

where r_1, r_2, etc. are the average weighted ratings for the time intervals t_1, t_2, etc. in days between successive evaluations.

(*d*) *Final Evaluation.* At the end of one year after application of the test stripes, a final evaluation will be made and the service factor for each paint determined. The average of the figures of performance for all four test sections arrived at by all four observers of the committee will be used to determine the final figure of performance or service factor for each paint sample.

(*e*) *Other Tests.* The department reserves the right to conduct whatever other tests are deemed necessary to determine the quality of the paints under consideration.

6. Bids

All vendors whose samples receive a satisfactory rating will be given an invitation to bid. Each bidder will be required to file an affidavit that the material which he proposes to furnish will be identical with that of the sample submitted for performance tests. When these bids are received, they will be evaluated on the basis of cost per mile per unit of service, using the vendor's recommended rate of application for the purpose of calculating cost per mile. The contract will then be awarded to the lowest responsible bidder on this basis.

7. Packing and Marking

All containers shall be filled by weight in the following manner: The weight per gallon of the paint shall be accurately determined at 77 F and the container shall be so filled that the net weight of the material in the container shall be the product of the weight per gallon at 77 F and the stated number of gallons in the container.

Unless otherwise specified, paint purchased under these specifications for regular use by the department shall be shipped in clean open-head steel drums of 30 gallons capacity, sealed vapor proof. Each container shall be plainly marked, both on the head and side, with a durable, weather-resistant ink or paint, showing the name and address of the manufacturer or vendor, description of material, purchase order number, batch number, and volume and weight of contents.

8. Sampling and Testing

(a) Paint purchased under these specifications will be sampled and tested by department methods, including absorption spectroscopy, to determine conformance with specification requirements and to establish identity with the sample originally submitted for performance

tests. A sample shall consist of 4 pints taken from each production batch of 1000 gallons or more. When sampled at the plant from vats, ⅓ of the sample shall represent the material coming from the vat at the beginning of the pour, ⅓ shall represent the material coming from the vat at the middle of the pour, and ⅓ shall represent the material coming from the vat at the end of the pour. If the paint is in containers, a 4-pint sample shall be taken at random from a single container in each batch.

(b) The department shall have the right to inspect the manufacture and packaging of the paint furnished under the contract at any time during its production. The manufacturer or seller of the paint shall notify the department of his intention to manufacture the paint at least five days before beginning production. When inspection is made at the plant during manufacture, the vendor shall furnish the representative of the department free access to all such parts of the plant as concern the manufacture of the paint, and shall furnish every reasonable facility for proper inspection.

When materials are inspected or sampled during manufacture, the department shall have the right to require the manufacturer or seller to withhold shipment of the paint until any or all tests have been conducted. In general, the time required before test results can be reported will be three weeks.

9. Acceptance and Rejection

Paint furnished under the contract shall be identical with the sample submitted for performance tests and shall comply with the requirements herein set forth. In the event that the traffic paint does not comply with these specifications or is not identical with the sample submitted, the vendor will be required to replace all such paint at his own expense, including all handling and transportation charges, with paint that does so comply.