Application of the Modulus of Passive Resistance of Soil in the Design of Flexible Pipe Culverts

M. G. SPANGLER, *Research Professor of Civil Engineering, Iowa State College, and*
JAMES C. DONOVAN, *Captain, Corps of Engineers, U. S. Army.*

Between 15 and 20 years ago the Iowa Engineering Experiment Station, in cooperation with the Bureau of Public Roads, conducted an extensive experimental research program directed toward the development of a rational method for determining the probable deflection of a flexible pipe culvert under an earth embankment. These experiments provided the basis for development of an hypothesis relative to the magnitude and distribution of the forces acting on this type of structure.

The lateral pressures observed in the experimental work were found to be proportional to the horizontal deflection of the pipe sides. This proportionality factor was called the modulus of passive resistance of the enveloping soil. By multiplying one-half the horizontal deflection of the pipe by the modulus of passive resistance of the soil, the maximum unit pressure at the ends of the horizontal diameter was quantitatively expressed. The pressure above and below this point decreased parabolically to zero at points on the arc 50 deg. above and 50 deg. below the horizontal diameter.

With this load hypothesis established, it was possible to analyze a flexible culvert pipe as an elastic thin ring and develop a prediction equation for the pipe deflection in terms of the earth load, the dimensions and elastic properties of the pipe and the modulus of passive resistance of the soil.

The potential usefulness of this prediction equation has been seriously hampered by the lack of knowledge concerning the modulus of passive resistance of soil. This paper describes a preliminary attempt to measure this property of soil in the laboratory. The apparatus used and the experimental procedures employed are described. The correlation between measured values of the modulus and some properties of the soils used, particularly density, are presented, together with some qualitative comparisons with estimated values of the modulus in both experimental and actual culverts under embankments.

● A FLEXIBLE PIPE culvert under an embankment load depends to a very great extent upon the passive resistance pressure of the enveloping soil for its ability to support the vertical load to which it is subjected. Increments of the vertical load and reaction cause the flexible pipe to deform; the vertical diameter shortens and the horizontal diameter lengthens. The outward movements of the sides of the pipe as deformation progresses mobilize passive resistance pressures of the soil, and the pressures increase as the horizontal diameter increases. These pressures combine with the inherent strength of the pipe and greatly augment the load carrying capacity of the structure. The relationship between movement and developed pressure is called the modulus of passive pressure and is expressed as unit pressure per unit of movement, such as pounds per square inch per inch.

Early and somewhat fragmentary observations of the performance of flexible culvert pipes under embankments indicated that the value of this modulus is roughly constant as the horizontal deflection of the pipe increases under an in-

creasing height of fill. These observations also indicated that the value of the modulus is a function of the kind of soil at the sides of the pipe and its condition, particularly its density. For example, in some early experiments (*2*) on pipes under a sandy clay loam fill the modulus varied from 12 to 15 psi per in. when the side-fill material was simply shoveled into place with no attempt made to compact it. When this same soil was compacted in a dry state by means of hand tampers, the value of the modulus increased to 25 to 29 psi per in., or practically double the value in the loose uncompacted state. In another similar experiment using a pit-run gravelly soil in a loose, shovel-placed condition, the value of the modulus ranged from 28 to 35 psi per in.

In an experimental study of an actual 84-in. corrugated metal pipe culvert under a fill of 137 ft, Timmers (*4*) reported that the fill material was a "crumbly friable sandstone" which had been blasted and crushed by rolling equipment, and that it was compacted to a dry density slightly greater than 100 percent of Proctor density. An indirect estimate (*3*) of the modulus of passive resistance of this soil indicated a value in the neighborhood of 190 psi per in.

These and other observations and estimates of the value of this modulus have indicated the very wide range of possible values and the need for more detailed knowledge of the quantitative relationship between soil properties and the modulus. The purpose of this paper is to describe a preliminary apparatus which has been designed to measure the modulus of passive pressure of soil in the laboratory, with the ultimate objective of developing a table showing the relationship between the modulus and various textural classes of soil in various states of density and degree of saturation. Such a tabulation would be of value in making prediction estimates of the deflection of flexible pipe culverts under earth fills.

Before describing the apparatus used and the preliminary experiments, a brief review of the development of an equation (*2*) for the deflection of a flexible pipe culvert will be given. The vertical load on a pipe under an embankment was assumed to be uniformly distributed over the top 180 deg. of the pipe and the equal and opposite vertical reaction to be uniformly distributed over the width of bedding of the pipe. Horizontal pressures on the sides of the pipe were assumed to be distributed parabolically over the middle 100 deg. on each side and the maximum unit pressure at the ends of the horizontal diameter to be equal to the modulus of passive pressure multiplied by one-half of the horizontal deflection of the pipe. The pressure distribution according to this hypothesis is shown in Figure 1. An elastic analysis of the ring acted upon by this load system resulted in the deflection formula.

$$\Delta x = \frac{KW_c r^3}{EI + 0.061\ er^4} \qquad (1)$$

in which

Δx = horizontal deflection of pipe, in. (vertical deflection is essentially the same);
K = bedding constant which depends on the width of bedding of the pipe;
W_c = vertical load on pipe, lb. per lin. in.;
r = mean radius of pipe, in.;

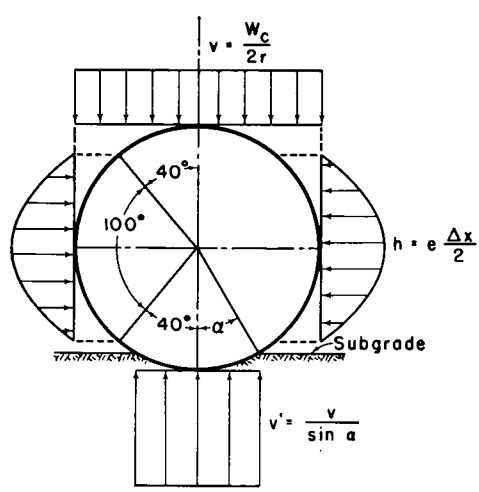

Figure 1. Distribution of pressure around a flexible pipe under an earth fill.

E = modulus of elasticity of pipe metal, psi;
I = moment of inertia of cross-section of pipe wall, in.^{4} per in.; and
e = modulus of passive pressure of sidefill soil, psi per in.

Eq. 1 may need to be empirically modified in some cases to obtain the long time deflection of a pipe by multiplying it by a deflection lag factor, since under some conditions such as low density of the sidefill soil, it has been observed that deflections may continue for a long period of time after the maximum vertical load has developed on the pipe.

Examination of Eq. 1 reveals the important influence of the modulus of passive resistance of the sidefill soil on deflection particularly in the case of larger diameter pipes, since the second term in the denominator normally increases more rapidly than the first as diameter increases. This relationship is a qualitative indicator of the need for careful selection, placement and compaction of soil at the sides of a flexible pipe culvert in order to hold the pipe deflection to an acceptable maximum. It also dictates the need for more complete knowledge of the influence of soil characteristics and properties on the modulus of passive resistance of the soil. The potential usefulness of Eq. 1 is greatly restricted by present lack of knowledge in this regard.

The apparatus used in these preliminary trials consisted of a steel cylinder 12 in. in diameter and 14 in. long (Figure 2). One end of the cylinder was closed by a gasketed steel bulkhead. A pressure gage was attached to the bulkhead and inlet and outlet pipes with stopcocks were provided. The other end was fitted with a steel bulkhead in which 16 holes, ½-in. diameter, were drilled. A rubber diaphragm was secured over this bulkhead by means of a peripheral ring and stud bolts. When air pressure was introduced into the cylinder, the rubber diaphragm bulged outward to a shape approximating a segment of a sphere.

The modulus of passive resistance of soil is a property similar to Westergaard's modulus of subgrade reaction and Cummings' modulus of foundation. It is a proportionality constant between movement of an actuating element and pressure developed by the soil in resistance to the movement. A unique characteristic of the modulus of passive resistance, as used in connection with culvert design, is associated with the boundary conditions as the actuating element moves

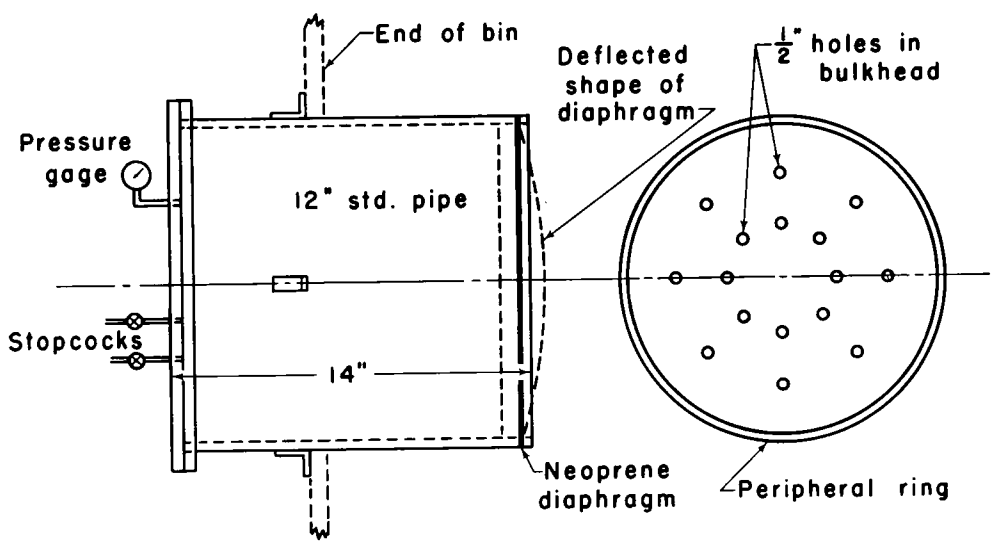

Figure 2. Diagram of apparatus.

against the soil. A flexible pipe under load deforms from an approximate circular shape to an ellipse and the pressure develops as the sides move outward during this change in shape. Thus there are no abrupt edge discontinuities involved, and the experimental apparatus was designed to comply with this condition, thereby eliminating some of the difficulties associated with determining the subgrade modulus by means of plate bearing tests.

The apparatus was mounted through a hole in the center of one end of a bin, with the rubber diaphragm end extending about 8 in. inside the bin which was 50½ in. wide and 30 in. deep. The length of the bin was varied in the experiments by means of a movable plywood bulkhead which was placed at distances of 12, 24 and 36 in. from the rubber diaphragm. The device was anchored to one end of the bin by means of angle lugs. The soil to be tested was placed in the bin at a known density, which was varied over a wide range in the individual trials. After the soil was in place, air pressure was introduced into the cylinder by means of a bicycle pump. This caused the rubber diaphragm to expand outward against the soil, thus mobilizing the passive resistance pressure. The outward movement of the center of the diaphragm was measured for each increment of air pressure and this movement divided into the unit pressure gave the modulus of passive pressure of the soil in pounds per square inch per inch.

The arrangement for measuring the outward movement of the diaphragm consisted of a ¼-in. pipe embedded in the soil, beginning about 2 in. in front of the diaphragm and extending through the opposite end of the bin. A 3/16-in. steel rod extended through this pipe and terminated in a steel disk which rested against the center of the diaphragm. The opposite end of this rod actuated an Ames dial which was securely mounted independent of the soil bin. Figures 3 and 4 show the general arrangement of the apparatus. Figure 4 shows the spherical-shaped cavity in the soil caused by the deflected diaphragm after a test run.

Three different types of rubber diaphragms were used: 1/32-in. neoprene, 1/16-in. neoprene and No. 30 gage pure gum rubber. The last material offered almost no resistance to deflection and very little air pressure was required to

Figure 3. Soil pressure apparatus in position.

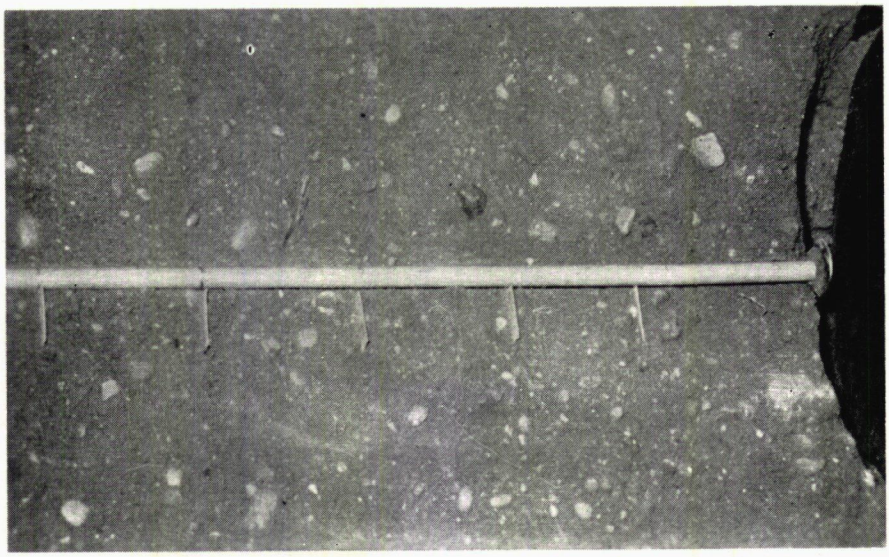

Figure 4. Soil partially removed from bin following test; metal plates show permanent deformation of soil.

bulge it outward when not in contact with the soil. However, it was not sufficiently rugged and was easily cut by the aggregate in the soil. The 1/16-in. neoprene sheet was very rugged and abrasion resistant, but it offered considerable resistance to deflection and it was necessary to correct the actual deflection readings to account for the stiffness of the diaphragm. Moreover, the stiffness changed after stretching and it was necessary to calibrate the diaphragm and correct the deflection readings after each trial with this thickness of neoprene. The 1/32-in. neoprene provided a compromise between the necessary ruggedness and flexibility and was the most satisfactory.

Two samples of soil were used in the experiments. These were both fairly well graded soils of the A-1 classification. Physical properties of the materials are shown in Table 1.

In preliminary trials of the apparatus, it was found that the soil continued to deform slowly for a considerable period of time after an increment of air pressure was applied. A uniform time period between application of a pressure increment and measurement of deflection was adopted for each of the actual experiments. This time period varied from 1 minute for low density soils to 5 minutes in the case of the high density soils.

An attempt was made to measure the distance residual deformations extended into the soil mass. Marks were etched on the ¼-in. pipe in which the deflection measuring rod operated, at 5, 8, 11, 14, 17, 20 and 23 in. from the rubber diaphragm. When the soil was placed in the bin, a 1-in. sq metal plate was placed in a vertical position at each of the marks. After a test was completed, the position of these plates relative to the correspond-

TABLE 1
PROPERTIES OF GRAVELLY SANDY LOAM SOILS

Soil No.	Size Fractions*, %				LL	PI	Proctor Density, pcf	Optimum Moisture, %
	Gravel	Sand	Silt	Clay				
1	40	43	9	8	22	4	130.6	9.2
2	17	56	14	13	19	2	130.1	11.2

* Gravel, 2.0 mm; sand, 2.0 to 0.074 mm; silt, 0.074 to 0.005 mm; and clay, 0.005 mm.

ing marks was measured. The plates and etch marks are visible in Figure 3. This procedure was successful in two trials where the soil was not compacted, but was not successful in three other trials, due to displacement of the metal plates during compaction of the soil. The decay of the residual deformation in the soil in trials 14 and 15, determined in the above manner, is shown in Table 2.

TABLE 2
RESIDUAL DEFORMATION OF SOIL

Trial No.	Max. Defl. of Diaphragm, in.	Distance from Diaphragm to Plate, in.						
		5	8	11	14	17	20	23
14	1.29	0.42	0.15	0.10	0.09	0.13	0.10	—
15	1.39	0.66	0.21	0.15	0.09	0.07	0.05	0

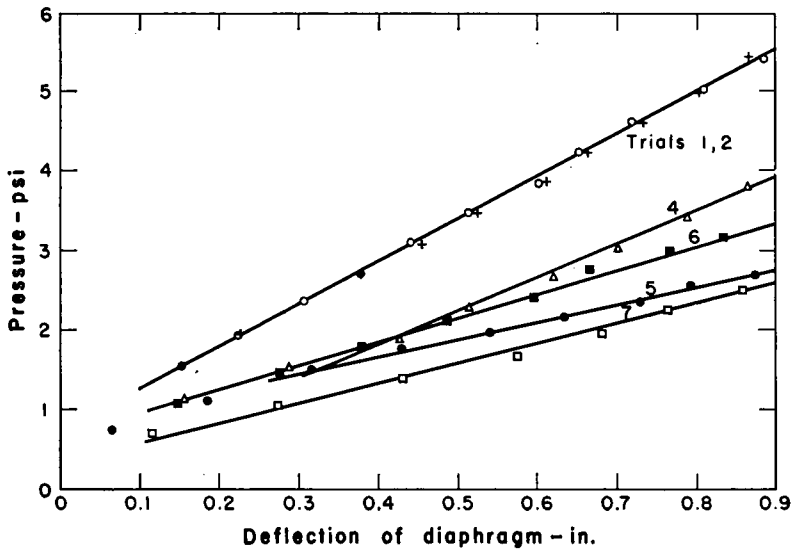

Figure 5.

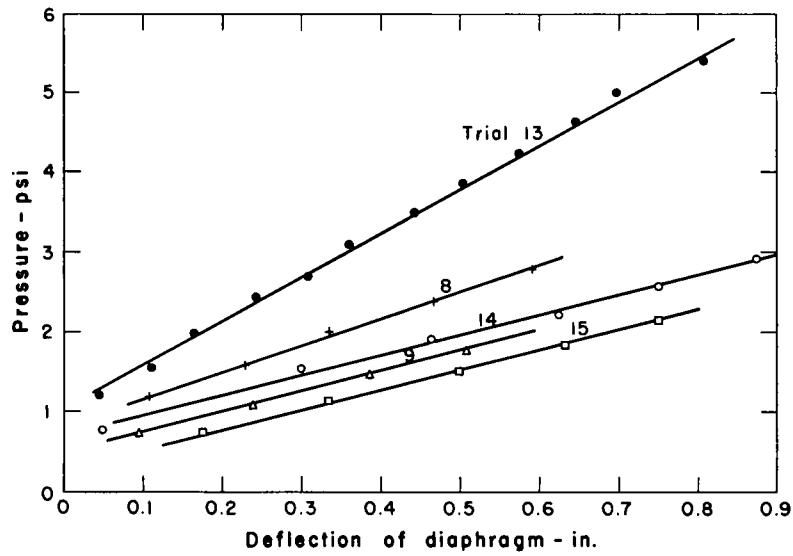

Figure 6.

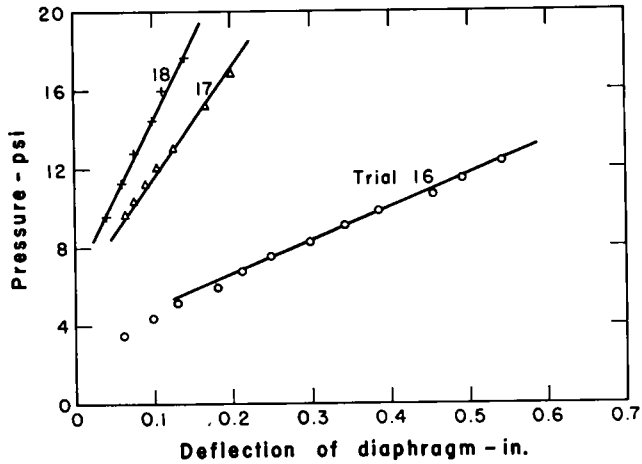

Figure 7.

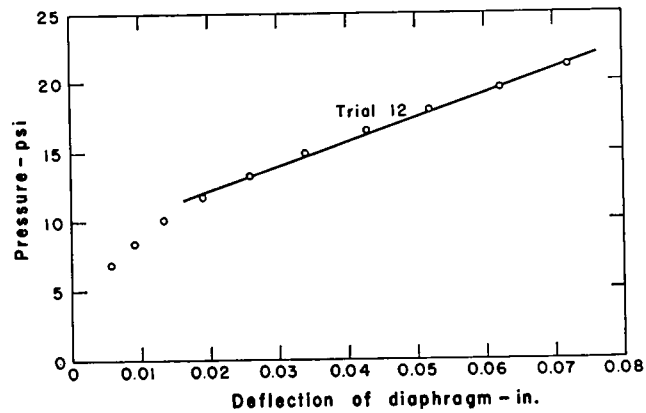

Figure 8.

The relationships between applied pressure and deflection for 17 of the 18 test runs made with this apparatus are shown in Figures 5 to 8. Test 3 was discarded because the rubber diaphragm broke before sufficient deflection had occurred to give a reliable result. These graphs show a straight line relationship between pressure and deflection, but the lines do not pass through the origin, there being an initial curve in the graphs at very low deflections. The significance of this initial curvature is not understood. Whether it is caused by some detail of the apparatus or the test procedure, or whether it is an inherent characteristic of the relationship is not known. In this report, the slope of the straight line portion of the graph has been taken as the modulus of passive pressure of the soil. The pertinent data from the tests are shown in Table 3.

Perhaps the most significant result of these pioneer experiments is the demonstration of the important influence of soil density on the modulus. The need for good soil compaction at the sides of flexible pipe culverts to increase the load carrying capacity of the pipe has long been recognized in the flexible pipe industry, as the result of experience and observation. The results of these tests

TABLE 3
TEST DATA

Trial No.	Diaphragm	Length of Bin, in.	Deflection of End Bulkhead, in.	Dry Density, pcf.	Percent of Proctor	Moisture Content, %	Modulus of Passive Pressure, psi/in.
			Soil No. 1				
1	1/32" N	24	—	97.1	74.4	6.9	5.3
2	1/32" N	12	—	95.4	73.0	6.2	5.4
3	1/32" N		Diaphragm broke				
4	1/16" N	36	0	91.9	70.3	6.2	4.2
5	1/16" N	36	0	95.0	72.7	6.5	2.1
6	1/16" N	24	0.002	95.7	73.3	6.5	2.9
7	Gum*	24	trace	86.8	66.5	6.8	2.7
8	1/32" N	24	0.003	91.0	69.7	6.4	3.3
9	1/32" N	24	0.005	94.6	72.5	6.6	2.6
10	1/32" N	24	0.010	103.4	79.4	8.3	15.5
11	1/32" N	24	0.003	113.7	87.0	8.2	30.0
12	1/32" N	24	0.005	122.0	93.5	7.4	175.0
			Soil No. 2				
13	1/32" N	24	0.037	85.6	65.8	7.1	5.5
14	1/32" N	24	0	77.0	59.2	7.8	2.6
15	1/32" N	24	0.003	77.7	59.7	7.1	2.5
16	1/32" N	24	0.007	95.6	73.5	8.1	16.4
17	1/32" N	24	0.004	108.9	83.6	9.0	51.0
18	1/32" N	24	0.005	111.2	85.5	9.2	79.0

* No. 30 gage pure gum rubber.

are in harmony with this experience and provide a quantitative relationship between degree of compaction for the two soils tested and the modulus of passive pressure.

The modulus is plotted against percent of Proctor density in Figure 9. It appears that for densities below about 75 to 80 percent, the modulus of soils of this character is purely nominal and that they would contribute very little to the supporting strength of flexible pipes when in this condition. However, for densities greater than about 75 to 80 percent the modulus increases very rapidly and in the range above 90 percent the influence of the sidefills would be very great. This indication appears to be in harmony with Timmers (4) observations in Cullman County, Alabama, where an 84-in. corrugated metal pipe culvert under 137 ft of fill, composed of crumbled sandstone

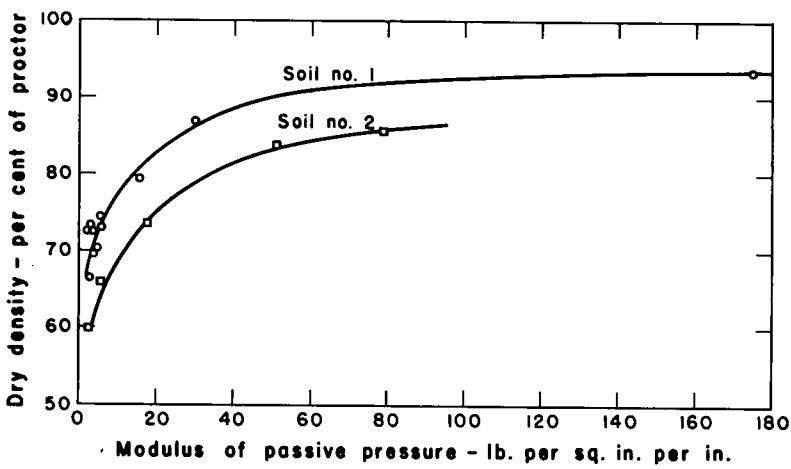

Figure 9.

soil compacted to 100 percent Proctor density, deflected less than 1 in., indicating that the soil possessed a very high modulus of passive pressure.

The authors are fully cognizant of the fact that further work should be done before results of tests of this kind can be applied directly to flexible pipe culvert design. The influence of the size and shape of the apparatus and of the soil bin in which it is mounted and the effect of increasing vertical pressure on the soil mass should be studied. Also, extensive correlation between laboratory determined values of the modulus and actual values which develop in field installations should be carried out. However, the authors believe that the general principle employed in these tests is sound and that further work of this kind can contribute important increments of knowledge in connection with flexible pipe culvert design.

REFERENCES

1. DONOVAN, JAMES C., Laboratory Investigation of the Modulus of Passive Pressure of Soils. Unpublished Thesis, Library, Iowa State College. 1956.
2. SPANGLER, M. G., The Structural Design of Flexible Pipe Culverts. Bul. 153, Iowa Engineering Experiment Station, Ames, Iowa. 1941.
3. SPANGLER, M. G. AND DONALD L. PHILLIPS. Deflections of Timber-strutted Corrugated Metal Pipe Culverts under Earth Fills. Bul. 102, Highway Research Board, p. 12. 1955.
4. TIMMERS, JOHN H. Load Study of Flexible Pipes under High Fills. Bul. 125, Highway Research Board, p. 1. 1956.

DISCUSSION

DONALD N. BROWN, *Engineer, Soils Division, U. S. Army Engineer Waterways Experiment Station, Vicksburg, Miss.* — This paper presents very interesting results of a type urgently needed. The stated objective of the investigation reported is development of a table giving values of the modulus of passive resistance for various classes of soils in various states of density and degree of saturation. This is an undertaking of considerable magnitude. Many data from tests of the type proposed will be required before reasonable values of the modulus of passive resistance for use in Eq. 1 can be selected with confidence. It will quickly become apparent that a better understanding of the stresses, strains, and displacements which occur in soil masses surrounding buried conduits is necessary before a completely rational method of design for flexible pipe culvert can be developed. In the meantime, the only alternative is development of empirical or semi-empirical design methods. Empirical methods require large quantities of validating data. These can only be obtained from numerous time-consuming tests such as the ones discussed in this paper.

It appears that the "modulus of passive resistance" and the "coefficient of horizontal subgrade reaction" discussed in a recent paper by Terzaghi[1] are one and the same. Both give a relationship between movement and pressure developed by this movement. The value of either one is dependent on the elastic properties of the soil, on the dimensions, shape, and size of the area on which the pressure acts, and on depth if the soil is a cohesionless material. In view of this similarity between the modulus of passive resistance and the coefficient of horizontal subgrade reaction, the straight-line relationship between pressure and deflection is remarkable and indicates that application of theories involving the coefficient of horizontal subgrade reaction to the problem of determining reasonable values of the modulus of passive resistance might result in reduction of the number of tests required to accomplish the authors' purpose.

[1] Terzaghi, Karl, "Evaluation of Coefficients of Subgrade Reaction." *Geotechnique*, pp. 297-326 (1955).

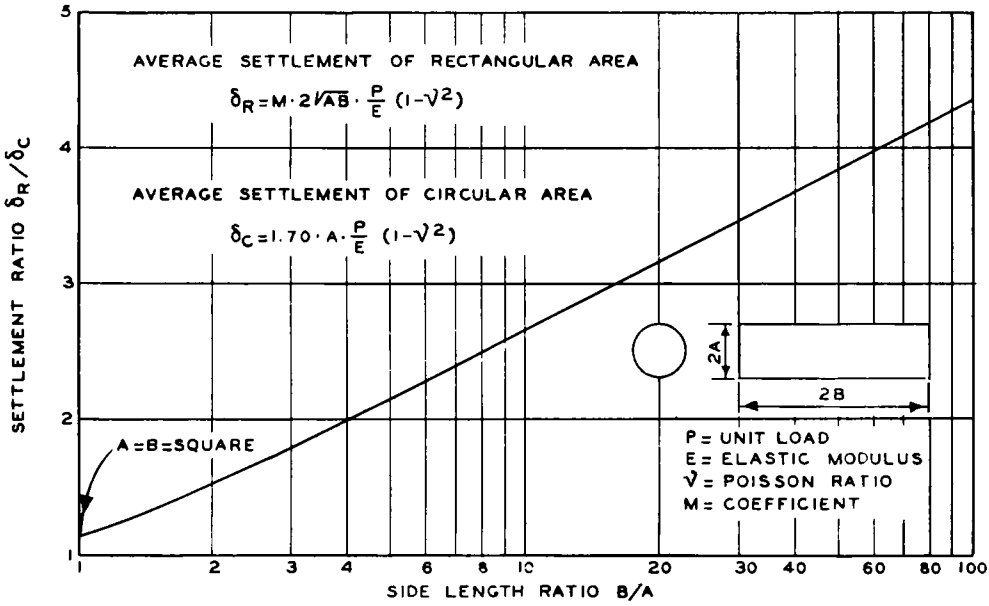

Figure 10. Ratio of settlements of rectangular and circular areas with equal uniform loads.

The effect of size and shape of the diaphragm on measured deflection should perhaps be investigated further before final selection of test apparatus. The pressure resulting from deflection of a flexible pipe culvert acts on a rectangular (half-cylinder) area and yields a quite different pressure-deflection relation than does the circular area used in these preliminary tests. The theoretical relationship between average settlements of rectangular areas and a circular area with the same unit load and a diameter equal to the width of the rectangles is shown in Figure 10. According to theory, the ratio between these settlements continues to increase with increasing length of the rectangles; but in practice the ratio will probably approach a limiting value which can be determined experimentally. The maximum instead of the average settlements are measured in the experiments, but the ratios between maximum settlements in rectangular and circular loaded areas are very nearly equal to the ratios between the average settlements.

The authors state that the soil continued to deflect slowly for a considerable period after application of pressure, as would be expected. Because the ultimate deflection will govern the lateral pres-

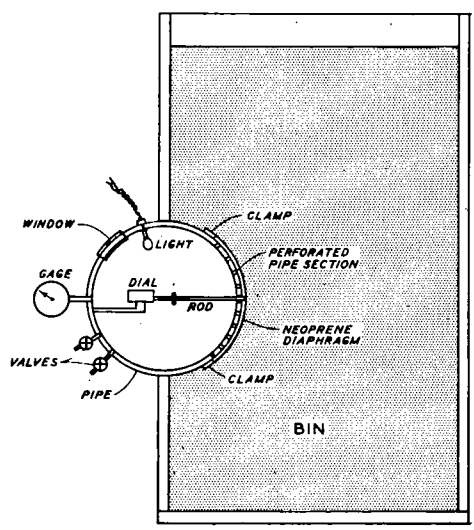

Figure 11. Suggested arrangement of test apparatus.

sure against the flexible pipe culvert, it appears that a time period of 1 to 5 minutes between application of the pressure and measurement of deflection might be too short, particularly for plastic materials. This delayed deflection could be studied in a manner similar to that of a consolidation test. This would permit better evaluation of the "lag factor" in Eq. 1.

The cause of the initial curvature of the pressure vs. deflection graphs should be investigated. It is possible that the ¼-in. rod embedded in the soil in front of the diaphragm develops a friction loading which must be overcome before any appreciable deflection of the diaphragm takes place.

A test arrangement suggested by M. J. Hvorslev to simulate the stress concentration during compaction and the deflection of a flexible pipe culvert is shown in Figure 11. The cylinder in the Spangler-Donovan tests has been replaced by a pipe extending along the full length of the bin, and a perforated longitudinal section of the pipe inside the bin is covered with a neoprene diaphragm.