# High-Strength Reinforcing Steels for Concrete Bridges

EIVIND HOGNESTAD AND GEORGE WINTER
*Respectively, Manager, Structural Development Section, Portland Cement Association Laboratories, Skokie, Ill.; and Professor of Structural Engineering, Cornell University, Ithaca, N. Y.*

The use of high-strength deformed bars without prestressing in European concrete structures is reviewed, with particular emphasis on bridge construction. American use of high-strength reinforcement has so far included only buildings. However, ASTM specifications for 60,000- and 75,000-psi yield point reinforcement have recently been issued, and an increasing future use in bridge structures may be expected.

To supplement other research information, chiefly from abroad, on rectangular beams reinforced with cold-twisted steel, 42 T-beams reinforced with metallurgically produced high-strength steels have been tested at Cornell University. To simulate continuity, these were single-span beams with overhangs. Yield points ranged from 84,000 to 103,000 psi. The tests showed that the strengths and deflections of these beams conformed to accepted theories with about the same agreement as for members with conventional strength reinforcement. Crack width at design loads can be held within acceptable limits if adequate attention is given to detailing.

• PROGRESS far beyond most expectations of ten years ago occurred in the 1950's. Pronounced development of American structural concrete technology took place in some six major fields: precasting, prestressing, lightweight aggregate concretes, ultimate strength design, shell structures, and high-strength reinforcement. In American bridge construction only precasting, prestressing and lightweight aggregates have so far played significant parts. Important changes in concrete bridge building techniques of the 1960's may well be related to ultimate strength design and high-strength reinforcing steels.

## TYPES OF HIGH-STRENGTH STEEL

High-strength reinforcing steels for use without prestressing cover a yield-point range of approximately 55,000 to 120,000 psi. Figure 1 compares the range of tensile properties to intermediate grade bars and to prestressing strand as commonly used in present American bridge construction. Only rarely can a strain as high as 2 percent be developed in reinforcing steel before the ultimate strength of a reinforced concrete member is reached. Therefore, provided bending properties of reinforcing bars are adequate for fabrication purposes, only the initial parts of the stress-strain curves are significant.

There are two major types of high-strength steels—hot-rolled bars and bars that have been cold-worked and aged after rolling. Typical tensile properties of the two types are shown in Figure 2 for foreign steels as compared to American intermediate grade bars.

The two Swedish bars KAM 40[1] and KAM 60 (Fig. 2a) are typical of hot-

[1] The numerical designations of European steel refer to yield point in kg per sq mm (1 kg per sq mm = 1,422 psi). However, designations for the older plain bars St 37, St 44 and St 52 refer to ultimate strength.

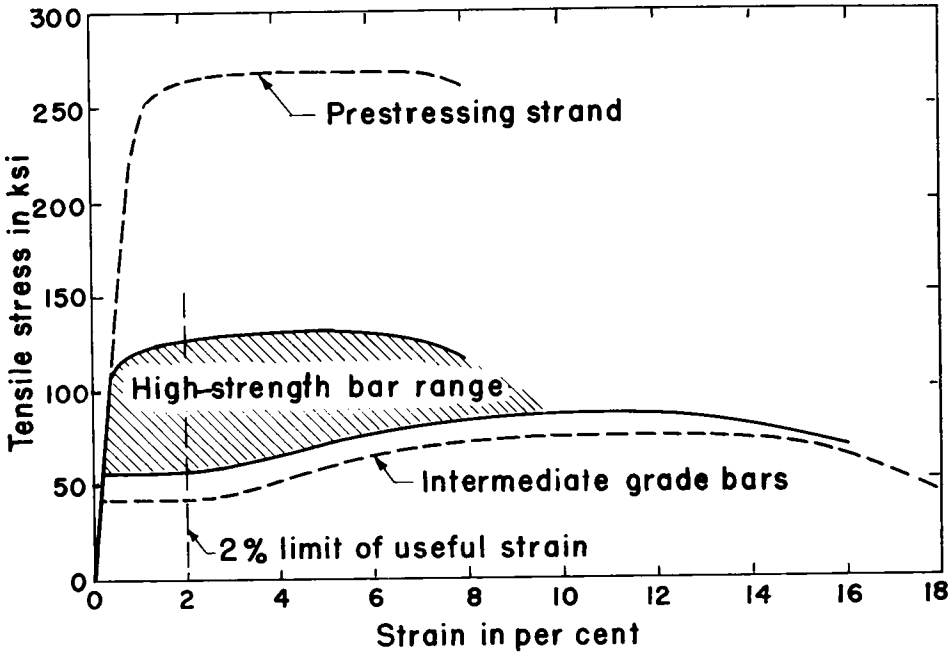


Figure 1. Range of tensile properties for high-strength steels.

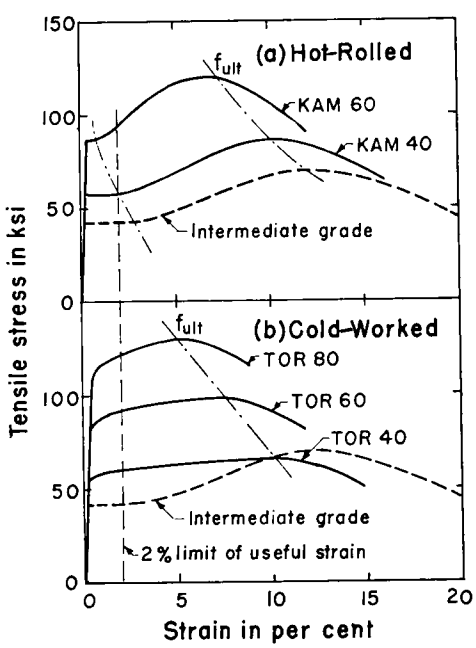


Figure 2. Comparison of tensile properties for hot-rolled and cold-worked steels.

rolled material for which high-strength properties are imparted by small amounts of alloy components, such as silicon and manganese. These naturally hard steels yield sharply at the yield-point stress, and the stress-strain curve usually possesses a yield plateau in which stress is independent of strain. Following such yielding an ultimate strength about 50 percent greater than the yield point is developed. The length of the yield plateau and the strain at ultimate strength both decrease as the yield point increases.

The German-Austrian "TOR"-steels (Fig. 2b) are typical of high-strength steels produced by a combined tension-torsion cold-working process followed by aging. Such material possesses no yield plateau whatever. The stress-strain curves depart from an initial elastic line at about 80 percent of the 0.2 percent offset yield strength, and the ultimate strength is approximately 10 to 15 percent greater than the yield strength.

## DEVELOPMENT OF REINFORCEMENT IN SWEDEN

The difference in stress-strain properties between hot-rolled and cold-worked bars is relatively minor in the useful strain range of 0 to 2 percent; the hot-rolled steels yield sharply, whereas the cold-worked ones yield gradually. A choice between the two should probably be made essentially on the basis of bar manufacturing costs. Cold-worked deformed or twisted bars have been used extensively in Europe, particularly in Germany, Austria, and Switzerland, and to a lesser extent in America; much of the available test data have to do with that type of bar. Recent developments in American metallurgy and in mill rolling techniques have stimulated an increased interest in the hot-rolled bars. As an example of European practice, the development and use of the hot-rolled material in Sweden is emphasized in the following discussion.

The historical development of Swedish reinforcement is outlined in Table 1 (*1*). The mild steel plain bar St 37 dominated Swedish bar use for many years until the grades St 44 and St 52 gradually replaced the mild steel. In 1940, it appeared that St 52 would dominate future concrete constructions. However, the deformed bar KAM 40, with deformations similar to modern American bars meeting ASTM A305, was introduced in 1941; its use increased rapidly until, in the mid-1950's, KAM 40 constituted a major portion of the total Swedish reinforcing bar production. The allowable steel stress widely used for KAM 40 in bridge design is about 30,000 psi.

The deformed bar KAM 60, and the plain bar with special anchorage devices, HJS 70, have recently been used to a considerable extent in bridges, and quite widely in buildings, with allowable stresses from 40,000 to 50,000 psi. The bar KAM 90, which is currently the subject of laboratory investigations, is produced by cold-stretching KAM 60 about 5 percent.

The relative costs per ton of the various steels (Table 1) are based on Swedish costs in January 1958 (*1*). It has been considered in the cost calculations that end hooks are not needed for the deformed bars KAM 40 and KAM 60, but that they are required for plain bars. The cost per ton increases relatively slowly as yield point increases. The cost premium for KAM 60 is 11 percent as compared to St 37, whereas the working stress increases 154 percent. Hence, the cost of reinforcement per unit tensile force, $A_s f_s$, is more than 50 percent lower for KAM 60 than for St 37. Similarly, comparing only the deformed bars, the cost of KAM 60 is more than 20 percent less than that of KAM 40. These cost ratios may, of course, be significantly different in the United States.

The relative costs of reinforced concrete structures depend on many factors in addition to the cost of the reinforcing steel. The reduction in steel area made possible by high-strength reinforcement often permits reduced concrete consumption by a reduction in width of major girders, which in turn also reduces dead loads. On the other hand, the thickness of some members (such as slabs) may be controlled by stiffness requirements. Thus, the cost reductions made possible

TABLE 1

SWEDISH REINFORCING STEELS

| Standard Designation | Surface Form | Yield Point or 0.2% Offset, psi | Max. Allowable Stress, psi | Relative Costs per Ton Fabricated and Placed, % of St 37 |
|---|---|---|---|---|
| St 37 | Plain | 31,000 | 18,500 | 100 |
| St 44 | Plain | 37,000 | 21,400 | 102 |
| St 52 | Plain | 48,000 | 28,500 | 106 |
| KAM 40 | Deformed | 57,000 | 31,400 | 102 |
| KAM 60 | Deformed | 86,000 | 47,000 | 111 |
| KAM 90 [a] | Deformed | 130,000 | 70,000 [a] | — |
| HJS 70 | Plain | 100,000 | 50,000 | — |

[a] Experimental, not yet in production; made by cold-stretching KAM 60.

by high-strength reinforcement may vary widely between various types of structures. An extreme case considered by Granholm (*1*) involves a 65-ft girder of rectangular cross-section 5 ft deep. The cost of concrete and steel for the girder itself is reduced by 53 percent for KAM 60 reinforcement as compared to the mild steel St 37.

## STRUCTURAL DESIGN CONSIDERATIONS

The performance requirements of most reinforced concrete structures are covered by the following three general requirements (*2*):

1. Adequate safety against failure.
2. Limited formation of cracks in the concrete.
3. Adequate rigidity, or limited deflection.

The first requirement calls for calculations of strength in bending, compression, shear, bond, etc. The straightline theory of working-stress design contains numerous empirical modifications that are tied to conventional materials. The strength of structures reinforced with high-strength steels is, therefore, calculated most realistically by the inelastic theories referred to as ultimate strength design.

Calculations of crack formation should be made for the service load level. Extensive research has shown that in spite of high steel stresses the width of individual cracks can be held down to hairline size by several design means: (a) by using well-deformed bars; (b) by using relatively small bar diameters, which result in a relatively larger perimeter area available for bond; (c) by keeping the concrete area of the tension zone of girders as small as possible; and (d) by distributing the bars as uniformly as possible over the tension zone.

Deflection calculations should also be made for the service load level. Particularly when high-strength reinforcement is used, the concrete tension zone must be considered cracked, and effects of shrinkage and creep in the concrete compression zone must be accounted for. Bridge structures are built with suitable camber to cancel permanent deflection.

Structures reinforced with high-strength steel must be carefully designed. It is probable that a 60,000-psi yield-point steel can be used simply by cautious extrapolation of customary empirical design rules. However, such rules are often closely tied to experiences with materials of customary strength. Extrapolation of such rules to steels with yield points between 70,000 and 90,000 psi could therefore be hazardous, so that more realistic calculations are necessary.

## EXAMPLES OF COMPLETED EUROPEAN BRIDGES

International leadership in design and construction of concrete bridges reinforced with high-strength steel came about in Sweden in the 1950's as a result of close cooperation between the Royal Board of Roads and Waterways, the Swedish Cement and Concrete Research Institute, Chalmers University of Technology, the Swedish reinforcing steel industry, and several individuals. Extensive design study and experimental investigation were involved, and the use of high-strength steel in bridges was preceded by applications in buildings in the 1940's. The steel grade KAM 40 is widely used with a 30,000-psi allowable stress. Several types of bridges have been built with even higher reinforcement strengths.

Small bridges of the type shown in Figure 3 consist of T- or L-shaped girders that are factory mass-produced (*3*). The main reinforcement is HJS 70 with a 50,000-psi allowable stress. Lateral continuity is obtained by transverse rein-

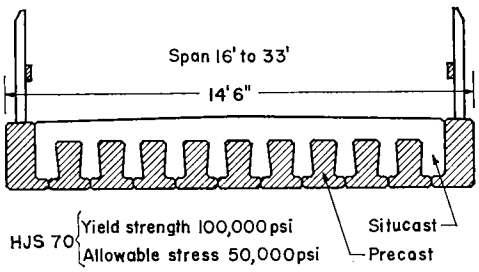


**Figure 3. Cross-section of precast CH-bridge.**

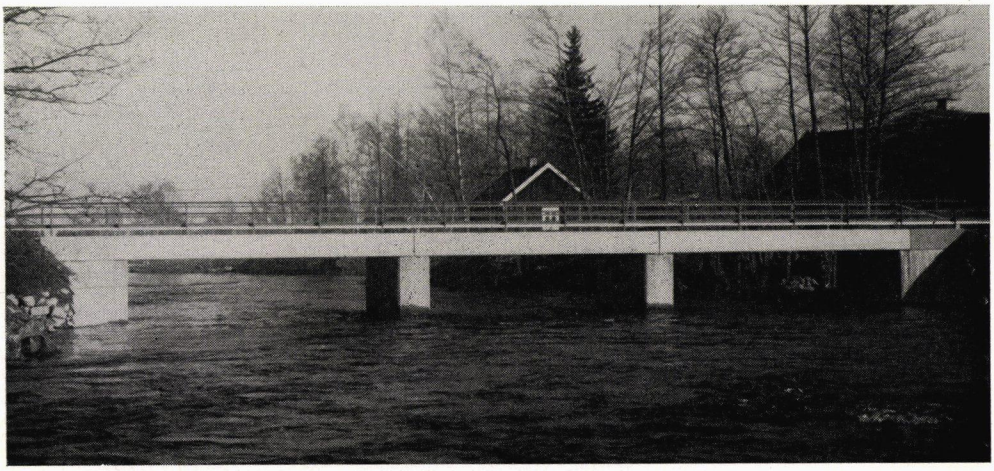

**Figure 4. Three-span CH-bridge.**

forcing bars passing through openings in the webs of the inverted T girders and embedded in the situ-cast deck topping. Both single- and multi-span bridges have been built. For the latter, live-load continuity is established at interior piers by longitudinal reinforcement placed in the situ-cast deck concrete. A completed bridge is shown in Figure 4. The abutments also consist of factory-produced units. The cylinder strength of precast and situ-cast concrete is 5,000 and 3,000 psi, respectively.

Figures 5 and 6 show a girder bridge across the Sagån river near Östanbro. The entire bridge was cast in place. The four girders are continuous over five spans, and the main reinforcement is HJS 70. Several continuous slab bridges have been built with KAM 60 as main reinforcement with an allowable stress of 43,000 psi.

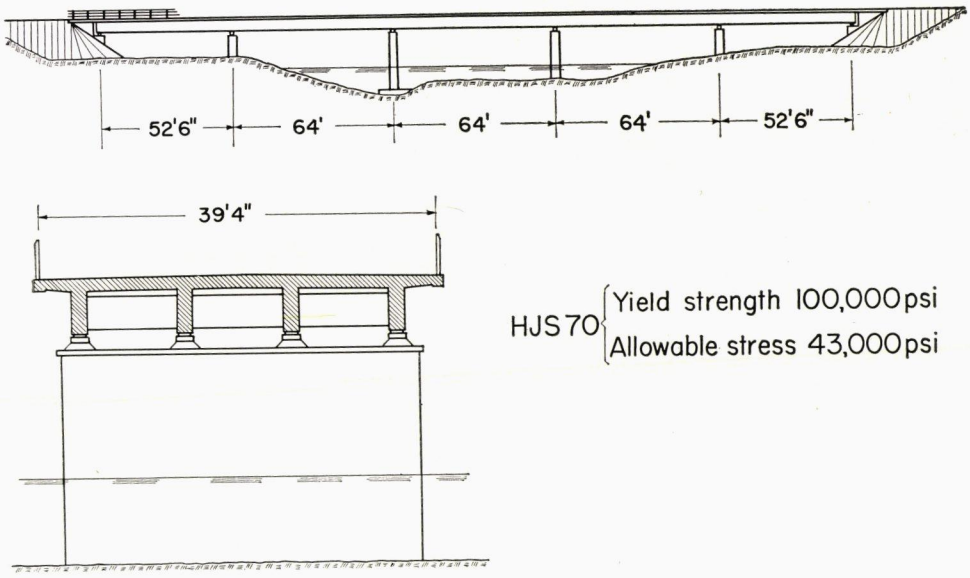


**Figure 5. Sagån River Bridge, Sweden.**

**Figure 6. Sagån River Bridge, Sweden.**

The 13-span girder bridge across the Svartån river (Fig. 7) is continuous. The end abutments, and the pairs of supporting columns connected by cross beams at each interior support, are cast in place. The girders of the main 131-ft span are cast in place and prestressed by post-tensioning. All girders in the 12 approach spans are factory-precast with deformed bars of KAM 60 quality as main reinforcement with an allowable stress of 43,000 psi. The entire bridge deck slab was situ-cast, and girder continuity from span to span was established by post-tensioning cables embedded in the deck slab. The construction view (Fig. 8) indicates the extent to which unusual slenderness was made possible by high-strength reinforcement.

The outstanding design of the Svartån

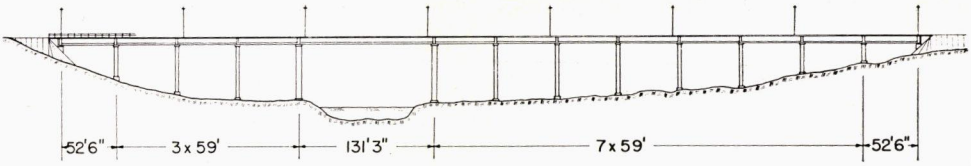


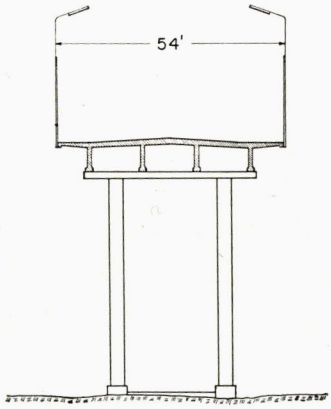


KAM60 { Yield point 86,000psi
Allowable stress 43,000psi

**Figure 7. Svartån River Bridge, Sweden.**

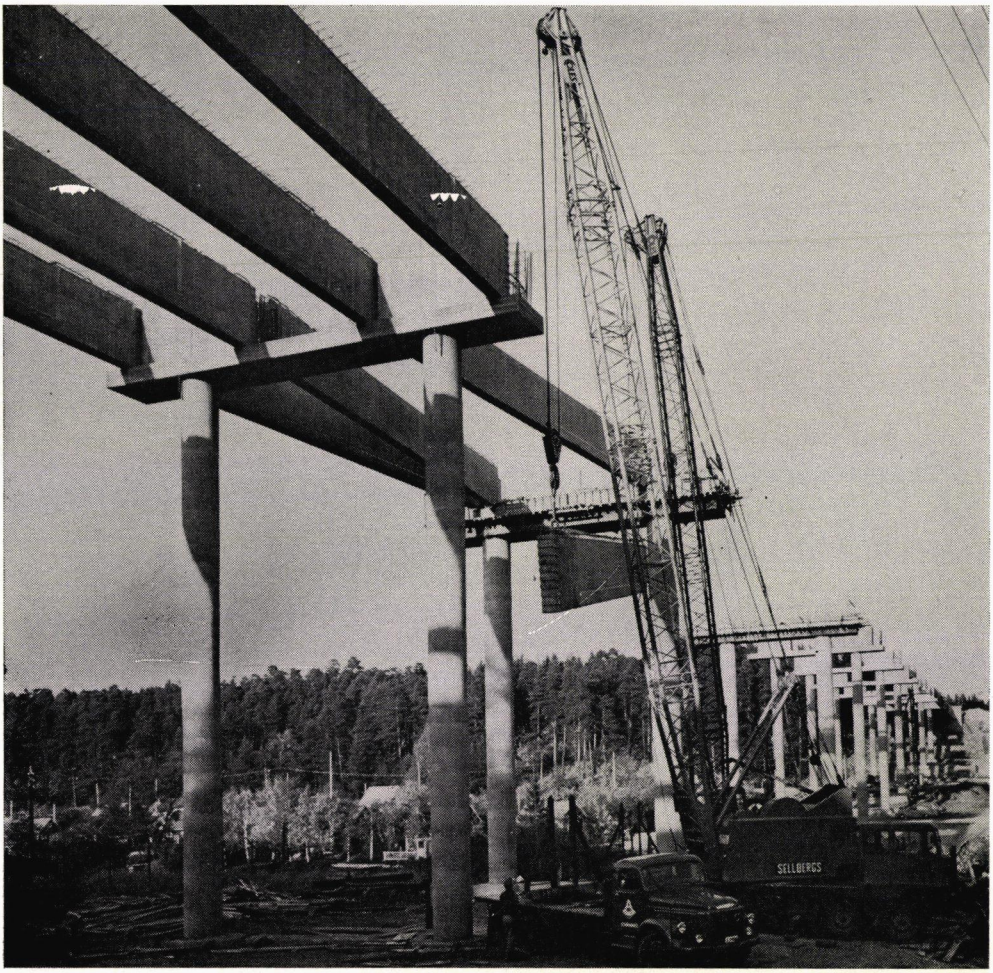


**Figure 8. Svartån River Bridge during construction.**

river bridge emphasizes that precast concrete, situ-cast concrete, prestressing, and conventional reinforcement should not be looked upon as competing materials. In many concrete bridge structures these four elements of design and construction complement each other and may well be used together, thus improving bridge performance and reducing costs.

The development of high-strength reinforcement in Central Europe has primarily been associated with cold-working in manufacture. The Drau bridge in Austria (Fig. 9) is an example selected from seven major bridges constructed in that country in recent years years using TOR 40 reinforcement with a yield strength of 57,000 psi and an allowable stress of 31,000 psi. The Drau bridge is a situ-cast, girder-slab structure continuous over three spans (150, 226, and 150 ft). The bridge was built in 1955–1957.

From the examples of European high-strength reinforcement usage in bridge constructions, it is clear that the development stage of tentative and experimental application has been completed.

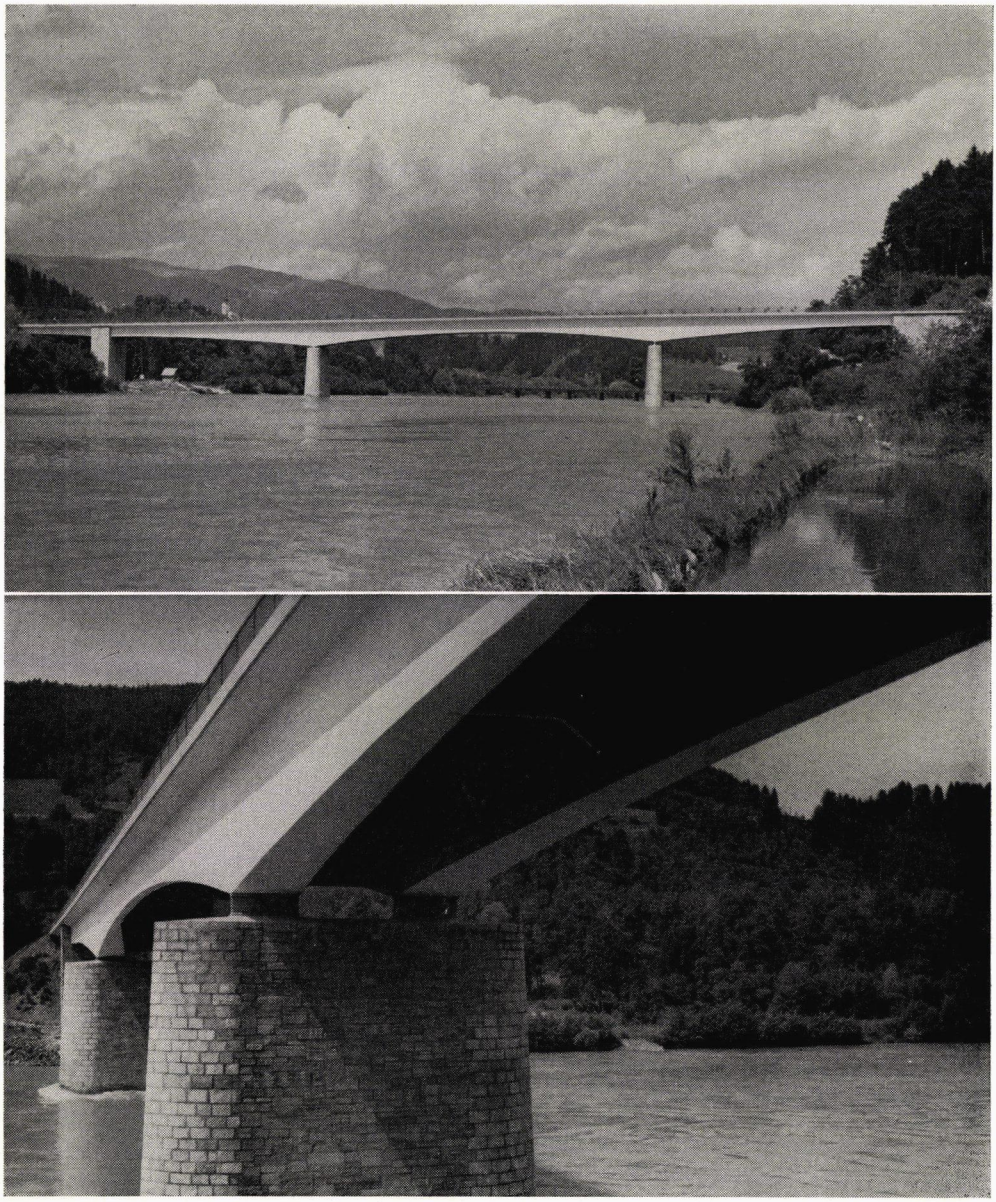

**Figure 9. The Drau bridge, Austria; TOR 40, with yield strength of 57,000 psi and allowable stress of 31,000 psi.**

## ASTM STANDARDS FOR HIGH-STRENGTH REINFORCEMENT

Development of high-strength reinforcement in the United States emerged from the laboratory stage only a few years ago. Two new building facilities at the Portland Cement Association laboratories were early applications of a 40,000-psi service load stress (*4*), and reinforcement with a 75,000-psi yield point has been used to some extent as column reinforcement. To the authors' knowledge, high-strength steel has not yet been used in American bridge construction.

To supply high-strength steel for

building construction, American reinforcing bar manufacturers have gathered production experience, and ASTM Standards for high-strength reinforcement have recently been issued (Table 2). Thus, American manufacture of high-strength bars has begun. If the European trend in reinforcement usage is repeated in the United States, the 60,000-psi yield-point bar may dominate American concrete bar reinforcement usage by the mid-1960's, and further developments toward extensive use of the 75,000-psi bar may well be in progress.

## RESEARCH AT CORNELL UNIVERSITY

It has been shown that high-strength reinforcing steels have been developed and widely used in practice in Europe. It might be asked, therefore, why additional investigations have been carried out in this country.

The chief reason is that, with the exception of Swedish practice, most of the European bars obtain their high strength by cold twisting and stretching of ordinary low-carbon reinforcing bars, and most of the available test data relate to these bars. Test data are needed regarding the performance of high-strength bars produced by the alloying of American steels and made in conformance with customary rolling procedures.

The strength characteristics and the shape of the stress-strain curve of these two types of high-strength reinforcing bars (Fig. 2) are similar in the initial regions, but the differences in the yield region are sufficient to warrant separate investigations. In addition, most of the European information refers to tests of rectangular simple beams and is concerned primarily with flexural strength.

TABLE 2

ASTM STANDARDS FOR HIGH-STRENGTH CONCRETE REINFORCEMENT

| ASTM Designation | Type of Steel | Minimum Yield point, psi | Minimum Ult. Strength, psi |
|---|---|---|---|
| A432-59T | Billet | 60,000 | 90,000 |
| A16-59T | Rail | 60,000 | 90,000 |
| A431-58T | Billet | 75,000 | 100,000 |

Most reinforced concrete beams are actually T-shaped and continuous, and in addition to their flexural strength, information on shear strength, crack formation, and magnitude of short- and long-time deflections was believed to be of equal importance.

To obtain information of this nature, a research program sponsored jointly by the U.S. Bureau of Public Roads and the Reinforced Concrete Research Council was instituted at Cornell University. Under this program 54 large T-beams were tested and analyzed in detail. Furthermore, in regard to studies of deflections, the results of numerous previous investigations at Cornell and at other institutions have been drawn upon.

The results and conclusions have been presented elsewhere (*5*, *6*). Therefore, the remainder of the present paper summarizes briefly the nature and the principal findings of these investigations.

## STEEL AND CONCRETE CHARACTERISTICS

Steel was furnished to a specification which called for a minimum yield point of 80,000 psi and adequate ductility. The low-alloy bars, received in two lots of somewhat different chemistry, showed the following ranges of strength properties: yield strength—83,200 to 103,100 psi; tensile strength—137,300 to 149,700 psi; and elongation—9.0 to 19.6 percent. There was no correlation between these various properties; that is, large elongations (high ductility) as well as small elongations (lower ductility) were found among both the higher and the lower strength bars.

Typical stress-strain curves of these American low-alloy bars are shown in Figure 10. For comparison stress-strain curves of a conventional intermediate grade low-carbon steel and of an American cold-twisted low-carbon steel also are shown. The alloy steel has either a small—or no—yield plateau, if compared to ordinary intermediate grade steel. It does have a definite break in the curve before it enters strain hardening almost immediately upon yielding, in contrast to the gradual curving of the cold-worked

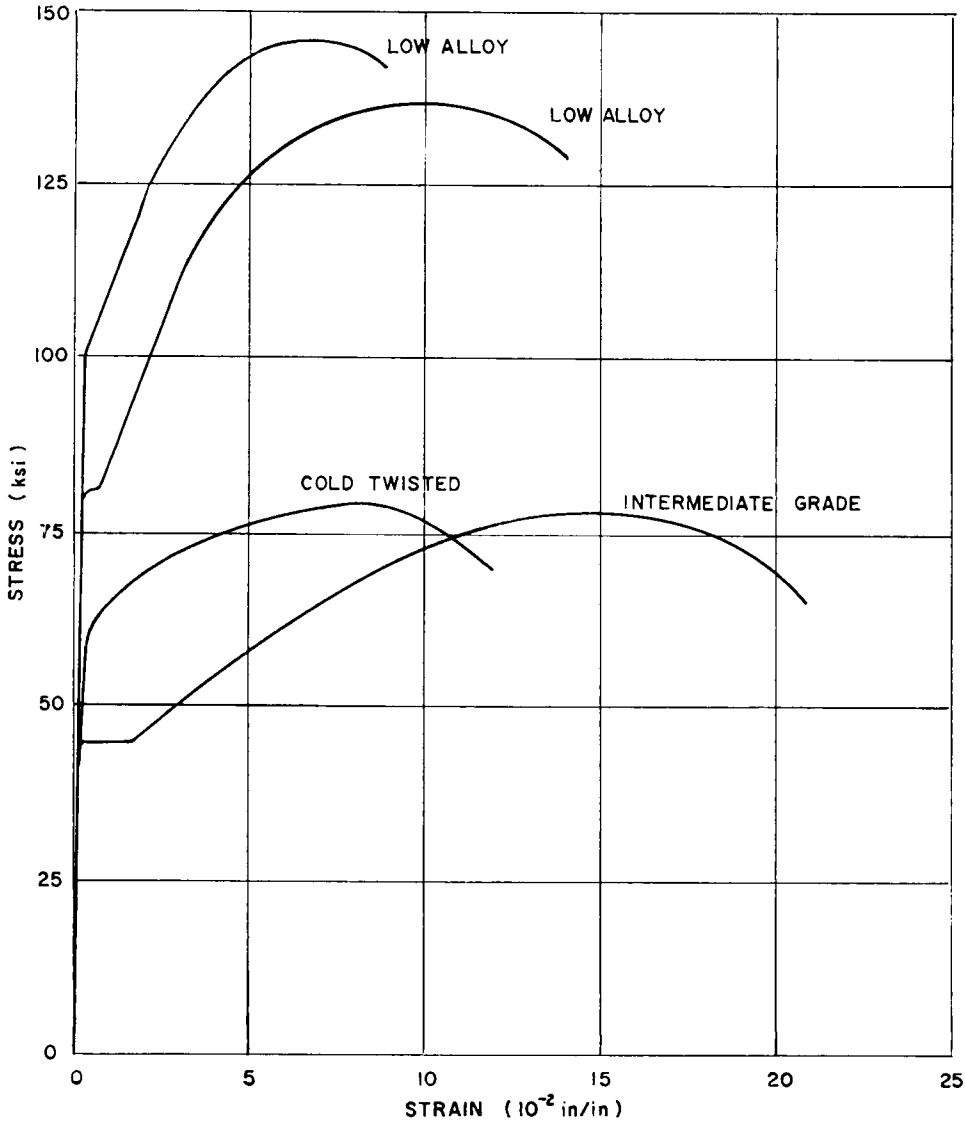


**Figure 10. Stress-strain diagrams of reinforcing steels.**

steel. Also, the latter shows a considerably smaller spread between tensile strength and yield strength.

Of the 42 beams which were tested chiefly for flexural and shear strength, crack formation, etc., one-half had been designed for a cylinder strength of 3,000 psi and the other half for 5,000 psi. Measured cylinder strengths were satisfactorily close to these values. In a supplementary series of 12 beams investigated primarily for short-time and creep deflections, cylinder strengths ranged from 3,500 to 4,200 psi.

## SPECIMENS AND LOAD ARRANGEMENTS

The concrete dimensions of the cross-sections of all 42 beams of the main series were the same (Fig. 11). The cross-

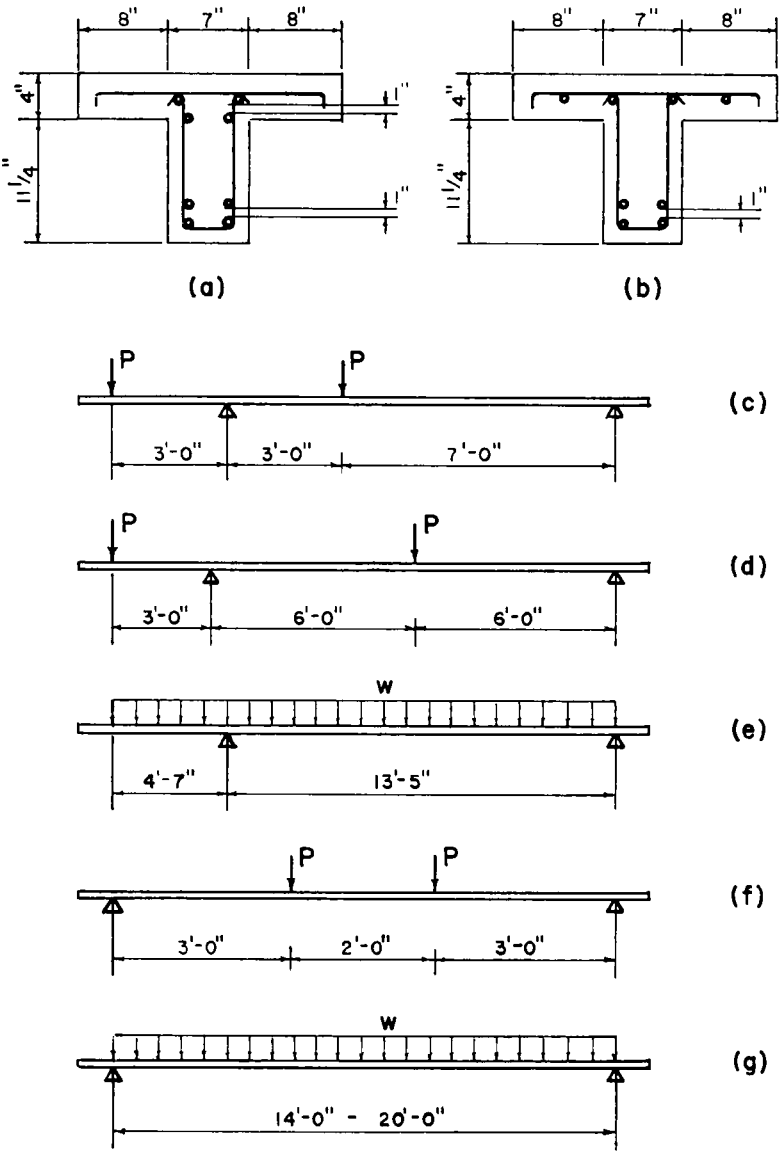


**Figure 11. Beam specimens of Cornell University tests on high-strength reinforcement.**

sections of the 12 beams of the supplementary series were of similar over-all dimensions, except that suitable variations of flange-to-stem width and flange-to-stem depth were introduced to ascertain the influence of these variables on magnitude of deflections.

The beams of the main series were provided with high-strength longitudinal reinforcement over the entire length at the bottom and, where needed, for negative moment at the top. Beams without and with web reinforcement were tested, the web steel consisting of either No. 2 cold-drawn wire or No. 4 intermediate grade deformed bars. Some beams of the supplementary series were high-strength reinforced in tension only, some had compression reinforcement equal to one-half of the tension reinforcement, and the

rest had tension and compression reinforcement of equal amounts. This variation was introduced to study the influence of amount of compression reinforcement on deflection.

The various arrangements of loads and reactions of the 42 main beams are shown in Figures 11c to 11f. The overhang for the first three of these loadings was provided to simulate performance over a continuous support. The uniformly distributed load of Figure 11e was supplied in a test frame by hydraulic jacks spaced at 1-ft intervals and connected in parallel.

The uniform load of six of the twelve supplementary beams (Fig. 11g) was applied in the same manner. The remaining six beams, which were identical companion specimens to the corresponding first beams, were tested for creep deflections by applying long-time uniform load by means of individually weighed lead pigs. These were left in place for nine months, during which time periodic deflection measurements were made.

*Flexural Strength*

Of the 42 beams of the main series, 16 failed in bending or a combination of bending and shear. The ultimate test loads were compared with those computed from ultimate strength theory of reinforced concrete. For improved rigor, the equations given by Hognestad, Hanson and McHenry (7) were used instead of the simplified, approximate formula given in the Appendix to the 1956 ACI Building Code (ACI 318–56). In these equations, the yield strength as determined by the 0.2 percent offset method was taken for the yield point, $f_y$. It was found that the actual flexural strength exceeded the calculated values by 4 to 45 percent. This agrees with European observations. The discrepancy, on the conservative side, is due to the fact that these steels possess practically no yield plateau. They enter the strain hardening range almost immediately upon reaching their proportional limits, and reach larger strains only under increased stress, in contrast to ordinary mild carbon steels which, at yielding, undergo large strains at constant stress. None of the bars broke, in spite of the relatively small tension test elongation of some, as previously noted. This indicates that ductility was sufficient to insure full flexural strength.

It is natural that ultimate strength theory should underestimate the capacity of such members, while predicting very accurately the strength of beams reinforced with mild steel. The theory, in its simple form, assumes a yield plateau of indefinite length, thus neglecting strain hardening. Because only a slight yield plateau was present in the steels of these tests, strain hardening did take place; an accurate strength calculation would have to be based on strain relationships, a feature which is well understood but not included in customary ultimate strength theory.

Even so, this theory, although it predicts the strength on the conservative side, is much more suitable for the design of beams with high-strength reinforcement than is the conventional straightline theory. The latter, for high-strength steels, set erroneously low values for the "balanced reinforcement ratio." In this manner, the straightline theory unjustifiably calls for uneconomical compression reinforcement even for quite small tension steel ratios. Ultimate strength theory correctly predicts that no such compression steel is needed except for unusually high tension steel percentages. In this manner, ultimate strength theory makes possible the economical utilization of high-strength steels.

The present limitation of the yield point (in the Appendix to the 1956 ACI Building Code) to values not exceeding 60,000 psi was found to be an unnecessary restriction as far as determination of flexural strength of these test members is concerned. The strength of beams with steel of yield point as high as 103,000 psi was just as conservatively predicted by the ultimate strength theory as for steels of lower strength.

*Shear Strength*

In contrast to bending strength, which can be computed quite accurately by ultimate strength theory, no reliable

method is yet available for prediction of shear strength of reinforced concrete beams. Pending the development of such methods from the results of the extensive investigations carried out in recent years, the suitability of high-strength steel in regard to shear strength can perhaps best be illustrated in a somewhat indirect fashion. This consists of comparing the ultimate loads of those beams which failed in shear with the allowable values of the shear force as computed by the 1956 ACI Building Code. For beams with ordinary reinforcement the 1956 Code methods are known to give adequate safety factors, even though these factors scatter over a wide range and the factors for "long" beams without web reinforcement may in extreme cases be somewhat low.

Such a comparison was made for those 30 beams of the main series which failed in shear or a combination of shear and flexure. If $V_u$ is the ultimate strength in shear by test, and $V_{al}$ the allowable shear force for the same beam computed by the 1956 ACI Building Code, the safety factors $V_u/V_{al}$ ranged from 2.76 to 7.81. This amount of scattering is about the same as obtained by comparing code values with experimental results from ordinary reinforcement. This indicates that the safety in shear of these high-strength reinforced beams was on a par with that of beams with ordinary reinforcement. Also, even the lowest safety factor obtained in these tests, 2.76, is adequate to insure safety against shear failure.

### *Cracks at Service Loads*

Because the tensile strength of concrete is small, all normally designed beams, girders, and similar members show varying amounts of small hairline cracks in the tension zone at ordinary design loads. These are not detrimental unless their width is so large as to become objectionable in regard to appearance, or to result in inadequate corrosion protection of the reinforcement.

The European Concrete Committee has recently completed extensive studies of the maximum crack width which may be regarded as permissible in regard to these two features, appearance and corrosion protection. A maximum crack width of about 0.01 in. is often satisfactory in both respects although structures in highly corrosive surroundings call for a maximum width of 0.004 to 0.008 in., whereas up to 0.012-in. cracks can be permitted for members in dry climates and members protected in the interior of buildings.

It has been conjectured that crack width increases directly with steel strain and, therefore, with steel stress. This would tend to indicate that the use of high-strength reinforcement may be accompanied by cracks sufficiently large to be objectionable. This view has much in its favor when applied to plain smooth bars which tend to result in a few widely spaced cracks of considerable width. For bars deformed to ASTM A305, however, it has been found that the interlocking of the large deformations with the surrounding concrete tends to distribute cracks quite evenly. With proper attention to design details, higher steel stresses and strains may then result chiefly in a larger number of more closely spaced narrow hairline cracks, without significantly increasing the width of the individual cracks.

To obtain reliable data, crack formation was carefully observed and recorded on the 42 beams of the main series. Crack widths at successive load increments were determined by means of a 50-power measuring hand microscope. It is appropriate to distinguish between flexural cracks and diagonal tension cracks.

*Flexural Cracks.* It is known that the better the bond performance of the reinforcement the narrower are the flexural cracks. This means that deformed bars produce smaller cracks than plain bars, and that among deformed bars those of small diameter (large perimeter/area ratio) again produce smaller cracks. It is also known that the smaller the ratio of the concrete area in tension surrounding a bar to the area of that bar, the less the crack width. This indicates that crack width can be significantly influenced by appropriate detailing.

In the region of positive moments the

following was found: At loads which correspond to steel stresses of about 30,000 psi, the maximum measured crack widths ranged from 0.005 to 0.01 in. for the beams which failed in flexure. At one-half the computed ultimate load (that is, at steel stresses of 45,000 to 50,000 psi) the maximum measured crack widths had reached 0.007 to 0.015 in. One beam showed about 50 percent larger crack widths than any of the others. This beam was designed to fail in shear, and actually failed in a combination of shear and flexure. This points out another prerequisite for good crack control, confirmed by other observations noted hereafter. This is the fact that maintaining a larger safety factor against shear failure than against flexural failure reduces the width of cracks at design (service) loads.

Crack widths in the region of negative moments over the interior supports of the beams of Figures 11c, 11d and 11e were quite different, depending on whether the negative reinforcement was bunched within the stem width (Fig. 11a) or distributed over the entire width of the flange (Fig. 11b). For bunched reinforcement, these cracks reached maximum widths of more than twice those in the positive moment region, while for distributed reinforcement cracks in both regions were of about equal width. This indicates, again, the importance of detailing for improved crack control, in particular of uniformly distributing the reinforcement over the width of the tensile zone (*2*).

*Diagonal Tension Cracks of Web-Reinforced Beams.* For those beams which failed in flexure, the width of diagonal cracks at tensile steel stresses of 30,000 psi and at one-half the computed ultimate load (at tensile steel stresses of 45,000 to 50,000 psi) was similar to that of the flexural cracks at the same loads. That is, the width of the largest diagonal cracks did not exceed 0.01 in. and 0.015 in., respectively. The exceptions were, again, those beams which failed in a combination of shear and flexure. In these, crack widths at the foregoing steel stresses were more than 50 percent greater. This re-emphasizes the desirability of having a larger reserve against shear failure than against tension failure. For one of the beams reinforced with bunched negative steel (Fig. 11a) and which failed in the combined shear-flexure mode preceded by large diagonal cracks, a companion specimen was tested with reinforcement distributed over the flange width (Fig. 11b). For this beam, at the foregoing steel stresses, the width of diagonal cracks was only one-sixth of that of the companion beam with bunched reinforcement. This indicates, again, the importance of judicious detailing to improve crack control.

*Summary.* There is no doubt that crack width does increase with increasing steel stress so that the full utilization of high-strength steel in otherwise identical beams will result in wider cracks. However, crack width can be decisively controlled by design and detailing; that is, by keeping the shear strength of the member well above its flexural strength, by using relatively small bars (large perimeter/area ratios) which is especially appropriate to high-strength steels, and by distributing the steel uniformly over the width of the tensile zone. With such measures it is quite easy to keep crack widths below 0.01 to 0.015 in. at service loads, even for steels with yield strengths as high as 100,000 psi and service load stresses of 50,000 psi.

### *Deflections*

Even for customary strength materials, there has been no general agreement whether instantaneous deflections of reinforced concrete structures should be calculated on the basis of the moment of inertia of the gross concrete section or some other value. Furthermore, there has been very little information available on long-time deflections caused by creep and shrinkage. Particularly in connection with high-strength steels, therefore, it is desirable to develop improved procedures for calculating the magnitude of deflections which occur instantaneously upon application of load, as well as long-time deflections caused by creep and shrinkage.

To develop such information for

instantaneous deflections, a total of 90 test results have been evaluated from six different investigations, about half of which were obtained at institutions other than Cornell University. For long-time creep deflections, 85 test results were evaluated from 5 different investigations; only 12 of these results were obtained at Cornell University. Both types of deflections the test results considered include beams with ordinary as well as with high-strength reinforcement.

*Instantaneous Deflections.* It was found that instantaneous deflections at service (design) loads can be predicted very satisfactorily by the customary formulas for calculating elastic deflections, provided that a suitable rigidity $EI$ is used. For this purpose, it is necessary to use for $I$ the moment of inertia of the conventional cracked, transformed section. For the modulus of elasticity, Guralnick in his earlier investigation proposed that the modulus for concrete, $E_c = 1{,}800{,}00 + 460f_c'$ (units in psi), be used. However, it is found that the value of the deflection is quite insensitive to limited changes in the concrete modulus, and the evaluation of the quoted 90 tests showed that the simpler ACI code value, $E_c = 1{,}000f_c'$ is just as satisfactory for deflection calculation, even though the first of the two expressions is known to be a better approximation to the true modulus.

The method can be slightly improved by simply accounting for the fact that part of the concrete in the tension zone does contribute to the flexural rigidity. However, even without this correction the accuracy of this method is entirely satisfactory for design purposes, the mean ratio of calculated to measured deflection is 1.05, with a standard deviation 0.15.

*Long-Time Deflections.* In reinforced concrete, long-time deflections under sustained loads exceed the instantaneous values due to the complex effects of creep and shrinkage. It is also known that the ratio of compression reinforcement, $A_s'$, to tension reinforcement, $A_s$, is of importance, inasmuch as compression reinforcement definitely reduces long-time deflections. Furthermore, long-time deflections are influenced by the concrete age at the time of loading and by atmospheric conditions.

One method of predicting long-time deflections is to use a reduced long-time modulus of elasticity for concrete in computing such deflections. It has been found, however, that an even simpler method leads to somewhat better agreement with the test results considered. This consists of the following: To compute the total long-time deflection, the calculated instantaneous deflection is multiplied by a factor $F$ which depends on duration of sustained loading and on the amount of compression reinforcement present. The factor is obtained from Table 3.

For the 85 long-time deflection measurements which have been evaluated, the average ratio of deflection so calculated to measured values was 1.027, with a standard deviation of 0.11.

## CONCLUSIONS

1. The flexural strength of beams with high-strength reinforcement is reliably and conservatively predicted by the ultimate strength theory.
2. There is no indication that increased longitudinal strain associated with the use of such steels causes any significant reduction in shear strength.
3. For identical test specimens, flexural and diagonal hairline cracks at service loads are somewhat wider in beams with high-strength reinforcement than with ordinary reinforcement. However, by attention to design detailing, such crack widths can easily be kept below objectionable values.
4. Methods of computing instantaneous and long-time deflections, applicable to both conventional and high-strength reinforcement, have been

TABLE 3

$F$ FACTORS FOR LONG-TIME DEFLECTIONS

| Duration of Loading | Value of $F$ | | |
|---|---|---|---|
| | $A_s'=0$ | $A_s'=A_s/2$ | $A_s'=A_s$ |
| 1 month | 1.6 | 1.4 | 1.3 |
| 3 months | 2.0 | 1.8 | 1.6 |
| 1 year | 2.4 | 2.0 | 1.8 |
| 5 years | 3.0 | 2.2 | 1.8 |

studied. Results indicate that deflections can be predicted with satisfactory accuracy for design purposes by using the transformed area of the cracked section, combined with factors which take account of duration of sustained loading and the ratio of compression steel to tension steel.

REFERENCES

1. GRANHOLM, H., "KAM 40, KAM 60 och KAM 90." Trans. of Chalmers Univ. of Technology, No. 213, Gothenburg, Sweden, 40 pp. (1959).
2. WÄSTLUND, G., "Use of High-Strength Steel in Reinforced Concrete." *Jour. ACI*, 55:1237–1250 (June 1959).
3. HOLMBERG, A., "Monteringsbara betongbroar av CH-element," (Precast Concrete Bridges of CH-Elements). *Cement och Betong*, 31:3, 112–119, Malmö (Oct. 1956).
4. GASTON, J. R., AND HOGNESTAD, E., "Precast Concrete Girders Reinforced with High-Strength Deformed Bars." Portland Cement Assn., Development Dept. Bull. D24. Reprinted from *Jour. ACI*, 55:469–484 (Oct. 1958).
5. GURALNICK, S. A., "An Investigation of High-Strength Deformed Steel Bars for Concrete Reinforcement." To be published.
6. YU, W. W., AND WINTER, G., "Instantaneous and Long-Time Deflections of Reinforced Concrete Beams under Working Loads." To be published.
7. HOGNESTAD, E., HANSON, N. W., AND MCHENRY, D., "Concrete Stress Distribution in Ultimate Strength Design." Portland Cement Assn., Development Dept. Bull. D6 (Reprinted from *Jour. ACI*, 52:455–479 (Dec. 1955).

# DISCUSSION

F. T. MAVIS, *Dean, College of Engineering, University of Maryland, and* MELVIN J. GREAVES, *Chief Engineer, Metals Division, Arthur G. McKee and Co., Cleveland, Ohio*—The authors are tightening further the net of evidence that high-strength reinforcing steel—or call it hard-grade steel— has advantages in reinforced concrete construction if it is used with competence. The authors consider only beams subjected to static loads; but their conclusions will hold few surprises for engineers who are aware of the dynamic tests reported by Mavis, Richards, Greaves, and Stewart (*8–12*), Carlson and Murtha (*13*), and Allgood and Shaw (*14*).

If steel and concrete in a beam behave like steel and concrete in test coupons and test cylinders, and if steel and concrete stick together in the composite which is a reinforced concrete beam, then the behavior of the composite beam under load must follow rationally. Otherwise the laws of statics and of geometry would be invalid. For a beam as a whole—and for any section of that beam—the impulsive imbalance between loads and reactions must be offset by momentum changes of heavy matter; and relative to a given point, line, and plane, the displacement of any other point—or other small line or plane—must be uniquely related to the distortions which coexist with loads and reactions during an appropriate interval of time (*15*). Accordingly, it can be generalized that the flexural strength of a reinforced concrete beam and its continuous curvature can be predicted adequately (a) if enough is known about loads, reactions, materials, and how they behave, and (b) if the predictor is skilled enough and patient enough to work through the geometry and mechanics which applies (*16*). (He can even toss in a few slope-discontinuities, if he chooses, and external displacement and internal distortion will not part company as long as steel and concrete stick together in all parts of the composite whole.)

The authors' conclusions are particu-

larized statements of the foregoing generalization—the ultimate strength theory being but one of many possible and usually acceptable simplifications.

The authors also conclude that "there is no indication that increased longitudinal strain associated with the use of such steels causes any significant reduction in shear strength." If every essential precaution is taken to assure that steel and concrete stick together (as by using suitably deformed bars of appropriate size, properly placed) the concrete would be oblivious to the ancestry of the steel reinforcement as long as its strain in service remained with the 2 percent value (mentioned elsewhere by the authors for their static tests) or within the 3 percent value mentioned earlier by the discussers for dynamic loads (*9*, p. 246). However, the prudent engineer will decide what precautions he will take to assure adequacy of shear reinforcement in concrete beams both (a) where shear stresses may be high, and (b) where there may be rapid changes (or reversals) of shear stresses accompanying dynamic loadings.

REFERENCES

8. MAVIS, F. T., AND RICHARDS, F. A., "Impulse Testing of Concrete Beams." *Jour. Amer. Conc. Inst.*, pp. 93–102 (Sept. 1955).
9. MAVIS, F. T., AND GREAVES, M. J., "Destructive Impulse Loading of Reinforced Concrete Beams." (including bibliog.) *Jour. Amer. Conc. Inst.*, pp. 233–252 (Sept. 1957); Disc., pp. 811, 823 (Mar. 1958).
10. MAVIS, F. T., AND GREAVES, M. J., "Instrumentation and Method for Impulse Testing of Reinforced-Concrete Beams." *ASTM Bull.*, pp. 43–47 (Dec. 1957).
11. GREAVES, M. J., AND MAVIS, F. T., "Inelastic Behavior of Impulsively Loaded Beams." *Trans. Amer. Soc. Civil Eng.*, 124:395–408 (1959).
12. MAVIS, F. T., AND STEWART, J. J., "Further Tests of Dynamically Loaded Beams." *Jour. Amer. Conc. Inst.*, pp. 1215–1223 (May 1959).
13. CARLSON, R. H., AND MURTHA, J. P. (Unpubl. report).
14. ALLGOOD, J. R., AND SHAW, W. A., "Elasto-Plastic Response of Beams to Dynamic Loads." NCEL Tech. Memo. M-130 (Mar. 1958).
15. CROSS, H., "Virtual Work—A Restatement." *Trans. Amer. Soc. Civil Eng.*, 90:610–626 (1927).
16. MAVIS, F. T., (Disc. of Paper No. 1910) "Elastic Resistance of Reinforced Concrete Beams." *Jour. Struc. Div., Proc. ASCE*, pp. 53–54 (Sept. 1959).