# MATHEMATICAL MODEL FOR IMPACT TESTS ON CRASH BARRIERS

V. Giavotto, Technological University, Milan, Italy

A computer program has been developed that simulates impacts of various vehicles with guardrail barriers. This program is a digital simulation system, making use of several mathematical models. The vehicle simulation is composed of 3 major segments: the vehicle as a rigid body, the steering gear, and the deformation of the body due to the impact. The barrier is essentially a structured beam on many flexible supports; the beam is divided into a certain number of elements connected to each other at the nodes. The vehicle and the barrier work in the following combinations: dynamics of the vehicle alone before impact when the barrier is motionless and undeformed; dynamics of the vehicle and the barrier exerting forces on each other after impact; dynamics of the vehicle and the barrier not exerting forces on each other when they have no contact and the barrier oscillates because of inertia; and dynamics of the vehicle alone when there is no contact with the barrier, which is motionless and deformed. A certain number of full-scale tests have been computed, and a fair agreement with experimental results has been obtained. The use of such a program will substantially reduce the number of full-scale tests.

•AT THE END of 1968 the Institute for Road Safety Research in the Netherlands realized the importance of having a mathematical model to simulate the impact of a vehicle against a guardrail barrier. Such a mathematical model was mainly intended to correlate results of simulations and full-scale tests and then to predict results so that the number of actual tests needed to evaluate the behavior of the barrier could be reduced. The advantages of such a mathematical device are quite obvious; the cost of a computation, though not negligible, is always considerably lower than the cost of a full-scale test. We expected that the model could reduce the total cost of the work of developing and evaluating the barriers mentioned or enable more extensive work to be done at the same price.

The work started with the development of a relatively simple model in which the barrier was considered as a continuous beam supported by posts. For the reaction of the posts, the model used experimental data, in terms of force versus displacement and rate displacement, obtained by means of dynamic tests. The vehicle model was already pretty well defined, including complete dynamics and the body deformation due to the impact.

A far more complicated model was then desired that would take into account the stiffening of the beam brought about by diagonal bars between the rails, the effect of large deflections, the second-stage effect (i.e., the increase in stiffness occurring when one rail hits the ground), and other aspects not included in the first model.

That new model required a much larger memory space and computing time and hence a greater computer cost. But at that time it was possible to limit the cost to about that of the former model by using improved programming techniques that were developed at the Aerospace Department of Politecnico of Milan for structural analysis. Without those new techniques, total computing time would have been more than 20 times greater.

At present the mathematical model has reached a rather high level of development and has been tested with the experimental results of full-scale tests conducted by the

Institute for Road Safety Research. It is really more than a mathematical model; it is a digital simulation system, which in part makes use of several mathematical models.

## DIGITAL SIMULATION SYSTEM

The simulation system is essentially a program consisting of different parts or segments. The program itself chooses which part it has to use and how it has to combine the various segments during the simulation. For example, the main parts, the vehicle and the barrier, can work in the following combinations:

1. Dynamics of the vehicle alone before impact when the barrier is motionless and undeformed;
2. Dynamics of the vehicle and the barrier exerting forces on each other after the impact;
3. Dynamics of the vehicle and the barrier not exerting forces on each other when they have no contact and the barrier oscillates because of its inertia; and
4. Dynamics of the vehicle alone when there is no contact with the barrier, which is no longer oscillating.

In configurations 1 and 4 the positions of the vehicle and the barrier are compared; and when an interference occurs between the side of the vehicle and the barrier (vehicle and barrier undeformed in configuration 1, deformed in configuration 4), the computation is turned into configuration 2. In configuration 2 the vehicle and the barrier are considered connected at a certain number of points at which a certain number of mutual forces are exerted. Each mutual force cannot be a pull, and when one force begins to be a pull the corresponding point is no longer a point of contact. When there is no longer a point of contact, the computation is turned into configuration 3.

Figure 1 shows a general flow chart of the simulation system. In configuration 1, phase 2 is bypassed by test 3. In configuration 2, phase 2 is executed. In configuration 3, phase 2 is still executed, but there is no connection (and force) between the vehicle and the barrier. In configuration 4, phase 2 is again bypassed by test 3, which, obviously, is a rather complex test. Test 4 decides when the computation has to be terminated: That may happen when the computation has actually reached the end point, which has to be specified among input data, or when the roll angle of the vehicle becomes greater than 1 radian. At that point the vehicle will certainly overturn, but the program cannot simulate the subsequent motion.

## VEHICLE

The vehicle simulation is composed of 3 major segments:

1. The vehicle as a rigid body,
2. The steering gear, and
3. The deformation of the body due to the impact.

Segment 1 computes the motion of the vehicle considered as a rigid body with 6 degrees of freedom (Fig. 2). The forces acting are only forces of gravitation and ground reactions (one for each wheel). No consideration is given to aerodynamic forces. The vertical component of each ground reaction is computed as a function of the corresponding vertical deflection of the suspension and tire; the horizontal component, or cornering force (Fig. 3), equals the vertical component multiplied by a cornering force coefficient, which is a function of the angle of sideslip (Fig. 4). The maximum value, DFCM, of that coefficient may have different values, depending on the nature and the condition of the road surface.

The movement of the steering gear may be a priori known as input data, when someone is operating the steering wheel, or during the specified time intervals may be computed from the dynamics of the steering mechanism. That is done in a rather complete scheme that considers also gyroscopic couples on the wheels, the effect of caster, inclination, and pneumatic trail (Fig. 3). (Pneumatic trail is the backward displacement of the centroid of the contact area between the tire and the road surface. It increases with the vertical reaction and with the angle of sideslip and produces a torque that tends

**Figure 1.**

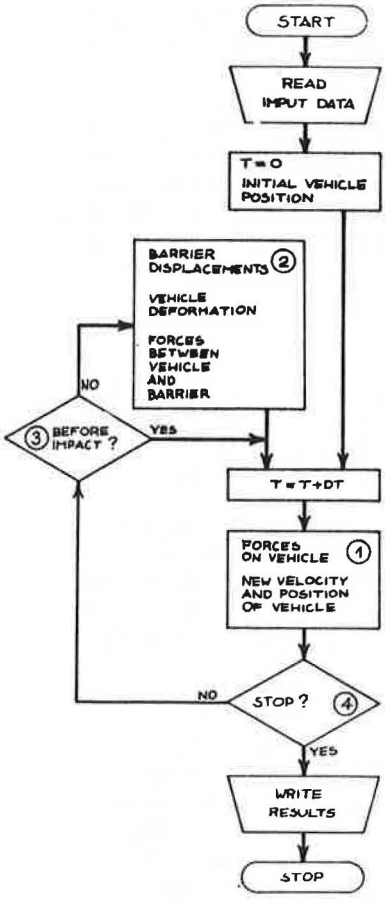


**Figure 2.**

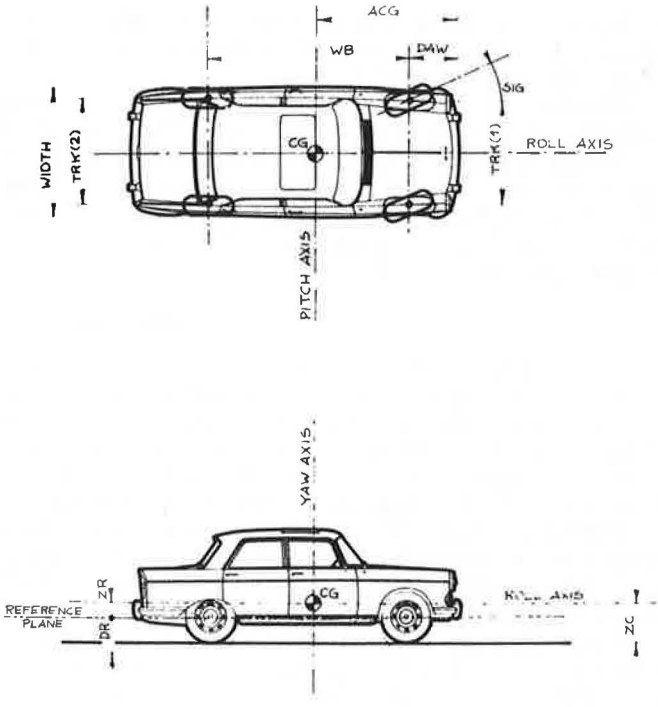


**Figure 3.**

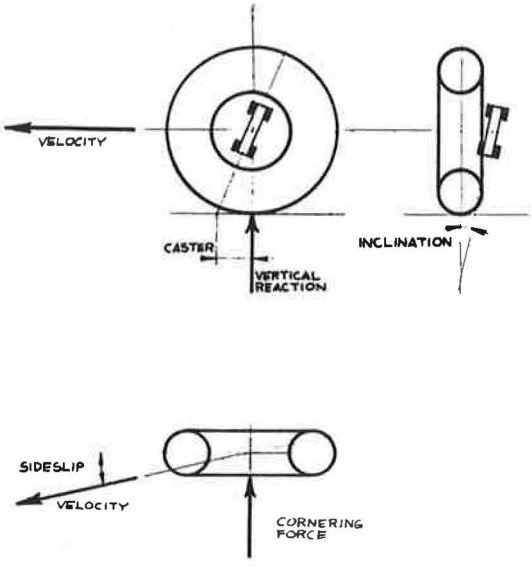


**Figure 4.**

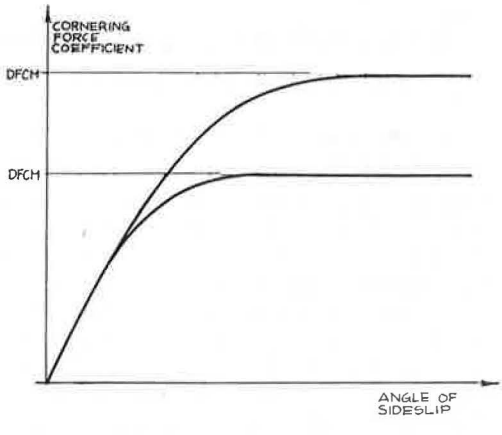

to move the steering gear in the sense of reducing the sideslip.) In this way the simulation will cover any movement of the vehicle that can be obtained by operating or abandoning the steering wheel.

The third segment, which works when the vehicle is in contact with the barrier, simulates the deformation of the body. The contact may take place at a certain number of points, to be assigned, up to a maximum of eight (Fig. 5). The force-deflection diagram at each point consists of a softer part, followed, after deflection reaches the value SBER(I), by a stiffer part. For decreasing deflection, the force decreases even more steeply, and after the force has reached zero a certain amount of plastic deformation remains present.

## BARRIER

The barrier is essentially a continuous beam on flexible supports. The beam is divided into a certain number of elements connected with each other at the nodes (Fig. 6). An element is that part of the beam between 2 spacers and may have a diagonal bar (Fig. 7). Some of the nodes are connected to the flexible supports. If no external force acts on an element between the nodes, the element deformation is completely represented by the superimposition of the 6 modes shown in Figure 8.

The diagonal bar, if present, exerts a force T depending on the relative displacement $\delta$ of its terminal points. The model for the force T is shown in Figure 9. To increase $\delta$, beginning from $\delta = 0$, T increases elastically up to the value TA of the friction force; then T = TA. T in turn increases elastically after $\delta$ has reached the value allowed by the play, GPOS, between the bolts and the holes to the value TS of the limit bearing force. After that point, the bolt starts bearing the sheet of the rail, increasing the actual play. To decrease $\delta$, T decreases elastically. For negative values of T the model is the same, but a different value, GNEG, of the play may be specified.

The model for the motion of the sections of the beam is shown in Figure 10. It is a rigid rotation around point 0, mainly due to constraints of the posts, followed by a rigid rotation around point $0_1$, when the rear rail collides with the ground. When the values of CRO, CRV, and CRC are properly chosen, that model will represent a good approximation of the motion observed in full-scale tests. For the reactions of the posts, experimental values are used, which were recorded in dynamic tests (1), and plotted versus displacements (Fig. 11). Displacement is decreased by the assumption that the force linearly decreases; the slope starts down beyond point A, where the reaction reaches its maximum value. As long as the rear rail is in contact with the ground, contact reactions are also present and are assumed to be perfectly elastoplastic (Fig. 12).

The main effects of large displacements are as follows:

1. A certain amount of tension builds up in the beam and produces a stiffening effect; and
2. Because of the constraint of the posts (Fig. 13), a certain amount of secondary bending takes place and causes the deflection.

That bending, although not very great, may have a rather strong stiffening effect because it takes place around the axis of maximum bending stiffness of the rail (axis bb, Fig. 7). The tension on the beam depends on the elongation as shown in Figure 14. Varying the values of the limit friction force, ENNA, and the play makes it possible to simulate different expansion joints. In the bending of the beam, some plastic deformations are also possible; this occurs when the yield stresses are exceeded.

After the vehicle has moved into its new position, a new equilibrium configuration is found that corresponds to a small time increment dt (Fig. 15). Typical figures for that time increment, which have been extensively used in computations with practically the same results, are 5 and 2.5 ms.

At every step all the nonlinear forces, such as diagonal and post reactions, are linearized in the small interval between 2 consecutive steps so that the new equilibrium configuration is the solution of the matrix equation

$$\{P\} = [K]\ \{v\}$$

**Figure 5.**

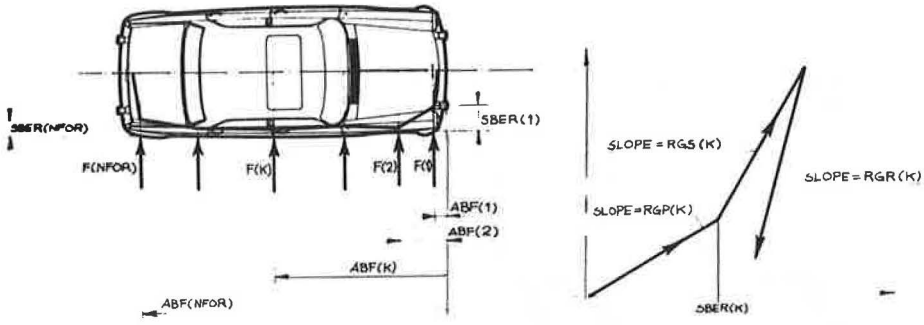


**Figure 6.**

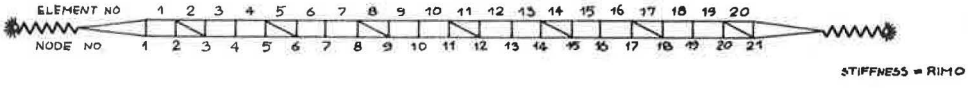


EXAMPLE :

MCAMP = 20 NPAL = 2 INDIAG = 2 NDIAG = 3

**Figure 7.**

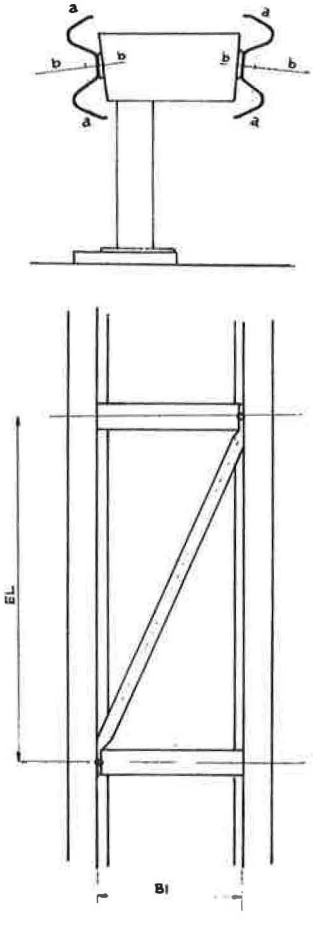


**Figure 8.**

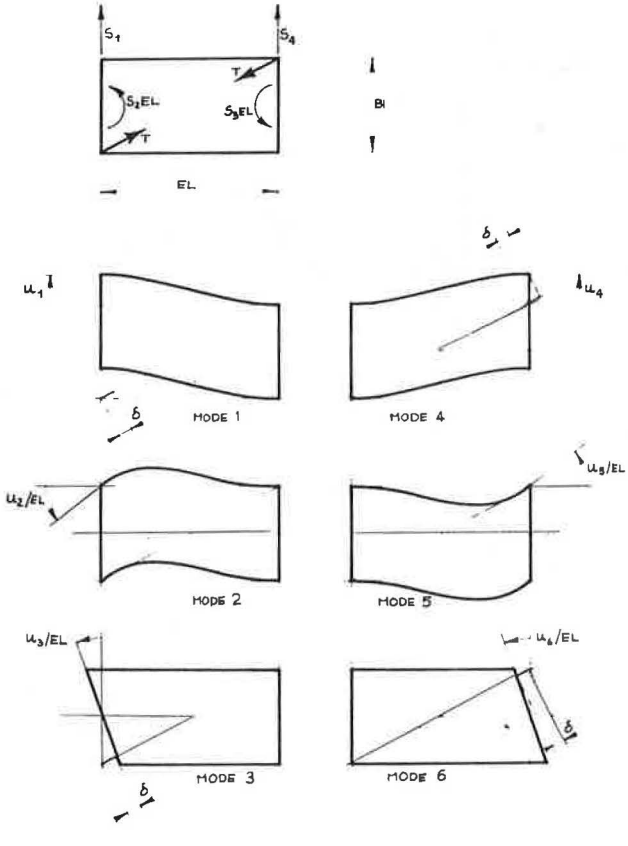

**Figure 9.**

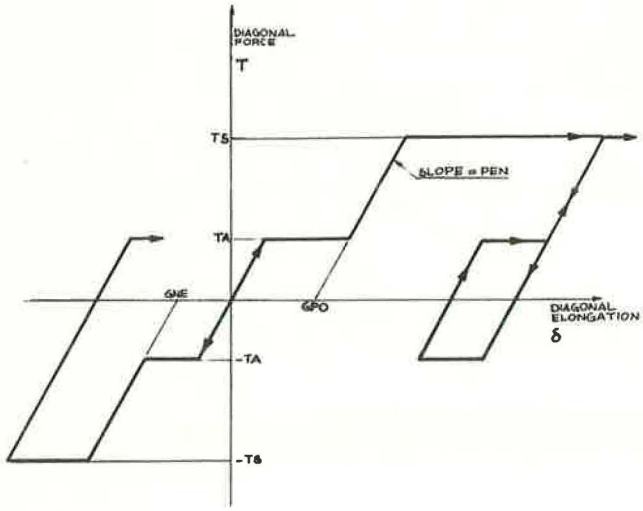


**Figure 10.**

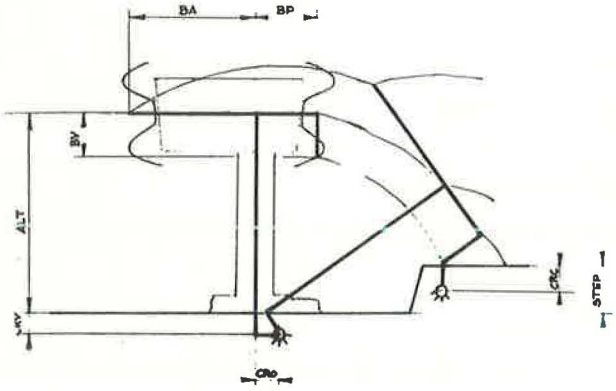


**Figure 11.**

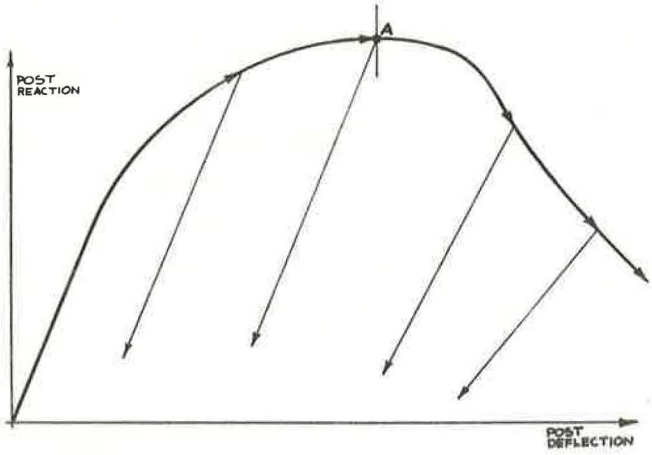

**Figure 12.**

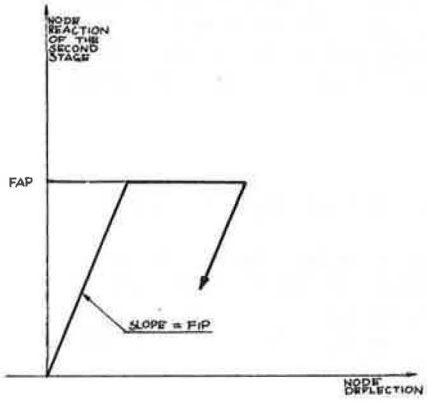


**Figure 13.**

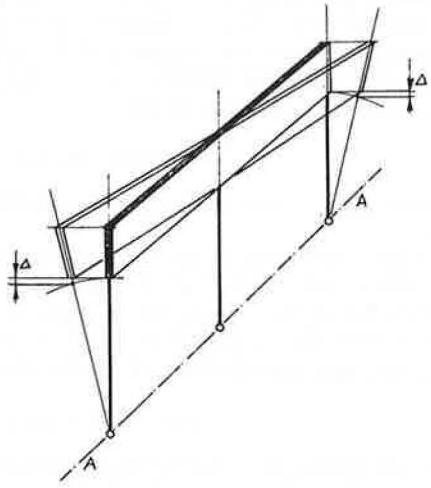


**Figure 14.**

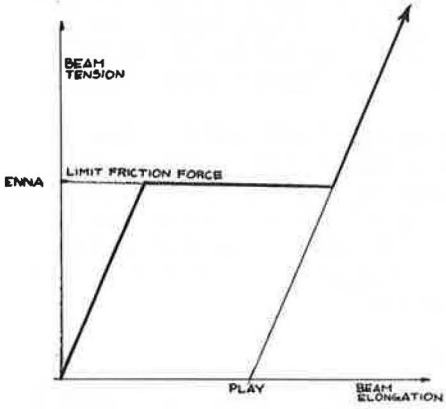


**Figure 15.**

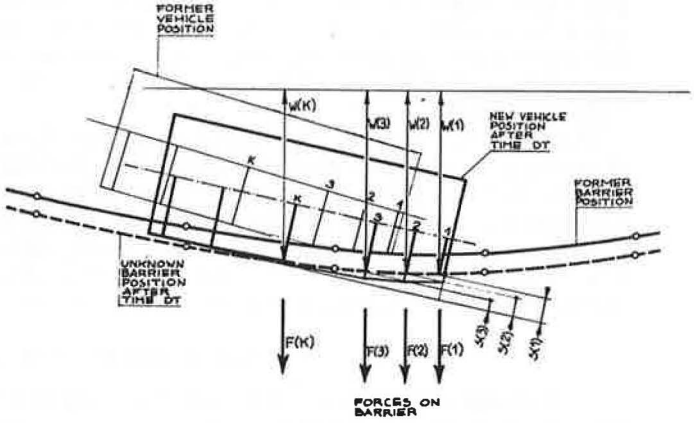


**Figure 16.**

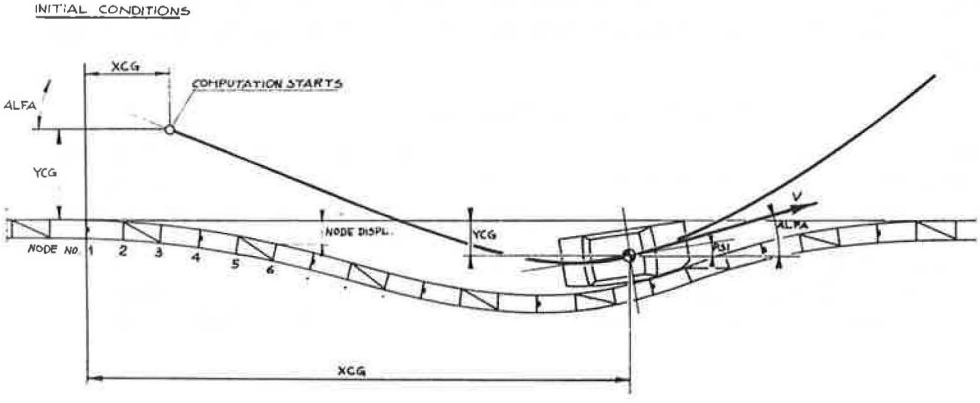

where {v} is the column matrix of the unknowns, which are the normalized displacement at every node (3 per node, Fig. 8) and the displacements of the points of contact between vehicle and barrier. The stiffness matrices [K] and {P} are computed at each step by superimposition of the contribution of the elements, posts, diagonals, vehicle contact forces, and barrier inertial forces (see Appendix). Some velocity-dependent forces (damping) may also be considered.

## INPUT DATA

Input data are divided in 3 main groups: vehicle data, barrier data, and computation parameters.

So far vehicle data have been prepared for 5 vehicles: a private car, 2 buses, a light lorry (3 t), and a heavy lorry (24 t at maximum loads). These vehicles will be used as test models for simulating impacts against different types of barriers. Computation parameters are mainly the position and the velocity of the vehicle at the start of computation (Fig. 16) and the maneuvers of the steering gear.

## OUTPUT DATA

The output is, for every time increment, the motion of the vehicle and the deformation of the barrier. The vehicle output data are position, attitude, deformation of the body, velocity, steer angle, and accelerations of several points of the vehicle. The barrier output data are the deflections of all the nodes.

Several computations have been prepared with input data corresponding to the full-scale tests conducted by the Institute for Road Safety Research. They compare the output of the simulation with experimental records. The comparison each time shows a fair agreement; in some instances the agreement was not so good because the experimental figure for the velocity of the vehicle could not be more accurately deduced from high-speed films.

Figures 17, 18, 19, and 20 show the comparison of the simulated final deformation of the barrier and the full-scale tests. The results were also visually presented by simulation films for comparison with the high-speed films of the actual tests. The simulation films were made with consecutive still pictures of a model, at $1/20$ scale, which was fixed for every picture in the configuration specified by the simulation system for every time increment. The simulation films showed an extremely good general agreement with the actual films taken from the same angle of view.

## CONCLUDING REMARKS

The digital simulation system that has been developed for impact tests against guardrail barriers has proved to be a valuable tool. It may reduce the cost of a test program or, better still, greatly enlarge the extent of a program without increasing the cost. In fact, it may permit a considerable reduction of the number of full-scale tests, which require a relatively long time for preparation, execution, and interpretation and are rather costly. For example, the first simulation program, which is now under development, comprises more than 200 simulations with different vehicles on different types of bridge parapets.

## ACKNOWLEDGMENTS

The author expresses his great obligation to the Institute for Road Safety Research for giving him an opportunity to undertake this work. He feels indebted to all those friends who helped him in this extensive and complex task. In particular, he wishes to thank H. G. Paar, W. H. M. van de Pol, and E. Thoënes of the Institute for Road Safety Research for their close collaboration and generous practical help. He also wishes to remember C. Cardani, P. Mantegazza, L. Puccinelli, and L. Savioni of Aerospace Department, Politecnico of Milan, for their very valuable cooperation.

**Figure 17.**

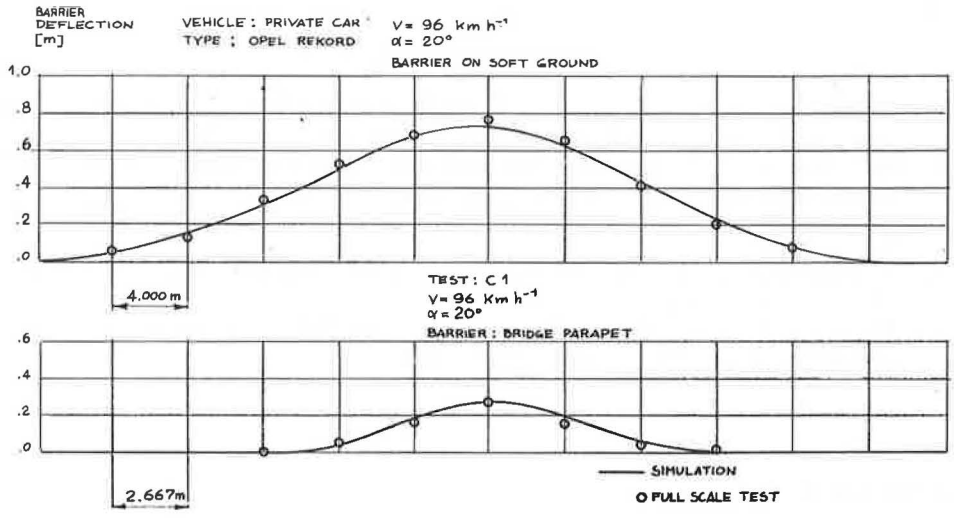


**Figure 18.**

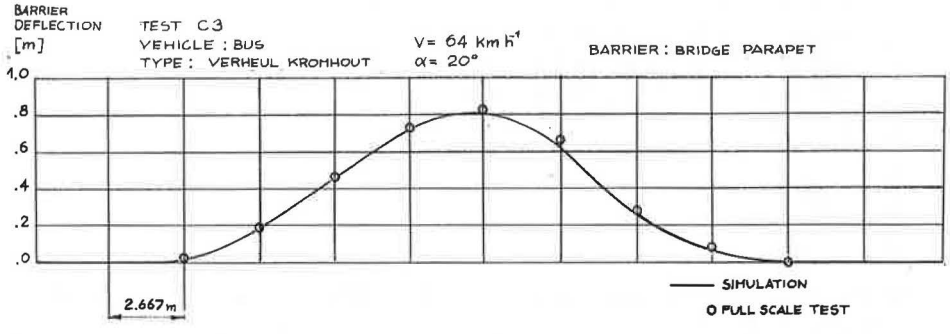


**Figure 19.**

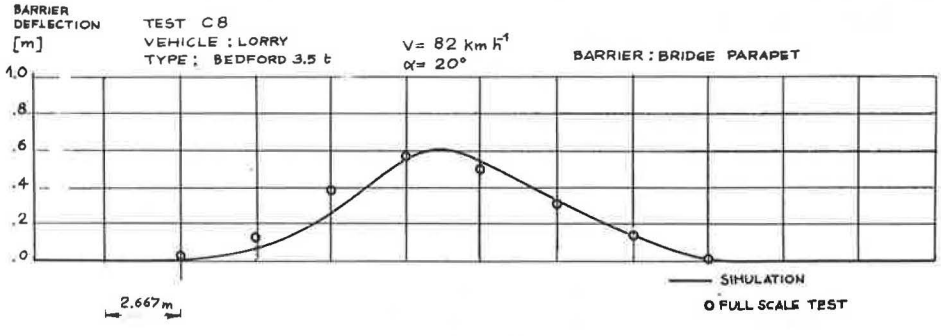


**Figure 20.**

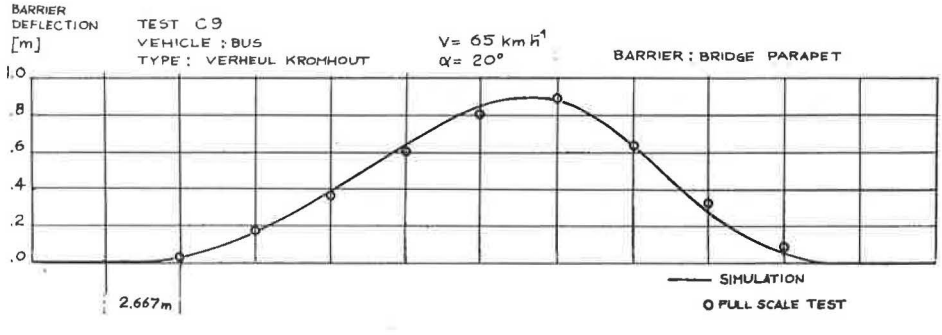

## REFERENCES


1. Schulze, R. A. P. J. Dynamic Tests With Guide-Rail Barrier Posts. IWECO-TNO, Delft, Rept. 5064, Vols. 1, 2, and 3, 1970. (In Dutch.)
2. McLean, A. The Use of Flight Simulation in the Development of the SAAB AJ 37 Viggen System. 7th ICAS Congress, Rome, 1970.
3. Przemieniechi, J. S. Theory of Matrix Structural Analysis. McGraw-Hill, New York, 1969.
4. Zienkiewicz, O. C. The Finite Element Method in Engineering Science. McGraw-Hill, London, 1971.
5. Giavotto, V., and Caprile, O. Barriere di sicurezza stradali. Fondamenti teorici ed applicazioni. Milan, SINA Rept., 1967.


# APPENDIX

## MATRIX EQUATIONS

The nomenclature used in the equations below is defined as follows:

u = normalized beam displacements,
w = displacements of the contact points,
v = displacements comprising u and w,
dt = time interval,
P = known terms,
K = stiffness,
T = diagonal force,
S = generalized element forces, and
F = contact forces.

The following brackets are used for matrix notation: { } for a column matrix and [ ] for every other matrix.

The 6 generalized forces $\{S'\}$ of 1 element, without a diagonal bar and without contact forces between the nodes, are related to the corresponding displacements $\{u\}$ by the matrix equation

$$\{S'\} = [k'] \{u\} \tag{1}$$

where $[k']$ is the element stiffness matrix.

If the diagonal bar exerts a force T, the generalized element forces undergo an increment by the quantities

$$\{S''\} = \{M\} T \tag{2}$$

which are proportional to T through the column matrix $\{M\}$.

If $\delta$ is the relative displacement of the end points of the diagonal bar, force T may have the following linearized expression:

$$T = T_0 + T_1\delta \tag{3}$$

which is valid for a small variation of $\delta$.

From Eq. 2 and the Principle of Virtual Works,

$$\delta = \{M\}^T \{u\} \tag{4}$$

where $\{M\}^T$ is the row matrix transpose of $\{M\}$.

Then from Eqs. 2 and 4,

$$\{S''\} = \{M\}\, T_1\, \{M\}^T\, \{u\} + \{M\}\, T_0 \tag{5}$$

If a certain number of contact points is present in the element between the nodes, the corresponding forces $\{F\}$ may have the following linearized expression, derived from the stiffness of the vehicle body:

$$\{F\} = \{F_0\} - [F_1]\, \{w\} \tag{6}$$

where $\{w\}$ is the absolute displacement of the contact points. From the barrier side, the displacements $\{w\}$ are the sum of the part:

$$\{w'\} = [L]\, \{u\} \tag{7}$$

due to elements and the part

$$\{w''\} = [H]\, \{F\} \tag{8}$$

due to the direct action of the forces. Then,

$$\{w\} = [L]\, \{u\} + [H]\, \{F\} \tag{9}$$

The contact forces $\{F\}$ must be equilibrated by increments of the generalized forces of the elements.

$$\{S'''\} = -[L]^T\, \{F\} \tag{10}$$

Solving Eq. 9 for $\{F\}$ by substituting in Eq. 6, we have the following additional equation for the unknowns $\{w\}$:

$$\{F_0\} = [H]^{-1}\, \{w\} + [F_1]\, \{w\} - [H]^{-1}\, [L]\, \{u\} \tag{11}$$

Superimposing the effects of the diagonal bar and the contact forces, we have finally

$$\left\{\begin{array}{c} S \\ \hline F_0 \end{array}\right\} = \left[\begin{array}{c|c} k_{uu} & k_{uw} \\ \hline k_{wu} & k_{ww} \end{array}\right] \left\{\begin{array}{c} u \\ \hline w \end{array}\right\} \tag{12}$$

where

$$\{S\} = \{S'\} + \{S''\} + \{S'''\} - \{M\}\, T_0 \tag{13}$$

$$[k_{uu}] = [k'] + \{M\}\, D_1\, \{M\}^T + [L]^T\, [H]^{-1}\, [L] \tag{14}$$

$$[k_{wu}] = [k_{uw}]^T = -[H]^{-1}\, [L] \tag{15}$$

$$[k_{ww}] = [H]^{-1} + [F_1] \tag{16}$$

Equation 12 may also be written, in a shorter notation, as

$$\{S_e\} = [k_e]\, \{v_e\} \tag{17}$$

where $[k_e]$ is a symmetrical matrix.

It is now possible to assemble the stiffness matrix of the complete structure by simply summing the contribution of the elements, posts, diagonals, vehicle contact forces, and barrier inertial forces to obtain the final matrix equation:

$$\{P\} = [K]\, \{v\} \tag{18}$$

Equation 18 must be solved for unknowns $\{v\}$, which are the node displacements $\{u\}$ and the absolute displacements $\{w\}$ of the contact points.

It is worth noting that matrix $[K]$ is a symmetrical band matrix if the unknowns are so ordered (at each step) that each of the unknowns $\{w\}$ is placed between the displacements $\{u\}$ of the 2 nodes of the element having the corresponding contact point. Therefore, the best time and memory occupation techniques are applicable to solve Eq. 18.