293

RMS | RJ
TRD | JB
File

NATIONAL COOPERATIVE
HIGHWAY RESEARCH PROGRAM REPORT

293

METHODS OF STRENGTHENING EXISTING HIGHWAY BRIDGES

TRANSPORTATION RESEARCH BOARD
NATIONAL RESEARCH COUNCIL

NATIONAL COOPERATIVE HIGHWAY RESEARCH PROGRAM
REPORT 293

METHODS OF STRENGTHENING EXISTING HIGHWAY BRIDGES

F. W. KLAIBER, K. F. DUNKER, T. J. WIPF
and W. W. SANDERS, JR.
Engineering Research Institute
Iowa State University
Ames, Iowa

RESEARCH SPONSORED BY THE AMERICAN ASSOCIATION OF STATE HIGHWAY AND TRANSPORTATION OFFICIALS IN COOPERATION WITH THE FEDERAL HIGHWAY ADMINISTRATION

AREAS OF INTEREST:

Structures Design and Performance
General Materials
Maintenance
(Highway Transportation)

TRANSPORTATION RESEARCH BOARD
NATIONAL RESEARCH COUNCIL
WASHINGTON, D.C. SEPTEMBER 1987

NATIONAL COOPERATIVE HIGHWAY RESEARCH PROGRAM

Systematic, well-designed research provides the most effective approach to the solution of many problems facing highway administrators and engineers. Often, highway problems are of local interest and can best be studied by highway departments individually or in cooperation with their state universities and others. However, the accelerating growth of highway transportation develops increasingly complex problems of wide interest to highway authorities. These problems are best studied through a coordinated program of cooperative research.

In recognition of these needs, the highway administrators of the American Association of State Highway and Transportation Officials initiated in 1962 an objective national highway research program employing modern scientific techniques. This program is supported on a continuing basis by funds from participating member states of the Association and it receives the full cooperation and support of the Federal Highway Administration, United States Department of Transportation.

The Transportation Research Board of the National Research Council was requested by the Association to administer the research program because of the Board's recognized objectivity and understanding of modern research practices. The Board is uniquely suited for this purpose as: it maintains an extensive committee structure from which authorities on any highway transportation subject may be drawn; it possesses avenues of communications and cooperation with federal, state, and local governmental agencies, universities, and industry; its relationship to the National Research Council is an insurance of objectivity; it maintains a full-time research correlation staff of specialists in highway transportation matters to bring the findings of research directly to those who are in a position to use them.

The program is developed on the basis of research needs identified by chief administrators of the highway and transportation departments and by committees of AASHTO. Each year, specific areas of research needs to be included in the program are proposed to the National Research Council and the Board by the American Association of State Highway and Transportation Officials. Research projects to fulfill these needs are defined by the Board, and qualified research agencies are selected from those that have submitted proposals. Administration and surveillance of research contracts are the responsibilities of the National Research Council and the Transportation Research Board.

The needs for highway research are many, and the National Cooperative Highway Research Program can make significant contributions to the solution of highway transportation problems of mutual concern to many responsible groups. The program, however, is intended to complement rather than to substitute for or duplicate other highway research programs.

NCHRP REPORT 293

Project 12-28(4) FY'85

ISSN 0077-5614

ISBN 0-309-04416-2

L. C. Catalog Card No. 87-51165

Price $12.00

NOTICE

The project that is the subject of this report was a part of the National Cooperative Highway Research Program conducted by the Transportation Research Board with the approval of the Governing Board of the National Research Council. Such approval reflects the Governing Board's judgment that the program concerned is of national importance and appropriate with respect to both the purposes and resources of the National Research Council.

The members of the technical committee selected to monitor this project and to review this report were chosen for recognized scholarly competence and with due consideration for the balance of disciplines appropriate to the project. The opinions and conclusions expressed or implied are those of the research agency that performed the research, and, while they have been accepted as appropriate by the technical committee, they are not necessarily those of the Transportation Research Board, the National Research Council, the American Association of State Highway and Transportation officials, or the Federal Highway Administration, U.S. Department of Transportation.

Each report is reviewed and accepted for publication by the technical committee according to procedures established and monitored by the Transportation Research Board Executive Committee and the Governing Board of the National Research Council.

Special Notice

The Transportation Research Board, the National Research Council, the Federal Highway Administration, the American Association of State Highway and Transportation Officials, and the individual states participating in the National Cooperative Highway Research Program do not endorse products or manufacturers. Trade or manufacturers' names appear herein solely because they are considered essential to the object of this report.

Published reports of the

NATIONAL COOPERATIVE HIGHWAY RESEARCH PROGRAM

are available from:

Transportation Research Board
National Research Council
2101 Constitution Avenue, N.W.
Washington, D.C. 20418

Printed in the United States of America

FOREWORD

By Staff
Transportation
Research Board

This report details the results of a study on various methods of strengthening highway bridges. The study included a thorough review of pertinent U.S. and international literature to determine the methods currently being used and to discover innovative ideas being considered. An extensive overview of all methods is presented. The types of structures most suitable for strengthening are identified, and the effectiveness of the various methods is discussed for these structures. A major part of the study was the development of a strengthening manual (Chapter 3) for use by practicing engineers. This manual describes the most effective techniques and indicates how they may be used in various types of structures to increase or restore their load carrying capacity. Bridge, maintenance, design, and construction engineers should all find the report of interest. Researchers may find the report useful to support or develop ideas for further research.

About one-half of the approximately 600,000 highway bridges in the United States were built before 1940, and many have not been adequately maintained. Most of these bridges were designed for lower traffic volumes, smaller vehicles, slower speeds, and lighter loads than are common today. In addition, deterioration caused by environmental factors is a growing problem. According to the Federal Highway Administration (FHWA), almost 40 percent of the nation's bridges are classified as deficient and in need of rehabilitation or replacement. Many of these bridges are deficient because their load carrying capacity is inadequate to carry today's traffic. Strengthening can often be used as a cost-effective alternative to replacement or posting.

Under NCHRP Project 12-28(4), "Methods of Strengthening Existing Highway Bridges," Iowa State University undertook a study to evaluate the feasibility and cost-effectiveness of various strengthening methods and to identify cost-effective innovative methods. The agency reviewed existing U.S. and international literature to evaluate strengthening methods that would benefit the greatest number of bridges and to identify new materials and innovations. A principal result of this study is a manual for use by practicing engineers to increase or restore the load carrying capacity of existing bridges.

The NCHRP project panel originally envisioned the research assignment on strengthening existing bridges in two phases. This report represents the culmination of Phase I research, but Phase II will not be conducted. Phase II was designed to pursue promising new techniques that were yet undeveloped. Although promising new techniques were discovered, most provided solutions to unique situations and would not have widespread application appropriate for a national, cooperative study. One technique, bonding of steel plates to concrete, does appear to hold promise for the future. However, the development and evaluation of the long-term performance of an adequate adhesive present a difficult problem beyond the resources available to this NCHRP assignment.

CONTENTS

PART II

ACKNOWLEDGMENTS

The research reported here was performed under NCHRP Project 12-28(4) by the Bridge Engineering Center of the Engineering Research Institute, Iowa State University.

F. Wayne Klaiber, Professor of Civil Engineering, Iowa State University, was the principal investigator and Wallace W. Sanders, Jr., Professor of Civil Engineering and Associate Director of the Engineering Research Institute, served as co-principal investigator. Kenneth F. Dunker, Associate Professor of Civil Engineering, and Terry J. Wipf, Assistant Professor of Civil Engineering, Iowa State University, were investigators on the project.

It would be extremely difficult to complete a project of this magnitude without the assistance of numerous individuals whose cooperation and help is gratefully acknowledged. The list includes several departments of the Iowa Department of Transportation: the Office of Bridges, the Maintenance Department, and the Office of Contracts. These offices provided information needed for various tasks of the research. Their support is sincerely appreciated. Special mention is given to Roger W. Gotschall, Chief Estimator of the Iowa Department of Transportation.

Numerous Iowa State University faculty members provided input into the study. Their assistance is acknowledged. The help of Professor Gerald W. Smith in the development of the economic analysis is especially appreciated.

Several Iowa contractors and state bridge departments assisted by providing various cost information; their help is gratefully acknowledged. Other state bridge departments that assisted in the study included Illinois, Minnesota, Missouri, and Wisconsin. The assistance of the Bridge Division of the Federal Highway Administration in providing data from the National Bridge Inventory is acknowledged.

Special thanks are accorded Donita K. Eberline, Donald L. Erickson, and Marcus J. Hall—graduate students in Civil Engineering—for their assistance in various phases of the project; their work was invaluable.

METHODS OF STRENGTHENING EXISTING HIGHWAY BRIDGES

SUMMARY

This report, henceforth referred to as a strengthening manual or simply manual, details the results of a study on the various methods of strengthening highway bridges. More than 375 references were reviewed to determine the bridge strengthening methods currently being used worldwide. In addition, contacts were made with appropriate organizations. Innovative ideas for bridge strengthening were considered along with established methods. These strengthening methods are identified, described, and categorized in the manual. The methods can be broadly categorized as member replacement, stiffness modification, member additions, and post-stressing.

Types of structures that show the greatest need for broad application of cost-effective strengthening techniques are steel stringer bridges, timber stringer bridges, and steel-through-truss bridges. Procedures are developed and outlined for selecting the most cost-effective method of strengthening each general type of structure.

The key result of this study is an extensive compilation, which can be used by practicing engineers, of the most effective techniques for strengthening existing highway bridges. This manual compiles, evaluates, and, in some instances, improves existing strengthening methods; it also presents some new procedures. An economic analysis for determining the cost-effectiveness of the various strengthening methods as well as descriptions of each of the strengthening methods and their application to the major types of bridges is presented in Chapter Three. That chapter provides designers with the instructions needed to evaluate the appropriateness of a given strengthening technique and to develop the procedure as it applies to a specific bridge. Other sections in the manual provide a considerable amount of background and reference information. An extensive bibliography (Appen. C) is provided for the user's reference.

CHAPTER ONE

INTRODUCTION AND RESEARCH APPROACH

1.1 RESEARCH PROBLEM STATEMENT

About one-half of the approximately 600,000 highway bridges in the United States were built before 1940, and many have not been adequately maintained. Most of these bridges were designed for lower traffic volumes, smaller vehicles, slower speeds, and lighter loads than are common today. In addition, deterioration caused by environmental factors is a growing problem. According to the Federal Highway Administration (FHWA), almost 40 percent of the nation's bridges are classified as deficient and in need of rehabilitation or replacement. Many of these bridges are deficient because their load-carrying capacity is inadequate for today's traffic. Strengthening can often be used as a cost-effective alternative to replacement or posting.

The live-load capacity of various types of bridges can be increased by using different methods, such as (1) adding members, (2) adding supports, (3) reducing dead load, (4) providing continuity, (5) providing composite action, (6) applying exter-

nal post-tensioning, (7) increasing member cross section, (8) modifying load paths, and (9) adding lateral supports or stiffeners. Some methods have been widely used, but others are new and have not been fully developed. The need to compile, evaluate, and improve existing methods as well as to develop new procedures, equipment, and materials for increasing or restoring the load-carrying capacity of existing bridges was the reason for this investigation.

1.2 RESEARCH OBJECTIVES

The objectives of this investigation were to evaluate the feasibility and cost effectiveness of present strengthening methods as applied to various types of bridges and to identify cost-effective innovative methods. The objectives required completion of the following tasks:

Task 1. Thoroughly review available literature and contact the appropriate organizations to identify, describe, and categorize methods for strengthening existing highway bridges. Consider innovative ideas as well as established methods.

Task 2. Determine which types of structures show the greatest need for broad application of cost-effective techniques for strengthening.

Task 3. Evaluate the cost effectiveness of methods for strengthening bridge structures. Identify new materials and innovative techniques for further study.

Task 4. Prepare a manual, for use by practicing engineers, that describes the most effective techniques for strengthening existing highway bridges.

Task 5. Prepare a final report documenting all research. The manual prepared in Task 4 should be the main entity of the final report. The additional findings of the investigation should simply provide supplementary or background information.

1.3 SCOPE OF INVESTIGATION

This study investigated strengthening procedures that can be used on the majority of bridges; the only bridges excluded were those that demand highly specialized design techniques such as suspension, curved, and cable-stayed bridges. Although box-beam bridges also involve unique design considerations, some of the simpler techniques for strengthening them are included in the manual. It should be noted that several of the techniques presented in the strengthening guidelines (Sec. 3.2) may be applicable to the excluded bridges. However, before proceeding to strengthen one component, because of the complex interaction of the various elements, the procedure's effect on the remaining bridge components needs to be thoroughly investigated.

No special considerations were given to skewed bridges; however, the majority of the strengthening techniques presented in the strengthening guidelines (Secs. 3.3 to 3.10) would be applicable to skewed bridges. Figure 1 shows the percentage of bridges in various ranges of skew angles (i.e. 1 to 10 deg, 11 to 20 deg, etc.). Right angle bridges (0 deg of skew) are by far the most prevalent; the percentages of bridges in each of the other ranges is less than 10 percent. Thus, even though skewed bridges were not specifically investigated, the guidelines developed do cover the majority of the bridges.

Although bridge span length was not a limiting factor in developing the various strengthening procedures, the majority

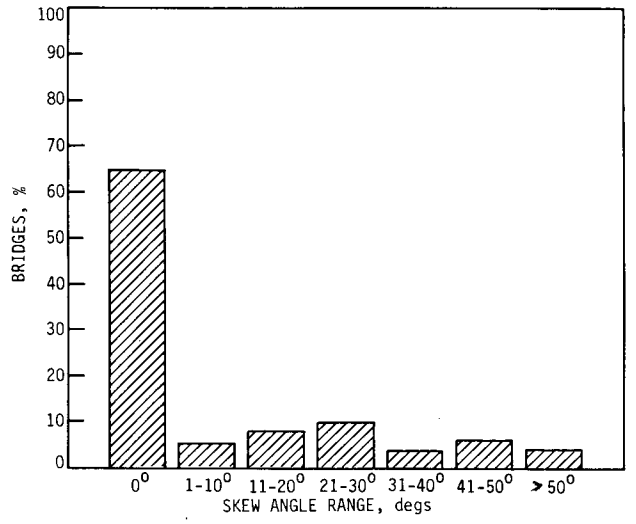

Figure 1. Separation of bridges based on skew angle.

of the techniques apply to short-span to medium-span bridges. Several of the strengthening techniques are equally effective for long-span bridges.

All strengthening procedures presented apply to the superstructure of bridges with one exception. Several methods have been included for the strengthening of reinforced concrete pier columns. No information is included on the strengthening of existing foundations because such information is dependent on soil type and conditions, type of foundation, and forces involved and, thus, is not readily presentable in a manual format.

The techniques used for strengthening, stiffening, and repairing bridges tend to be interrelated so that, for example, the stiffening of a structural member of a bridge will normally result in its being strengthened also. To minimize misinterpretation of the meaning of strengthening, stiffening, and repairing, the research team's definitions of these terms are given below. In addition to these terms, the investigators' definitions of maintenance and rehabilitation, which are sometimes misused, are also given. The definitions given are not suggested as the best or only meanings for the terms but rather are the meanings of the terms as they are used in this report.

Maintenance. The technical aspect of the upkeep of the bridges; it is preventative in nature. Maintenance is the work required to keep a bridge in its present condition and to control potential future deterioration.

Rehabilitation. The process of restoring the bridge to its original service level.

Repair. The technical aspect of rehabilitation; action taken to correct damage or deterioration on a structure or element to restore it to its original condition.

Stiffening. Any technique that improves the in-service performance of an existing structure and thereby eliminates inadequacies in serviceability (such as excessive deflections, excessive cracking, or unacceptable vibrations).

Strengthening. The increase of the load-carrying capacity of an existing structure by providing the structure with a service level higher than the structure originally had (sometimes referred to as upgrading).

In recent years the FHWA and National Cooperative Highway Research Program (NCHRP) have sponsored several studies on bridge repair, rehabilitation, and retrofitting. Inasmuch

as some of these procedures also increase the strength of a given bridge, the final reports on these investigations are excellent references. These references, plus the strengthening guidelines presented in Chapter Three, will provide information an engineer can use to resolve the majority of bridge strengthening problems. The FHWA and NCHRP final reports related to this investigation include the following:

- *NCHRP Report 206,* "Detection and Repair of Fatigue Damage in Welded Highway Bridges," 1978 (*103*).
- *FHWA-RD-78-133,* "Extending the Service Life of Existing Bridges by Increasing their Load-Carrying Capacity," 1978 (*32*).
- *NCHRP Report 222,* "Bridges on Secondary Highways and Local Roads—Rehabilitation and Replacement," 1980 (*343*).
- *NCHRP Report 226,* "Damage Evaluation and Repair Methods for Prestressed Concrete Bridge Members," 1980 (*291*).
- *NCHRP Project 12-17 Final Report,* "Evaluation of Repair Techniques for Damaged Steel Bridge Members: Phase I," 1981 (*211*).
- *NCHRP Report 243,* "Rehabilitation and Replacement of Bridges on Secondary Highways and Local Roads," 1981 (*342*).
- *FHWA-RD-82-041,* "Innovative Methods of Upgrading Deficient Through Truss Bridges," 1983 (*277*).
- *FHWA-RD-83-007,* "Seismic Retrofitting Guidelines for Highway Bridges," 1983 (*11*).
- *NCHRP Reports 271,* "Guidelines for Evaluation and Repair of Damaged Steel Bridge Members," 1984 (*290*).
- *NCHRP Report 280,* "Guidelines for Evaluation and Repair of Prestressed Concrete Bridge Members," 1985 (*289*).
- *NCHRP Synthesis of Highway Practice 119,* "Prefabricated Bridge Elements and Systems," 1985 (*302*).

Two of these references are of specific interest in strengthening work. The second reference in the foregoing list is an FHWA investigation into methods of increasing the load-carrying capacity of bridges that are not adequate for current service loads. In addition to bridge rehabilitation and replacement, the third reference also presents several techniques to increase the capacity of various components of bridges.

1.4 RESEARCH APPROACH

1.4.1 Task 1

The purpose of Task 1 was to determine what techniques and procedures are presently being used to strengthen existing bridges. The research team used three different approaches to obtain the desired information: literature review, questionnaires, and personal correspondence. In the following sections, these three approaches will be briefly described.

1.4.1.1 Literature Review

Computerized literature searches were made using the Highway Research Information Service and the Computerized Engineering Index. In addition to searching these two sources, the Geodex System—Structural Information Service— was used to locate additional pertinent references. In an attempt to locate German and French articles, volume indexes were reviewed from 1945 to present. More than 500 articles were located on bridge strengthening and closely related areas. Of these, approximately 95 were written in a foreign language.

As articles were reviewed, a standard reference review sheet (RRS) was prepared for each article for future reference. Some of the information recorded on the RRS was bibliographic data for the article, country, language, strengthening methods, research or application, cost, and overall rating of the article. When each article was initially evaluated, an RRS was completed. The next reviewer of the same article then checked the RRS. Because time limitations precluded computer storage of the articles, each individual RRS was used in the investigation.

The 379 references included in this report are evidence that approximately two-thirds of the articles initially located were rated favorably.

1.4.1.2 Questionnaire Development and Survey Techniques

In addition to the literature review, a survey was conducted to obtain unpublished information on strengthening techniques and to identify agencies involved with bridge strengthening. Two questionnaires were developed to accomplish this. Questionnaire 1 (see Exhibit A-1 in Appendix A) was developed for distribution to federal highway bridge engineers, state bridge engineers, state maintenance engineers, county engineers, various technical committee members, and consultants. Questionnaire 2 (see Exhibit A-2 in Appendix A) was developed for distribution to manufacturers of products related to bridge strengthening.

The questionnaires were mailed with a cover letter and a postage paid return envelope. The questionnaire cover letter (see Exhibit A-3 in Appendix A) briefly described the sponsorship of the project, the objective of the research, and the reason for the questionnaire. In some cases, the third paragraph of this letter was altered to address a particular survey group more specifically. The development of the two questionnaires, the cover letter, and some of the survey techniques employed were influenced by recommendations made by Dillman (*87*) for a successful mail survey. Input was also obtained from the Statistical Laboratory of Iowa State University (ISU). Prior to distribution, the questionnaires and the standard cover letter were submitted to and approved by the NCHRP Project Panel 12-28(4).

Space was provided on both questionnaires for respondents to suggest the names of bridge engineers, research institutions, product manufacturers, and consulting firms involved with bridge strengthening. If the person or organization suggested had not already received a questionnaire, they were contacted. Most of the consultants surveyed were identified in this manner.

To get a representative sample of the bridge-strengthening techniques being used in all 50 states, federal and state bridge engineers were singled out from other survey groups to receive reminders to increase the response level.

1.4.1.3 Personal Correspondence

To locate foreign published and unpublished bridge strengthening information, the research team made personal contacts with colleagues in foreign countries as well as the United States.

Table 1. Foreign correspondence.

Country	Number of Individuals or Agencies Contacted
Australia	1
Belgium	2
Canada	13
Denmark	2
Finland	1
France	4
Great Britain	11
India	1
Italy	1
Japan	8
Netherlands	2
New Zealand	2
Norway	1
Scotland	1
South Africa	1
Spain	2
Sweden	3
Switzerland	7
Turkey	1
West Germany	3

Personal letters briefly describing the objectives of the project and the type of information desired were transmitted.

The number of individuals or agencies contacted in foreign countries is given in Table 1. Included in this list are the 21 foreign members of the Organization for Economic Cooperation and Development (OECD) Committee. This group met in Paris in 1983 and developed a report entitled "Bridge Rehabilitation and Strengthening" (*239*). The report reviewed the needs, policies, and techniques used for bridge rehabilitation and strengthening in the OECD member countries. To obtain additional information from this knowledgeable group, each member was contacted. Of the 67 different individuals and agencies contacted, approximately two-thirds responded. The material provided by a large number of the respondents was quite valuable and has been included in various sections of this report. Essentially every respondent mentioned the need and value of the strengthening research and requested a copy of the final report when available.

1.4.2 Task 2

Task 2 involved determining the types of structures to which strengthening techniques could be most effectively applied. The research plan proposed a survey and site inspections as techniques for meeting the task objective. At the recommendation of the project panel, a third technique was added: analysis of the data in the National Bridge Inventory (NBI). All three techniques were applied to the task.

Use of the NBI made feasible a more complete approach to determining bridges in need of strengthening. The research team focused on the types of bridges identified by Item 43 in the NBI: structure type-main, which includes bridges on both the federal aid system and the non-federal aid system. From these data the research team identified the 15 most common bridge types in the NBI, excluding culverts and tunnels. The 15 most common bridge types accounted for almost 92 percent of all bridges in the inventory.

The NBI data were reviewed with the objective of identifying items that would indicate which bridge types were in need of strengthening. The following data items were examined for the 15 common bridge types: strengthening recommended by inspector, structural work recommended by inspector, average structural adequacy and safety, average remaining life, and anticipated retirements based on numbers of bridges constructed and average lives. The data generally agreed on which bridge types have a critical need for strengthening in order to avoid the cost of replacement bridges.

The responses to the survey question, "For what types of bridges do you see a need for the development of a design procedure for strengthening?," were compared with the data from the NBI. Because the survey responses were not confined to the NBI coding, the comparison could not be exact. The question responses, however, generally agreed with conclusions reached from the NBI.

Only bridges in Iowa were inspected because of limitations of time and funds allocated for travel. For the site inspections, the bridge embargo map published by the Iowa Department of Transportation (Iowa DOT) was used as a guide. The bridge embargo map contains all bridges on state and federal highways that are posted with reduced truck loads or single truck restrictions. About one-third of the embargoed bridges inspected could be strengthened with minimum rehabilitation, about one-third could be strengthened with major rehabilitation, and the remaining one-third required replacement. These groupings are based on about 20 Iowa bridges and cannot be generalized to the entire U.S. inventory of bridges.

The approach outlined earlier for Task 2 enabled the research team to concentrate on strengthening methods for bridge types with a critical need for strengthening or replacement. This approach may very well be beneficial for setting priorities for NCHRP research programs beyond this project.

1.4.3 Task 3

Task 3 consisted of two separate parts. One of the undertakings was the development of a procedure for determining the cost effectiveness of methods for strengthening various bridges. The second charge of this task required the identification of new materials and innovative strengthening techniques which required additional investigation.

1.4.3.1 Economic Analysis

An initial literature review indicated that a widely applied method of evaluating cost effectiveness of strengthening versus replacement included consideration of the initial strengthening cost as a percentage of the initial replacement cost. Although this is a very basic approach for measuring cost effectiveness, determining the percentage at which replacement becomes a more cost-effective solution is a difficult procedure. Comments found in the literature review suggested different percentages, each with little validation. As will be seen in the questionnaire responses discussed in Task 1 (see Sec. 2.2), agreement on a percentage of replacement cost varied widely among bridge engineers. In addition, several of the questionnaire respondents took issue with this approach of evaluating cost effectiveness and commented on the importance of considering all aspects of the strengthening and replacement alternatives (e.g., annual maintenance and operating costs for each alternative, service lives, etc.). All of these factors indicated that a method of determining the cost effectiveness of bridge strengthening that not only included initial strengthening costs but also included life cycle costs and user benefits to be gained by strengthening or replacement needed to be developed.

The method developed for evaluating the cost effectiveness of strengthening bridges for use in the strengthening manual (Task 4) is based on determination of Equivalent Uniform Annual Costs (EUACs), which are commonly used in engineering economy studies. The models and equations used to determine the EUACs for the strengthening and replacement alternatives met the requirements for a flexible approach to determining cost effectiveness including life cycle costs and user benefits.

The EUAC models are presented in a generalized form that allows the manual user to introduce individualized cost data into the equations. However, as an aid to the manual user, cost data for most of the variables used in the EUAC models are included in the manual. Replacement and annual maintenance costs, in addition to information on bridge removal costs, traffic control costs, and remaining service life, was obtained from supplementary surveys of several Midwestern states. Local contractors provided the removal cost information in the manual. The level of service factor used in the strengthening model was confined to user costs associated with motor vehicle accidents at bridge sites, although this factor could be expanded to include other less tangible user costs associated with the existing bridge.

Cost data for each of the strengthening methods identified in Task 2 were obtained from several sources. The majority of the cost data provided in the manual was obtained from bid estimates of each strengthening method provided by the Iowa DOT. Contract specifications for each strengthening method were developed for typical bridges in need of strengthening and bid estimates were calculated using them. Only a few of the strengthening methods reviewed in the literature search provided detailed cost information that could be effectively used in the manual. These costs were supplemented where possible with cost data received from questionnaire respondents. Because of the wide variety of factors involved with some strengthening methods, it was difficult to obtain meaningful cost data from them.

A generalized model was developed because each bridge is different and requires a unique solution for the most cost-effective method of strengthening. The EUAC models and equations developed provide the user with a flexible method of calculating the cost effectiveness of strengthening bridges. Examples were developed that illustrate the EUAC procedure as well as supplementary cost data on the various EUAC variables.

1.4.3.2 New Materials

In an attempt to identify new materials that might have application in bridge strengthening, several sources were explored. In addition to the literature review previously described, manufacturers were contacted. Consultations were held with engineers in materials and aerospace application areas.

Essentially no new materials were identified that would be suitable for use in bridge strengthening. The procedure of bonding steel plates to steel and steel plates to concrete, however, is somewhat related to the topic of new materials. Work has been done in the area of bonding steel to steel in this country (*205, 2*); however, to the authors' knowledge no work has been done in the area of bonding steel plates to concrete. As stated in Appendix B, the use of steel plates bonded to concrete for strengthening has been done for more than 20 years in some foreign countries. Although this procedure has potential, it has not been included in Chapter Three because there are still numerous problems to be resolved.

In the bonding of steel to either steel or concrete, there is a question of permanency. Hoigard and Longinow (*132*) found significant losses in bond strength when steel plates bonded to each other with an epoxy adhesive were subjected to a simulated rain environment. A 14 percent loss in strength was found when specimens were submerged for a period of approximately 700 hours. Assuming 6 hours of "wet time" per week, 700 hours represent approximately 2.25 years.

Composite materials were the only "new materials" identified. While composite materials are new to the construction industry, they have been used in the aircraft industry for more than 20 years. Composite materials—that is, materials consisting of two or more distinct parts—are obtained by combining fibers with a variety of resin systems (usually epoxy or polyester). The most widely used fibers include fiberglass, kevlar, and carbon or graphite. Depending on the fiber used, tensile modulus values range from 3×10^7 to 10×10^7 psi and strengths range from 275,000 to 700,000 psi. The real advantage of composite materials is the large ratio of strength to weight. Thus, composites are widely used in applications (commercial and military aircraft, ships, automobiles, trucks) where lighter weight translates into energy savings and, thus, dollar savings. Although the weight factor is not as critical in bridges as it is in the previously mentioned applications, weight reduction is obviously desirable in strengthening work. While the properties of composite materials are sensitive to the environment, the main disadvantage of composite material in bridge work is the cost: composite materials still cost approximately $20 per pound despite price decreases of 50 percent in the past 5 years. Additional price reductions expected in the next few years may make composites more feasible for use in bridge strengthening.

1.4.4 Task 4

For the information accumulated in Task 1 to be useful to the practicing engineer, it must be organized and presented in a manual format that is readily accessible and easy to use. The

development of such a manual was the objective of Task 4.

Two formats were considered for the strengthening manual. One format would present information based on bridge type, while the other format would organize information by strengthening method. Outlines for both formats were prepared and submitted to the project engineer with a request that they be sent to the project panel for their review. The preference of the majority of the panel members and the research team was to develop the manual around strengthening methods. Chapter Three of this report is the strengthening manual or the application portion of this investigation. Sections 3.1 and 3.2 contain general information and the economic analysis, respectively. Sections 3.3 through 3.10 present the various strengthening methods (Sec. 3.3, Lightweight Deck Replacement; Sec. 3.4, Providing Composite Action Between Bridge Deck and Stringers; Sec. 3.5, Increasing Transverse Stiffness of a Bridge; Sec. 3.6, Improving the Strength of Various Bridge Members; Sec. 3.7, Adding or Replacing Members; Sec. 3.8, Post-tensioning Various Bridge Components; Sec. 3.9, Strengthening Critical Components; Sec. 3.10, Developing Additional Bridge Continuity).

Decision-making aids that assist the user in determining the applicability of a particular strengthening technique for a particular situation are provided in Chapter Three for some of the strengthening techniques. These decision aids, employed with the economic analysis presented in Section 3.2, will assist the user in choosing a cost-effective strengthening technique.

As previously noted, the strengthening information in Chapter Three has been organized by strengthening techniques and procedures. For those who desire to strengthen a particular type of bridge a table has been provided in Section 3.1.3. This table assists the user in determining various strengthening procedures that may be used on a particular type of bridge.

For each of the eight strengthening categories of Chapter Three, brief case histories, which describe where the procedure has been used, are provided. For more information on the various strengthening procedures, the user may make use of the comprehensive literature review in Chapter Two.

1.4.5 Task 5

The purpose of Task 5 was to prepare a final report documenting all the research undertaken in this investigation. Chapter Three of the final report is essentially the strengthening manual; the other chapters and the appendixes provide supplementary and background information. The bibliography prepared for the final report is provided in Appendix C. The majority of the entries in the bibliography were also used in the development of the report and, thus, are included therein as cited references.

CHAPTER TWO

FINDINGS

This chapter summarizes the vast amount of information assimilated in Task 1 from the literature review and questionnaire survey as well as the results of Task 3. To determine which types of structures are most in need of strengthening (Task 3), the research team made use of NBI data, site inspections, and questionnaires. A summary of the findings from these techniques is presented in Section 2.1. The summary of the questionnaire data is presented in Section 2.2; the summary of the literature is presented in Section 2.3.

2.1 TYPES OF STRUCTURES SHOWING MOST NEED OF STRENGTHENING

2.1.1 Introduction

Because no comprehensive bridge management system for the entire United States is currently available, three approaches were taken to determine which bridge types could be effectively strengthened. The collective experience and expertise of the bridge inspectors who have evaluated the nation's bridges were used to examine the pertinent data contained in the NBI (current as of 23 January 1986). Needs perceived by bridge engineers and other bridge specialists in government offices and private consulting practices were solicited in late 1985 by means of the questionnaire described in Section 1.4.1.2, and the responses were tabulated. Site inspections of numerous Iowa bridges, many of which were load-restricted, were conducted in 1986. Each of these three approaches will be discussed in the following sections.

2.1.2 National Bridge Inventory (NBI)

2.1.2.1 Reliability of Bridge Records

The NBI, now essentially complete, contains records from Structure Inventory and Appraisal (SI&A) sheets on more than 575,000 highway bridges having spans of at least 20 ft, culverts of bridge length, and tunnels. The records are placed on the SI&A sheet and prepared according to a coding guide (*100*) from the FHWA, which often is supplemented by a guide from state or local authorities such as that of the Iowa DOT (*234*). (FHWA is revising the SI&A sheet and associated coding guide.

Item numbers cited in the following may be changed in the revision.)

Each NBI bridge record can contain up to 90 items, some of which may not be used because of local policies or lack of information. Those items judged most relevant and reliable for determining bridge strengthening needs are year built (Item 27); structure type, main (Item 43); superstructure condition rating (Item 59); substructure condition rating (Item 60); estimated remaining life (Item 63); inventory rating (Item 66); structural condition rating (Item 67); type of work, proposed improvement (Item 75).

These items were further combined to determine bridge life (sum of age in 1985, determined from Item 27 and Item 63) and structural adequacy and safety (the S1 portion of the FHWA Sufficiency Rating Formula, which is computed from Items 59, 60, and 66).

Questions that need to be asked about such a large data base such as the NBI are, How reliable are the data? How can interpretation errors be minimized? A review of the first 50 bridge records from each state or reporting governmental unit showed few obvious coding errors but many blanks, often, apparently, as a result of state or local policies. In order to avoid misinterpretations of the bridge records, all computer sort runs were programmed to reject any records containing blanks or unauthorized characters in items that were to be examined in a particular sort.

Those records having correctly coded bridge types for Item 43 were examined by means of a matrix using row headings for the design/material portion of the type and column headings for the design/construction portion of the type. Masonry through-trusses, steel slabs, or other unusual or fictitious bridge types in the matrix were fewer than 1 percent. In order to work with the most reliable portions of the data, researchers selected only the 15 most common bridge types as types for further study. Those bridge types are listed and ranked by number of records in the NBI in Table 2. The 15 bridge types represent approximately 92 percent of the more than 481,000 highway bridge records in the NBI. (The remainder of the 575,000 NBI records are for tunnels and culverts.)

A table prepared for the common bridge types and years built indicated either errors in the coding for some bridges or an inadequacy in the type classification for the NBI. Approximately 5 percent of the prestressed concrete bridges are coded showing "year built" prior to the 1950s. Some of the apparent errors may be caused by insertion of "00" when year built was unknown; the category for bridges built in 1900 and earlier accounted for more than an average share of the 5 percent. It is also quite possible that older bridges, which have been recently widened with prestressed concrete or which have had main spans replaced with prestressed concrete, were classified as prestressed concrete structures using the original date of construction for year built. No conclusions could be reached regarding the apparent errors, and those errors could pervade data for all bridge types. The data, therefore, were not screened to eliminate bridges with unusual "year built" coding.

Overall, the NBI data are relatively free of obvious errors. There are some definite and some probable coding errors, but those errors did not exceed 5 percent and often were less than 1 percent for the NBI items checked. In order to analyze the NBI records most accurately, researchers rejected records having obvious errors or significant omissions.

Table 2. Fifteen common bridge types (NBI)

NBI Item 43	Main Structure Type	Number of Bridges	Percentage of Bridges
302	Steel stringer	130,892	27.2
702	Timber stringer	58,012	12.0
101	Concrete slab	42,450	8.8
402	Continuous steel stringer	36,488	7.6
310	Steel through-truss	31,206	6.5
104	Concrete tee	26,798	5.6
502	Prestressed concrete stringer	26,654	5.5
201	Continuous concrete slab	21,958	4.6
102	Concrete stringer	16,884	3.5
505	Prestressed concrete multiple box	16,727	3.5
303	Steel-girder floor beam	9,224	1.9
204	Continuous concrete tee	7,467	1.6
111	Concrete-deck arch	6,245	1.3
501	Prestressed concrete slab	5,561	1.2
504	Prestressed concrete tee	4,687	1.0
	Total	441,253	91.8

2.1.2.2 Bridge Strengthening Needs

The most direct approach to determining the NBI bridge types in need of strengthening is to examine Item 75, the improvements recommended by the bridge inspector. In the 15 common bridge types, inspectors recommended some improvement for more than 49 percent of the bridges. For the bridges for which improvements were recommended, the types of improvements are ranked in Figure 2. The overwhelming choice of improvement, accounting for two-thirds of the recommendations, was replacement due to condition. This, of course,

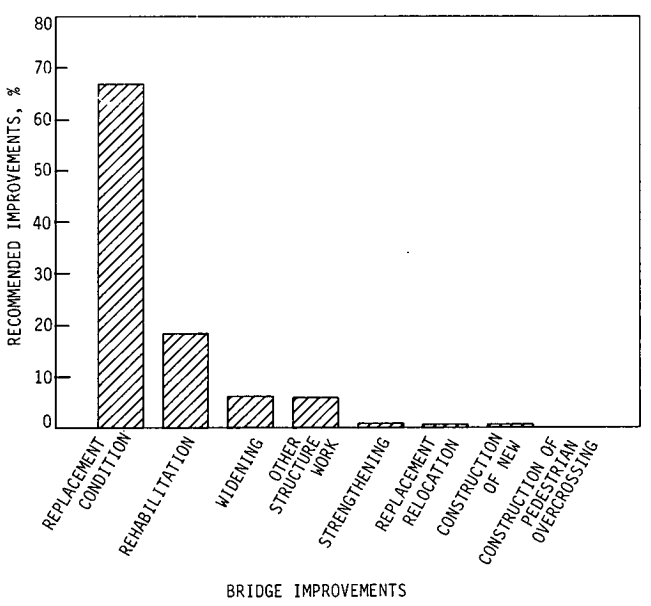

Figure 2. Bridge improvements recommended by inspector (NBI).

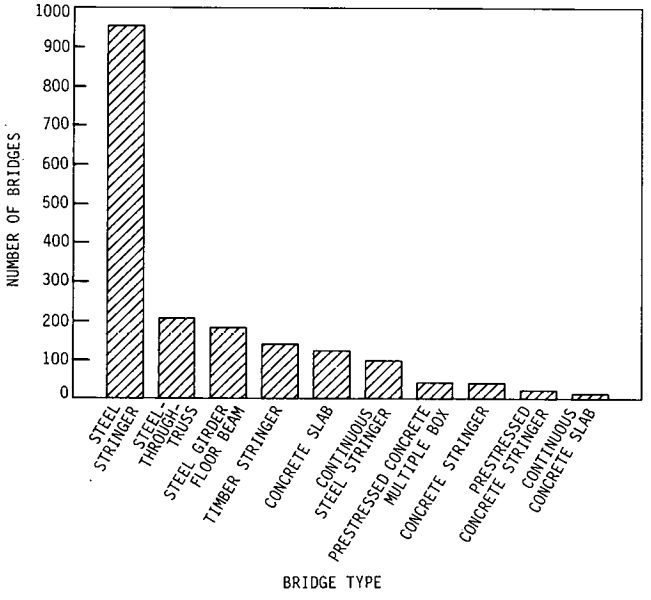

Figure 3. Strengthening recommended by inspector, ranked by bridge type (NBI).

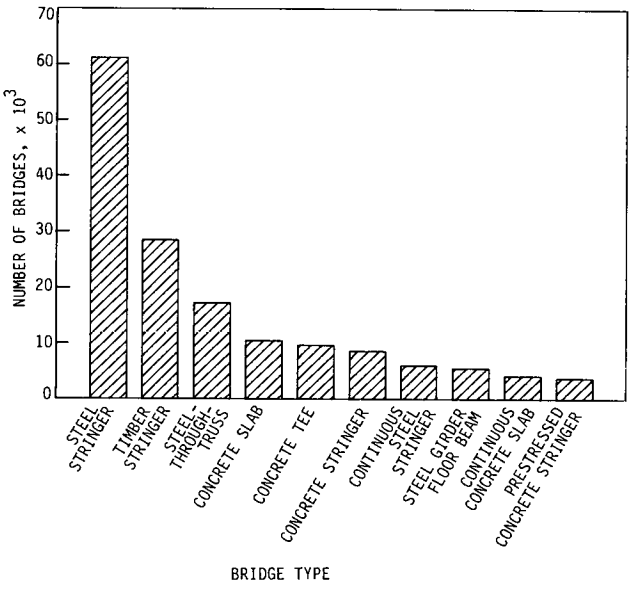

Figure 4. Structural work recommended by inspector, ranked by bridge type (NBI).

means that one-third of the nation's bridges would be replaced in the near future if inspectors' recommendations were followed.

Figure 2 also shows that only 0.9 percent of the recommendations were to strengthen bridges. Several reasons probably account for the few strengthening recommendations. Some inspectors may not recognize that strengthening is a means to prolong bridge life, and in some states inspectors may not have the option of strengthening. Another reason why strengthening is seldom suggested could be the limitations in the NBI coding. Because an inspector cannot code both strengthening and widening, for example, he/she would be forced to code either replacement or rehabilitation. An additional reason for the large number of replacement recommendations could be the inspectors' intent to make known the urgency of bridge safety problems. Or, perhaps federal and state bridge funding programs are structured or perceived to be structured in ways that make replacement much more attractive than any other type of rehabilitation.

For those bridges for which strengthening was recommended, the responses are ranked by number, for bridge types, in Figure 3. The recommendations for strengthening steel stringer bridges account for more than half of the recommendations. The next four bridge types in the ranking are steel through-truss, steel-girder floor-beam, timber-stringer, and concrete-slab.

A less direct approach is to consider the bridge types for which some type of structural work—replacement, rehabilitation, widening, other structure work, strengthening—was recommended by the inspector. It is quite possible that strengthening could be used instead of replacement or as a part of rehabilitation, widening, or other structure work.

The bridge types for which some type of structural work was recommended are ranked by number of recommendations in Figure 4. Comparing the bridge types ranked in the first five in Figure 4 with those ranked in the first five in Figure 3 reveals that the rankings are very similar. Four of the first five in each figure are the same. The steel-girder floor-beam type, included in the first five for strengthening, is replaced by the concrete tee type for structural work.

Another, more general approach, which accounts for almost all of the bridges in the NBI, examines the structural adequacy and safety factor (S1) given in Ref. *100*, remaining life, and anticipated retirement, all of which can be obtained directly or by simple computations from the bridge records. The structural adequacy and safety factor is part of the FHWA Sufficiency Rating and is computed from the substructure and superstructure condition ratings and the inventory rating (adjusted inventory tonnage). If the characteristics of bridges for which inspectors recommended strengthening are compared with the characteristics of average bridges, low structural adequacy and safety often correlate well with a need for strengthening.

The average S1 value was computed for the 15 common bridge types, and the ten bridge types having the lowest S1 values are ranked in Figure 5. The first five rankings are very similar to those in Figures 3 and 4 and are identical to those for Item 67, structural condition, which was checked separately but not graphed. The only new type in the first five is the concrete-deck arch type.

Remaining life can also give some evidence of need for strengthening. Those bridge types for which inspectors estimated a relatively low remaining life are often candidates for strengthening. The average remaining lives are ranked for ten bridge types in Figure 6. No bridge types different from those identified in previous figures appear in the first five rankings.

Either specific inspector recommendations or more general measures of the potential needs for strengthening point to the same bridge types. In order to develop some concept of the urgency of the strengthening needs, the number of anticipated bridge retirements was examined for all of the 15 common bridge types.

In Figures 7 through 14 the numbers of bridges constructed in each 5-year period are plotted for the bridge types for which there are large percentages of anticipated retirement in the near

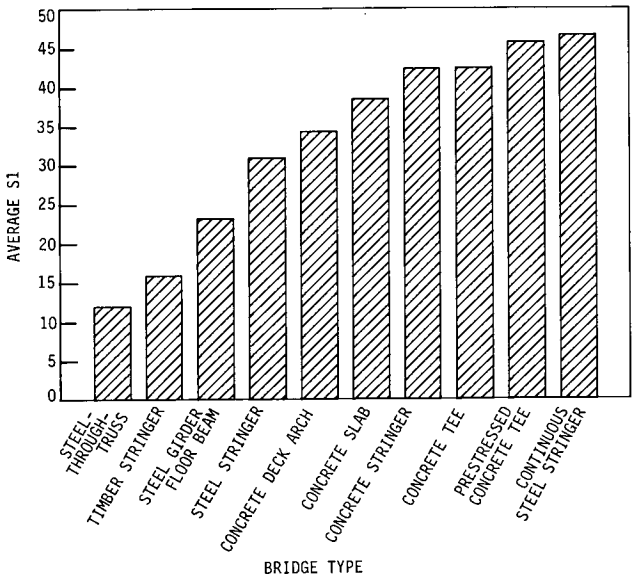

Figure 5. Average structural adequacy and safety (S1), ranked by bridge type (NBI).

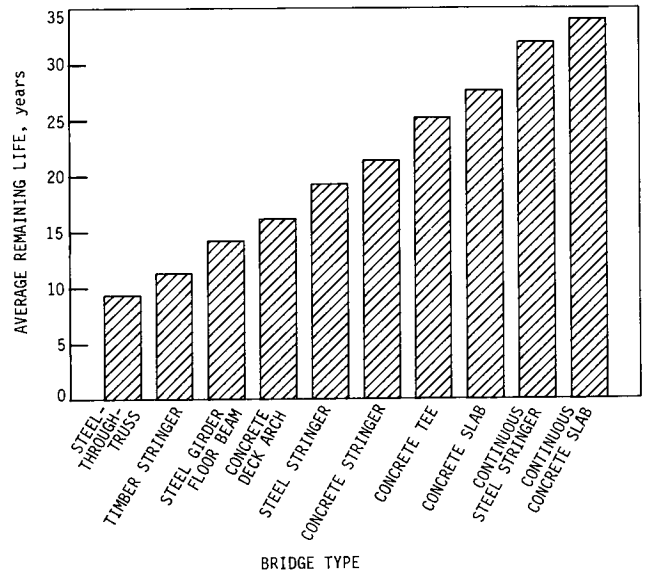

Figure 6. Average remaining life, ranked by bridge type (NBI).

future. The first point in each figure is for the number of bridges constructed in 1900 or in previous years, and the other points connected by the dotted line are for numbers constructed during periods such as 1901–1905.

The average life was computed from NBI data for each bridge type by adding the age computed from year built and the estimated remaining life. A solid line was plotted in each figure using the numbers of bridges for the construction points but extended into the future by the average life. Although the average life has some inaccuracy because it is based on surviving bridges and remaining life estimates, it is the best available statistic for predicting bridge life. The solid line in each figure, then, represents anticipated bridge retirements. For those bridge types having large numbers of anticipated retirement in the near future, a definite need for effective strengthening methods exists.

Those bridge types showing large numbers of anticipated retirements in the near future, ranked in order by maximum number in any 5-year period, are steel stringer, timber stringer, steel through-truss, concrete slab, concrete tee, concrete stringer, steel-girder floor-beam, and concrete-deck arch. The graphs for those bridge types are Figures 7 through 14, and all show a similar urgency. As of 1985, the number of anticipated retirements is either small with a large projected increase in the near future, or as in Figure 9, the number of anticipated retirements is at a high level that will continue in the near future.

The bridge records in the NBI are quite consistent in identifying steel stringer, timber stringer, and steel through-truss bridge types as the primary types for which strengthening is required. Secondary needs involve concrete slab, concrete tee, concrete stringer, steel-girder floor-beam, and concrete-deck arch bridge types.

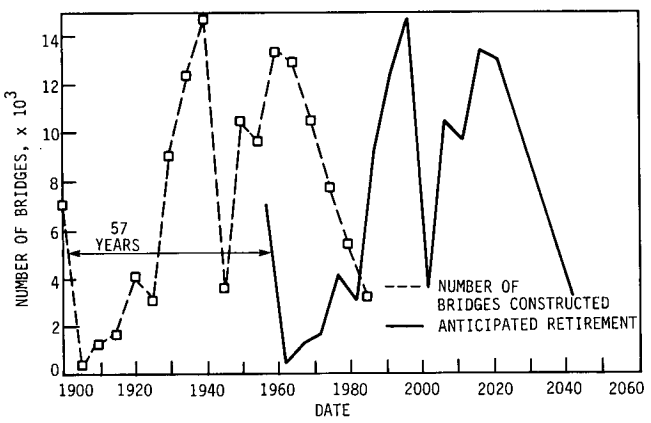

Figure 7. Numbers of steel-stringer bridges constructed and anticipated retirements by 5-year periods (NBI).

2.1.3 Questionnaire

The questionnaire described in Section 1.4.1.2 was sent to FHWA offices, state departments of transportation, selected county engineers, selected bridge design consultants, and others whom the research team considered to have expertise and experience in bridge strengthening. The questionnaire contained a variety of questions relating to the performance and economics of bridge strengthening. The responses of interest here are those to the question "For what types of bridges do you see a need for the development of a design procedure for strengthening?"

The responses are organized and plotted in Figure 15. Because the response format was open, not tied to the NBI, bridge types were not as accurately specified as in the NBI. The relatively general responses, which give little insight as to bridge type, are

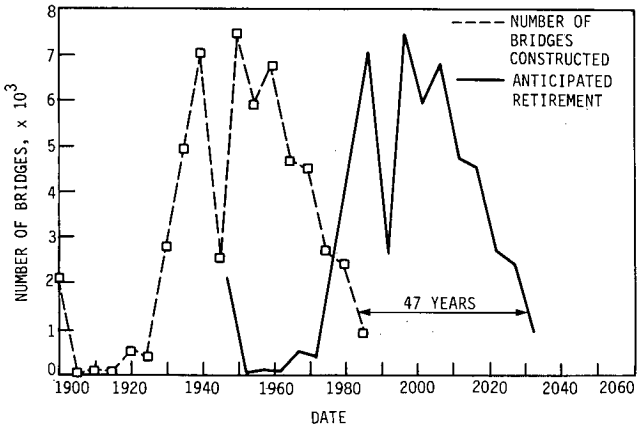

Figure 8. Numbers of timber stringer bridges constructed and anticipated retirements by 5-year periods (NBI).

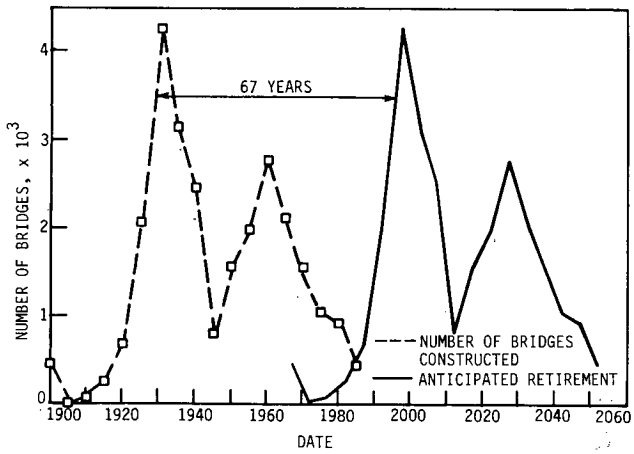

Figure 11. Numbers of concrete tee bridges constructed and anticipated retirements by 5-year periods (NBI).

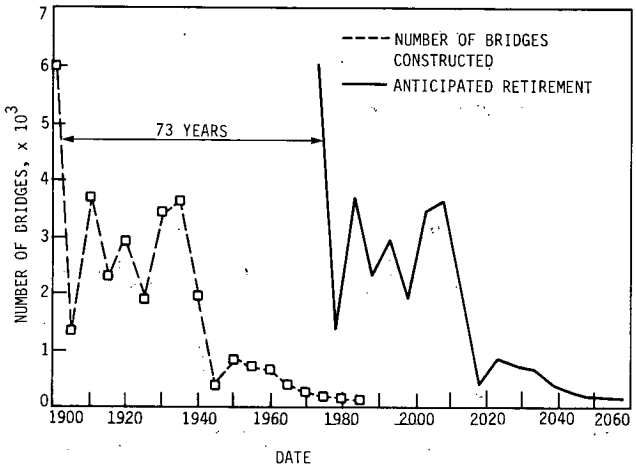

Figure 9. Numbers of steel-through-truss bridges constructed and anticipated retirements by 5-year periods (NBI).

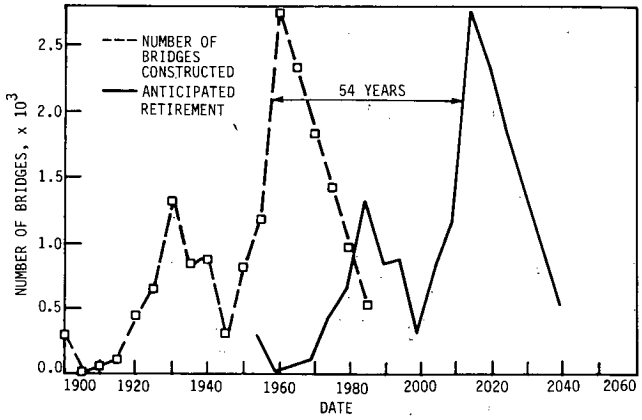

Figure 12. Numbers of concrete-stringer bridges constructed and anticipated retirements by 5-year periods (NBI).

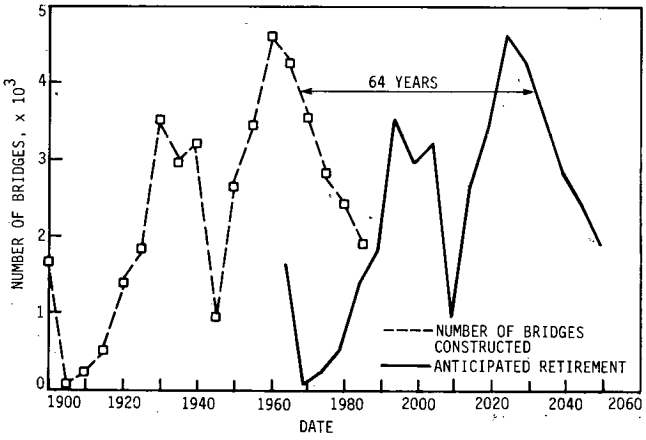

Figure 10. Numbers of concrete slab bridges constructed and anticipated retirements by 5-year periods (NBI).

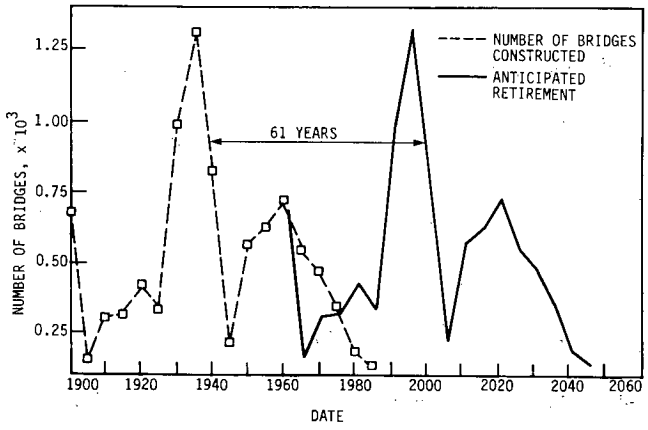

Figure 13. Numbers of steel-girder/floor-beam bridges constructed and anticipated retirements by 5-year periods (NBI).

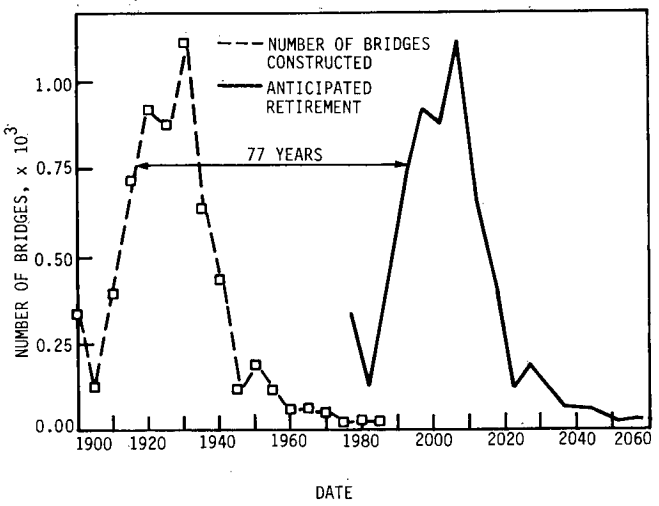

Figure 14. Numbers of concrete deck arch bridges constructed and anticipated retirements by 5-year periods (NBI).

omitted from the categories in the figure. Figure 15 gives results similar to those from the NBI. Obviously many bridge engineers and management personnel see the need for strengthening methods for steel truss bridges and for steel stringer or steel-girder floor-beam bridges. Questionnaire respondents generally see less need for strengthening methods for timber and concrete bridges. Concrete slab and tee bridge types were mentioned, but other timber and concrete responses related only to material and not to specific designs or constructions.

2.1.4 Site Inspections

The Iowa DOT regularly prepares the "Iowa Bridge Embargo Map" for load-restricted bridges on all federal and Iowa highways. The map was used as a guide for site inspections of more than 40 bridges. About half of the 40 bridges were either load-restricted by the Iowa DOT or load-restricted by county or local authorities.

Of the load-restricted bridges (which would have a low S1 rating under the NBI), approximately one-third were in very poor condition and required replacement. An example of those bridges in poor condition is illustrated in Figure 16. As shown in Figure 16 (top photo), the bridge is restricted to one lane by pavement markings. Flashers, paddle boards, and speed restriction signs not readily apparent in the photograph also enforce the one-lane restriction. The concrete tee bridge is in extremely poor condition as illustrated in Figure 16 (bottom photo). At the support, a considerable amount of concrete has been eroded, and stirrups and longitudinal steel are exposed and heavily rusted. The bridge obviously needs replacement.

Another one-third of the load-restricted bridges were in average condition and could possibly be strengthened along with rehabilitation if functional and economic considerations were favorable. The remaining one-third, in good condition and well maintained, were good candidates for strengthening without significant rehabilitation if functional and economic consideration were favorable. An example of those bridges that could be strengthened without significant rehabilitation is given in Figure 17. Although posted, the bridge is accessible to two lanes of traffic as shown in Figure 17 (top photo). The deck, continuous steel stringers, diaphragms, and piers are in very good condition as indicated in Figure 17 (bottom photo).

Most of the load-restricted bridges in average to good condition were steel stringer, continuous steel stringer, steel through-truss, or steel pony-truss bridges. Even though the site inspections were quire random, they tend to support conclusions that can be drawn from the NBI records and the strengthening questionnaire.

2.1.5 Summary

Direct and indirect examination of NBI bridge records indicates that the bridge types with greatest potential for strengthening are steel stringer, timber stringer, and steel through-truss. If rehabilitation and strengthening cannot be used to extend their useful lives, many of these bridges will require replacement in the near future. Other bridge types for which there also is potential for strengthening are concrete slab, concrete tee, concrete stringer, steel-girder floor-beam, and concrete-deck arch.

Questionnaire responses from bridge engineers and bridge specialists strongly support the need for development of strengthening methods for steel truss and steel stringer or steel-girder floor-beam bridges. There is less interest in strengthening methods for timber bridges, quite possibly because timber is not perceived as a permanent material. Questionnaire responses also support the need for strengthening of the concrete bridge types identified through the NBI, but the responses are not confined to the specific NBI classifications for bridge type.

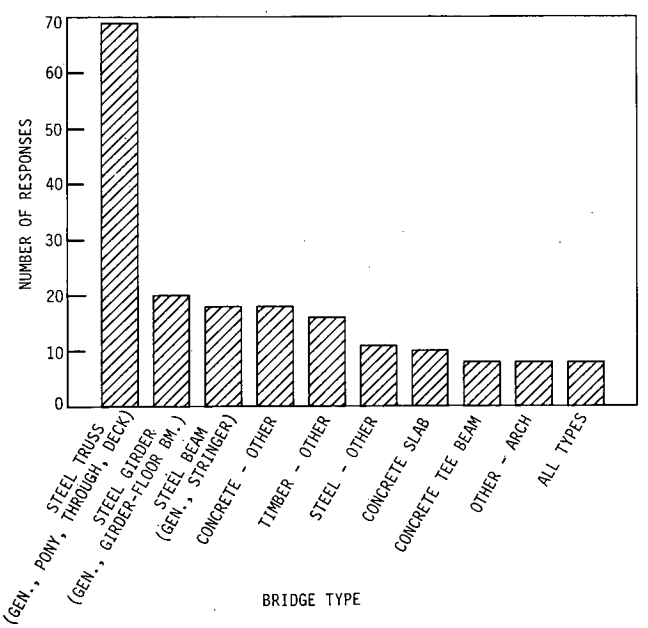

Figure 15. Questionaire responses for strengthening needs ranked by bridge type.

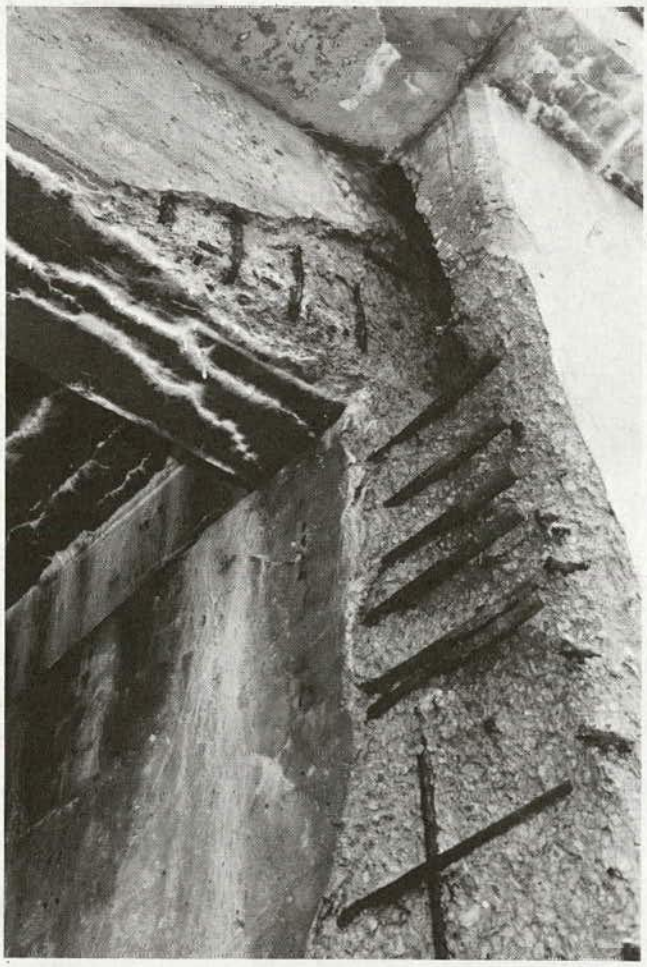

Figure 16. Load-restricted concrete tee bridge. Top photo shows pavement markings for one-lane restriction; bottom photo shows exterior beam at abutment.

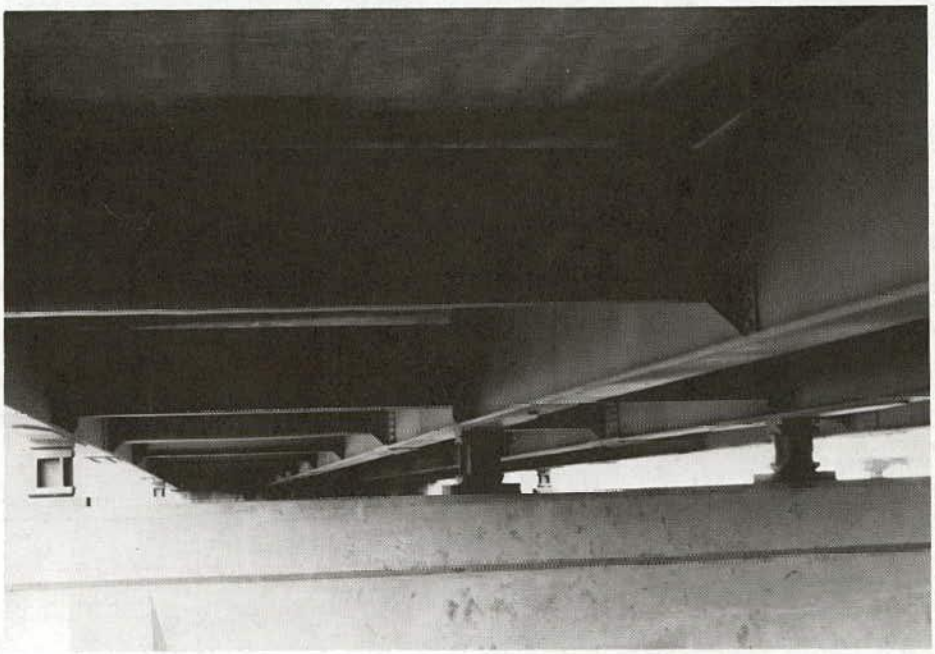

Figure 17. Load-restricted continuous steel-stringer bridge. Top photo shows roadway; bottom photo shows deck, stringers, diaphragms, and pier.

Inspection of Iowa's load-restricted bridges, even though these inspections were for a very small number of the nation's bridges, tends to support previous conclusions for bridge types in need of strengthening. Although some of the load-restricted bridges will have to be replaced, others could be strengthened to extend their useful lives with only minimal additional rehabilitation.

2.2 SURVEY RESULTS

A total of 767 questionnaires (See Exhibits A-1 and A-2 in Appendix A) were mailed to six different survey groups. The group designation and description of each of the survey groups follows. The first five groups received Questionnaire 1, and the last group received Questionnaire 2.

1. *Federal.* Federal Highway Administration bridge engineers from state and regional offices and engineers at the regional offices of the United States Forest Service, a division of the United States Department of Agriculture, are included in this survey group.

2. *State Bridge.* Questionnaires were mailed to the bridge engineers from the 50 states, the District of Columbia, the Port Authority of New York and New Jersey, Puerto Rico, Guam, and six Canadian Provinces.

3. *State Maintenance.* Questionnaires were mailed to at least one maintenance engineer from each state, the District of Columbia, Puerto Rico, Guam, and five Canadian Provinces.

4. *County.* Approximately 36 percent of the 1,079 members of the National Association of County Engineers (NACE) were surveyed. A list of 122 county engineers with interests in bridge construction, design, and maintenance was obtained from NACE. All of these engineers were surveyed in addition to engineers from other states not otherwise represented. In an attempt to target county engineers who may have been involved with bridge strengthening, county engineers working in states with known interests in bridge rehabilitation and strengthening received a higher percentage of questionnaires than those working in other states.

5. *Referral.* Consultants, researchers, and members of two technical committees of the American Railway Engineering Association (AREA) form this survey group. Many of these individuals were suggested as persons to contact by questionnaire respondents.

6. *Manufacturer.* Questionnaire 2 was sent to manufacturers of products related to bridge strengthening, such as epoxy manufacturers, lightweight deck manufacturers, and post-tensioning manufacturers.

The number of questionnaires mailed to each group and their response rate are given in Table 3. In some cases, one questionnaire was returned in response to more than one questionnaire mailed out. For example, the state bridge engineer and the state maintenance engineer often responded with one questionnaire even though they had received two. For determining the response rate for each survey group and the overall response rate, the one questionnaire was counted as two responses. A total of 291 responses were recorded, while only 258 questionnaires were returned. For tabulating the responses to the individual questions, however, one questionnaire counted as one response.

The State Bridge survey group had an 89 percent response rate, the highest of all the groups surveyed. All but three of the 50 state bridge engineers returned the questionnaire. The high rate of response for this survey group can partially be attributed to their interest in and experience with bridge strengthening. State bridge engineers were also singled out to receive reminders in an effort to improve their response level.

The federal, state, and county survey groups were used in tabulating the responses to the individual questions on the questionnaire. These groups are the same as those described above with the exception that the state survey group included both the state bridge and the state maintenance survey groups.

Figures 18, 19, and 20 itemize the responses to questions Q-1a and Q-1b, Q-2, and Q-3 on Questionnaire 1. The response to Q-4 is discussed in Section 2.1.3. The responses from the referral and manufacturer survey groups were not included in tabulations of the results for questions Q-1 through Q-3 because

Table 3. Distribution and response to questionnaires.

Survey Group	Number Distributed	Number Returned	Response Rate %
Federal	65	41	63
State Bridge	63	56	89
State Maintenance	94	29	31
County	389	127	33
Referral	115	29	25
Manufacturer	41	9	22
Total	767	291	38 (average)

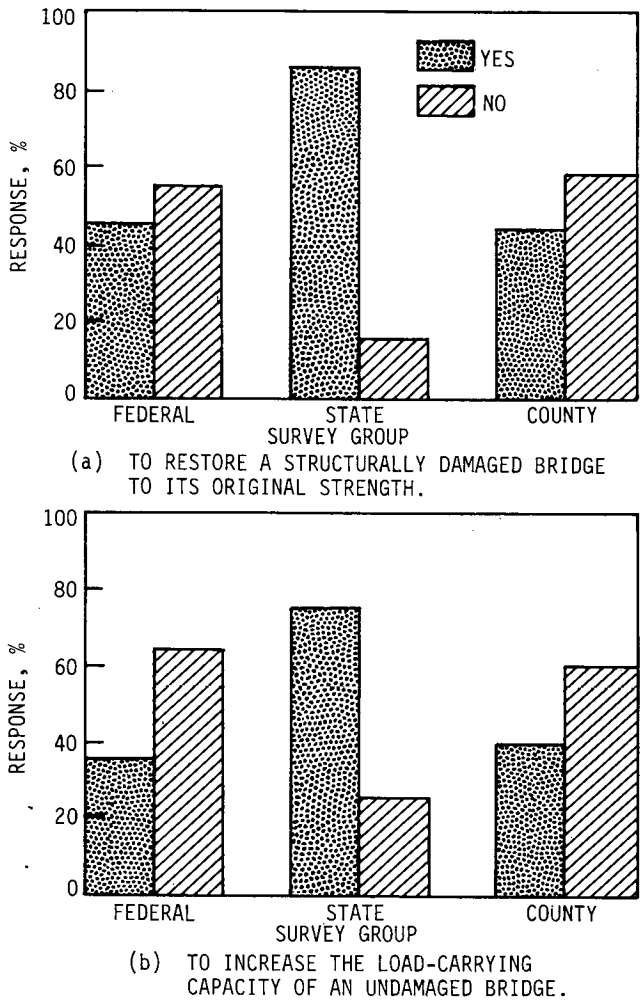

Figure 18. Response to Q-1—Have you used any strengthening techniques?

of the nature of the two groups and their relatively low-response rates. The response rates shown in all figures are based on the number of respondents answering the particular question; federal, state, and county respondents who returned the questionnaire but did not answer the given question were not included.

A notable result that can be seen from Figure 18 is the high rate of involvement in strengthening by bridge and maintenance engineers at the state level. The rate of involvement by bridge engineers at the federal level is lower; however, this can be partially attributed to the fact that many federal bridge engineers indicated that they were not directly responsible for any bridges. Despite efforts to target county engineers who might be involved with bridge strengthening, the majority of the responding county engineers indicated that they had no experience with bridge strengthening.

Figure 19 indicates the response to question Q-2: At what maximum percentage of replacement cost would you choose strengthening over replacement? The most frequent response of all three survey groups fell into the 45 percent to 54 percent range; however, a weighted average of the responses for the three groups indicates a slightly lower percentage of replacement cost, in the 35 percent to 44 percent range. Many respondents commented that this value varies depending on the condition, geometry, and estimated remaining life of the existing bridge as well as on the traffic volume, the availability of alternate routes, and the time required for construction.

A tabulation of the responses to question Q-3 is shown in Figure 20. A relatively low percentage of respondents from all three survey groups indicated that they had either developed or implemented new techniques for strengthening existing bridges. Space was provided for a description of the new techniques with which the respondent had experience. Strengthening techniques described included post-tensioning stringers, truss tension members, and pier caps; injecting epoxy and inserting rebars; epoxy-bonding steel attachments to structural steel members; converting simple spans to continuous spans; replacing deteriorated timber piling; superimposing a steel arch on a steel truss bridge; and pseudo-strengthening by using more exact techniques to analyze the capacity of the existing bridge.

The second half of the questionnaire was an open format in which respondents who had used strengthening techniques to strengthen a damaged bridge or to increase the load-carrying capacity of an undamaged bridge described the method(s) used. The following list of strengthening methods was provided on the questionnaire for reference:

1. Replace existing deck with a lighter weight deck.
2. Provide composite action between deck and supporting members.
3. Increase transverse stiffness of bridge deck.
4. Replace deficient members.
5. Replace structurally significant portions of deficient members.
6. Increase cross section of deficient members.
7. Add supplemental members.
8. Post-stress members.
9. Add supplemental spanning mechanisms.
10. Strengthen critical connections.
11. Add supplemental supports to reduce span length.
12. Convert a series of simple spans to a continuous span.
13. Other.

These strengthening methods will be referred to by number in tabulations of the data.

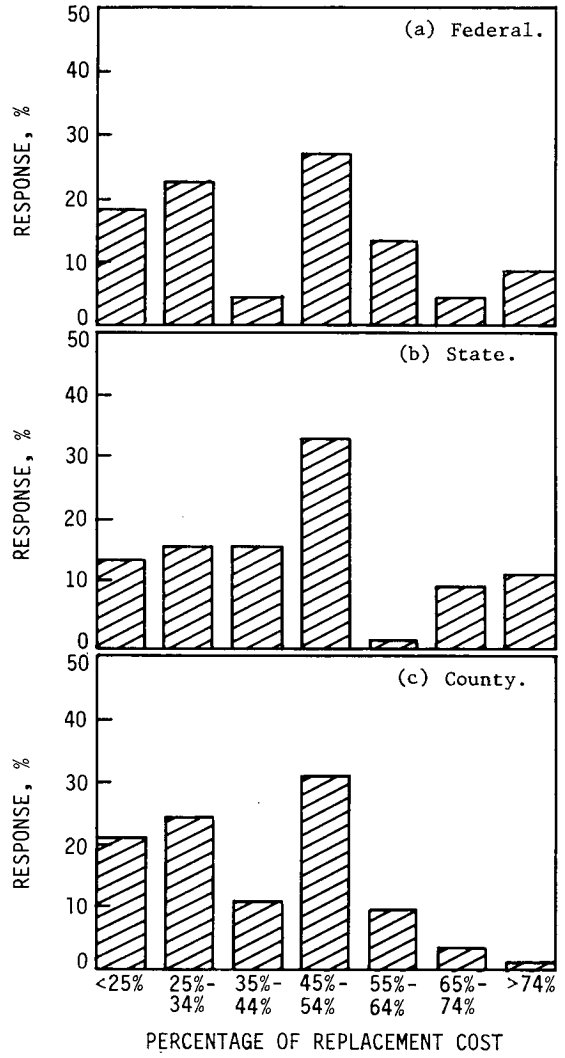

Figure 19. Response to Q-2—At what maximum percent of replacement cost would you choose strengthening over replacement?

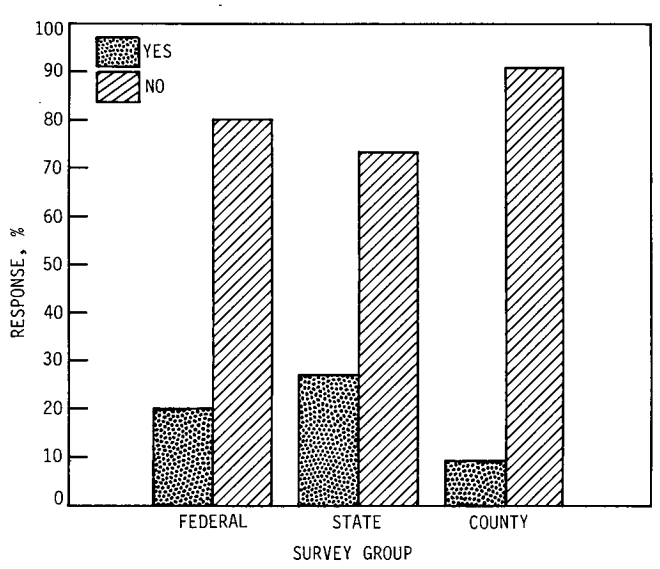

Figure 20. Response to Q-3—Have you developed or implemented any techniques for strengthening existing bridges?

A total of 522 strengthened bridges were described by the respondents. Some respondents enclosed plans, pictures, and product literature with their completed questionnaires. The information provided was useful and, in some cases, will be referenced in later sections. The number of responses received for each of the foregoing strengthening methods, both when used alone and when used in conjunction with other strengthening techniques, is shown in Figure 21. The survey results indicate that replacing deficient members and increasing the cross section of deficient members have been the two most frequently used strengthening techniques. Lightweight deck replacement, providing composite action, and adding supplemental members were also commonly used by the respondents. Infrequently mentioned strengthening techniques include: adding supplemental spanning mechanisms, converting a series of simple spans to a continuous span, and increasing the transverse stiffness of the bridge deck.

The respondents were asked to rate the structural and cost effectiveness of each bridge strengthening project described. The following four categories were suggested: (1) very effective, (2) moderately effective, (3) not very effective, and (4) not effective at all. The structural and cost-effectiveness ratings for strengthening methods 1 through 12, when used alone, are shown in Figure 22. In general, the majority of the respondents rated the strengthening methods either very effective or moderately effective. Figure 23 shows the overall effectiveness rating for all the strengthening methods, when used alone or in combination.

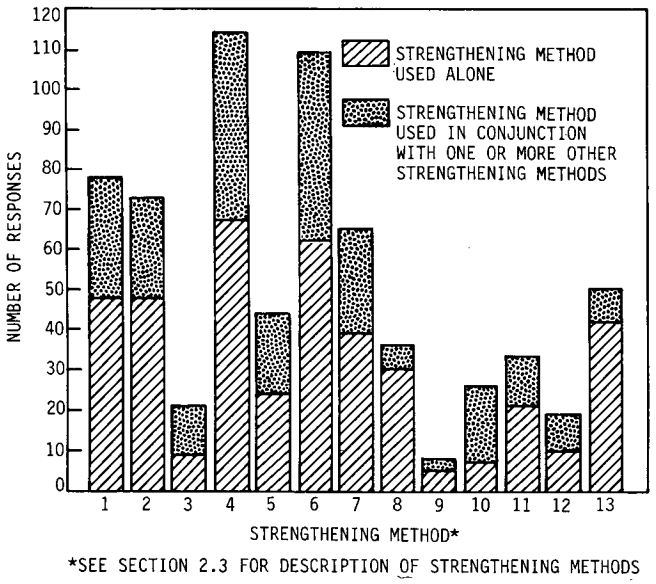

Figure 21. Number of responses for strengthening methods 1 through 13.

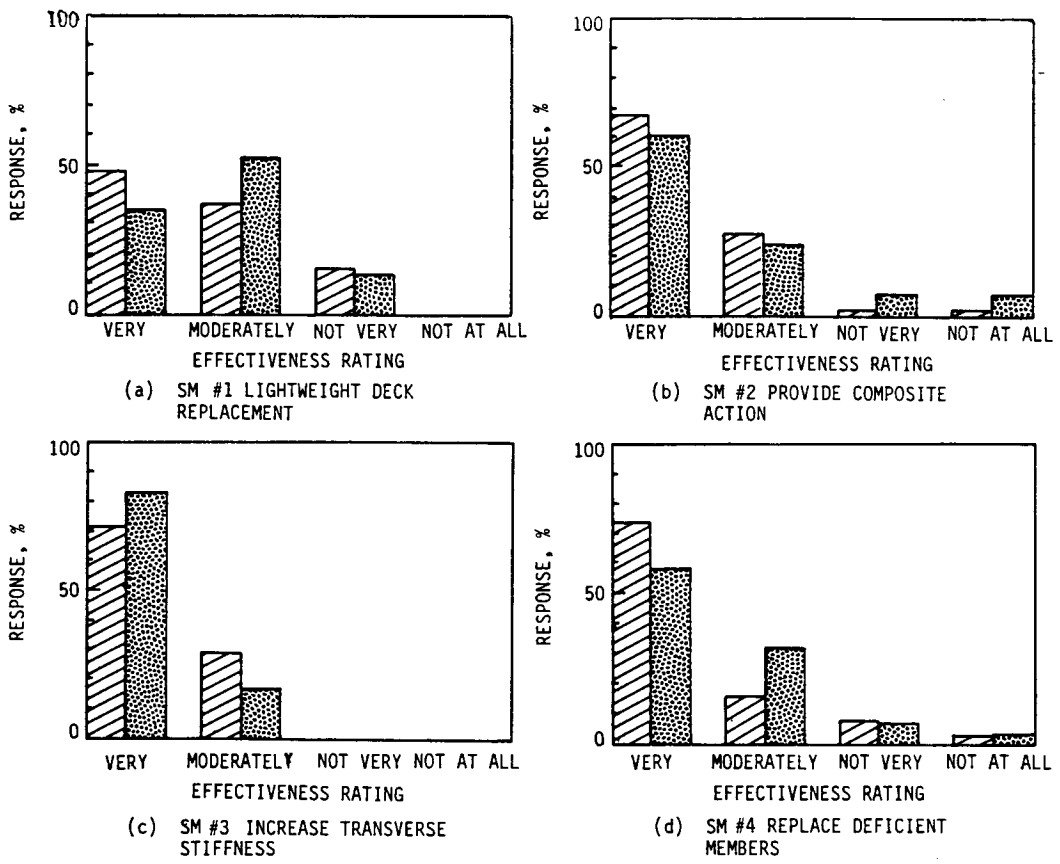

Figure 22. Structural and cost-effectiveness ratings for strengthening methods 1 through 12.

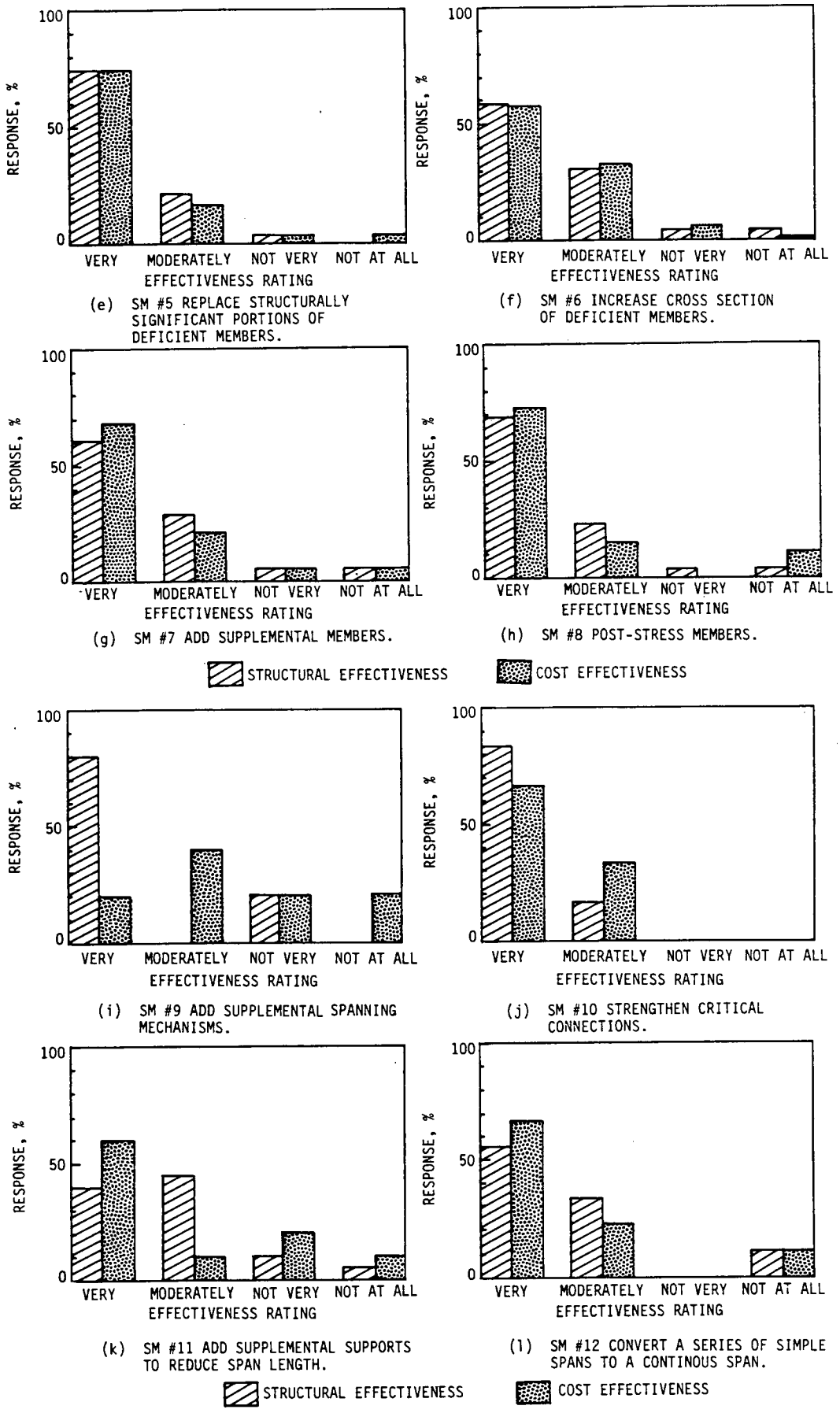

Figure 22. Continued

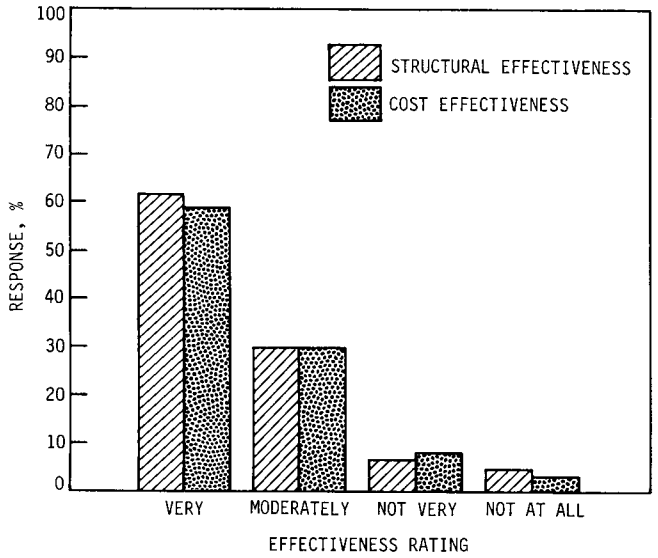

Figure 23. Structural and cost-effectiveness ratings for all strengthening methods when used alone or in combination.

A total of 91 percent of the respondents rated the structural effectiveness of the strengthening methods used as either very effective or moderately effective. Similarly, 88 percent of the respondents rated the cost effectiveness as either very effective or moderately effective.

2.3 LITERATURE REVIEW

The literature review which follows has been organized by strengthening procedure in the same order as in Chapter Three for easy cross-reference. Thus, the eight sections of Chapter Two (Secs. 2.3.1 to 2.3.8) correspond to the eight sections of Chapter Three (Secs. 3.3 to 3.10).

When the literature review of the various strengthening methods is studied, strengthening by post-tensioning (Sec. 2.3.6) accounts for approximately one-third of the literature review. A majority of the articles reviewed in that section are foreign references. The length of the post-tensioning section should not be misconstrued as a bias of the research team or an indication of the overall popularity of the method, but simply a reporting of the work that has been done in that area. The brevity of some of the other sections, such as Section 2.3.4 (Improving the Strength of Various Bridge Members), is simply the result of very little literature being available in that area. Survey results (see Sec. 2.2) indicate that increasing the cross section of deficient members was the second most popular strengthening technique used in this country. However, when one studies the literature review on this strengthening technique (Sec. 2.3.4), only limited information is found. One possible explanation for this finding and possibly for the lack of literature in other areas as well is that engineers believe this to be a common strengthening technique and thus have not documented it in the literature.

2.3.1 Lightweight Deck

The live-load capacity of a bridge can be improved by replacing an existing heavyweight deck with a new lightweight deck. A review of the literature reveals that several structurally adequate, lightweight decks are available, including: steel grid, exodermic, timber, light-weight concrete, aluminum orthotropic plate, and steel orthotropic plate. The literature review has been categorized and presented according to these deck types.

2.3.1.1 Steel Grid Deck

Steel grid deck has been widely used to increase the live-load carrying capacity of bridges. The West Virginia Department of Highways was one of the first states to develop a statewide bridge rehabilitation plan using open grid steel deck (*238, 303*). By 1974, 25 bridges had been renovated to meet or exceed AASHTO requirements. Deteriorated concrete decks were replaced with lightweight, honeycombed steel grid decks fabricated from ASTM A588 steel. The new bridge floors are expected to have a 50-year life and require minimal maintenance.

Numerous other examples of steel grid deck replacement have been documented. In 1975, the Port Authority in Massachusetts replaced 313,000 sq ft of deck on the lower level of the Tobin Memorial Bridge, a 25-year-old, six-lane, double-deck bridge near Boston (*238*). The deteriorated reinforced concrete deck was replaced with a steel grid deck partially filled with concrete. After installation, the panels were half-filled with concrete, sealed with epoxy, and then paved with 1½ in. of asbestos-modified asphalt. Traffic patterns in the area necessitated that the bridge remain open to traffic during rehabilitation.

The 132,890-sq ft bridge deck of the McClugage Bridge in Peoria, Illinois, was also replaced in the mid-1970s with an ASTM A588 steel grid deck, half-filled with concrete (*47*). The contractor chose to fill the grids with 2½ in. of concrete at the job site prior to installing the panels on the bridge. The grids located over supporting members were initially left open to allow field welding of the panels. The redecking of the McClugage Bridge was completed at night, and thus traffic could use the bridge during the daytime hours.

In 1981, the West Virginia Department of Highways increased the live-load limit on a 1,794-ft-long bridge over the Ohio River from 3 tons to 13 tons by replacing the existing reinforced concrete deck with an open steel grid deck (*186, 59*). The existing deck was removed and the new deck installed in sections allowing half of the bridge to be left open for use by workers, construction vehicles and equipment, and, if needed, emergency vehicles.

The strengthening of the 250-ft-long Old York Road Bridge in New Jersey in the early 1980s combined deck replacement with the replacement of all of the main framing members and the modernization of the piers and abutments (*259*). The existing deck was replaced with an ASTM A588 open grid steel deck. The posted 10-ton load limit was increased to 36 tons and the bridge was widened from 18 ft to 26 ft.

2.3.1.2 Exodermic Deck

The first installation of Exodermic deck was in 1984 on the 4,400-ft-long Driscoll Bridge located in New Jersey (*85*). The

deck, weighing 53 lb/sq ft, consisted of a 3-in. upper layer of prefabricated reinforced concrete joined to a lower layer of steel grating. Approximately 30,000 sq ft of deck was replaced at this site. It was estimated that by using Exodermic precast deck modules, more than $1 million was saved on the $5.1 million rehabilitation project.

Exodermic deck has also been specified for the deck replacement on a four-span bridge which overpasses the New York State Thruway (*54*). The bridge will be closed to traffic during deck removal and replacement. Once the existing deck has been removed, it is estimated that approximately 7,500 sq ft of Exodermic deck will be installed in three working days.

2.3.1.3 Lightweight Concrete Deck

Lightweight concrete was used as early as 1922 for new bridge construction in the United States. Over the years, concrete made with good lightweight aggregate has generally performed satisfactorily; however, some problems related to the durability of the concrete have been experienced. The Louisiana Department of Transportation has experienced several deck failures on bridges built with lightweight concrete in the late 1950s and early 1960s. The deck failures have typically occurred on bridges with high traffic counts and have been characterized by sudden and unexpected collapse of sections of the deck.

Lightweight concrete decks can either be cast in place or factory precast. Examples of the use of lightweight concrete for deck replacement follow.

2.3.1.3.1 Cast-in-place concrete. New York state authorities used lightweight concrete to replace the deck on the north span of the Newburgh-Beacon Bridge (*134, 342*). The existing deck was replaced with 6½ in. of cast-in-place lightweight concrete that was surfaced with a 1½ in. layer of latex modified concrete. Use of the lightweight concrete allowed the bridge to be widened from two to three lanes with minimal modifications to the substructure. A significant reduction in the cost of widening the northbound bridge was attributed to the reduction in dead load. The south span of the Newburgh-Beacon Bridge was widened to three lanes in 1980 at a cost of $90 million. The cost of widening the north span in 1984 with lightweight concrete was $43.5 million.

2.3.1.3.2 Precast concrete panels. Precast modular-deck construction has been used successfully since 1967 when a joint study, conducted by Purdue University and Indiana State Highway Commission, found precast, prestressed deck elements to be economically and structurally feasible for bridge deck replacement (*104, 168*).

Precast panels, made of lightweight concrete (115 pcf), were used to replace and widen the existing concrete deck on the Woodrow Wilson Bridge, located on Interstate 95 south of Washington, D.C. (*115, 232*). The precast panels were transversely prestressed and longitudinally post-tensioned. Special sliding steel-bearing plates were used between the panels and the structural steel to prevent the introduction of unwanted stresses in the superstructure. The Maryland State Highway Commission required that all six lanes of traffic be maintained during the peak traffic hours of the morning and evening. Two-way traffic was maintained at night when the removal and replacement of the deck was accomplished.

2.3.1.4 Aluminum Orthotropic Plate Deck

The 104-year-old Smithfield Street Bridge in Pittsburgh, Pennsylvania, has undergone two lightweight deck replacements, both involving aluminum deck (*306*). The first deck replacement occurred in 1933 when the original heavyweight deck was replaced with an aluminum deck and floor framing system. The aluminum deck was coated with a 1½-in. asphaltic cement wearing surface. The new deck, weighing 30 lb/sq ft, eliminated 751 tons of deadweight and increased the live-load capacity from 5 tons to 20 tons.

Excessive corrosion of some of the deck panels and framing members necessitated the replacement of the aluminum deck on the Smithfield Street Bridge in 1967. At that time, a new aluminum orthotropic plate deck with a ⅜-in. thick polymer concrete-wearing surface was installed. This new deck weighed 15 lb/sq ft and resulted in an additional 108-ton reduction in dead weight. The panels were originally attached to the structure with anodized aluminum bolts, but the bolts were later replaced with galvanized steel bolts after loosening and fracturing of the aluminum bolts became a problem. The aluminum components of the deck have shown no significant corrosion; however, because of excessive wear, the wearing surface had to be replaced in the mid-1970s. The new wearing surface consisted of aluminum-expanded mesh filled with epoxy resin concrete. This wearing surface has also experienced excessive wear, and thus early replacement is anticipated.

2.3.1.5 Steel Orthotropic Plate Deck

Steel orthotropic plate decks were first conceived in the 1930s for movable bridges and were termed battledecks (*127*). Steel orthotropic decks were rapidly developed in the late 1940s in West Germany for replacement of bridges destroyed in World War II during a time when steel was in short supply, and replacement of bridge decks with steel orthotropic plate decks became a means for increasing the live-load capacity of medium- to long-span bridges in West Germany in the 1950s.

In 1956 Woeltinger and Bock (*372*) reported the rebuilding of a wrought iron, 536-ft-span bridge near Kiel. The two-hinged, deck arch bridge, which carried both rail and highway traffic, was widened and strengthened through rebuilding essentially all of the bridge except the arches and abutments. The replacement steel orthotropic deck removed approximately 190 tons of dead load from the bridge, improved the deck live-load capacity, and was constructed in such a way as to replace the original lateral wind bracing truss.

Another trussed arch bridge in Kiel was rebuilt at nearly the same time (*283*). Because the Gablenz Bridge was of the through-arch type, one of the arches was moved before installation of the replacement steel orthotropic deck, in order to widen the bridge. When compared on an area basis, the replacement steel orthotropic deck saved 23 percent of the weight of the original reinforced concrete deck.

One of the bridges across the Rhine River at Cologne, the Cologne-Muelheim Bridge, which was the first large bridge to make use of steel orthotropic plate deck, was altered and improved with steel orthotropic decks in the mid-1970s (*97*). For the main suspension spans, which already had steel orthotropic decks for the traffic lanes and rail lines, the precast concrete pedestrian walkways were replaced with steel orthotropic decks.

The steel plate girder approach spans to the west of the suspension spans had reinforced concrete, composite decks that had deteriorated. The deteriorated concrete decks were inadequate, especially for rail traffic and thus were replaced with lighter weight steel orthotropic decks.

The live-load class of a bridge near Darmstadt was raised by means of a replacement steel orthotropic deck also in the mid-1970s (*109*). The three-span, steel-through-truss bridge had been repaired and altered twice since World War II, but the deck had finally deteriorated to the point where it required replacement. The existing reinforced concrete deck was then replaced with a steel orthotropic plate deck, and the reduction in weight permitted the bridge to be reclassified for higher truck loads.

2.3.2 Composite Action

Composite action was used to increase the moment of inertia of bridge stringers as early as the 1920s but did not become popular until the 1950s. At this time numerous research projects were initiated to increase knowledge about composite action. Most of the projects concentrated on various types of shear connectors because of the importance of this element in creating composite action. A very brief review of research on composite beams and the various types of shear connectors used is presented in the following paragraphs.

In 1952, Siess, Newmark and Viest (*294*) found that a channel with one flange welded to the beam appeared to be superior to other types of shear connectors fabricated from bent or straight plates. The major variables affecting the behavior of the channels were found to be the length of the channel section, the thickness of the channel web, and the compressive strength of the concrete. Viest (*353*) has published an excellent review of early research on composite steel-concrete beams.

Studies on welded stud shear connectors began in 1954 at the University of Illinois and Lehigh University. In one of the early studies Viest (*352*) found that the behavior of a stud shear connector was similar to that of a flexible shear connector. Since that time there have been numerous investigations on the welded studs. One of particular interest was by Slutter and Driscoll (*297*). They determined that there is a definite relationship between the ultimate strength of shear connectors and the ultimate flexural capacity of the beam. They also determined that the theoretical ultimate bending moment can be attained if the sum of the ultimate strengths of all shear connectors in the shear span is sufficient to satisfy the equilibrium condition at ultimate load.

Several research reports have noted the addition of composite action to an existing bridge as one way of increasing its strength. Berger (*32*) noted that this procedure could be used when a deteriorated concrete deck is removed and replaced with a new deck or when the existing deck is sound simply by drilling holes through the deck, adding shear connectors, and grouting the holes.

In 1979, Kahn et al. (*149*) investigated the idea of creating composite action in an existing noncomposite highway bridge by injecting epoxy between the steel stringers and the concrete deck. Because one of the most important variables was the space between the steel and concrete, three different spaces were investigated. On the basis of this study, the epoxy-injection technique shows only marginal promise. In push-off tests the natural bond between the concrete and the flange was greater than that achieved by the epoxy-injection process.

2.3.3 Increasing Transverse Stiffness of a Bridge

Much of the engineering literature on transverse stiffness of a bridge deals with the effects of diaphragms and cross frames on transverse stiffness rather than strengthening of a bridge by increasing transverse stiffness. The effectiveness of diaphragms and cross frames usually is measured by the change in live-load moment for either an exterior or an interior stringer. Various authors have stated changes in moment for stringers from 0 to 30 percent; thus, the amount of strengthening that can be achieved by increasing transverse stiffness is limited.

The effectiveness of intermediate diaphragms for short- and medium-span bridges has been investigated by numerous researchers (*57, 167, 290, 309, 361*); however, their findings often have been contradictory. In reviewing previous investigations, Cheung et al. (*61*) concluded that previous studies concentrated on the alleged effectiveness of a particular arrangement of diaphragms rather than on the actual increases or decreases in longitudinal moments due to diaphragms. The investigation of Cheung et al. included a theoretical analysis involving grillage analysis, finite-element analysis, and orthotropic plate theory for diaphragm type, stiffness, number, and location. The main conclusions were that sufficiently accurate load distribution data could be obtained with several simplifications of the analysis procedures employed, and that as long as the total diaphragm stiffness remains unchanged and there are at least two or more intermediate diaphragms, the actual number of diaphragms does not affect the global distribution of moments in a given bridge.

In a review of current practice in bridge design, the American Institute of Steel Construction (*8*) made several interesting observations about cross frames and diaphragms for bridges spanning 100 ft to 300 ft: (1) Reduction of live-load moment of 30 percent or more can often be achieved for interior stringers by properly accounting for the effects of conventional cross frames. The frames, however, cause no reduction in live-load moment for exterior stringers. (2) Diaphragms, because of their flexible connection to the longitudinal stringers, usually do not contribute substantially to transverse load distribution. However, if moment connections to the stringers are used, the effectiveness of the diaphragms could be improved.

The effect of cross bracing in curved bridges was investigated by Yoo and Littrell (*376*). Through the use of a finite-element model, they determined that after the addition of bracing at midspan, no significant changes in maximum bending stress or deck deflection occurred. However, warping stresses were sensitive to brace spacing, and thus brace spacing should be based on warping considerations.

A considerable amount of work has been performed in Canada in recent years in the area of transverse post-tensioning of timber bridge decks laminated from lumber placed longitudinally (*72, 73, 330*). The applied transverse prestressing increases load distribution in such decks and thus creates a very efficient load-sharing system. The post-tensioning procedure has been used in the field for rehabilitation projects as well as for new construction.

The literature on transverse stiffness of bridge decks indicates that addition of cross frames, diaphragms, or post-tensioning will strengthen a bridge in some situations, particularly when the bridge deck has a transverse stiffness problem. Increasing the transverse stiffness will be most effective for interior stringers and for laminated timber decks that are deteriorating. Increasing transverse stiffness will be least effective for exterior stringers.

2.3.4 Improving the Strength of Various Bridge Members

2.3.4.1 Addition of Steel Cover Plates

Steel cover plates can be used in a variety of situations. They can be used to increase the section modulus of steel, reinforced concrete, and timber beams. Steel cover plates are also an effective method of strengthening compression members in trusses by providing additional cross-sectional area and by reducing the slenderness ratio of the member.

Mancarti (*195*) reported the use of steel cover plates to strengthen floor beams on the Pit River Bridge and Overhead in California. The truss structure required strengthening of various other components to accommodate increased dead load. The cantilevered portion of the floor beams were strengthened at the top flange by adding tension straps alongside the original floor beam cover plates. Tie plates, placed on top of the original cover plate, and tension straps were then used to make the connection to the floor beam.

The stringers in this bridge were also in need of strengthening. This was performed by applying prestressing tendons near the top flange to reduce tensile stress in the negative moment region. This prestressing caused increased compressive stresses in the bottom flanges, which in turn required the addition of steel bars to the tops of the stringer bottom flange. The bars were connected with bolts.

The addition of cover plates to composite steel beams and subsequently prestressing the plate was investigated by Anand and Talesstchi (*9*). This technique takes advantage of an increase in the cross sectional moment of inertia as well as a mechanism for counteracting stresses caused by external loading. In this study, design equations were developed for simply supported, prestressed, composite steel beams in which the prestressing force is applied by welding a high-strength steel plate to the flange of an initially stressed rolled section. The initial stress in the beam, applied through jacking, is then released before casting the concrete slab. Although no cost comparisons were made between prestressed and nonprestressed composite beam designs, the authors anticipate that for jobs involving a large number of beams, the prestressing technique could lead to substantial savings.

A repair method outlined by Wickersheimer (*367*) for timber-roof, truss-compression members could be applicable to timber bridge-member strengthening. The method involves the addition of steel shapes onto the side of the member and the application of forces by tightening attached bolts to straighten the member. The bolts, placed perpendicular to the member axis, connect the steel shapes to the member. The authors note that the new steel assists the existing member in the load-carrying role as well as stiffening the member and increasing its radius of gyration.

A method for strengthening timber beams which uses steel bars in a truss-member configuration is mentioned in a report by Leliavsky (*181*). The method uses the existing timber beam and supplemental steel bar in a king post configuration. The steel bar is spliced with a turnbuckle.

In a report by Rodriguez et al. (*268*), a number of cases of coverplating existing members of old railway trusses were cited. These case studies included the inspection of 109 bridges and a determination of their safety. Safety determinations were based on AREA Specifications for existing bridges considering E72 loading. Some strengthening techniques included steel-coverplating beam members as well as truss members. Cover plates used to reinforce existing floor beams on a deficient through truss were designed to carry all live-load bending moment. Deficient truss members were strengthened with box sections made up of welded plates. The box was placed around the existing member and connected to it by welding.

Several bridges constructed of puddle iron and other metals that predated steel were strengthened between 1936 and 1953 (*243*). In all cases, reinforcing bars and members were attached to the existing structures by means of welding, after due consideration of the properties of the bridge material and materials to be used for the welds.

The earliest example of strengthening by welded plates and bars was the Brest Bridge, which was constructed in 1861 in France and which was strengthened during 1934 through 1936. Three rectangular bars were welded between rows of rivets along the top chords of the lattice girders (trusses), and additional plates and gussets were welded to the sides of the chords. A railway bridge supported by Howe trusses also was strengthened in 1936. Plates were welded between the existing double plates or double channels for diagonals and for top and bottom chords. The Douarnenez Bridge, a lattice girder bridge similar to the Brest Bridge, was strengthened by welding bars to top and bottom chords in 1953. This bridge is described in more detail below.

In 1932, a through-truss bridge over the Danube for a rail line between Budapest and Esztergom was strengthened for heavier locomotives (*165*). The bridge was constructed (1894–1896) of wrought iron as seven simple spans of 302-ft length. Although the trusses were adequate for the increased loads, the main stringers in the floor of the truss required strengthening. Addition of cover plates was not a feasible alternative because rail traffic had to be maintained. As a consequence, a different strengthening approach was taken. Hangers were attached at mid-height of the truss diagonals along with new bracing diagonals. At the base of each pair of hangers, a new transverse floor truss was attached with upper chord above the stringers and lower chord cut through the webs of the stringers. Stringers were then attached so that they functioned as two-span members rather than single-span members. The two-span condition relieved the need to strengthen the end connections for the stringers, which were overstressed and causing rivets to shear off.

Bachelart described the strengthening of two French bridges (*19*). The first bridge was a steel arch bridge over the Seine River constructed in 1906 with several spans of 459 ft. The arches were strengthened with two steel bars, each approximately 2.76 in. $\times$ 3.94 in. in cross section and welded between lines of rivets. Rail traffic was maintained during the strengthening, and the allowable load was increased by approximately 66 percent. The second bridge, at Rochefort on the Loire, was a lattice girder (truss) bridge with multiple spans of up to 174 ft. It was determined that the tension diagonals were adequate but that the compression diagonals in the truss required strengthening. The double angle compression diagonals were strengthened with single tees shop-welded to plates that were bolted to the existing diagonals.

The Douarnenez Bridge in France, which was constructed (1883–1885) of puddle iron, was strengthened in the early 1950s (*25*). The three-span bridge consisted of two lattice girders (trusses) placed below the roadway. Top and bottom chords of the truss were strengthened with bars welded between rows of

rivets. Because the puddle-iron bridge members could not sustain the temperatures required by regular welding, an anchorage layer of weld was applied first to which the final welds were attached. In addition to strengthening the chords, new diagonals were added to the lattice where required. Inverted tees also were welded to the undersides of all floor beams in order to strengthen those members. After strengthening was completed, the bridge was instrumented with strain gages and tested with various truck loads.

An article by Foster (*105*) from 1942 refers to strengthening techniques for old highway bridges. Only general references are made with regard to the strengthening concepts, but useful suggestions are made for cover plating existing beams as well as truss members.

2.3.4.2 Tension Members in a Truss

The strengthening of tension members in truss bridges has been performed a number of ways, depending on the member type. Strengthening of rolled or built-up sections connected at gusset plates are best suited to the addition of steel cover plates, whereas tension members of pin-connected trusses should be strengthened by the addition of adjustable bars or cables.

The strengthening of a two-span Pratt truss bridge was investigated by Zuk (*378*) in an analytical study. The components of the one-lane through bridge (total span length = 167.67 ft) were made up of rolled steel members and bars and plates riveted or bolted together. A number of methods for strengthening the bridge were analyzed by the use of a computer. Among procedures that showed the most promise included adding individual reinforcement to critical members.

An experimental investigation of the Royal Albert Bridge in Saltash, England, indicated that strengthening of the existing truss was required (*180*). The bridge consists of two 455-ft truss spans over water and 17 land spans between 70 ft and 90 ft. The main span superstructure is made up of an eliptical top chord parabolic in shape. This shape is mirrored by two suspension chains on both sides of the span. Eleven verticals connecting the top chord and bottom girders help to hold the chain to shape. Model tests were performed on the bridge to determine if strengthening was required. It was recommended that 48 new diagonal members be placed in each of the main truss spans. The members were attached at the hanger connections with the chain and an intermediate hanger. Their placement in the quadrilateral bounded by the chain, bottom girder, main and intermediate vertical hanger allowed the supplemental member to carry tension and thereby reduce bending stresses in the members. The connection detail consisted of building up a box from steel plates to surround the existing joints and inserting a pin at the new diagonal member ends.

Web-reinforcing plates were used initially to provide temporary support for the damaged lower chord member on the Marine Parkway Bridge in New York. According to a paper by Martin and Iffland (*200*), the plates were bolted to the existing member with high strength bolts, and prestressed bars were used to bridge the area to provide strength while the damaged chord was repaired. The prestressing bars were removed once repairs were complete, but the web plates remain and provide additional member strength.

Eyebar members in a truss bridge in Iowa were strengthened by two procedures according to a report by Plumb (*247*). The eight-span structure with an overall length of 1,850 ft also had pins replaced in the joints. Some of the eyebar members in the truss were strengthened by simply turning the existing turnbuckles. Those members without turnbuckles were strengthened by using a flame-shortening process. Clamp plates gripped the member on both sides of the heated region, which was approximately 12 in. in length. The plates were drawn together by using tension rods after heating the member to 1600°F. After cooling, the eyebar members bore tightly against the pins.

2.3.4.3 Addition of External Shear Reinforcement

Strengthening a concrete bridge member that has a deficient shear capacity can be performed by adding external shear reinforcement. The shear reinforcement may consist of steel side plates or steel stirrup reinforcement. Structural Preservation Systems, Inc. recommends a method where stainless steel straps are placed around the beam's perimeter (*317*). Each strap is then post-tensioned to a load of 10 kips. This method has been applied on concrete bridge systems. A stainless steel cladding may be placed over the straps to improve aesthetics.

A method that is mentioned by Warner (*355*) involves adding external stirrups. The stirrups consist of steel rods placed on both sides of the beam section and attached to plates at the top and bottom of the section. This method has been used in Sweden (*364*), with the exception that channels are mounted on both sides at the top of the section to attach the stirrups. This eliminates drilling through the deck to make the connection to a plate.

Prestressing tendons may be used on reinforced concrete box beams to increase their shear capacity according to a technical article on bridge strengthening by the OECD (*239*). The tendons may be placed vertically or inclined across the beam cross section and can be placed in or outside of the box beam web. Before prestressing forces are applied, any existing cracks should be injected with an epoxy. This technique is described in more detail in Chapter Three.

In a study by Dilger and Ghali (*86*), external shear reinforcement was used to repair webs of prestressed concrete bridges. Although the measures used were intended to bring the deficient members to their original design capacity, the techniques applied could be used for increasing the shear strength of existing members. Continuous box girders in the 827-ft-long bridge had become severely cracked when prestressed. The interior box-beam webs were strengthened by the addition of 1-in. diameter steel rods placed on both sides of the web. Holes were drilled in the upper and lower slabs as close as possible to the web to minimize local bending stresses in the slabs. Post-tensioning tendons were placed through the holes, were stressed to 80 kips, and then anchored with steel plates and nuts.

The slanted outside webs were strengthened with pairs of No. 5 deformed rebars. Before the bars were added, the inside of the web was "thickened" and reinforcement was attached with anchor bolts placed through steel plates that were welded to the rebar pairs. The web thickening was necessary because initial design calculations indicated that adding reinforcement to the inside of the webs and prestressing would have produced substantial tensile stresses at the outside face of the web. All cracks were caulked after strengthening to prevent moisture penetration and to improve appearance.

A report by Lecroq (*178*) discusses the use of external post-tensioning tendons for both flexural and shear strengthening.

The tendons used for shear strengthening can be placed as external stirrups on each side of a web. (Generally the tendons cannot be placed inside webs because of existing reinforcing and tendons.) The external tendons can be designed for either uncracked or cracked web conditions. For uncracked conditions, the same design procedures as for new structures are directly applicable. For cracked webs, the actual shape of the crack must be considered.

Audrey and Suter present several techniques for strengthening existing concrete structures (*318*). If additional longitudinal reinforcing is required, it may be grouted into longitudinal grooves cut into the existing structure. The longitudinal reinforcing also may be placed outside an existing beam web with stirrups and encased in a gunite jacket.

At least one Swiss box-girder bridge constructed since 1961 has been strengthened for shear with external post-tensioned tendons. The need for strengthening was generally recognized after severe cracking appeared. In one case, tendons were placed exterior to each of the two webs and across the bottom of the webs to tie the vertical tendons together. In the second case, tendons were proposed for each side of the two interior webs. The scheme was discarded when it became apparent that the existing bridge was in poorer than expected condition, and the bridge was replaced.

2.3.4.4 Modification Jacketing

Increasing the load-carrying capacity of bridge pier columns or timber piles supporting bent caps is normally achieved through the addition of material to the existing cross section. Jacketing or adding a sleeve around the column perimeter can be performed a number of ways.

In a paper by Karamchandani (*153*), various concepts for jacketing existing members are illustrated. These include addition of reinforcement and concrete around three sides of rectangular beams as well as placement only at the bottom of the beam web. Additional schemes are also illustrated for column members. The effectiveness of this method depends on the degree of adhesion between new and existing concrete, which can vary between 30 percent to 80 percent of the total strength of the in-situ concrete. The author suggests welding new reinforcing to the existing reinforcement and using concrete with a slump of 3 to 4 in. The use of rapid hardening cements is not recommended, since it results in a lower strength of concrete on the contact surface because of high contraction stresses.

The addition of concrete collars on reinforced concrete columns is performed most efficiently by using circular reinforcement rather than dowels or shear keys according to Klein and Gouwens (*162*). While the other methods may require costly and time consuming drilling and/or cutting, circular reinforcement does not. When this method is used, shear-friction is the primary load-transfer mechanism between the collar and the existing column. Klein and Gouwens have outlined a design procedure for this strengthening method.

In a paper by Syrmakezis and Voyatzis (*321*), an analytical method for calculating the stiffness coefficients of columns strengthened by jacketing is presented. The procedure uses compatibility conditions for the deformations of the strengthened system and the analysis can consider rigid connections between the jacket and column on a condition where relative slip is allowed.

2.3.5 Adding or Replacing Members

2.3.5.1 Adding or Replacing Stringers

The addition of stringers to an existing deficient bridge may require respacing existing stringers. The procedure increases the capacity of the existing deck and reduces the loads carried by the existing stringers. This procedure will also change the distribution of load to the stringers. For cases where the deck is not replaced a method for adding a timber stringer is illustrated in *NCHRP Report 222* (*343*).

An article by Schuett and Ritzka (*287*) reports strengthening of a bridge in Dortmund, West Germany. The bridge, constructed for a single rail line, was built of reinforced concrete in 1913 with cantilever construction and oversupports spaced approximately 56 ft on center. At one location the bridge crossed a highly traveled road that required widening. In order to provide for the widening, one of the existing supports was removed, and a new support constructed to provide a width clearance of 66 ft. The existing cantilever construction was unsuitable for the new enlarged span over the road. In order to support the rail line without interrupting rail traffic, a U-beam of concrete, approximately 7 ft deep and 10 ft wide,was cast under the existing inverted U-cross section of the bridge. After the new concrete beam had cured, it was post-tensioned to carry the full load of the rail traffic and existing bridge parts on the 66-ft span. Because of the way the new U-beam fit within the existing bridge cross section, it encroached only about 3 ft on the clearance below the bridge.

An article by Ernst and Raederscheidt (*97*) provides an interesting example of member addition for strengthening. After the second world war, the suspension bridge between Cologne and Muelheim was rebuilt with a steel orthotropic deck. In the early 1970s, the vehicular, pedestrian and rail traffic on the bridge cross section was rearranged. The revised traffic plan required a certain amount of strengthening. Under the rails, steel double tee sections of 3.37-ft depth were added over the entire length of the bridge. Cross frames were made out of tension ties below the orthotropic deck near the bridge towers in order to increase lateral stability. Replacing the concrete walkways with steel orthotropic plates required reinforcing of deck edge members. The separate plate girder approach spans to the main bridge also were strengthened. Deck edge stiffening members were deepened with additional inverted tee sections; the lower flanges of the plate girders were braced with double angles for stability; and the existing composite deck sections were replaced with a new steel orthotropic plate deck.

According to an article by Harris (*122*), supplemental steel beams were added to a reinforced concrete beam superstructure to increase the load capacity of a bridge in England. The steel beams were placed on twenty six ¼-in. centers between the existing concrete beams in the cross section, and grout bags were used to ensure uniform support of the concrete deck along the span. Because of the profile of the bridge, a void resulted between the existing concrete deck and new steel beams. This 1¼-in. to 3-in. gap was eliminated by filling it with bags filled with grout.

Berger and Beeson (*34*) used the addition of a supplemental member to increase the load-carrying capacity of a deficient stringer during upgrading of a 660-ft-long bridge in Virginia. The deficient stringer was located in a single-span approach span of the multiple steel beam structure. The supplemental

steel stringer was erected after a portion of the deck in the region was removed. The stringer was spliced at each diaphragm by using high-strength bolts.

2.3.5.2 Adding or Replacing Members in Truss Frames

2.3.5.2.1 Supplementary members for truss frames. An example of adding members to a truss panel to increase load-carrying capacity is provided in a report by Sabnis (*277*). By decreasing the length of an existing compression member by 50 percent, its allowable stress can be increased by as much as 15 percent to 20 percent.

Several interesting strengthening projects in Rumania were described at an International Colloquium on Maintenance of Structures in 1981 (*221*). For one deck-truss, Rumanian railway bridge, a third, larger truss was added between the two existing trusses. All three trusses were tied together with cross bracing. In the case of other Rumanian truss bridges, a second set of diagonals was added to create double-diagonal truss panels out of the existing single diagonal panels. Another strengthening scheme illustrated in the reference has a third chord added above the existing top chord. This third chord is tied to the existing truss with posts and diagonals.

The strengthening of the Perley Bridge in Canada illustrates the technique of adding supplemental members to increase load-carrying capacity of a compression member (*346*). Kneebraces were added in some panels of the 2,122-ft multispan steel structure to strengthen the existing members. The braces, located near midspan of the compression member to reduce the slenderness ratio, were connected with plates and bolts.

2.3.5.2.2 Replacing members in truss frames. The replacement of truss elements to strengthen a bridge is far more feasible than replacing beams. Temporary members (*360*) usually must be used to support the truss while the member is being replaced. A thorough analysis of the truss is critical to assure that replacement of a member with a stronger member will actually result in strengthening.

Frequently, the replacement of a member will require the use of an alternate member. Temporary tension members may be used to replace compression members during removal operations (*360*). As an alternative (*328, 343*) rods with turnbuckles can be used to remove the load from verticals or diagonals, so that the original member can be replaced. In each case, the selection of the appropriate member requires a detailed analysis.

In summary, replacement is probably limited to only a few instances; other less difficult procedures of strengthening should first be investigated (*290*). In addition, member replacement is usually more economical when done in conjunction with the removal of a damaged or deteriorated member. Truss member replacement requires careful analysis (*32*) and the development of a step-by-step system to assure stability of the truss during the replacement operation.

2.3.5.3 Doubling of a Truss

2.3.5.3.1 Superimposing a steel arch. The method of superimposing an arch on an existing deficient truss has been used successfully on numerous occasions. The method developed by Brungraber and Kim (*50*) is particularly useful when right-of-way problems preclude widening of the existing bridge, as was the case of strengthening an existing 139-ft, single-lane truss bridge in Kentucky (*229*). The steel arches were designed to carry the entire load, but because the existing bridge provided stability, the arch members were relatively slender. New hangers and floor beams were installed to tie the new arch to the existing truss.

A method used on several railway bridges in Europe, from about 1900 until 1940, also involved arch superposition for strengthening (*62*). In this method the arch was added on top of the existing truss and tied to it with vertical suspenders. The horizontal thrust created by the arch produces tension in the top chord of the existing truss. These forces were designed to be offset by the compressive forces in the loaded existing truss.

In the late 19th century and early 20th century it was necessary to strengthen many European railway bridges for increased train loads (*166*). Many of these bridges were steel or wrought-iron truss bridges that could be strengthened with the addition of a third chord. The third chord either could be placed as a compression chord above the existing top chord of the truss, with intervening ties, or could be placed as a tension chord below the existing lower chord, with intervening posts. In either case, the new third chord had a curved shape, as an arch if above the truss or as a cable if below the truss. Intervening ties or posts were aligned with posts in the existing truss. Several railway bridges in Switzerland, with spans up to 253 ft, were strengthened in the late 19th century with a third chord. Many railway bridges were strengthened with a third chord in Hungary between World War I and World War II. In the most recent uses of a third chord, it was customary to apply the third chord with a prestress so that it was effective for both dead and live loads.

2.3.5.3.2 Superimposing a Bailey bridge. The superposition of a Bailey bridge onto existing truss bridges has been used on occasion as a strengthening method. The Bailey bridge is normally placed inside the existing trusses of through bridges and connected by hangers to the existing truss floor beams. A number of references are available that provide significant design information on the Bailey bridge (*84, 335*). The Department of Main Roads in New South Wales, Australia, has used the Bailey bridge on numerous occasions to strengthen timber truss bridges (*107*).

Bailey bridge trusses were used to modify an existing bridge to carry heavy construction loading (*198*). The existing bridge was a through-type deck truss also made up of Bailey trusses on a 121-ft span. The construction equipment created horizontal clearance problems that were eliminated by modifying the structure to a deck-type bridge. Additional Bailey trusses were added adjacent to the original trusses by placing them under the deck near the roadway edge and near midspan of the transverse transom beam. This arrangement increased the bridge stiffness in the longitudinal direction, reduced the transom beam spacing, and increased its load-carrying capacity.

2.3.6 Post-Tensioning of Various Bridge Components

Prestressing or post-tensioning in various configurations has been used for more than 30 years to relieve stresses, control displacements, and strengthen bridges. This section will be limited to the most common configurations for application of axial force and moment to bridge structures by means of post-tensioning with linear tendons. These tendons may be steel plates

or structural shapes, as in the case with many early applications of post-tensioning, or high-strength flexible bars or cables, as in the case with recent applications of post-tensioning.

2.3.6.1 Post-Tensioning of Longitudinal Members and Decks

Post-tensioning applied axially to linear structures will counteract tension stresses, and post-tensioning applied eccentrically to linear structures will counteract both tension and flexural stresses. Both of these effects of post-tensioning were exploited in the design of new structures after World War II and in the early 1950s for strengthening existing bridges.

Quite probably the earliest use of post-tensioning for bridge strengthening occurred in the late 19th century. King post or queen post tendons were applied to timber stringers in order to increase the load-carrying capacity. Except for those early uses of post-tensioning, the first recorded strengthening applications are given by Lee in a paper in *The Structural Engineer* in 1952 (*179*). Lee's paper contains a photograph of a cast-iron-girder highway bridge being strengthened with threaded bar tendons and drawings for strengthening of the tension chord of a 160-ft-span, lattice girder (truss) railway bridge.

Other early recorded bridge post-tensioning projects are those for steel or wrought-iron trusses in Europe (*35, 36*) and for concrete or masonry arches in Europe (*286, 363*). After those projects demonstrated the feasibility of post-tensioning for repair and strengthening, the method was applied to steel and concrete stringer bridges in Europe and North America. In recent years, post-tensioning has been used to strengthen prestressed concrete bridges and many other types of bridges throughout the world.

Post-tensioning has become an accepted and relatively common strengthening method largely because of its practical advantages. Post-tensioning often can be applied without any traffic interruption, but in any case, traffic interruption is minimal. Scaffolding and other site preparations are minimal, and tendons and anchorages can be prefabricated. Post-tensioning is an efficient use of high strength steel tendons and can add substantial live-load capacity to an existing bridge under allowable stress design. If post-tensioning tendons are removed at some later date, the bridge usually will be in no worse condition than before strengthening.

When post-tensioning is applied to a bridge, it serves to increase the allowable stress range; the increase in range is controlled by the dead-load stresses applied to the bridge. If maximum advantage is taken of the increased allowable stress range, however, the overall factor of safety of the bridge will decrease slightly. For long-term strengthening projects, the lowered factor of safety may be a limitation on the amount of strengthening that may be achieved with post-tensioning.

There are additional limitations and design considerations for strengthening by post-tensioning. At anchorages where tendons are attached, there are high local stresses which require consideration. Because post-tensioning of an existing bridge affects the entire bridge, consideration must be given to the distribution of the axial forces and moments within the structure. If all members do not have equal stiffness or if all members are not post-tensioned with equal eccentricity or force, the actual distribution of stresses within the bridges will be considerably different from that which is assumed in a simple analysis.

Application of post-tensioning does require relatively accurate fabrication and construction and also requires more careful monitoring than other strengthening methods. Tendons and anchorages do require corrosion protection because they often are in locations that are subjected to saltwater runoff or salt spray. If tendons are placed beyond the original bridge profile, they are vulnerable to damage from traffic accidents or overheight vehicles if the bridge is over another roadway or from floating debris if the bridge is over a flooded stream.

Even with the limitations noted previously, post-tensioning has proved to be a viable bridge strengthening method for more than 30 years. Case histories given in the following sections have been selected to demonstrate the versatility of post-tensioning applications for a variety of bridge deficiencies, including tension, flexural, and shear overstress, crack repair, and excessive displacement. Along with the repair case histories, there are many examples of bridges that were strengthened to meet new, increased live-load requirements.

2.3.6.1.1 Stringer, box sections, and decks. Flexure—The majority of bridges in existence today function by means of beam action and thus are likely to be overstressed in flexure if stringers or other longitudinal members deteriorate or if traffic loads are increased. Flexural overstresses may exist with respect to allowable service load stresses, to allowable fatigue stresses, or to ultimate flexural capacity.

In general, post-tensioning can be applied to stringers and other longitudinal members by any one of the four schemes outlined below.

- *Scheme A.* Straight tendons are placed eccentrically with respect to the neutral axis of the structure. The eccentric tendons apply both an axial compression and bending moment to the structure.
- *Scheme B.* Tendons are placed in a polygonal or harped configuration. The tendons apply an axial compression force (and also a bending moment, if the anchorages are eccentric) and transverse forces at each change in angle.
- *Scheme C.* Tendons are placed in a polygonal configuration with compression members to carry the axial compression force. This scheme applies only transverse forces to the original structure.
- *Scheme D.* Tendons in a polygonal configuration are placed below the structure (king post or queen post). This scheme places the axial compression force on the tension portion of the original structure and applies transverse forces at each change in angle.

For identification purposes, continuous-span strengthening by any of the four schemes will be indicated with a double letter, e.g., Scheme AA.

Although prestressed concrete was developed prior to the 1950s, there appears to be no use of prestressing with tendons for strengthening, except for use of the king post and queen post configurations for timber structures. In 1949 in West Germany, Dischinger (*88*) proposed use of prestressing for a variety of composite concrete deck and steel stringer or box beam bridge types; previous to this he had proposed various other types of prestressed steel structures. Magnel in Belgium (*192*) reported testing of a prestressed steel truss in 1950. Two years later, in 1952, Lee in England described the strengthening of stringer and truss bridges by post-tensioning (*179*).

Since Magnel's prestressed steel-truss test, there have been

numerous reports of testing prestressed steel and prestressed composite structures. Many of the earlier tests, such as Magnel's, were for prestressing with respect to new structures. In the 1950s and 1960s, there was considerable testing in Eastern Europe, particularly in Czechoslovakia and the USSR, of prestressed steel beams and beams prestressed with king and queen post tendon configurations. Reference *99* summarizes some of the Eastern European static, dynamic, fatigue, and ultimate load testing. About the time of the Eastern European testing there was some limited testing of prestressed composite beams in the United States (*310*).

Testing of existing structures strengthened by post-tensioning appears to have been relatively limited until recently. Earliest testing simply involved the monitoring of bridges during post-tensioning. The truss for a highway bridge strengthened in Birmingham, England, in 1956 was monitored by means of strain gages during the strengthening process (*36*).

In 1964, Tachibana et al. in Japan (*325*) tested two-span, composite beams within the elastic range and up to ultimate load. Their tests compared an unprestressed beam, a beam prestressed before being made composite, and a post-tensioned composite beam. They noted that positive and negative moment hinges formed at approximately the same ultimate moment. Thus, the reinforced concrete slab contributed approximately the same amount to the ultimate moment whether in compression or in tension. Quite probably the reinforcing bars, in tension, contributed to the ultimate moment after the concrete had cracked in tension; several other probable explanations for the unexpected behavior were also noted by the authors.

Between 1980 and 1983 series of tests were performed on a simple-span, composite concrete deck-steel stringer bridge model by Klaiber et al. at Iowa State University (*159, 160*). Initially, the testing program verified the feasibility of strengthening a four-stringer bridge by post-tensioning only the exterior stringers. The tests showed that when the exterior stringers were post-tensioned, about two-thirds of the post-tensioning remained on those members. The remainder of the post-tensioning was distributed to the interior stringers. In 1983, the bridge was cut into four composite stringers, and those were tested to determine their ultimate capacity (*159*).

In 1985, Shanafelt and Horn (*289*) tested an AASHTO Type III prestressed I-girder made composite with a portion of concrete deck. The objective of the testing program was to determine the feasibility of repairing a damaged girder with external post-tensioning. Test results with external post-tensioning applied both before and after the girder was deliberately damaged verified the feasibility of the post-tensioning.

Also in 1985, Saadatmanesh et al. at the University of Maryland (*276*) tested two post-tensioned composite beams, one which represented the positive moment region, and one which represented the negative moment region of a continuous stringer. The test results for the negative moment region simulate those for a continuous member that is strengthened with post-tensioning.

Testing is currently underway at Iowa State university on a three-span continuous, composite bridge model. The testing program is intended to show the feasibility of strengthening continuous bridges with various post-tensioning schemes. Mockups of negative moment region, post-tensioning schemes are also being tested.

Except for distribution effects, post-tensioning within the elastic stress range can be designed with conventional structural analysis and design methods. Dischinger's 1949 paper (*88*) simply uses ordinary structural analysis principles to show the feasibility of prestressing composite bridge structures. Other engineers since then have either used conventional structural analysis and design principles or adapted analysis and design principles for prestressed concrete.

Rather extensive design specifications for prestressed steel and composite structures were developed in Eastern Europe during the 1960s. Ferjencik and Tochacek (*99*) refer to USSR specifications and present computation examples using the Czechoslovakian standards. Belenya and Gorovskii (*30*), in an English translation of a Russian paper, give elastic analysis equations and a series of charts that indicate the applicability of strengthening steel beams with post-tensioning. References *48* and *49* give extensive equations for various post-tensioning conditions and also typical design examples based on Polish design standards.

In the United States, analysis methods for prestressed steel or composite structures were published by Szilard in 1955 (*323*) and in 1959 (*322*), Barnett in 1957 (*24*), Hoadley in 1963 (*129*) and in 1967 (*130*), Stras in 1964 (310), Reagan in 1967 (*257*), and Kandall in 1968 (*151*). Szilard and Hoadley dealt with Scheme A, straight tendons within the elastic range, while Kandall dealt with Scheme C, polygonal tendons also within the elastic range. Barnett analyzed truss beams, the Scheme D configuration. Stras and Reagan dealt with analysis methods for both elastic and plastic ranges for Scheme A tendons.

In the 1980s there have been additional publications on analysis methods. Klaiber et al. (*150*) showed that post-tensioned composite beams with Scheme A tendons had ultimate loads that could be computed from conventional analysis methods. Dunker developed empirical relationships for determining the distribution of post-tensioning moments and axial forces in three-beam and four-beam composite, simple-span bridges and gave a bridge-strengthening example in a design manual (*91, 92*). Saadatmanesh et al. (*276*) has published elastic and plastic analysis methods for positive and negative moment region post-tensioning.

The anchorages for most tendons have consisted of simple brackets, often fabricated from steel plate. References *49* and *99* give extensive catalogs of the brackets employed in European countries. References *159* and *196* illustrate some of the brackets employed in the United States. Brackets of reinforced concrete fabricated for post-tensioning of prestressed I-girders are given in Ref. *289*. Existing or new diaphragms and end blocks at abutments also can be used as tendon anchorages.

Post-tensioning often is applied to stressing tendons longitudinally with hydraulic jacking cylinders. Tensioning of polygonal tendons also may be achieved by anchoring the ends of the tendons and depressing or raising the tendons to the final polygonal positions.

As mentioned above, the earliest reported use of post-tensioning for strengthening of a highway bridge was given by Lee in England in the early 1950s (*179*). The strengthening was not described in detail, but used Scheme A with straight eccentric tendons for the two cast-iron girders in the bridge.

The first cases of post-tensioning described in a reasonable amount of detail are given at the beginning of Table 4. Cases 1-1 and 1-3 are European railway bridges strengthened in the 1960s. Both cases illustrate Scheme A, with tendons placed over the central region of simple-span, steel-plate girders.

Case 1-2 illustrates the application of Scheme C, a polygonal

Table 4. Selected examples of longitudinal post-tensioning of members and decks.

Case Number	Date of Strengthening (Reference Date)	Location	Span Feet	Bridge Description	Strengthening Objective	Strengthening System and Sketch	Reference
1-1	(1964)	Argenteuil -Juvisy rail line, France	69	steel plate girder-floor beam, railway bridge built 1934-36	repair fatigue damage	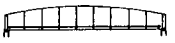 6 cables encased in concrete per girder	62
1-2	(1964)	Ostrava, Czechoslovakia	67	skewed steel plate girder-floor beam, railway bridge		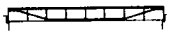 steel tee mechanism attached to outside of each girder	99
1-3	(1969)	Sasar River, Rumania	60	skewed steel plate girder-floor beam, railway bridge	strengthen for increased train load	 steel angle tendon	307
1-4	1969	Welland Canal, Ontario, Canada	44	haunched reinforced concrete tee, highway bridge built 1920		 2 cables per beam grouted in plastic tubes, beams made continuous	351
1-5	(1974)	Foxton-Barrington rail line, England	42	haunched reinforced concrete stringer, railway bridge built 1926	strengthen for increased train load and new axle spacings	 2 bars per beam encased in gunite	71
1-6	1975	West Chaska, Minnesota	30	steel stringer highway bridge, built 1923	strengthen temporarily (before replacement) for increased truck load	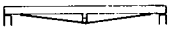 one cable per 2 beams under 12 × 12 timber beam and blocks	31
1-7	1975/76	Rhone River France	50-80-80-80-80-50	continuous haunched concrete stringer		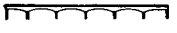 6 cables per stringer, entire length of bridge	354
1-8	1976	Clyde River, Glasgow, Scotland		continuous steel box girder cable stayed, highway bridge built 1971	strengthen to meet new design criteria	 16 bars at each approach span pier	279
1-9	1977	Lewis County, Washington		prestressed concrete stringer, highway bridge	repair damaged girders	 tendons each side of web	343
1-10	1978	Stadt-autobahn Duesseldorf, West Germany		continuous prestressed concrete single box, highway bridge built 1958-59	repair construction joint damage	 three external tendons each box beam web	285

Table 4. Continued

Case Number	Date of Strengthening (Reference Date)	Location	Span Feet	Bridge Description	Strengthening Objective	Strengthening System and Sketch	Reference
1-11	1979	Shasta Lake, California	35 stringer	(steel deck truss) continuous steel wide flange stringer, highway bridge	strengthen for additional median barrier, deck, and widening loads	 2 cable tendons and compression bars per beam	196
1-12	(1980)	West Germany		composite steel stringer, highway bridge	reduce deflections in multiple simple spans by creating continuity	 tendons each side of web	148
1-13	1981	Netekanaal, Belgium	79-131-79	continuous prestressed concrete tees	repair corrosion and compensate for design deficiencies	 18 cables of 3 lengths, 6 cables in 3 spaces between beams	81
1-14	1981	Rhone River, France	98-361-66-361 98	continuous, prestressed double concrete box, highway bridge built 1967-69	repair cracking and compensate for inadequate prestress	 12 cables for end spans, 4 additional cables in long spans	217
1-15	1982	Avenue 328 overcrossing California	90	composite steel plate girder, highway bridge	strengthen for permit loads	 2 cables per girder, grouted in galvanized pipe	196
1-16	1982	Greene County, Iowa	71	skewed composite steel wide flange highway bridge	strengthen exterior beams to meet current AASHTO specifications	 4 bars per exterior beam, epoxy coated	159
1-17	1983	Juechen, West Germany	43	skewed reinforced concrete slab highway built 1976-77	repair cracking and compensate for inadequate steel	 9 unbonded cable tendons in holes drilled longitudinally	264
1-18	1984	Autobahn Wiesbaden-Hochheim, West Germany	-116-	continuous prestressed concrete tee, highway bridge built 1963-66	repair cracking and cable damage	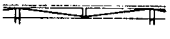 2 cables per web	96
1-19	1984	Pasco County, Anclote River, Florida	49	composite steel stringer highway bridge	strengthen bridge to increase capacity from H15 to HS20	 2 bars per beam	28
1-20	1984	Talbruecke Heckholzhausen, West Germany	98-123-123-98	curved, continuous prestressed concrete, double box beam, highway bridge built 1959	repair cracks at construction joints	 tendons across cracked joint	95
1-21	1985	Waiwaka Terrace, New Zealand	45-60 -45	continuous reinforced concrete beam and slab, highway bridge built 1955	strengthen for heavy equipment hauling	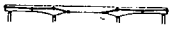	38

Table 4. Continued

Case Number	Date of Strengthening (Reference Date)	Location	Span Feet	Bridge Description	Strengthening Objective	Strengthening System and Sketch	Reference
1-22	approx. 1980	Wyoming		timber stringer highway bridge	repair shear cracks in web	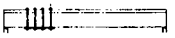 vertical steel bolts tensioned against steel plate below stringer	343
1-23	1982-83	Itzehoe, West Germany	-144-	prestressed concrete stringer highway bridge built 1965-67	repair seat for suspended span in cantilever con-construction bridge	 tendons at 15°, 30°, and near vertical	311
1-24	(1985)	Europe (not stated)	88-171-171-88	curved continuous prestressed concrete box, highway bridge built 1974	repair web shear cracking	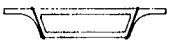 tendons drilled in webs	10
1-25	(1986)	Europe (not stated)	177-199-199-177	continuous prestressed concrete multiple box, highway bridge built 1961	repair shear cracking near piers	 vertical tendons near piers	10
1-26	(1986)	Europe (not stated)	117-141-141-141-141-141-117	continuous prestressed concrete box, highway bridge built 1970	repair shear and longitudinal cracking	 external bars	10
1-27	1956	Birmingham, England	115	steel truss (lattice girder), highway bridge built 1906	repair weakened tension chord and increase capacity	 8-90 ft bars	36
1-28	1957	Wye River, Monmouth, England	149	wrought iron truss (lattice girder), railway bridge built 1876	repair corroded strengthening box section for lower chord	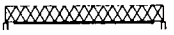 4-128 ft bars per truss	35
1-29	(1969)	Bucharest-Petesti rail line, Rumania	138	steel, Schwedler through truss railway bridge	strengthen for increased train load	 one rigid tendon per truss	307
1-30	1969	Aarwangen, Switzerland	157-157	continuous wrought iron truss highway bridge	strengthen for increased truck load and reduce motion under load	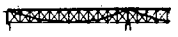 2-cable and tube mechanism per truss	220
1-31	(1975)	Czechoslovakia	335	steel truss highway bridge		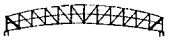 two cables per end diagonal members	99
1-32	1984	Agognetta, Italy	80	steel truss highway bridge	repair corrosion and strengthen for increased traffic loads	 one cable per truss grouted in steel box	58
1-33	1953-54	Lachen, Switzerland	131	three-hinged reinforced concrete deck arch, highway bridge built 1940	reduce crown deflection of 4.5 inches and rotation of foundations	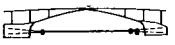 8 cables for each of two arches grouted in concrete pipe	286

tendon with an additional compression member. The mechanism was stressed by depressing the tendon at the two bends, after the upper portion of the mechanism had been anchored to the steel plate girder. The mechanisms on each of the two bridge girders were stressed simultaneously by means of weights hung from the tendons. After the tendons were deflected downward sufficiently, they were anchored to the plate girder stringers.

Cases 1-4 and 1-5 are for simple-span, reinforced concrete stringer or tee bridges. In Case 1-4, the five simple spans for the Welland Canal bridge were post-tensioned with a polygonal cable configuration, Scheme BB, so as to make the bridge continuous over five spans. Because of unknown distribution effects, the post-tensioning was applied in two stages and monitored. The railway bridge in Case 1-5 was post-tensioned span by span, by using Scheme A, and the bridge retained simple-span behavior.

The cases described up to this point were for relatively long-term strengthening. Case 1-6 is a simple span, steel stringer bridge that was strengthened temporarily, until it was replaced a few years later. Scheme D, king post strengthening, was economical because it made use of scrap timber and cable.

Cases 1-7 and 1-8 demonstrate the extent to which post-tensioning has been used recently in Europe for strengthening bridges. Case 1-7 is a six-span, continuous, haunched-concrete stringer bridge that was strengthened by straight cables over the entire length of the bridge with Scheme AA. The continuous steel box girder in Case 1-8 was part of a cable-stayed bridge that was strengthened by various methods, including polygonal tendon post-tensioning at piers, Scheme BB.

Bridges are often damaged by overheight vehicles passing underneath. Recent research in the United States (*289*) has shown that damaged prestressed concrete I-girders can be strengthened by the addition of external post-tensioning. Case 1-9 illustrates the use of Scheme A for such bridges.

A considerable number of prestressed concrete bridges in West Germany have been constructed with cantilever construction but have been made continuous with prestressing coupled through the construction joints. Beginning in the early 1970s many of those bridges began to exhibit severe cracking in the construction joint regions. Some of the bridges have been repaired by using Scheme A or B tendon configurations, as illustrated in Cases 1-10, 1-18, and 1-20.

As evidenced by the literature and the responses to questionnaires distributed as part of this research, a considerable number of steel stringer bridges have been strengthened by means of post-tensioning over the past 10 years in the United States. Most of the post-tensioning has been for simple spans with Scheme A tendons. Cases 1-15, 1-16, and 1-19 are of this type. In Case 1-16, only the exterior stringers were post-tensioned, but the axial forces and moments distributed to interior stringers were sufficient to relieve overstress there also. Continuous stringers also have been strengthened with Scheme AA, as in Case 1-11. Because the tendons were not placed with sufficient eccentricity, steel bars had to be added to the compression flange to carry the additional compression stress caused by the post-tensioning.

Much of the post-tensioning applied to existing bridges has been for strengthening purposes. Case 1-12, however, illustrates application of post-tensioning over piers, Scheme AA, in order to reduce deflections in adjacent spans.

Two additional examples of strengthening of European continuous prestressed concrete bridges are Cases 1-13 and 1-14. These bridges were not constructed with the West German methods, and therefore did not develop construction joint problems. The Belgian bridge, Case 1-13, was strengthened with straight (with respect to elevation) tendons over three spans, Scheme AA; the French bridge, Case 1-14, was strengthened with polygonal tendons, Scheme BB.

Case 1-17, with Scheme A, demonstrates a method of post-tensioning a bridge that is considered experimental at this time. The bridge was a relatively new reinforced concrete slab bridge that was cracking badly because of inadequate reinforcing. Nine holes were bored longitudinally for placement of tendons over the entire 52-ft length of the bridge. Boring proceeded at a rate of approximately 20 in./hr, except when longitudinal reinforcing or other obstructions were encountered. Cost of the post-tensioning was approximately one-half the original cost of the bridge.

Case 1-21 shows that a continuous bridge need not be post-tensioned over its entire length. The three-span bridge in New Zealand was post-tensioned with Scheme BB over each end span and pier haunch, but not over the center of the middle span. The angled tendons in the pier haunches provide upward forces near the middle span inflection points.

Many other cases of longitudinal strengthening by post-tensioning exist, some published and some unpublished. The cases described in Table 4 represent only some of many similar cases reported in the references. Of interest is the fact that the median date of the cases in the table is 1980. Obviously, strengthening by post-tensioning is being adopted as a strengthening method much more frequently now than in the past.

Shear—Many of the concrete bridges rehabilitated by post-tensioning in recent years have had shear overstresses as well as flexural overstresses. For those bridges it was often logical to repair both overstress conditions with the same method. To date the cases in the literature on post-tensioning for shear refer only to repair and not to strengthening beyond the original capacity. In order to distinguish shear strengthening from flexural strengthening by post-tensioning, shear strengthening will be defined as Scheme E.

Case 1-22 in Table 4 shows a very simple form of Scheme E, post-tensioning for shear. Bolts and a steel plate have been used to close shear cracks in a timber stringer. A similar scheme also has been proposed for reinforced concrete stringers in Ref. *364*. The scheme can be viewed as providing external stirrups to supplement the existing shear capacity of the stringer. Post-tensioning closes the shear cracks and also transfers the shear force to the post-tensioning tendons.

Case 1-23 illustrates Scheme E, post-tensioning for a shear problem, in a cantilever construction member. Shear cracks had developed at the hinge joint between a suspended and a cantilever span in a continuous prestressed concrete stringer bridge. In order to close the cracks and provide sufficient shear strength, post-tensioning was added in the stringer at three different angles.

The remaining Scheme E shear strengthening examples, Cases 1-24 through 1-26, show post-tensioning applied as vertical, or near vertical, stirrups for prestressed concrete box beam bridges. In Case 1-24, tendons were placed in the webs, in cored holes. The cored holes were difficult to align because of the longitudinal prestressing already contained in the webs. In Cases 1-25 and 1-26, the shear tendons were placed outside the webs. In Case 1-26, tendons were also placed across the bottom of the box to close longitudinal cracks.

It would appear from the examples in the literature that no

new design methods have been developed for shear strengthening. Post-tensioning may be added to carry the entire shear force, to carry the shear capacity needed in addition to the existing capacity, or simply to close existing cracks.

2.3.6.1.2 Trusses. Reference *99* presents four schemes for application of post-tensioning to trusses. Those schemes and a variation on one of those schemes will be identified in this section as follows:

- *Scheme F.* Straight tendons are placed concentrically on individual truss members.
- *Scheme G.* Straight tendons are placed concentrically on a series of members such as on the tension chord.
- *Scheme H.* Tendons are placed on a series of members, but the axes of the members and tendons do not coincide.
- *Scheme I.* Tendons are joined with compression struts to form self-contained mechanisms (similar to Scheme C).
- *Scheme J.* Tendons are placed beyond the truss, as in a king post or queen post configuration.

Continuous span use of these schemes will again be designated with a double letter.

Although, in the reference for Case 1-27, the author makes the claim that strengthening of the truss bridge in Birmingham, England, was quite probably the first use of post-tensioning for bridge strengthening, a few years earlier Lee reported similar strengthening examples (*179*). Both Cases 1-27 and 1-28 illustrate Scheme G with straight tendons placed over much of the tension chord of a simple-span truss. Both trusses were repaired by post-tensioning and, in Case 1-27, the truss capacity was increased by 12 percent. In Case 1-27, bearing plates were cleaned and lubricated to ensure that the axial shortening associated with the post-tensioning would not be inhibited.

Case 1-29 is only one of the eight bridges described by Sterian in Ref. *307*. The truss bridges strengthened in Rumania were railway bridges, which required strengthening for greater train loads. Many of the bridges were post-tensioned with rigid tendons, some of which were elongated with the heat from locomotive steam. The rigid tendons were not described as high-strength steel and probably were of mild steel.

One of the more extensively documented truss-strengthening projects is Case 1-30. This truss bridge in Switzerland is the first reported case of strengthening continuous trusses. The tendon configuration is Scheme II, with an added, sliding compression chord member to take the compression force of the polygonal tendons. The tendons, therefore, apply only vertical forces to the truss at the quarter points of each of the two spans. Stresses computed from measured strains in the truss during post-tensioning were as much as 30 percent less than computed. After 9 months, testing showed that only 5 percent to 7 percent of the original post-tensioning had been lost.

Scheme F is represented by Case 1-31. The cambered Czechoslovakian truss bridge was proposed to be strengthened by post-tensioning the end diagonals. These diagonals had the highest tension stresses of the diagonals in the truss.

Case 1-32 describes a truss bridge strengthened in Italy by means of tendons in the Scheme G configuration. The author of this paper suggests a large potential for strengthening truss bridges in Italy by similar post-tensioning.

Scheme J, a king post or queen post configuration, has been suggested in several publications, including a recent FHWA report (*277*). No examples of this scheme were found in the literature for strengthening existing bridges, perhaps because of the clearance problems which it presents.

2.3.6.1.3 Arches. Only one example, Case 1-33, was found for strengthening arches by longitudinal post-tensioning. The bridge was designed by Maillart in Switzerland and constructed just before World War II. The three-hinged arch design relied on soil pressure to prevent spread of the abutments. However, poor soil conditions allowed spread and rotation of the abutments, along with a sag of almost 4 in. at the arch crown. Part of the sag was reversed by jacking, but the reversal was only temporary. The spreading condition was permanently stabilized in the early 1950s by pulling the abutments toward each other with post-tensioning. The post-tensioning raised the crown of the arch slightly and thus reversed the increasing sag. The cost of strengthening was 24 percent of the replacement cost.

2.3.6.2 Post-tensioning of Transverse Members and Decks

2.3.6.2.1 Floor beams and decks. With the relatively common use of post-tensioning for longitudinal members, it is a relatively simple extension to apply post-tensioning to floor beams and decks. The same structural and constructional principles apply to both longitudinal and transverse post-tensioning.

Cases 2-1 and 2-2 in Table 5 describe the post-tensioning of two different types of transverse beams in the San Francisco-Oakland Bay Bridge. In Case 2-1, the center supports for the large reinforced concrete beams, which were continuous on two spans, were removed. Polygonal tendons configured so as to exert upward forces at the removed supports, Scheme B, were anchored to the beams and post-tensioned. The steel beams in Case 2-2 were strengthened for additional loads by attaching and post-tensioning high-strength plates as prestressed cover-plates under bottom flanges, a version of Scheme A.

In Case 2-3, the Welland Canal Bridge had new diaphragms poured above piers. These diaphragms were then post-tensioned to increase load transfer among the longitudinal tee beams.

Since 1976, the Ontario Department of Transportation and Communications has been enlarged in a research program for strengthening laminated timber decks by post-tensioning. The laminated timber decks, originally held together with nails, developed very poor wheel-load distribution after the nails corroded. Post-tensioning the decks with high-strength bars above and below the decks considerably improved the load distribution. Case 2-4 is one of the strengthened Ontario bridges.

Cases 2-5 and 2-7 are two examples of strengthened steel floor beams. In Case 2-5, the beams were post-tensioned by using a king post configuration, Scheme D. In Case 2-7, a beam with a double overhang was proposed to be strengthened with tendons in positive moment regions only.

In Case 2-6, tendons were used to prevent the spreading of prestressed concrete box beams. The scheme is very similar to the scheme for strengthening laminated timber decks.

2.3.6.2.2 Arches. Since the mid-1950s, masonry deck arch bridges have been repaired with transverse post-tensioning. The deck arch bridges typically are filled with soil above the arches up to the level of the railway or roadway. Loads on the railway or roadway exert lateral pressures on the masonry retaining walls above the arches. If the pressure is too great, it will crack the walls directly above the arches or split the arches longitudinally.

Table 5. Selected examples of transverse post-tensioning of members and decks.

Case Number	Date of Strengthening (Reference Date)	Location	Span Feet	Bridge or Member Description	Strengthening Objective	Strengthening System and Sketch	Reference
2-1	(1963)	San Francisco-Oakland Bay Bridge, California	65 to 85	reinforced concrete transverse beams	compensate for removal of center supports for beams	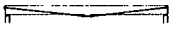 strand-bar combination	212
2-2	(1963)	San Francisco-Oakland Bay Bridge, California		steel wide flange transverse beams	strengthen for increased truck loads	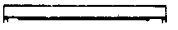 T-1 plate on bottom flange	212
2-3	(1969)	Welland Canal, Ontario, Canada		new concrete bearing diaphragms	increase shear transfer among stringers	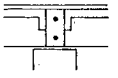	351
2-4	1982	Pickerel River, Ontario, Canada		laminated timber deck	improve load distribution	 bars above and below deck, continuous longitudinal channel	331,347
2-5	(1983)	Pike and Morgan Counties, Illinois	25	wide flange steel floor beams	strengthen for increased truck loads	 bars pregrouted in PVC tubes, double corrosion protected	173
2-6	(1983)	DuPage County, Illinois		multiple prestressed concrete box beams	prevent further spreading of box beams	 bars cut into deck and below beams with waler system	173
2-7	(1985)	Denkendorf, West Germany		steel floor beams	repair corrosion	 2 tendons per beam (proposed)	377
2-8	(1956)	Bawtry Viaduct, England		masonry deck arch, railway bridge	repair spreading retaining walls and longitudinal crack in arch	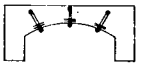 transverse tendons near top of retaining wall and top of arch	363
2-9	(1969)	Vienne River, France	67	masonry deck arch, highway bridge built in 1850, widened in 1968	repair longitudinal cracks up to 0.80 in.	 7 transverse cables per arch	170

Cases 2-8 and 2-9 illustrate methods of repairing deck arches for the problems outlined above. If only the arches are split, tendons need only be placed at arch level, as in Case 2-9. If walls are also cracked and spreading, tendons may be placed both at arch level and directly below the railway or roadway, as shown in Case 2-8.

2.3.7 Connections

Modification of existing connections to increase the load-carrying capacity of a bridge can fall into a number of categories. Included in this strengthening method would be connections for shear, splice plates, cover plates, or connections on truss bridges.

When cover-plate connections for load-carrying capacity are investigated, one of the critical considerations is the fatigue strength. Welding at the toe of the cover plate has been found to be a prime cause of fatigue failure. A number of techniques for improving the detail to eliminate fatigue problems have been shown to be effective. In a study by Sahli et al. (*280*), model specimens had the cover-plate ends retrofitted with bolted splice plates. Test results showed that the fatigue strength could be improved by using this technique. The test specimens consisted of W14 × 30 sections on a 15-ft span with two 5¾-in. × ½-in. × 4-ft cover plates welded along the flanges. Fillet welds ¼ in. in size were used in the connection. The end of the plates were retrofitted by using high-strength bolts for a friction-type connection. The beam and plate materials consisted of A588 steel. It was shown that the connection could be upgraded from a stress Category E to a Category B rating based on AASHTO Specifications.

Cover-plate ends were strengthened with splice plates on a steel plate girder bridge in Wisconsin (*373*). The twelve-span plate girder bridge was found to be deficient in a number of ways. Plate girders were made up of cover plates welded to the flange plates, and splice plates were placed on both sides of the girder flange in the cover-plate termination region. The connection was placed in the tension areas of both the top and bottom flanges.

The stringer-to-floor beam connection, which was made by welding, was replaced with a bolted connection to increase fatigue strength. Stringers were removed from the floor beam by flame-cutting the stringer flange and web weld, and they were reattached with bolted clip angles.

According to a study by Beauchamp et al. (*27*), tensile joints at the bottom chord of a Warren truss were strengthened by adding reinforcing bars. The bridge was made up of two 250-ft skewed-through-Warren truss spans and was originally designed for AASHTO H20 loading. The design was modified, and the bridge was required to carry H20-S16 loading, which necessitated strengthening of the floor beam-truss joint. The bottom truss chord consisted of W12 × 133 steel sections which were strengthened by welding 2- to 4-ft-long No. 9 reinforcing bars onto the section at each of four locations of the junction of the flange-web weld.

Additional strengthening of these joints was performed after the bridge was damaged by the impact of a vehicle. After the fractured bottom chord was repaired by a post-tensioning procedure, the bottom chord tensile joints were strengthened through the addition of bolted steel plates across the locations previously strengthened by the addition of reinforcing bars. The plates were designed to carry 50 percent of the member live-load forces with the bridge assumed to be stressed to 90 percent of yield at the lowest possible load rating. It was anticipated that this strengthening procedure would lower the fatigue stress range for the welds in the joint vicinity.

The Perley Bridge in Canada is an example of strengthening the existing riveted truss connection according to a paper by Vaidyanathan (*346*). The 2,122-ft multispan steel structure was determined to be in need of upgrading, and high-strength bolts were used to replace rivets in the connections for members subjected to tension and stress reversals. Where possible, welded details required for strengthening were avoided.

Strengthening of eyebar members in trusses may be categorized as a method of connection-strengthening. A cantilever-through-truss bridge was strengthened by adding a third eyebar between the existing two members (*230*). The new eyebars contained no eyes, so the connection to the existing eyebar pins was made by using U-shaped yokes with bolted plates.

A procedure for strengthening damaged eyebars in truss members was presented in a study by Sanders et al. (*282*), in which a full-scale truss bridge was tested in the field. The strengthening methods included removing the old eye and forming a new eye from cold-rolled bar stock that was welded to the sides of the existing bar. The test results indicated that this eye was at least as strong as the original member. It was not possible to quantify the ratio of strength increase.

2.3.8 Developing Additional Bridge Continuity

2.3.8.1 Additional Supplemental Supports

The addition of a supplemental support has been used sparingly in this country because of the large cost associated with installation. However, the federal government (*277, 343*) and some states, such as Florida (*266*), have presented methods of installing additional piers to existing bridges with minimal disturbance to the bridge. Most of the methods presented in these references can be used for the installation of a new pier system. However, the methods presented are intended for improving an existing pier system by adding additional piers adjacent to the existing ones. These methods are reviewed in the following paragraphs.

One method of installing additional piers was presented in *NCHRP Report 222* (*343*). It consisted of installing additional pile groups on each side of the bridge and adding a new pier cap across these piles to convert the original span into two shorter continuous spans. If the pile groups are properly placed, the bridge can be widened at the same time the continuous spans are created.

The addition of a central support for a truss bridge was presented in a recent FHWA report (*277*). The authors concluded that this method is best suited to conditions where it is easy to place the additional support; however, the truss must be analyzed to determine if it is adequate to carry the new forces resulting from the added support.

2.3.8.2 Modification of Simple Spans

A bridge consisting of simple spans (any number of spans greater than two) can be converted into a continuous span by simply connecting the two adjacent simple spans. This modification in the structural system obviously reduces the magnitude of the positive moments near midspan; however, it also creates sizable negative moment at the supports. In order to accomplish this modification a moment and shear-type connection must be provided. The connection can be designed by using standard practices. Berger (*32*) noted that this method could be used to increase bridge capacity by reducing the maximum positive moment. His work shows the type of connection needed in order to transfer both moment and shear in steel stringers.

CHAPTER THREE

APPLICATIONS

As has been previously noted, Chapter Three of the report is a strengthening manual. The other chapters provide supplementary and background information. Sections 3.1 and 3.2 provide general information and the economic analysis, respectively. The remaining eight sections of this chapter (3.3 to 3.10) present the various strengthening methods.

3.1 GENERAL INFORMATION

3.1.1 Background

The economic analysis procedure presented in Section 3.2 assists the user in determining if it is more cost effective to replace a given bridge or to strengthen it. Assuming it is more cost effective to strengthen it, the same analysis procedure can also be used to determine which strengthening procedures are the most cost effective. The economic analysis procedure developed makes use of an equivalent uniform annual cost analysis approach and considers factors, such as annual maintenance costs, initial construction costs, service lives, interest rates, etc. In the remaining sections of this chapter, the various strengthening techniques and procedures have been organized according to the method; for the convenience of the user a table is provided arranged according to bridge type. Upon entering the table with the particular type of bridge in need of strengthening, the user is referred to a section or sections where strengthening information for that particular bridge may be found. A single strengthening procedure is applicable to more than one type of bridge or type of stringer. For example, external post-tensioning can be used to reduce live load stresses in steel stringers, reinforced concrete stringers, prestressed concrete stringers, simple span bridges, continuous bridges, and so on. The strengthening procedures included in this chapter are procedures that have been used successfully in the field or have been tested in the laboratory sufficiently so that they can be employed in the field with essentially no risk. Questionable procedures or those needing additional research to determine their longevity have not been included. In the next few years, as a result of future research, several new strengthening procedures most likely will be developed; these then could be added to this manual.

Each strengthening procedure in this chapter includes a description of its use, a description of its limitations, and information on basic cost. For most procedures, decision aids are provided to assist users in determining the adequacy of the strengthening procedure in their particular situation. For several procedures, design aids are also given to assist the users. For each strengthening procedure, references are given describing where the technique has been employed and where additional information may be obtained. In an effort to keep this chapter a reasonable length, only a few references have been cited for each strengthening procedure. Those desiring additional strengthening information are referred to Section 2.3 for the comprehensive literature review.

Every effort has been made to present the different strengthening techniques in clear practical formats to facilitate their use. However, because of the wide range of variables involved (i.e., span lengths, magnitude of overstress, magnitude of loading, etc.) most of the strengthening systems presented are conceptual, and the designs and dimensions, where given, are for illustration purposes only. It is important to note that the design of a strengthening system for a particular bridge should be done only by a qualified engineer.

In a few instances proprietary products are presented. However, inclusion of a proprietary product in this manual does not constitute a recommendation by the research team or by the Transportation Research Board.

3.1.2 Scope of Manual

This chapter presents strengthening procedures that may be used on the majority of bridges; the only bridges specifically excluded were those demanding highly specialized techniques such as suspension, box-beam, curved, and cable-stayed bridges. With the exception of the box-beam bridges, previously mentioned bridges are not specifically identified; but several of the techniques presented in the manual are applicable. However, because of the complex interaction of the various elements of these bridges, strengthening of one component should not be done without a thorough investigation of its effect on the rest of the bridge.

No special considerations have been accorded skewed bridges, although the majority of the strengthening techniques presented are applicable to skewed bridges. Approximately 65 percent of the bridges in the NBI have zero degree of skew (i.e., right-angle bridges), and only 13 percent of the bridges in the NBI have skew angles greater than 30 deg. Thus, even though skew angle has not specifically been included in the manual, the guidelines developed do cover the majority of the bridges.

Although bridge length is not a specific limiting factor in the various strengthening procedures, the majority of the techniques apply to short to medium length bridges. However, several of the strengthening techniques are equally effective for long-span bridges also.

All strengthening procedures presented apply to the superstructure of bridges with one exception (see Sec. 3.6.3). Several methods have been included for the strengthening of reinforced-concrete pier columns. No information is included on the strengthening of existing foundations, as such information is dependent on soil type and conditions, type of foundation, forces involved, and so on, and thus is not readily presentable in a manual format.

Some of the strengthening procedures illustrated have shown field welding being employed. However, field welding in certain situations is not the best practice. In older bridges the type of steel is sometimes unknown and thus the weldability of the steel is also unknown. In these situations, bolted connections should be employed unless laboratory tests are undertaken to determine the steel's weldability. Even when it is determined that the steel involved is weldable, welding should not be used in locations where it would lower the fatigue resistance of the original structure. Regardless of what strengthening procedure is employed, special consideration should be given to fatigue. This fact is repeated several different times in the presentation of the various strengthening techniques.

3.1.3 Use of the Manual

Each strengthening method listed in the manual contains a general description of its application, general cost information, design and analysis procedures where appropriate, and related references. The strengthening methods are organized by sections (see Table 6A); this allows the user to make comparisons between the various strengthening methods.

For those manual users who prefer to have the information presented by type of bridge, Table 6B is given. This table lists, by bridge type (by NBI identification number and name), sections in the manual where appropriate strengthening techniques and pertinent references may be located. Thus, the user can locate strengthening information for a particular situation by two methods—by strengthening method (Table 6A) or by type of bridge (Table 6B). As previously noted, an economic analysis (see Sec. 3.2 of Chapter Three) is also included to aid in the determination of the most cost-effective solution to a bridge strengthening problem.

It is recommended that the user become familiar with the manual's contents prior to using it. As a guide for using the manual, a flow chart shown in Figure 24 summarizes the steps that should be taken in employing the manual.

After determining that the manual contains information on the type of bridge in question, the first step in using the manual is to determine the load rating desired for the particular bridge. This will vary from state to state and thus, if it is unknown, the office of the state bridge engineer should be consulted. Ideally, all bridges should meet a given state's bridge policy requirements for new bridges; however, in most instances this is not financially possible. Johnston and Zia (*144*) have presented a table for determining an appropriate level of service for each bridge. Note that these level-of-service goals were based on a survey conducted by the North Carolina DOT. This information is included only as a guideline; as noted previously, requirements of the individual state should be used. Like highways, bridges are classified according to the functional service provided by the route in meeting statewide transportation needs. Listed below is the functional classification list presented by Johnston and Zia; note there are only three classifications in their list as opposed to the seven classifications in the NBI.

1. *Interstate and Arterial Systems.* Provide moderate to high volume highways for travel between major points.

2. *Collector Systems.* Primarily provide intracounty service with shorter travel distances and generally more moderate speeds. Collectors are subdivided into major and minor collectors.

3. *Local Systems.* Provide access to farms, residences, busi-

Table 6A. Contents of strengthening method sections.

3.3. Lightweight Deck Replacement
- 3.3.1. Types of Lightweight Decks
  - 3.3.1.1. Steel Grid Deck
  - 3.3.1.2. Exodermic Deck
  - 3.3.1.3. Laminated Timber Deck
  - 3.3.1.4. Lightweight Concrete Deck
  - 3.3.1.5. Aluminum Orthotropic Plate Deck
  - 3.3.1.6. Steel Orthotropic Plate Deck
- 3.3.2. Cost Information
- 3.3.3. Design Procedure
- 3.3.4. Summary

3.4. Providing Composite Action Between Bridge Deck and Stringer
- 3.4.1. Introduction
- 3.4.2. Applicability and Advantages
- 3.4.3. Shear Connectors
- 3.4.4. General Cost Information
- 3.4.5. Design Considerations
- 3.4.6. Summary

3.5. Increasing Transverse Stiffness of a Bridge
- 3.5.1. Introduction
- 3.5.2. Applicability and Advantages
- 3.5.3. Limitations and Disadvantages
- 3.5.4. General Cost Information
- 3.5.5. Design Procedures

3.6. Improving the Strength of Various Bridge Members
- 3.6.1. Addition of Steel Cover Plates
  - 3.6.1.1. Steel Stringer Bridges
  - 3.6.1.2. Reinforced Concrete Bridges
  - 3.6.1.3. Timber Stringer Bridges
  - 3.6.1.4. Compression Members in Steel-Truss Bridges
  - 3.6.1.5. Strengthening Tension Members of Truss Bridges
- 3.6.2. Shear Reinforcement
  - 3.6.2.1. External Shear Reinforcement for Concrete, Steel, and Timber Beams
  - 3.6.2.2. Epoxy Injection and Rebar Insertion
- 3.6.3. Jacketing of Timber or Concrete Piles and Pier Columns

3.7. Adding or Replacing Members
- 3.7.1. Adding or Replacing Stringers
- 3.7.2. Adding or Replacing Members in Truss Frames
  - 3.7.2.1. Adding Supplementary Members
  - 3.7.2.2. Replacing Truss Members
- 3.7.3. Doubling of a Truss
  - 3.7.3.1. Steel Arch Superposition on a Through-Truss Bridge
  - 3.7.3.2. Superimposing a Bailey Bridge

3.8. Post-Tensioning Various Bridge Components
- 3.8.1. Introduction
- 3.8.2. Applicability and Advantages
- 3.8.3. Limitations and Disadvantages
- 3.8.4. General Cost Information
- 3.8.5. Design Procedures
  - 3.8.5.1. Longitudinal Post-Tensioning of Stringers
  - 3.8.5.2. Other Post-Tensioning

3.9. Strengthening Critical Connections

3.10. Developing Additional Bridge Continuity
- 3.10.1. Addition of Supplemental Supports
  - 3.10.1.1. Introduction
  - 3.10.1.2. Applicability and Advantages
  - 3.10.1.3. Limitations and Disadvantages
  - 3.10.1.4. General Cost
  - 3.10.1.5. Design Considerations
- 3.10.2. Modification of Simple Spans
  - 3.10.2.1. Introduction
  - 3.10.2.2. Applicability and Advantages
  - 3.10.2.3. Limitations and Disadvantages
  - 3.10.2.4. General Cost
  - 3.10.2.5. Design Considerations

Table 6B. Bridge type versus strengthening section.

			Section							
			3.3	3.4	3.5	3.6	3.7	3.8	3.9	3.10
Bridge Category	Main Structure Type Coding, Item 43 of NBI	Bridge Description	Lightweight Deck Replacement	Providing Composite Action	Increasing Stiffness of Bridge	Improving Strength of Bridge Members	Adding or Replacing Members	Post-Tensioning of Various Bridge Components	Strengthening of Critical Connections	Developing Additional Bridge Continuity
1	302	Steel stringer/multibeam or girder								
	303	Steel girder and floor beam system	●	●	●	●	●	●	●	●
	402	Steel continuous stringer/ multibeam or girder								
2	702	Timber stringer/multibeam or girder			●	●	●	●		●
3	309	Steel deck truss								
	310	Steel-through-truss (to include steel pony-truss)	●			●	●	●	●	●
4	102	Concrete stringer/multibeam or girder				●		●		
	104	Concrete tee beam								
	204	Concrete continuous tee beam								
5	502	Prestressed concrete stringer/ multibeam or girder						●		
6	111	Concrete-deck arch						●		

nesses, or other abutting properties. Traffic volume is low and local in nature.

The acceptable load capacity is to provide a safe and functional level of strength to serve most vehicles expected on the route being served. The minimum acceptable level is that which would accommodate essential vehicles such as passenger cars, school buses, fire trucks, heating oil delivery trucks, garbage trucks, and so on. The bridge capacity goals—acceptable and desirable—as determined by Johnston and Zia are presented in Table 7.

Once a bridge capacity goal has been selected, a thorough structural analysis should be undertaken and possible strengthening solutions identified. The purpose of performing a detailed structural analysis is twofold: (1) More accurate methods of structural analysis for determining the load capacity of a bridge are available today, and in many instances, these calculations may lead to an increased load capacity. (2) It will also be necessary to identify which structural elements or combination of structural elements are in need of strengthening. If elements of the existing bridge are badly deteriorated, the underlying causes should be identified and arrested in conjunction with strengthening the structure. As previously noted, potential strengthening procedures can be located two ways—by strengthening method or by bridge type.

Shown in Figure 24 are the various steps one would perform in developing a strengthening system for a given undercapacity bridge. As can be seen, the initial steps are a structural analysis to determine the structural deficiencies, determination of strengthening objectives, and review of various strengthening alternatives. Those strengthening methods that are determined feasible and likely to strengthen the bridge to the desired load capacity are retained for further consideration. In addition, if several elements are in need of strengthening, different combinations of strengthening methods may be used to achieve the desired load capacity.

The second step in the decision-making process is to consider the cost effectiveness of each method under consideration. This will involve determining an Equivalent Uniform Annual Cost (EUAC) for each strengthening method and the EUAC of

Table 7. Bridge capacity goals.†

Bridge Functional Classification	Single-Vehicle Capacity (tons)	
	Acceptable	Desirable
Interstate	NP*	NP
Major Collector	25	NP
Minor Collector	16	NP
Local	16	NP

*NP = Not Posted; Capacity = 33.6 tons for single vehicles.

†Table from Reference (144).

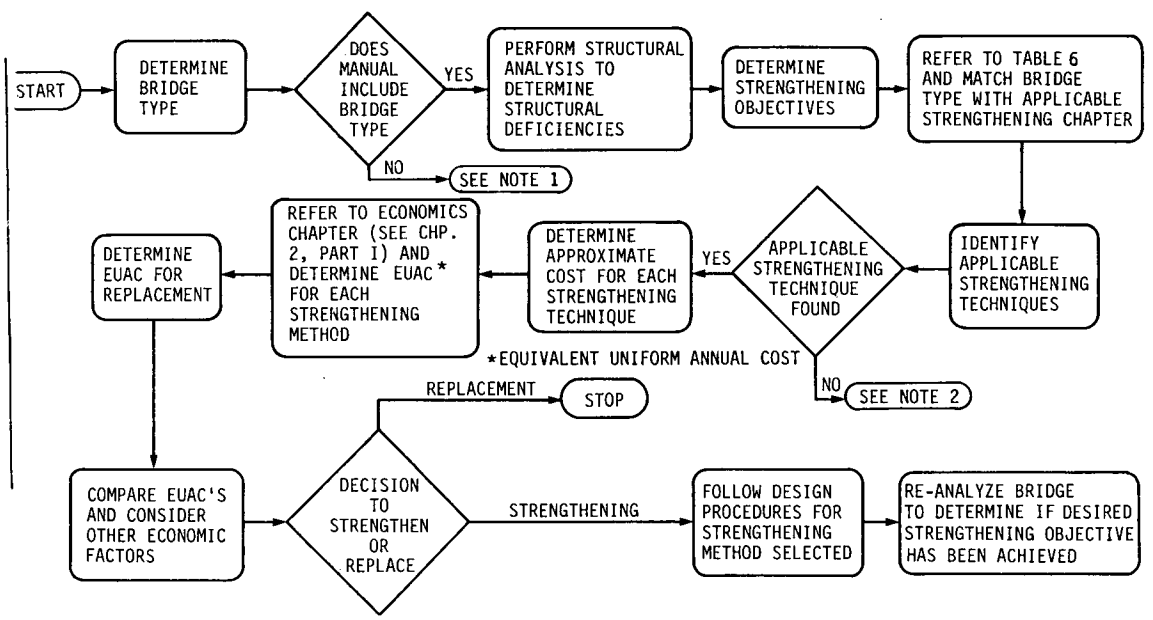

NOTE 1: THE BRIDGE TYPES EMPHASIZED IN THE STRENGTHENING MANUAL ARE THOSE MOST COMMONLY FOUND IN THE UNITED STATES. MANY OF THESE STRENGTHENING TECHNIQUES, HOWEVER, COULD BE APPLIED TO OTHER TYPES OF BRIDGES. IT IS RECOMMENDED THAT THE MANUAL USER REVIEW EACH STRENGTHENING TECHNIQUE AND EVALUATE ITS POTENTIAL EFFECTIVENESS.

NOTE 2: ADDITIONAL INFORMATION ON EACH PARTICULAR BRIDGE STRENGTHENING PROBLEM CAN BE FOUND IN THE LITERATURE REVIEW (SECTION 2.3) AND THE BIBLIOGRAPHY.

Figure 24. Decision flow chart for bridge strengthening.

replacing the structure. Section 3.2 presents procedures for determining EUACs, as well as example calculations.

The final step in the decision-making process is to compare EUACs for each strengthening method and the replacement alternative. In addition, any unusual problems that may have an influence on the decision-making process should be considered at this time. After all these factors are reviewed, a decision is made as to replacement or which strengthening method or combination of methods should be applied. If the decision is to strengthen the existing bridge, the design and analysis procedures outlined in the following sections of this chapter may be used.

3.2 COST-EFFECTIVENESS ANALYSIS OF STRENGTHENING BRIDGES

In analyzing a bridge having a deficient load rating, the bridge engineer is faced with making a decision from three alternatives: (1) replacing the existing bridge, (2) strengthening the existing bridge (which also includes selecting the "best" strengthening method from those available), or (3) leaving the existing bridge in its present state. Making a decision among the three alternatives involves a number of factors, all of which must be carefully evaluated. The most effective method of selecting an alternative is accomplished by evaluating the economic advantages associated with each alternative. By attempting to quantify each alternative in terms of its economic value, the engineer can achieve a rational method of making comparisons among alternatives.

3.2.1 Background

Several different methods of analysis are applicable in determining the cost effectiveness of various bridge strengthening alternatives. In a report by McFarland et al. (*204*), methods of analysis for determining cost effectiveness were categorized. Although this report dealt with highway accident evaluations, the information is appropriate for evaluating bridge strengthening as well. A commonly used definition of cost-effectiveness analysis was stated as "a systems analysis whereby information of the effectiveness and cost of alternative systems are used together with specified decision-making rules to choose among alternatives" (*204*). This definition is valid for the approach taken in this report.

According to De Neufville and Marks (*204*), the cost-effectiveness evaluation methods may be considered to fall into the following five categories: (1) standard benefit-cost analysis, (2) consumer's surplus, (3) decision analysis, (4) multi-attribute analysis, and (5) multi-objective evaluation and negotiation. Most evaluations for engineering-related issues fall into the first category, which includes a number of different arithmetical procedures. These methods serve as aids in the evaluation of proposed investments. Winfrey (*370*) breaks the arithmetical procedures into six distinct techniques of analysis: (1) equivalent uniform annual cost method, (2) present worth of costs method, (3) equivalent uniform and annual net return method, (4) net present value method, (5) benefit/cost ratio method, and (6) rate of return method.

A first cost analysis procedure was used in a study by Berger (*32*) that addressed the problem of increasing the load-carrying capacity of existing bridges. An improvement factor was determined for each rehabilitation alternative on the basis of improved load-carrying characteristics (e.g., increase in flexural capacity). The cost effectiveness factor (CEF) was obtained by dividing the improvement factor by the estimated unit cost of the alternative. The most desirable alternative was the one with the largest CEF. Berger mentions that other factors should also be considered before a final determination of an alternative is made. These include (1) maintenance and operational considerations, (2) long term cost benefits, and (3) safety aspects.

Work by Weyers et al. (*366*) in developing cost-effectiveness methodology for the maintenance, rehabilitation, and replacement of bridges uses a life-cycle cost procedure. Analytical models for replacement and rehabilitation alternatives were established by considering pertinent variables needed to provide valid cost information. From these models, equivalent uniform annual costs (EUACs) were calculated and compared to determine the most desirable alternative.

Warner and Kay (*357*) used statistical decision theory as a basis for decision-making with regard to corrective work on defective structures. This procedure requires costs to be estimated for defined courses of action, which are incorporated into a statistical model dealing with the probabilities of these actions being taken. Using this technique, minimum expected costs are derived, and the preferred action is the one with the minimal cost. It was noted that the probabilities used in this procedure, as well as the cost data, are estimates and will affect the accuracy of the method.

Value engineering is another analysis technique that has been used for making cost effectiveness decisions for engineering problems. A procedure applied to bridge rehabilitation and replacement is briefly outlined by Park (*242*). The procedure is a broad management device that contains as one phase an objective involving the evaluation of alternatives. This evaluation phase is best performed by considering life cycle costs (*154*), (*242*).

Each of the aforementioned procedures could be used to evaluate the economic benefits of strengthening versus replacement. The method of analysis recommended in this report falls into the category of determining annual costs by using common engineering economy principles. A discussion of the reasons for selecting this method is contained in the following section.

3.2.2 Selection of Cost-Effectiveness Evaluation Method

An initial literature review indicated that a widely applied method of evaluating the cost-effectiveness of strengthening bridges included consideration of the initial strengthening cost as a percentage of the initial replacement cost. Although this is a very simple method of measuring cost-effectiveness, determining the percentage at which a replacement alternative becomes a more cost-effective solution is a difficult procedure. In the literature reviewed, different percentages were suggested, each with little validation.

As noted in the discussion of the responses to question Q-2 of the questionnaire, At what maximum percentage of replacement cost would you choose strengthening over replacement? (see Fig. 19), agreement on a percentage of replacement cost varied widely among bridge engineers. Another problem with this procedure is that the initial cost of most projects represents less than half of the total life-cycle costs involved. These factors

indicated that a method of determining the cost effectiveness of bridge strengthening needed to be developed that not only included initial strengthening costs but also life-cycle costs and user benefits to be gained by strengthening or replacement.

One problem associated with a life-cycle cost analysis procedure is the difficulty in accurately assessing the future costs associated with most bridge projects. However, progress is being made in the determination of bridge life cycle costs and other economic aspects that may be associated with bridges (i.e., user benefits that occur through accident reduction programs) through better bridge management programs.

Only within the past 10 to 15 years have engineers begun to implement systems capable of better managing the nation's bridges. These management systems have come at a time when fewer bridges are being replaced (*239*); thus, better maintenance of our present inventory of bridges is required. As usual, maintenance funds are limited, and effective management systems are required to ensure that the most effective use is made of these limited resources. Obsolete and deficient bridges on our road systems also pose potentially high liability costs. These factors, combined with the rapidly deteriorating condition of the nation's bridges, have prompted the need for better bridge management programs.

Among the first steps taken in improving the management of our current inventory of bridges was the National Bridge Inspection Program implemented in 1968. This program established a numerical sufficiency rating for each bridge, upon which eligibility for federal funding for rehabilitation or replacement was determined. As a result, nearly all the nation's bridges have now undergone inspection; results of these inspections are available on computer files at the federal and state levels (*239*). A brief description of the data from these inspections was presented in Section 2.1.2.

With information available on such a large number of bridges, it has become necessary to develop a system capable of sorting the inspection data and establishing priorities for bridge replacement and rehabilitation projects. One such program is the Level of Service System for Bridge Evaluation developed by the North Carolina DOT. The North Carolina DOT system ranks bridge replacement and rehabilitation projects based on deficiency points accumulated in a level-of-service evaluation of each bridge (*144*). Bridges are then ranked on the basis of deficiency points, and decisions as to what action should be taken (e.g., rehabilitation, strengthening, or replacement) can then be made.

Several states now manage their long-term bridge maintenance needs using specialized computer programs that carefully account for dollars spent on bridge maintenance and operation costs and that are capable of forecasting future long-term bridge expenditures. As an example, the Pennsylvania DOT recently developed a new computerized system that will enable them to manage more effectively their large inventory of bridges (*131*). When this system is fully implemented, the Pennsylvania DOT will have a large cost data base to use in determining and forecasting life cycle bridge costs.

The progress made in the inspection of the nation's bridges, the recording of those results, the capability of sorting the inspection results and ranking bridge rehabilitation projects, and the programs capable of accounting for and forecasting long-term bridge expenditures have all contributed greatly toward the overall management of our nation's bridges. Each of these undertakings was designed to handle large numbers of bridges with the goal of establishing broad and long-term bridge management plans.

As noted in a report on bridge rehabilitation and strengthening by the OECD (*239*), it is "...well nigh impossible to estimate a priori the overall cost of rehabilitating or strengthening bridges along a route." Many difficulties are associated with the decision to strengthen or replace a deficient bridge. Each undercapacity bridge presents unique problems and parameters that must be considered, such as bridge location and condition, traffic volume, availability of funding, existing interest rates, and so forth. These problems preclude an accurate assessment for a "general situation." In consideration of all of these factors, a method of analysis was developed that allows the manual user to provide cost data and other pertinent information for their particular case. Specific design examples are given to illustrate the procedure, and representative cost information is provided for selected strengthening methods.

3.2.3 Analytical Model

The method developed for evaluating the cost effectiveness of strengthening bridges is based on the determination of Equivalent Uniform Annual Costs (EUACs) that are commonly used in engineering economy studies. No consideration is given to the "do nothing" alternative; the only alternatives are to strengthen or replace. The models and equations used to determine EUACs for the strengthening and replacement alternatives include life-cycle costs and user benefits. The EUAC models were developed with flexibility so that they would be capable of handling any number of different variables that may be applicable to the analysis. Once a bridge has been identified as needing repair, strengthening, rehabilitation, or replacement, it must be evaluated as a unique bridge engineering problem having a unique set of economic factors. The EUAC method can then be applied, and the most cost-effective alternative can then be selected. Unless special conditions warrant consideration, the alternative with the lowest EUAC is the most desirable choice.

The generalized models that have been developed for use in calculating EUACs are shown in Figures 25 and 26. The variables for the two figures are defined below.

- *Figure 25:*
  - R = replacement structure first cost;
  - B = net salvage value of present structure;
  - C_{AR} = annual maintenance costs associated with a new structure;
  - S = net salvage value of replacement structure;
  - N = service life of new structure;
  - F_j = single future expenditure at time n_j (i.e., deck replacement or a deck overlay).
- *Figure 26:*
  - D = initial strengthening cost;
  - C_{AS} = annual maintenance costs of the existing structure after strengthening;
  - N' = remaining service life of the existing bridge;
  - F_j = single future expenditure at time n_j.

Mathematical expressions can now be developed for each model on the basis of the time value of money. For the replacement model:

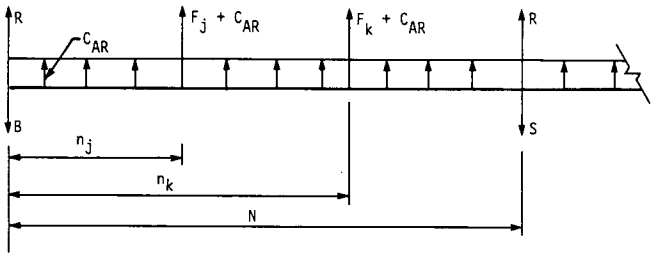

Figure 25. Cash-flow diagram for replacement model.

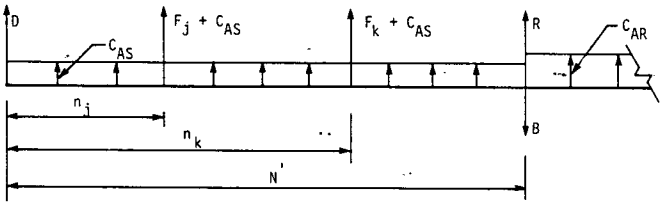

Figure 26. Cash-flow diagram for strengthening model.

$$\text{EUAC Replacement} = R(A/P,i,N) - B(A/P,i,N) - S(A/F,i,N) + C_{AR} + (A/P,i,N)\left(\sum_{j=1}^{m} F_j \cdot (P/F,i,n_j)\right)$$

If one assumes N to be very large and B to be relatively small in comparison to R, this equation can be simplified.

$$\text{EUAC Replacement} = (A/P,i,N)(R - S) + (S - B)i + C_{AR} + (A/P,i,N)\left(\sum_{j=1}^{m} F_j \cdot (P/F,i,n_j)\right) \quad (1)$$

where i = effective interest rate; $(A/P,i,N)$ = capital recovery factor $= \dfrac{i(1+i)^N}{(1+i)^N - 1}$; and $(P/F,i,n_j)$ = present worth of a future sum $= \dfrac{1}{(1+i)^{n_j}}$

It should be noted that salvage values can be either positive or negative. In most situations there is little salvage value to be gained from an existing bridge, and the bridge owner normally pays for its removal (usually as part of the bid price of a replacement structure). The removal cost would be represented by a negative salvage value in the EUAC equations. In addition, the removal cost of the new bridge can be assumed to be equal to that of the old bridge in most cases. Therefore, the $(R-S)$ term will normally be the total bid price for a replacement structure, and the $(S-B)i$ term can be ignored.

The strengthening model is more difficult to represent mathematically. Two key factors in developing the strengthening EUAC equation are presented below. The first is that after eventual replacement, all costs are common to both the replacement model and strengthening model. As a result, these costs will offset one another in a comparison of differences. The second, and more crucial, point is that the strengthening improvement benefits only the existing structure. Therefore, investment costs of bridge strengthening should be recovered only over the remaining life of the strengthened bridge. The mathematical equation for the strengthening EUAC equation can now be written as follows:

$$\text{EUAC}_S = (A/P,i,N')(D) + C_{AS} + LS + (A/P,i,N')\left(\sum_{j=1}^{m} F_j \cdot (P/F,i,n_j)\right) \quad (2)$$

where: i = effective interest rate, $(A/P,i,N')$ = capital recovery factor; $(P/F,i,n_j)$ = present worth of a future sum; and LS = level of service factor.

Brief discussions of the different variables used in the economic analysis models and the factors that may affect them are presented in the following sections: Included in the discussion of each variable are sample cost figures obtained from different sources and pertinent comments as to the variables' effect on the total EUAC. Additional factors that may be considered in the economic analysis models are also presented. All costs listed in the manual reflect 1986 prices.

3.2.3.1 Replacement Structure First Cost (R)

The factor that has the greatest effect on the EUAC for the replacement model is the initial replacement cost. Several key factors exist that may significantly influence initial bridge replacement costs; these are listed as follows:

1. Span length. As a general observation, per-square-foot costs for the construction of new bridges tend to increase with longer span lengths.
2. Roadway realignment.
3. Environmental studies and their effects.
4. Construction of temporary detours or bridges.

The results of a survey of initial bridge replacement costs obtained from various states are given in Table 8. As can be seen from the table, longer spans, which are most economically built from rolled steel sections or plate girders, tend to have higher per-square-foot costs compared to shorter spans of concrete slab and precast, prestressed concrete I-beam bridges. The results indicated in Table 8 should be used only as a guide in selecting an initial replacement cost, since most bridge agencies tend to maintain good records on average replacement costs.

3.2.3.2 Service Life of New Structure (N)

Information obtained from various state DOTs indicated that a minimum service life of 50 years is commonly assigned to new structures for use in a life-cycle cost analysis. This is also consistent with information obtained from the literature review. One exception to this 50-year service life is in the southwest portion of the United States, where a 70-year service life is typically assumed. Factors that affect the service life of a new structure are (1) the initial design and its quality; (2) the quality of the construction materials used; (3) the quality of workmanship used in construction; (4) the level of maintenance performed over the life of the structure; and (5) the severity of

Table 8. Bridge replacement costs for 1985 from selected states.

State	Bridge Type	Cost Per Sq Ft* Range	Cost Per Sq Ft* Ave	Remarks
Illinois	WF steel beam	$35-$55	$47	
	Plate girder	$50-$65	$54	
	Deck beams Prestressed concrete	$30-$45	$40	
	Reinforced concrete beam--deck girder	$50-$70	$60	
	Prestressed precast concrete I girder Cast-in-place deck	$35-$50	$44	
Iowa	Steel beam continuous		$45	
	Prestressed precast concrete, cast-in-place deck		$40	
	Concrete slab		$35	
Minnesota	Prestressed beam	$36-$54	$40.84	State Cost Study, data from 13 bridges
		$33-$129	$44.74	County Cost Study, data from 13 bridges
	Welded steel continuous beam	$45-$81	$50.94	State Cost Study, data from 8 bridges
		$30-$70	$55.71	County Cost Study, data from 8 bridges
	Timber slab	$0-$46	$36.66	County Cost Study, data from 15 bridges
	Rolled steel continuous beam	$40-$88	$60.25	County Cost Study, data from 6 bridges
	Quad tee	$0-$45	$37.55	County Cost Study, data from 11 bridges
Missouri	Steel beam		$42	
	Steel beam continuous		$45	
	Prestressed concrete		$37	
Wisconsin	Steel beam continuous	$31-$50	$45	10-20 bridges constructed per year
	Prestressed concrete	$27-$42	$35	20-40 bridges constructed per year
	Concrete slab	$30-$45	$35	50-60 bridges constructed per year

*All costs listed are bid prices for replacement structures and include removal of the existing bridge, construction of a new bridge (labor and materials), and traffic control costs, if applicable.

the climate and the effects of factors such as water and deicing agents on the bridge. The use of a structure service life of 50 years or more in determining the EUAC of the replacement alternative has little effect on the sensitivity of the results obtained from the models. In addition, because of the many uncertainties in predicting the long-term plans for the use of a particular bridge, if one is to err, it is probably better to err on the conservative side by using 50 years as the bridge service life.

3.2.3.3 Remaining Service Life of Existing Bridge (N')

The remaining service life of existing bridges is a variable that is difficult to quantify accurately. The most common method for determining remaining service life is based on the engineer's estimate from field inspections. A number of problems exist with this approach: (1) There are few if any quantitative guidelines for evaluating remaining service life, and the engineer's estimate of remaining service life is usually a subjective one. (2) It is difficult to eliminate the possibility of bias being involved in the estimate depending on preferred plans for the bridge (e.g., assigning a bridge a short service life if replacement is preferred). The problem of possible bias entering the bridge inspector's rating of remaining service life has already been noted (see Sec. 2.1.2 for a more thorough discussion of this subject). Research to develop methods that will allow accurate assessments of remaining service life to be determined are currently under way (*224*). These methods, however, involve experimental techniques and will be useful only for steel stringer and steel girder bridges.

An additional factor to consider in determining the remaining service life of an existing bridge is the effect of strengthening or rehabilitating the bridge or both. In some instances, unless an extensive rehabilitation program in undertaken at the time of strengthening, there will not be a significant increase in the bridge's remaining service life. Only an extensive rehabilitation project undertaken at the same time the bridge was strengthened would extend the remaining service life of the bridge.

Because of the problems noted in determining remaining service life and lack of quantifiable methods, it is left to the bridge engineer's discretion to choose a reasonable remaining service life. It should be noted, however, that choosing a longer remaining service life will result in lower strengthening EUACs and vice versa.

3.2.3.4 Interest Rate (i)

The interest rate recommended for use in Eqs. 1 and 2 is 6 percent and represents the real or effective interest rate on borrowed capital. In general, a higher interest rate favors future expenditures (i.e., strengthening), while a lower interest rate favors the immediate expenditure of capital (i.e., replacement).

The effects of inflation are accounted for in the effective interest rate of 6 percent. The relationship between interest rates and inflation is given in Eq. 3:

$$i_o = \frac{1 + i_p}{1 + y} - 1 \qquad (3)$$

where i_o = relative or effective interest rate, i_p = nominal interest rate (usually based on high grade municipal bonds), and y = rate of inflation (usually based on changes in the consumer price index).

More detailed information on the effects of inflation and interest rates on highway construction and financing can be found in Refs. *52, 370,* and *298.* Table 9 gives the capital recovery factor and the future worth values for an effective interest rate of 6 percent.

Table 9. Capital recovery factor, *A/P,* and present worth of a future sum, *P/F,* for interest rate, *i,* of 6 percent.

n	Present Sum, P A/P	Future Sum, F P/F
1	1.06000	0.9434
2	0.54544	0.8900
3	0.37411	0.8396
4	0.28859	0.7921
5	0.23740	0.7473
6	0.20336	0.7050
7	0.17914	0.6651
8	0.16104	0.6274
9	0.14702	0.5919
10	0.13587	0.5584
11	0.12679	0.5268
12	0.11928	0.4970
13	0.11296	0.4688
14	0.10758	0.4423
15	0.10296	0.4173
16	0.09895	0.3936
17	0.09544	0.3714
18	0.09236	0.3503
19	0.08962	0.3305
20	0.08718	0.3118
21	0.08500	0.2942
22	0.08305	0.2775
23	0.08128	0.2618
24	0.07968	0.2470
25	0.07823	0.2330
26	0.07690	0.2198
27	0.07570	0.2074
28	0.07459	0.1956
29	0.07358	0.1846
30	0.07265	0.1741
35	0.06897	0.1301
40	0.06646	0.0972
45	0.06470	0.0727
50	0.06344	0.0543
60	0.06188	0.0303
∞	0.06000	0.0000

3.2.3.5 Annual Maintenance Costs (c, C')

Table 10 shows annual bridge maintenance costs, as obtained from the various DOTs surveyed. As can be seen from the table, maintenance costs can vary significantly between states. This variation is due primarily to different accounting procedures used by each state for funds spent on bridge maintenance, rehabilitation, and repair. In addition, the climate and use of deicing agents in each state will affect the frequency and scope

Table 10. Annual maintenance costs based on data provided by selected states.

State	Bridge Type	Annual Maintenance Costs
Illinois	All	$1,227 per bridge*
Iowa	Steel beam	$0.091/ft^2
	Steel beam contiuous	$0.043/ft^2
	Prestressed concrete	$0.052/ft^2
	Reinforced concrete beam--deck girder	$0.082/ft^2
	Slab	$0.062/ft^2
	Steel high-truss	$0.114/ft^2
	Pony truss	$0.227/ft^2
Minnesota	Steel beam	$1,925 per bridge
	Steel beam continuous	$1,880 per bridge
	Prestressed concrete	$1,245 per bridge
	Reinforced. concrete deck-girder	$2,000 per bridge
	Other (the majority being steel trusses)	$2,830 per bridge
Missouri	All	$0.093/ft^2
Wisconsin	All	$300 per bridge**

*1985 average cost based on approximately 7,500 bridges.

**Wisconsin also reported an average cost of $5/ft^2 for a deck overlay and $23/ft^2 for a deck replacement.

of maintenance items to be performed. It should also be noted that most strengthening techniques, after being applied, will not require additional maintenance beyond what is normally performed on the bridge. The manual user is given the option of using the cost data in the EUAC equations.

3.2.3.6 Bridge Removal Costs (B,S)

Key factors that may significantly affect bridge removal costs are superstructure type, bridge length, number and type of abutments, depth of removal below the existing ground line, and environmental precautions required during removal. Disposal costs of bridge debris may vary widely depending on haul distances and landfill costs if the debris cannot be buried at the site. In addition, specifying some items for salvage, such as guardrails and beams for future use, may partially affect removal costs.

Figure 27 summarizes bridge removal costs obtained from local Iowa contractors. When the data were analyzed from the surveys, it was found that square foot costs versus length were much more varied than total cost versus length. This would indicate that bridge width is not a significant factor in estimating bridge removal costs. In addition, comments and results from the surveys indicated that removal costs of bridges with timber abutments and piers could be as much as 30 percent less than similar bridges having concrete abutments and piers.

The manual user may elect to ignore removal costs altogether and thereby greatly simplify the calculations required in Eq. 1. This may be possible because the $(S-B)i$ term will normally be quite small compared to the other terms (less than 5 percent of the $EUAC_R$ total); and as pointed out earlier, the bid price of the replacement structure will normally include any removal costs. For the example in Section 3.2.4, the $(S-B)i$ term is only 0.8 percent of the $EUAC_R$ total and would not have significantly affected the results obtained.

3.2.3.7 Level-of-Service Factor (LS)

The concept of a level-of-service factor is introduced as a means of quantifying the economic benefits a road user would realize with the construction of a new bridge. An existing bridge, particularly one with an obsolete geometry or poor load rating, cannot be expected to provide the same level of service to the road user as would a new bridge. A new bridge can be expected to have reduced accident rates, reduced traffic delays, reduced

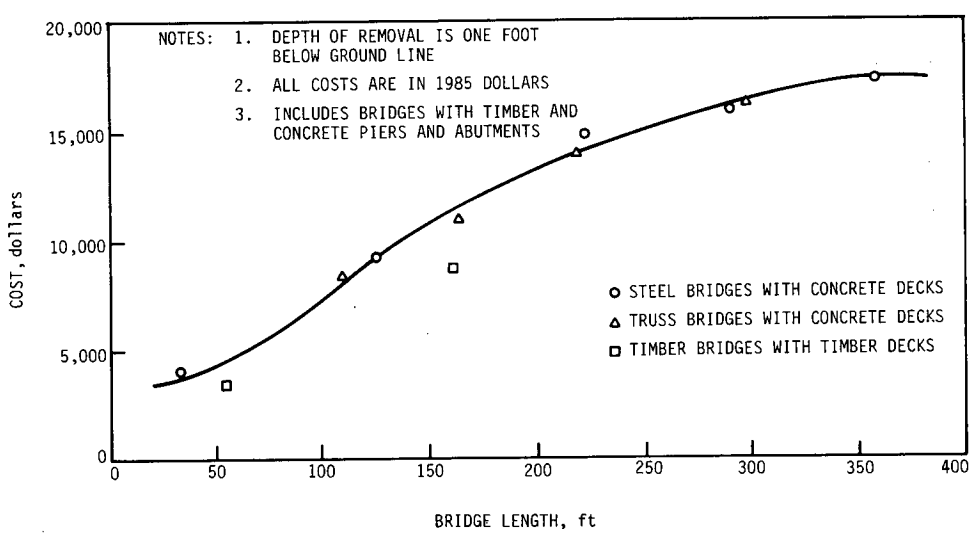

Figure 27. Bridge removal costs.

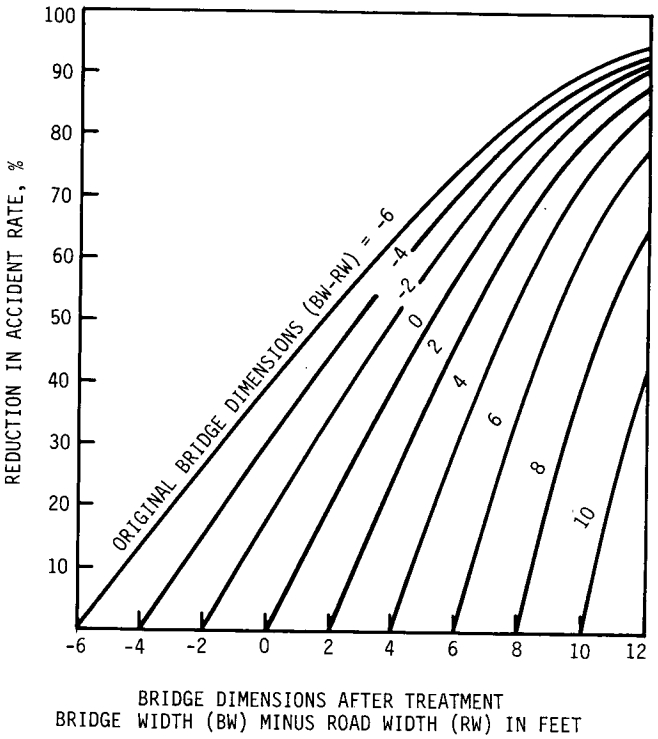

Figure 28. Percent reduction in accident rate associated with increases in relative bridge width.

extra mileage because of detours of overweight vehicles, and other intangible savings to the user. These reductions and savings are considered an additional annual cost of keeping an existing bridge in service and are represented as an additional cost in the strengthening alternative. Therefore, the level-of-service factor is a measure of the cost difference in the level of service provided to the road user between a new and existing bridge.

If one assumes that the existing bridge can be strengthened to a legal load rating, the level-of-service factors are reduced principally to functions of bridge geometry. A bridge with a poor geometry can be expected to cause traffic congestion, delays, and higher accident rates. Traffic congestion and delays are normally difficult to quantify in terms of costs without the governing agency conducting an on-site study of their effects. Accident costs are more easily predicted, however, either through the use of historical data or accident rate tables for narrow bridges. Thus, only accident costs associated with an existing narrow bridge that is to be strengthened or replaced are used in determining the increased costs to the road user.

To demonstrate the approach of quantifying level of service for the analytical model in this paper, reference is made to previous work by MacFarland (*204*). As have most studies dealing with accident rates associated with bridges, this study relates accident rates to roadway approach width and bridge width. Figure 28 is taken from the study and shows the percent reduction in the accident rate that could be expected with an increase in relative bridge width. This factor, multiplied by the cost of an average accident (see Table 11) (*225*), is the level-of-service cost of keeping the existing bridge in service.

3.2.3.8 Initial Strengthening Costs (D)

Where appropriate, strengthening cost information is included with the description of each strengthening method in the design manual. The majority of the cost data provided was obtained from bid estimates of the strengthening method by estimators at the Iowa DOT. Contract specifications for each strengthening method were developed for typical bridges (*344*) in need of strengthening and bid estimates were obtained. The following assumptions were common to each bid specification considered:

1. The strengthening method to be applied is not an emergency repair, but rather a carefully planned decision to upgrade the existing bridge at a particular point in the future.
2. The bridge requiring strengthening crosses a water obstacle. The majority of bridges (particularly relatively short-span bridges) tend to satisfy this assumption. If the bridge crosses another road or railroad, additional time constraints and additional precautions to protect the roadway (or railroad) below significantly affect the cost of strengthening.
3. The specified time of year for the strengthening of the bridge is during the prime construction months. This requirement was necessary to eliminate potential problems with curing concrete, steel welding, and the like that occur in the winter months.
4. There were no special problems with access to the work site.
5. The bridge could be closed if a particular strengthening method required it; that is, a suitable detour was available. It was also assumed that detour arrangements could be made with other highway agencies (i.e., municipalities, counties, etc.) at no extra cost.
6. Removal costs of construction debris are not prohibitively expensive (i.e., excessive haul distances, landfill site costs, etc.).
7. Painting estimates include removal, containment, and disposal of lead-based paints and contaminated wastes.

Only a few of the strengthening methods reviewed in the literature search provided detailed cost information that could be effectively used in the manual. These costs were supplemented where possible with cost data received in the initial strengthening questionnaires and with manufacturers' information. All costs reported in the manual reflect 1986 prices. In addition, the wide variety of factors involved with some strengthening methods precluded obtaining meaningful cost data for them.

Table 11. Highway accident costs.[1]

Fatal accidents	$268,700 per fatality
Personal injury[2]	$2,280 per injury
Property damage	$530 per accident
All accidents	$1,636 per accident

[1]The cost of an average accident includes medical costs, productivity losses, property damage, and other costs to society as estimated by the National Highway Traffic Safety Administration. The average cost was determined by taking the total estimated 1980 economic-loss-to-society costs due to motor vehicle accidents divided by the total number of accidents and adjusting for inflation.

[2]Based on the average cost of AIS1 accidents.

Several factors may influence the feasibility and initial strengthening cost of a bridge. The availability and cost of materials and specialized equipment may preclude some strengthening methods and enhance the desirability of others. Finding personnel who have the specialized skills and experience to perform the work, be they agency maintenance crews or local contractors, may prove to be difficult and costly. Above all, if a given bridge requires strengthening because of deterioration and the underlying problems that led to that deterioration are not corrected, the strengthening alternative may possibly be applied needlessly.

3.2.3.9 Other Factors

In addition to the factors just mentioned, several other factors need to be considered in the decision-making process; these are briefly discussed in the following paragraphs. Some of these factors may be quantified in terms of their economic value and introduced into the EUAC models. Other factors, which cannot be included in the EUAC model, are presented only as information to be considered by the engineer.

3.2.3.9.1 Adaptability of substructure to bridge strengthening. Although this report does not specifically cover the strengthening of piers and abutments, it is critical that these structural members be capable of supporting increased loads if the superstructure is strengthened. In most cases, however, older abutments and piers have reserve capacity and should be capable of small load increases. Careful inspection and analysis of existing piers and abutments should be carried out prior to strengthening the superstructure.

3.2.3.9.2 Aesthetics and historical significance. Several states (e.g., Virginia) have made significant efforts to strengthen and preserve bridges that are historically significant. The majority of these bridges are of the through-truss type, some dating back to the 1880s. Proposed uses for these aesthetically pleasing or historically significant bridges can be found in Ref. *378.*

3.2.3.9.3 Funding. Congress established the Highway Bridge Replacement and Rehabilitation Program, contained in the Surface Transportation Act of 1978, authorizing the federal expenditure of funds to assist states in the replacement and rehabilitation of structurally deficient, physically deteriorated, or functionally obsolete bridges. The program, administered by the FHWA, uses the numerical "sufficiency rating" established in the National Bridge Inspection Program of 1968 to allocate funds toward the replacement or rehabilitation of deficient and obsolete bridges. Structures (including both on-system and off-system bridges) having a sufficiency rating of 50 or less are eligible for replacement, while bridges with a sufficiency rating between 50 and 80 may be eligible for rehabilitation funding. Federal funding is only available for structurally deficient or functionally obsolete bridges. The availability of federal funds, as well as the availability of funds by the bridge owner, may be a large factor in the decision-making process between bridge strengthening or replacement.

3.2.3.9.4 Current and future needs of the area. Although difficult to assess, a thorough evaluation of the existing bridge and its ability to serve the current and future needs of the highway system should be determined. The load rating of the existing bridge (or replacement structure) should be adequate to serve the needs of the surrounding community. In particular, the structure should have a load rating adequate to support truck traffic essential to the economic needs of surrounding communities.

Although in most areas the average daily traffic (ADT) continues to increase at a steady rate, new urban communities may see sharp increases in ADT, while very rural communities may remain constant or even decrease slightly. These changes in ADT may indicate the need for urgent action or the postponement of any needed improvements. Although these factors are extremely difficult to predict, they should be carefully assessed when the decision is made between bridge strengthening and replacement.

3.2.3.9.5 Maintenance of essential traffic flow. One other factor to be considered in the economic analysis of bridge strengthening versus replacement is the maintenance of essential traffic flow during construction. This construction aspect is very situation-dependent and is difficult to quantify accurately. Several methods have been developed for determining the many costs associated with traffic flow at construction sites. One such method was developed by the Texas Transportation Institute (*206*). The method was programmed and goes by the name QUEWZ (Quque and User cost Evaluation of Work Zones). Some of the key factors in maintaining essential traffic flow follow.

Costly temporary bridges or bypasses may need to be constructed if a bridge is to be closed for strengthening or replacement. If a detour is required, however, there are additional costs to the road user as well as possible usage payments to other counties or municipalities for rerouting traffic onto their highway system. Partial lane closures on high-volume roadways may cause traffic congestion and unacceptable long delays for motorists as well as a possible safety hazard to construction site workers. In addition, liability costs will need to be considered for each method of maintaining essential traffic flow during construction.

3.2.4 Sensitivity Analysis of Economic Model

The results of a sensitivity analysis are presented to illustrate the effect of changing certain input variables used in determining EUACs. Replacement and strengthening EUACs were computed for a potential strengthening situation using the variables previously introduced. The magnitude of each input variable was varied while keeping all other variables constant, and then EUACs were calculated.

The costs associated with the replacement structure were summarized as follows: R = \$50,000, N = 50 years, i = 6 percent, B = −\$4,000, S = −\$4,000, C_{AR} = \$300, $(A/P,i,N)$ $(\Sigma F_j \bullet (P/F,i,n_j))$ = \$487, and EUAC_R = \$3,960.

The costs associated with strengthening the existing bridge are summarized as follows (it should be noted that the initial strengthening cost is one-half of the initial replacement cost): D = \$25,000, C_{AS} = \$400, LS = \$1,073, N′ = 20 yrs, $(A/P,i,N')$ $(\Sigma F_j \bullet (P/F,i,n'_j))$ = \$307, and EUAC_S = \$3,960.

Figure 29 illustrates the changes that occurred as each input variable was changed. For the replacement alternative, the magnitude of the effective interest rate chosen is clearly the most significant factor. A service life of 50 years or more has little effect on the EUAC_R. In addition, the $(S-B)i$ term in the EUAC_R equation has little effect on the replacement EUAC, and can normally be ignored. For the strengthening alternative, the effective interest rate, remaining service life, and level-of-

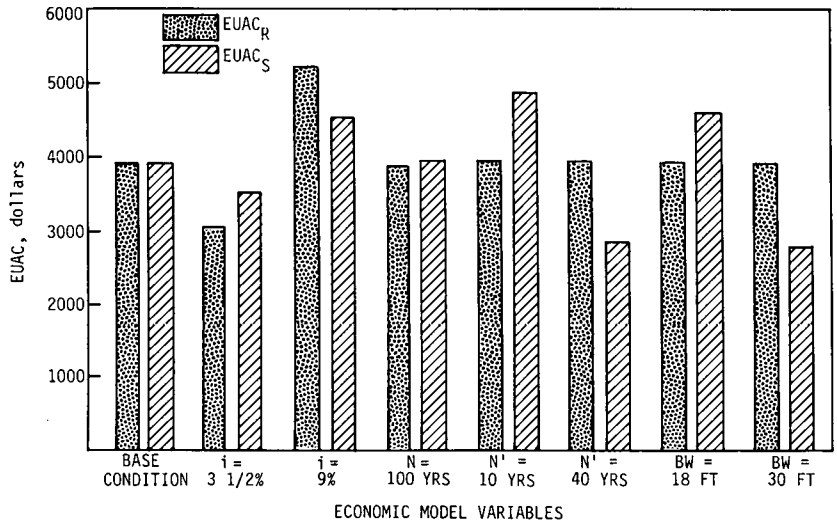

Figure 29. Results of sensitivity study indicating effects on EUAC by changing selected model variables.

service factor can significantly affect the EUAC of strengthening.

3.2.5 Numerical Example

An example is presented to illustrate the analysis procedure developed. A typical bridge is considered to be in need of either strengthening or replacement, and EUACs are computed for various alternatives.

1. *Existing Bridge.* Superstructure type = simple supported, steel stringer, noncomposite concrete deck bridge; span length = 60 ft; roadway width = 24 ft; existing load capacity = HS-15; estimated remaining service life = 20 years; and desired load capacity = HS-20.

2. *Replacement Alternative.* It can be expected that the span length of the replacement structure will be slightly longer than the original bridge because of slight changes in highway alignment and a desire to slightly increase the vertical clearance under the bridge.

- Replacement bridge: Superstructure type is simple supported, precast, prestressed concrete (PPC) I-beams with a cast-in-place (CIP) deck; span length = 70 ft; roadway width = 30 ft; and expected service life = 50 years.
- Replacement structure first cost: The replacement cost for a PPC I-beam bridge with a CIP deck is estimated at \$33/ft^2 (excluding removal costs of the existing structure). Total replacement cost is R = (70 ft) (30 ft) (\$33/ft^2) = \$69,300.
- Projected annual maintenance costs: Basic annual maintenance and operating costs are C_{AR} = \$450/year. Projected deck overlay in 15th year at \$5/ft is F_1 = (30 ft) (70 ft) (\$5/ft^2 = \$10,500. Projected deck replacement in 30th year at \$23/ft^2 is: F_2 = (30 ft) (70 ft) (\$23/ft^2) = \$48,300; $(A/P, 6, 50)$ $[F_1 (P/F, 6, 15) + F_2 (P/F, 6, 30)]$ = (0.06344) [(10,500) (0.4173) + (48,300) (0.1741)] = \$811/year.
- Salvage value of present structure: The estimated cost of removal of a 60-ft bridge is figured from Figure 27; B = −\$4,700.
- Salvage value of replacement structure: The estimated cost of removal for a 70-ft bridge from Figure 27 is S = −\$5,500.
- EUAC for replacement alternative: $\text{EUAC}_R = (A/P, 6, 50)(R - S) + C_{AR} + (S - B)i + (A/P,i,N)[\Sigma F_j \bullet (P/F,i,n_j)]$ = (0.06344) [69,300−(−5,500)] + 450 + [−5,500−(−4,700)] (0.06) + 811 = \$5,958/year.

3. *Strengthening Method 1.* Strengthening method 1 involves making the deck composite with the steel stringers. This method requires coring out the concrete above the stringers, adding shear connectors, and replacing the concrete. The initial strengthening cost, to include traffic control measures, is estimated at D = \$12,190. No additional maintenance costs per year for this strengthening method are expected.

- Projected annual maintenance costs: Projected costs of maintaining and operating the existing bridge on a yearly basis are C_{AS} = \$950. Projected deck overlay required in 5 years at \$5/ft^2 is F_1 = (24 ft) (60 ft) (\$5/ft^2) = \$7,200; $(A/P, 6, 20)$ $[(F_1)$ $(P/F, 6, 5)]$ = (0.08718) [(7,200) (0.7473)] = \$470/year.
- Level of service factor: A 3-year study was conducted of accidents reported at the existing bridge site. The study determined that the number of accidents that could be expected per year if the existing bridge remained in service was 1.84. A new bridge, with a 30-ft roadway, can be expected to provide a 60 percent reduction in the accident rate (Fig. 28). The average cost of a motor vehicle accident is \$1,636 (Table 11). LS = (Annual accident rate)(average accident cost) (percent reduction) = (1.84) (1,636) (0.60) = \$1,806/year.
- EUAC for strengthening method 1: $\text{EUAC}_{S1} = (A/P, 6, 20)(D) + C_{AS} + LS + (A/P,i,N')[\Sigma F_j \bullet (P/F,i,n_j)]$ = (0.08718) (12,190) + 950 + 1,806 + 470 = \$4,289/year.

4. *Strengthening Method 2.* Strengthening method 2 involves adding a pier at the midpoint of the span. The initial strength-

ening cost, to include traffic control measures, is estimated at $D = \$26,767$. An additional maintenance cost per year because of increased waterway maintenance is projected to be \$300/year.

- Projected annual maintenance costs: $C_{AS} = \$950 + \$300 = \$1,250$. Projected deck overlay required in 5 years at \$5/ft^2 is $F_1 = \$7,200$; $(A/P, 6, 20)\ [F_1(P/F, 6, 5)] = \$470$/year.
- Level-of-service factor: Same as Strengthening Method 1; $LS = \$1,806$/year.
- EUAC for strengthening method 2: $\text{EUAC}_{S2} = (A/P, 6, 20)(D) + C_{AS} + LS + (A/P, 6, 20)(\Sigma F_j(P/F, 6, 5)) = (0.08718)(26,767) + 1,250 + 1,806 + 470 = \$5,860$/year

5. *Comparison of Alternatives.* $\text{EUAC}_{S1} = \$4,289$/year; $\text{EUAC}_{S2} = \$5,860$/year; $\text{EUAC}_R = \$5,958$/year.

Based on the various assumptions made, Strengthening Method 1, providing composite action, is the most cost-effective alternative.

Generally, the alternative that provides the smallest EUAC will be chosen as providing the most cost-effective solution. Other factors that could have been considered in the example, some of which may be quantified and used in the EUAC equations, are: adaptability of substructure to bridge strengthening, aesthetics and historical significance, funding, current and future needs of the area, and maintenance of essential traffic flow.

3.2.6 Summary

A method for performing a life-cycle analysis related to bridge strengthening has been presented. A cost-effectiveness evaluation may be made between various strengthening alternatives and replacement alternatives. Pertinent variables are described for the economic model used in the analysis and selected cost information is provided. Additional costs are given in the following sections of the strengthening manual. However, the manual users may provide their own costs, where appropriate, for a more accurate economic analysis.

3.3 LIGHTWEIGHT DECK REPLACEMENT

One of the more fundamental approaches to increase the live-load capacity of a bridge is to reduce its dead load. Significant reductions in dead load can be obtained by removing an existing concrete deck and replacing it with a lighter weight deck. In some cases, further reduction in dead load can be obtained by replacing the existing guardrail system with a lighter weight guardrail. The concept of strengthening by dead-load reduction has been used primarily on steel structures, including the following types of bridges: steel stringer and multibeam, steel girder and floor beam, steel truss, steel arch, and steel suspension bridges; however, this technique could also be used on bridges constructed of other materials.

Lightweight deck replacement is a feasible strengthening technique for bridges with structurally inadequate, but sound, steel stringers or floor beams. If, however, the existing deck is not in need of replacement or extensive repair, it is doubtful that lightweight deck replacement would be economically feasible.

Lightweight deck replacement can be used conveniently in conjunction with other strengthening techniques. After an existing deck has been removed, structural members can readily be strengthened, added, or replaced. Composite action, which is possible with some lightweight deck types, can further increase the live-load carrying capacity of a deficient bridge. The user is referred to the sections related to improving the strength of bridge members (Sec. 3.6), adding or replacing members (Sec. 3.7), and providing composite action (Sec. 3.4) for additional information.

3.3.1 Types of Lightweight Decks

Several types of lightweight decks are available, including steel grid, Exodermic, laminated timber, lightweight concrete, aluminum orthotropic plate, and steel orthotropic plate. Critical factors that directly affect the increase in capacity resulting from a lightweight deck replacement are the deck weight and the live-load distribution factor defined by AASHTO (*7*). Decision aids (Figs. 30 through 35) have been developed to show the relative increase in live-load capacity for each lightweight deck type (except aluminum and steel orthotropic plate deck). These graphs were based on deck replacement on a simple-span, steel-stringer bridge with an existing 8-in.-thick deck weighing 100 lb/sq ft. These values are approximate and are not intended to replace actual calculations; however, they do illustrate the relative increase in live-load capacity for each of the decks. The graphs also demonstrate that the benefit resulting from lightweight deck replacement becomes more significant for longer span bridges.

Based on calculated increases in live-load capacity, a bridge factor, B_f, was developed (see Eq. 4). The bridge factor represents the ordinate axis of the decision aids.

$$B_f = \frac{F_a \times S_m}{S \times L^2 \times 12} \tag{4}$$

B_f = bridge factor, lb/sq ft; F_a = allowable stress for the steel stringer, psi; S_m = section modulus of the stringer, in.^{3}; S = stringer spacing, ft; and L = span length, ft.

The following assumptions were made in the development of Figures 30 through 35:

1. Existing concrete deck weight of 100 lb/sq ft.
2. Assumed deck weights and live-load distribution factors for each of the lightweight decks as shown in Table 12.
3. HS20-44 loading.
4. Existing deck noncomposite.
5. Composite action not considered for the new deck.
6. Steel stringers not deteriorated.
7. Weight of the curb and guardrail equally distributed to all the stringers.

Graphs were developed for span lengths ranging from 30 ft to 80 ft, at 10-ft increments (see Figs. 30 through 35). The percent increase in live-load capacity for each deck (except open steel grid) has been shown in two ways: without a wearing surface and with a 20 lb/sq ft wearing surface. For some decks, a wearing surface is recommended by the manufacturer as a means of protecting the deck. Note, however, that in some cases a wearing surface may actually trap moisture and corrosive chlorides and thereby accelerate deck deterioration.

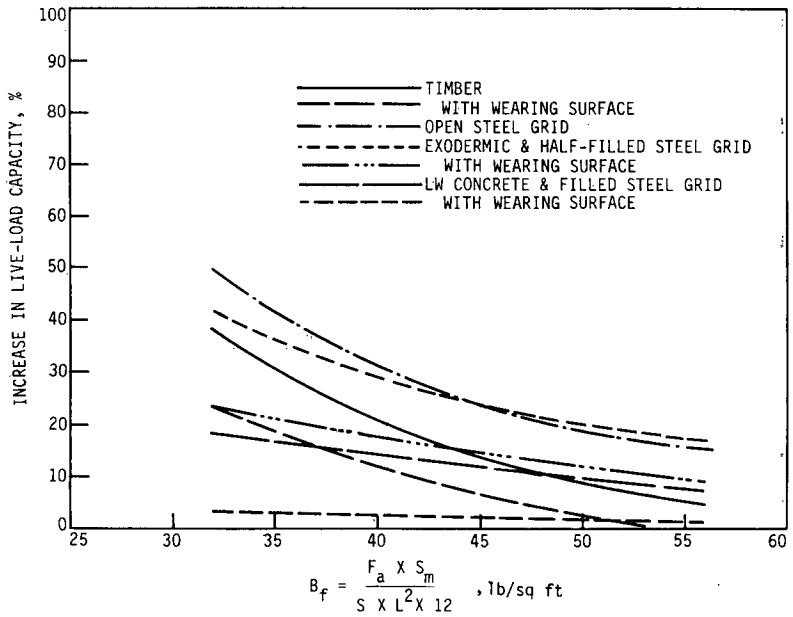

Figure 30. Lightweight deck replacement decision aid—span = 30 ft.

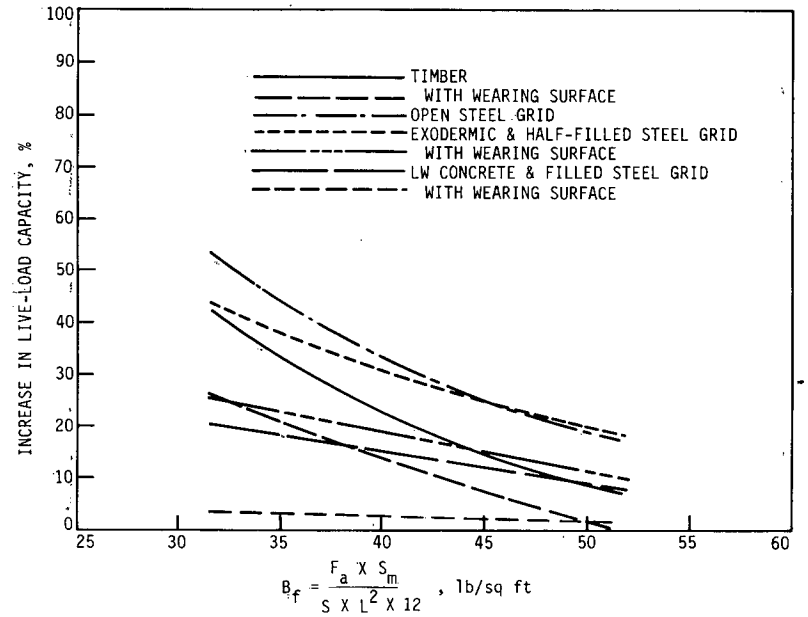

Figure 31. Lightweight deck replacement decision aid—span = 40 ft.

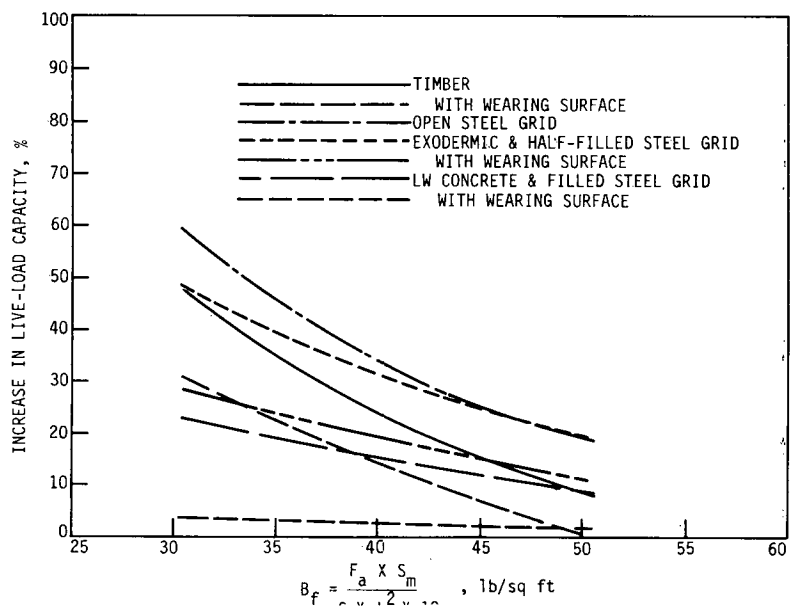

Figure 32. Lightweight deck replacement decision aid—span = 50 ft.

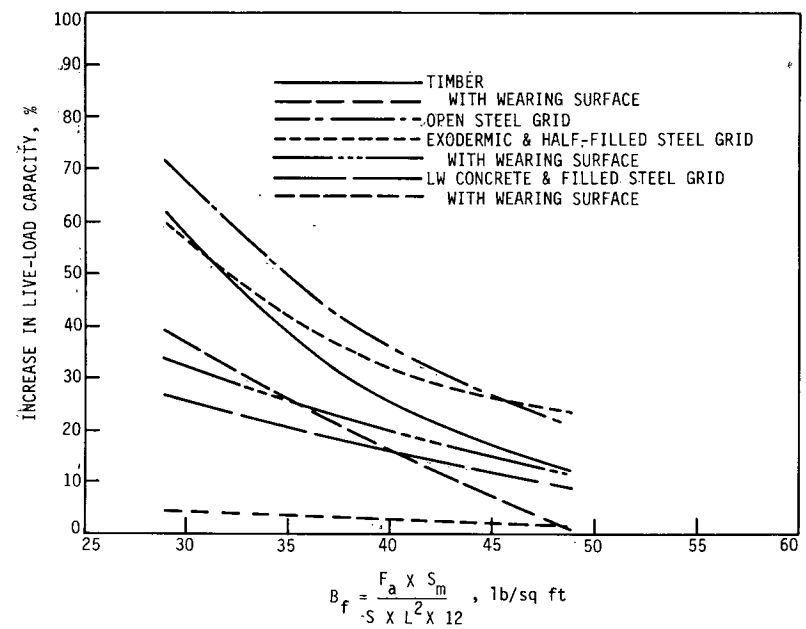

Figure 33. Lightweight deck replacement decision aid—span = 60 ft.

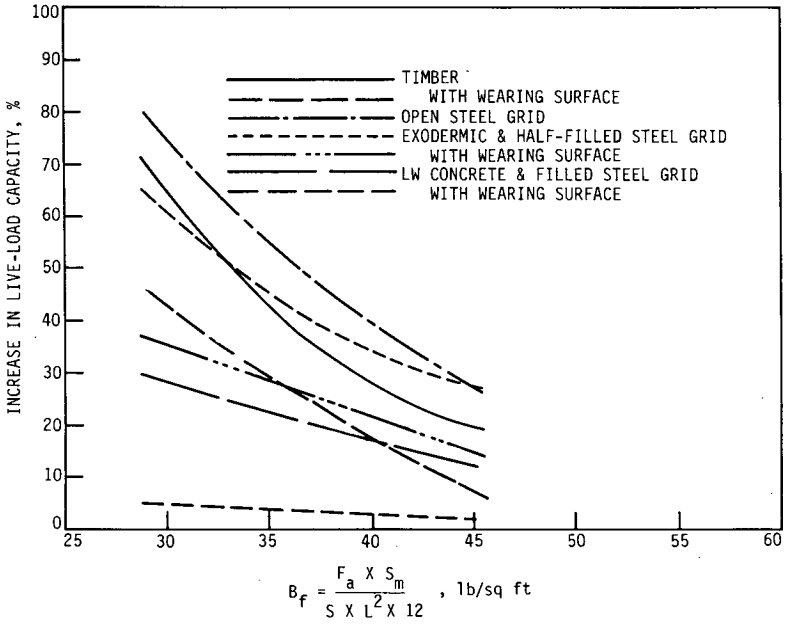

Figure 34. Lightweight deck replacement decision aid—span = 70 ft.

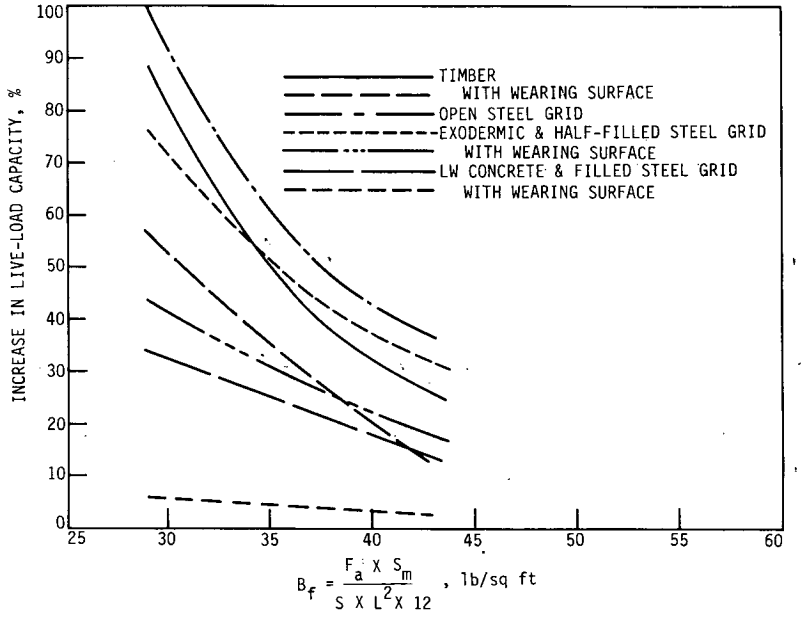

Figure 35. Lightweight deck replacement decision aid— span = 80 ft.

Table 12. Deck weights and live-load distribution factors* used in the development of decision aids.

Deck Type	Weight (lb/sq ft)	Weight Wearing Surface (lb/sq ft)	Distribution Factor*
Open Steel Grid	23	--	S/5
Half-filled Steel Grid	50	70	S/5.5
Filled Steel Grid	76	96	S/5.5
Exodermic	50	70	S/5.5
Transverse Timber	17	37	S/4.5
Lightweight Concrete	76	96	S/5.5

*Reference (4) AASHTO Standard Specifications for Highway Bridges.

Each of the lightweight deck types will be described briefly in the following paragraphs. Examples of applications of most of the deck types are presented in Section 2.3.1.

3.3.1.1 Steel Grid Deck

Steel grid deck is a lightweight flooring system manufactured by several firms. It consists of fabricated, steel-grid panels that are field welded or bolted to the bridge superstructure. In application, the steel grids may be filled with concrete, partially filled with concrete, or left open (see Fig. 36).

3.3.1.1.1 Open-grid steel decks. Open-grid steel decks are lightweight, typically weighing 15 to 25 lb/sq ft for spans up to 5 ft. Heavier decks, capable of spanning up to 9 ft, are also available. As can be seen from Figures 30 through 35, the percent increase in live-load capacity is maximized with the use of an open-grid steel deck. Rapid installation is possible with the prefabricated panels of steel grid deck. Open-grid steel decks also have the advantage of allowing snow, water, and dirt to wash through the bridge deck, thus eliminating the need for special drainage systems.

A disadvantage of the open grids is that they leave the superstructure exposed to weather and corrosive chemicals. The deck must be designed so water and debris do not become trapped in the grids that rest on the stringers. Other problems associated with open-steel grid decks include weld failure and poor skid resistance. Weld failures between the primary bearing bars of the deck and the supporting structure have caused maintenance problems with some open-grid decks. The number of weld failures can be minimized if the deck is properly erected. Shim plates should be used whenever the stringer elevations differ by more than ½ in., and all field welding should be done by qualified welders (*242*).

In an effort to improve skid resistance, most open-grid decks currently on the market have serrated or notched bars at the traffic surface. Small studs welded to the surface of the steel grids have also been used to improve skid resistance. While these features have improved skid resistance, they have not eliminated the problem entirely (*32*). Open-grid decks are often not perceived favorably by the general public because of the poor riding quality and increased tire noise.

3.3.1.1.2 Concrete-filled steel grid decks. Concrete-filled steel grid decks weigh substantially more, but have several advantages over the open-grid steel decks, including: increased strength, improved skid resistance, and better riding quality. The steel grids can be either half or completely filled with concrete. A 5-in. thick, half-filled steel grid weighs 46 to 51 lb/sq ft, less than half the weight of a reinforced concrete deck of comparable strength (*116*). Typical weights for 5-in.-thick steel grid decks, filled to full depth with concrete, range from 76 to 81 lb/sq ft. As can be seen in Figures 30 through 35, the reduction in the dead weight resulting from concrete-filled steel grid deck replacement alone only slightly improves the live-load capacity; however, the capacity can be further improved by providing composite action between the deck and stringers (see Sec. 3.4).

Steel grid panels that are filled or half-filled with concrete may either be precast prior to erection or filled with concrete after placement. With the precast system, only the grids that have been left open to allow field welding of the panels must be filled with concrete after installation. The precast system is generally used when erection time must be minimized.

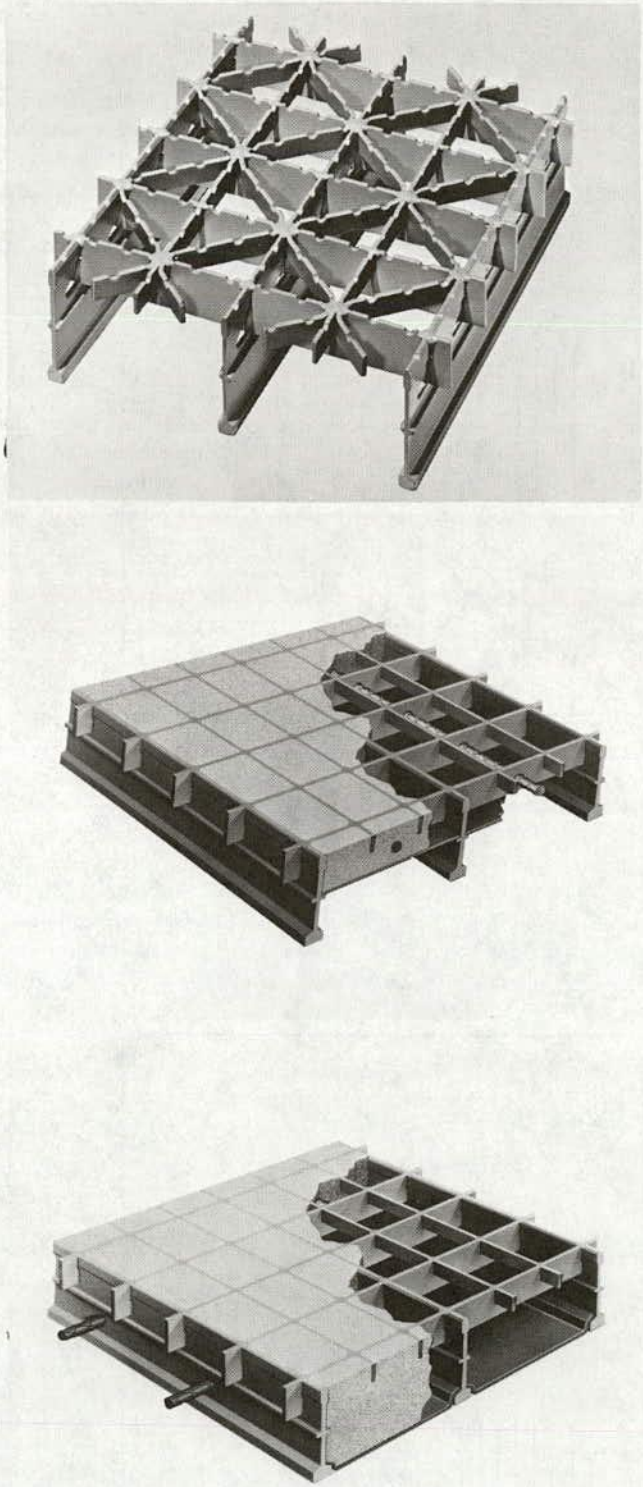

Figure 36. Steel-grid bridge deck. Top photo shows open steel grid deck; center photo shows half-filled steel grid deck; bottom photo shows filled steel grid deck.

A problem that has been associated with concrete-filled steel grid decks, addressed in a study by Timmer (*336*), is the phenomenon referred to as deck growth. Deck growth is defined as the increase in length of the filled grid deck caused by the

rusting of the steel I-bar webs. The increase in thickness of the webs due to rusting results in comprehensive stresses in the concrete fill. Timmer noted that in the early stages of deck growth, a point is reached when the compression of the concrete fill closes voids and capillaries in the concrete. Because of this action, the amount of moisture that reaches the rusting surfaces is reduced and deck growth is often slowed down or even halted. If, however, the deck growth continues beyond this stage, it can lead to breakup of the concrete fill, damage to the steel grid deck, and possibly even damage to the bridge superstructure and substructure.

Timmer's findings indicate that the condition of decks that had been covered with some type of wearing surface was superior to those that had been left unsurfaced. A wearing surface is also recommended to prevent wearing and eventual cupping of the concrete between the grids. Suggested wearing surfaces and their minimum thicknesses (*263*) include: latex modified concrete, 1 in.; asphalt, 1¾ in.; concrete overfill (integral pour), 1¾ in. minimum; and epoxy asphalt, ⅝ in. The wearing surface increases the dead weight of the deck, however, and results in a decrease in benefit from the lightweight deck replacement (see Figs. 30 through 35).

3.3.1.2 Exodermic Deck

Exodermic deck is a newly developed, prefabricated modular deck system that is currently being marketed by major steel-grid-deck manufacturers. The first application of Exodermic deck was in 1984 on the Driscoll Bridge located in New Jersey (*85*). As shown in Figure 37 the bridge deck system consists of a thin upper layer (3 in. minimum) of prefabricated concrete joined to a lower layer of steel grating. The deck weighs from 40 to 60 lb/sq ft and is capable of spanning up to 16 ft.

Exodermic decks have not exhibited the fatigue problems associated with open-grid decks or the growth problems associated with concrete-filled grid decks. As can be seen in Figure 37, there is no concrete fill against which grid corrosion can exert a force. This fact, coupled with the location of the neutral axis, minimizes the stress at the top surface of the grid.

Exodermic deck and half-filled steel grid deck (see Figs. 30 through 35) have the highest percent increase in live-load capacity among the lightweight deck types with a concrete surface. As a prefabricated modular deck system, Exodermic deck can be quickly installed. Because the panels are fabricated in a controlled environment, quality control is easier to maintain and panel fabrication is independent of the weather or season.

3.3.1.3 Laminated Timber Deck

Laminated timber decks consist of vertically laminated 2-in. (nominal) dimension lumber. The laminates are bonded together with a structural adhesive to form panels that are approximately 48-in. wide. The panels are typically oriented transverse to the supporting structure of the bridge (see Fig. 38). In the field, adjacent panels are secured to each other with steel dowels or stiffener beams to allow for load transfer and to provide continuity between the panels.

A steel-wood composite deck for longitudinally oriented laminates has been developed by Bakht and Tharmabala (*23*). Individual laminates are transversely post-tensioned in the manner developed by Csagoly and Taylor (*73*). The use of shear connectors provides partial composite action between the deck and stringers (see Sec. 3.4). Because the deck is placed longitudinally, diaphragms mounted flush with the stringers may be required for support. Design of this type of timber deck is presented in Refs. *330, 209,* and *208.*

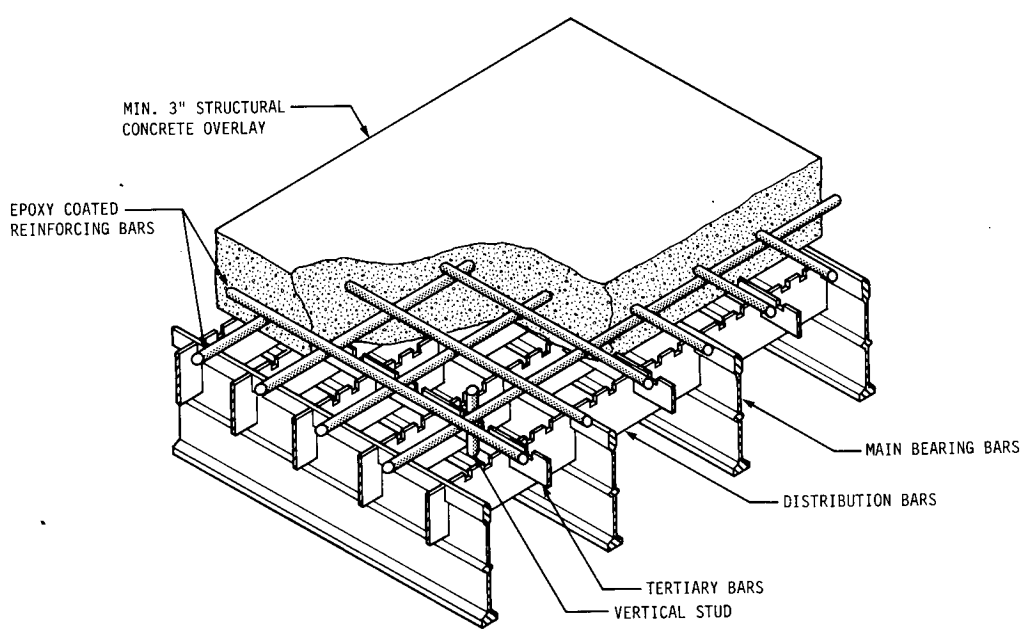

Figure 37. Exodermic deck system.

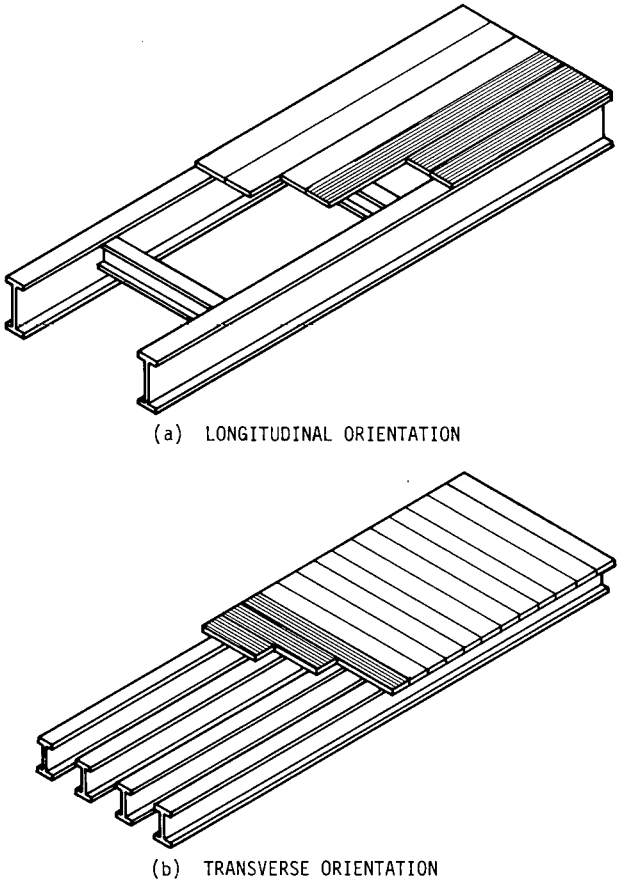

Figure 38. Laminated timber deck.

The laminated timber decks used for lightweight deck replacement typically range in depth from 3⅛ to 6¾ in. and from 10.4 to 22.5 lb/sq ft in weight. A bituminous wearing surface is recommended. The increase in live-load capacity shown in Figures 30 through 35 was calculated for a transversely oriented deck only.

Wood is a replenishable resource that offers several advantages: ease of fabrication and erection, high strength to weight ratio, and immunity to deicing chemicals. With the proper treatment, heavy timber members also have excellent thermal insulation and fire resistance (*219*). The most common problem associated with wood as a structural material is its susceptibility to decay caused by living fungi, wood boring insects, and marine organisms. With the use of modern preservative pressure treatments, however, the expected service life of timber decks can be extended to 50 years or more (*371*).

3.3.1.4 Lightweight Concrete Deck

Structural lightweight concrete can be used to strengthen steel bridges that have normal-weight, noncomposite concrete decks. Concrete is considered to be structural lightweight concrete if it has an air-dried unit weight of 115 lb/cu ft or less, approximately 25 percent lighter than normal-weight concrete. Special design considerations are necessary for lightweight concrete. Its modulus of elasticity and shear strength are less than that of normal-weight concrete, whereas its creep effects are greater (*190*). The durability of lightweight concrete has been a problem in some applications (see Sec. 2.3.1.3).

Lightweight concrete for deck replacement can be either cast in place or installed in the form of precast panels. A cast-in-place lightweight concrete deck can easily be made to act compositely with the stringers (see Sec. 3.4). The main disadvantage of a cast-in-place concrete deck is the length of time required for concrete placement and curing.

Lightweight precast panels, fabricated with either mild steel reinforcement or transverse prestressing, have been used in deck replacement projects to help to minimize erection time and resulting interruptions to traffic. Precast panels require careful installation to prevent water leakage and cracking at the panel joints. Panels must be erected so that no elevation differences exist from panel to panel. Composite action can be attained between the deck and the superstructure (see Sec. 3.4); however, some designers have chosen not to rely on composite action when designing a precast deck system.

3.3.1.5 Aluminum Orthotropic Plate Deck

Aluminum orthotropic deck is a structurally strong, lightweight deck weighing from 20 to 25 lb/sq ft. A proprietary aluminum orthotropic deck system that is currently being marketed is shown in Figure 39. The deck is fabricated from highly corrosion-resistant aluminum alloy plates and extrusions that are shop coated with a durable, skid-resistant, polymer wearing surface. Panel attachments between the deck and stringer must not only resist the upward forces on the panels, but also allow for the differing thermal movements of the aluminum and steel superstructure. For design purposes, the manufacturer's recommended connection should not be considered to provide composite action.

The aluminum orthotropic plate is comparable in weight to the open-grid steel deck. The aluminum system, however, eliminates some of the disadvantages associated with open grids: poor rideability and acoustics, weld failures, and corrosion caused by through drainage.

A wheel-load distribution factor has not been developed for the aluminum orthotropic plate deck at this time. Finite element

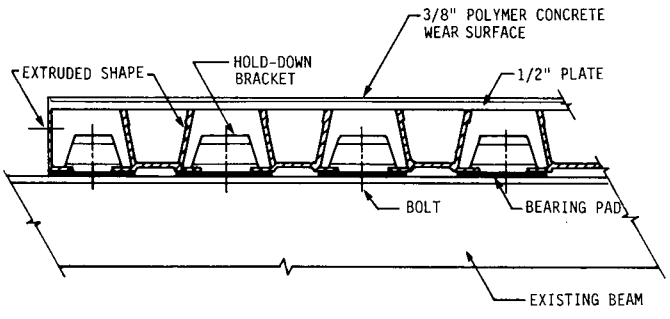

Figure 39. Aluminum orthotropic deck.

analysis has been used by the manufacturer to design the deck on a job-by-job basis. Because of this fact, the increased live-load capacity for the aluminum orthotropic plate deck has not been shown in Figures 30 through 35.

3.3.1.6 Steel Orthotropic Plate Deck

Although steel orthotropic plate decks are an alternative for lightweight deck replacements, it would be difficult to develop reliable design aids in a concise form. Steel orthotropic decks generally have been designed on a case-by-case basis, without a high degree of standardization. The decks often serve several functions in addition to carrying and distributing vertical live loads and, therefore, a simple reinforced concrete versus steel orthotropic deck weight comparison could be misleading.

Originally, steel orthotropic plate decks were developed to minimize steel use in 200- to 300-ft span girder bridges (*127*). Then the decks were used in longer span suspension and cable-stayed bridges where the deck weight is a significant part of the total superstructure design load. Although steel orthotropic deck is applicable for spans as short as 80 to 120 ft, it is unlikely that there would be sufficient weight savings at those spans to make it economical to replace a reinforced concrete deck with a steel orthotropic plate deck.

Orthotropic steel decks are heavier than aluminum orthotropic decks and usually have weights in the 45 to 130 lb/sq ft range. Because of the lack of standardization and the need for sophisticated structural analysis methods, the increased live-load capacity for steel orthotropic plate decks has been omitted from Figures 30 through 35.

3.3.2 Cost Information

The estimated costs associated with replacing an existing concrete deck with a new lightweight deck have been divided into the four following categories: (1) mobilization, (2) removal and disposal of the existing deck, (3) furnish and install the new deck, and (4) furnish and install a new guardrail.

Costs for each of the foregoing categories are given in Table 13. The costs for mobilization, deck removal and disposal, furnishing and installing the lightweight concrete cast-in-place and precast deck, and the concrete and aluminum guardrail were estimated by the Iowa DOT. Cost estimates for the other lightweight decks were provided by the respective manufacturers or an organization representing the manufacturers. The timber guardrail costs were provided by a timber deck manufacturer.

Table 13. Cost estimates for lightweight deck replacement.

Mobilization	$5,000 - $9,000 Lump Sum
Deck Removal and Disposal	$5 - $9 per sq ft
Furnish and Install New Deck	
Open Steel-Grid	$20 - $25 per sq ft
Half-filled Steel Grid	$17 - $20 per sq ft
Filled Steel Grid	$17 - $20 per sq ft
Exodermic	$23 - $28 per sq ft
Transverse Timber	$9 - $10 per sq ft
Lightweight Concrete	
Cast-in-Place	$13 - $20 per sq ft
Precast Panels	$20 - $25 per sq ft
Aluminum Orthotropic	Approx. $35 per sq ft
Furnish and Install Guardrail	
Concrete	$30 - $50 per lin ft
Aluminum	$25 - $30 per lin ft
Timber	$20 - $30 per lin ft

3.3.3 Design Procedure and Example

Procedure. To aid the user in the design of a lightweight deck replacement, the following design steps are suggested:

1. Calculate the initial stress ratio, R, for the bridge based on the existing deck weight and wheel-load distribution factor using Eq. 5.

$$R = \frac{M_a - M_{DL}}{M_{LLT}} \tag{5}$$

where R = stress ratio, M_a = allowable moment for the stringer, M_{DL} = dead-load moment carried by each stringer, and M_{LLT} = maximum moment caused by an HS20-44 truck.

2. If the decision aids apply (Figs. 30 through 35), use them to estimate the percent increase in live-load capacity and calculate the final stress ratio that results for each lightweight deck type.

3. Using Eq. 5, calculate the final stress ratio based on the new deck weight and wheel-load distribution factor.

4. If the final stress ratio is greater than or equal to one, the bridge meets or exceeds the design requirements. If not, other strengthening techniques such as composite action or the modification, replacement, or addition of structural members may need to be used in conjunction with lightweight deck replacement.

Design Example. A 60-ft simple-span steel-stringer bridge originally designed for H15-44 loading needs to be strengthened to HS20-44 loading. Lightweight deck replacement will be considered as a method of increasing the live-load capacity of the bridge. The existing bridge has a 24-ft-wide two-lane roadway. The existing deck weighs 100 lb/sq ft. The steel superstructure, fabricated from ASTM A33 steel, consists of four W36 × 150 (Section modulus = 504 in.^{3}) stringers spaced at 7 ft 4 in. on center.

1. If one assumes that the allowable steel stress is equal to 18,000 psi, the total allowable moment for the stringers can be calculated:

$$M_a = S_m \times F_a = \frac{504 \text{ in.}^3 \times 18{,}000 \text{ psi}}{12} = 756{,}000 \text{ ft-lb}$$

where M_a = allowable moment, S_m = section modulus, and F_a = allowable steel stress.

2. Calculate the dead-load moment for the existing bridge:

Dead load on each stringer:

Deck	7.33 ft × 100 lb/sq ft	= 733 lb/ft
Stringer beam		= 150 lb/ft
Miscellaneous framing and connections		= 10 lb/ft
Curb & guardrail	$\frac{350 \text{ lb/ft} \times 2}{4}$	= 175 lb/ft
	Total	1,068 lb/ft

Dead-load moment:

$$M_{DL} = \frac{w \times L^2}{8} = \frac{1{,}068 \text{ lb/ft} \times (60 \text{ ft})^2}{8} = 480{,}600 \text{ ft-lb}$$

M_{DL} = dead-load moment
w = dead weight/ft
L = span length

3. Calculate the maximum live-load moment for HS20-44 loading. From AASHTO Appendix A (*4*), the maximum live-load moment for a 60-ft simple span bridge with HS20-44 loading is 806,500 ft-lb/axle load, which is equivalent to 403,250 ft-lb/wheel line.

4. Using the AASHTO impact formula (*4*), calculate the impact factor:

$$I = \frac{50}{L + 125} = \frac{50}{60 \text{ ft} + 125} = 0.27 \leq 0.30 \therefore I = 0.27$$

where I = impact fraction (maximum 0.30), and L = span length (ft).

5. Using AASHTO wheel load distribution equations (*4*), calculate the distribution factor for the existing concrete deck:

$$D_f = \frac{S}{5.5} = \frac{7.33 \text{ ft}}{5.5} = 1.33/\text{wheel line}$$

where D_f = distribution factor, and S = average stringer spacing.

6. Calculate the maximum live-load moment, M_{LLT}, for each stringer:

$$M_{LLT} = 403{,}250 \text{ ft-lb/wheel line} \times 1.27 \times 1.33 = 682{,}526 \text{ ft-lb}$$

7. Using Eq. 5, calculate the initial stress ratio, R, for the existing bridge:

$$R = \frac{M_a - M_{DL}}{M_{LLT}} = \frac{756{,}000 \text{ ft-lb} - 480{,}600 \text{ft-lb}}{682{,}526 \text{ ft-lb}} = 0.404$$

The decision aid for a 60 ft-ft-long bridge can be used to approximate the increased live-load carrying capacity that results from replacing the existing deck with each of the lightweight decks. First, calculate the bridge factor, B_f, using Eq. 4:

$$B_f = \frac{F_a \times S_m}{S \times L^2 \times 12} = \frac{18{,}000 \text{ psi} \times 540 \text{ in.}^3}{7.33 \text{ ft} \times (60 \text{ ft})^2 \times 12 \text{ in./ft}} = 30.70 \text{ lb/sq ft}$$

Table 14. Estimated percent increase in live-load capacity and final stress ratios for lightweight deck replacement on the example bridge.

Deck Type	Approximate Increase in Live-Load Capacity (%)	Approximate Final Stress Ratio	Calculated Final Stress Ratio
Open Steel Grid	66	0.67	0.71
Half-Filled Steel Grid	55	0.63	0.66
Filled Steel Grid	25	0.51	0.51
Exodermic	55	0.63	0.66
Laminated Timber	55	0.63	0.66
Lightweight Concrete	25	0.51	0.51

From Figure 33, the percent improvement in the live-load carrying capacity and final stress ratio can be estimated for each of the lightweight decks. The approximate values for the percent increase in live-load capacity and the final stress ratio determined from the decision aids are given in Table 14. Also given in Table 14 are the calculated values for the final stress ratio.

It should be noted that the decision aids are to be used to obtain approximate results only. Actual design calculations, similar to the calculation for the initial stress ratio shown earlier, should be made to verify the final stress ratios.

Since the final stress ratios for all of the lightweight decks are less than one, lightweight deck replacement, when used alone, cannot bring the bridge up to an HS20-44 rating. Lightweight deck replacement can conveniently be used with several other strengthening techniques, to obtain an HS20-44 rating for the bridge used in this example.

3.3.4 Summary

Each type of lightweight deck discussed in these guidelines has the ability to increase the live-load carrying capacity of an existing bridge by reducing the dead load of the deck. In addition, some of the decks can be made to act compositely with the structural members to further improve the load-carrying capacity of a bridge. Lightweight deck replacement can conveniently be used in conjunction with many other strengthening techniques described in this manual. When selecting a lightweight deck for a particular application, consideration should be given to the increased live-load capacity that each deck allows, the durability of the deck, the ease of installation, the maintenance requirements, and the initial cost of the lightweight deck.

3.4 PROVIDING COMPOSITE ACTION BETWEEN BRIDGE DECK AND STRINGER

3.4.1 Description

Modification of an existing stringer and deck system to a composite system is a common method of increasing the flexural strength of a bridge. The composite action of the stringer and deck not only reduces the live-load stresses but also reduces deflections as a result of the increase in the moment of inertia

from the stringer and deck acting together. This procedure can also be used on bridges that only have partial composite action, because the shear connectors originally provided are inadequate to support today's live loads.

The composite action previously discussed is provided through suitable shear connection between the stringers and the roadway deck. Although numerous devices have been used to provide the required horizontal shear resistance, the most common connection used today is the welded stud. More information on the various types of shear connection that have been used in the past and those that are in use today will be provided in Section 3.4.3.

3.4.2 Applicability and Advantages

Inasmuch as the modifications required for providing composite action for continuous spans and simple spans are essentially the same, this section is written for simple spans. Design considerations that apply specifically to continuous spans are presented in Section 3.4.5.

Composite action can effectively be developed between steel stringers and various deck materials, such as normal-weight reinforced concrete (precast or cast-in-place), lightweight reinforced concrete (precast or cast-in-place), laminated timber, and concrete-filled steel grids. These are the most common materials used in composite decks; however, there are some instances in which steel deck plates have been made composite with steel stringers. In the following paragraphs these four common deck materials will be discussed individually.

Because steel stringers are normally used for support of all the mentioned decks, they are the only type of superstructure reviewed. The condition of the deck determines how one can obtain composite action between the stringers and an existing concrete deck. If the deck is badly deteriorated, composite action is obtained by removing the existing deck, adding appropriate shear connectors to the stringers, and recasting the deck. This was done in Blue Island, Illinois, on the 1,500-ft-long steel-plate girder, called the Burr Oak Avenue Viaduct (*46*). The addition of the composite action not only increased the live-load carrying capacity but also reduced undesirable live-load deflection and vibrations.

If it is desired to reduce interruption of traffic, precast concrete panels are one of the better solutions. The panels are made composite by positioning holes formed in the precast concrete directly over the structural steel. Welded studs are then attached through the preformed holes. This procedure was used on an I-80 freeway overpass near Oakland, California (*67*). As shown in Figure 40, panels 30 ft to 40 ft long, with oblong holes 12 in. × 4 in. were used to replace the existing deck. Four studs were welded to the girders through each hole. Individual panels were leveled by using four bolts precast in the panels. Composite action was obtained by filling the holes, as well as the gaps between the panels and steel stringers, with fast-setting concrete.

If the concrete deck does not need replacing, composite action can be obtained by coring through the existing concrete deck to the steel superstructure. Appropriate shear connectors are placed in the holes; the desired composite action is then obtained by filling the holes with nonshrink grout. This procedure was used in the reconstruction of the Pulaski Skyway near the Holland Tunnel linking New Jersey and New York (*67*). After removing an asphalt overlay and some of the old concrete, the

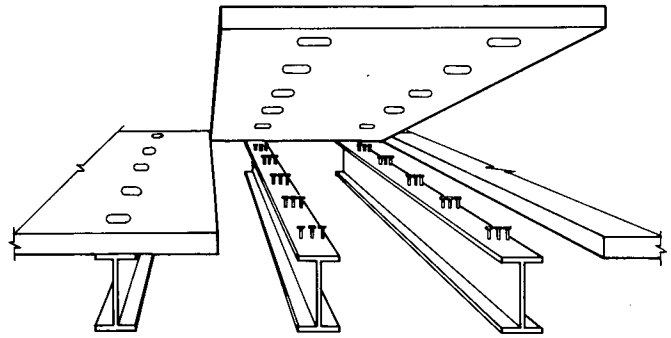

NOTE: SHEAR STUDS SHOWN ARE ACTUALLY ADDED AFTER PRECAST DECK IS POSITIONED.

Figure 40. Precast deck with holes.

previously described procedure with welded studs placed in the holes was used. The holes were then grouted and the bridge resurfaced with late modified concrete. For information on selection of appropriate shear connectors, see Section 3.4.3.

Structural lightweight concrete (unit weight of 115 lb/cu ft or less) has been used in both precast panels and in cast-in-place bridge decks; for additional information on these types of decks see Section 3.3.1.4. Comments made on normal-weight concrete in the preceding paragraphs essentially apply to lightweight concrete also. However, since the shear strength, fatigue strength, and modulus of elasticity of lightweight concrete are less than that of normal-weight concrete, these lesser values must be taken into account in design.

Partial composite action can also be obtained between a timber deck and its support stringers. Bakht and Tharmabala (*23*)have demonstrated that it is possible to obtain partial composite action between steel stringers and longitudinally oriented laminated timber panels. In addition to static tests on various components of the bridge, tests were also conducted on a half-scale model bridge. Details on the shear connection developed in their investigation are given in Section 3.4.3.

Steel grid decks are lightweight flooring systems manufactured by several firms. The decks consist of fabricated steel-grid panels that are field welded or bolted to the bridge superstructure. In application, the steel grids may be filled with concrete, partially filled with concrete, or left open. Further information on this type of deck is given in Section 3.3.1.1. Steel grid decks that are filled or partially filled with concrete can be made to act compositely with the superstructure by adding appropriate shear connections.

The advantages of composite action can be seen in Figure 41. Shown in this graph is the decrease in the top flange stress as a result of providing composite action on a simple supported single-span bridge with steel stringers and an 8-in. concrete deck. As may be seen in this figure, two stringer spacings (6 ft and 8 ft) are held constant, while the span length was varied from 20 ft up to 70 ft. These stresses are based on the maximum moment that results from either the standard truck loading (HS20-44) or the standard lane loading, whichever governs. Although not included, similar stress variations were plotted for the concrete and bottom steel flange. Concrete stresses were considerably below the allowable stress limit; composite action

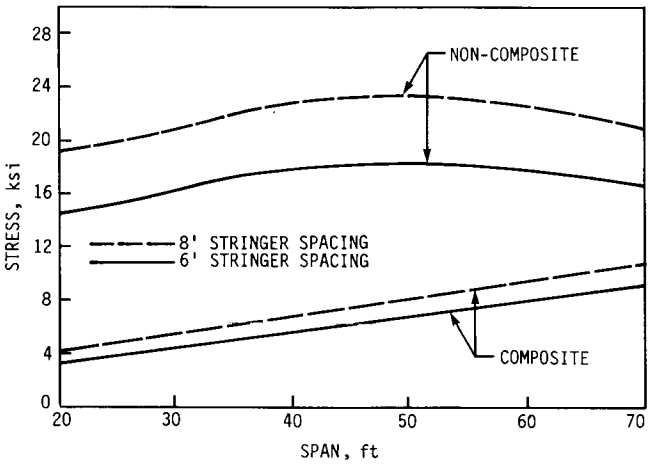

Figure 41. Stress in top flange of stringer, composite action vs. noncomposite action.

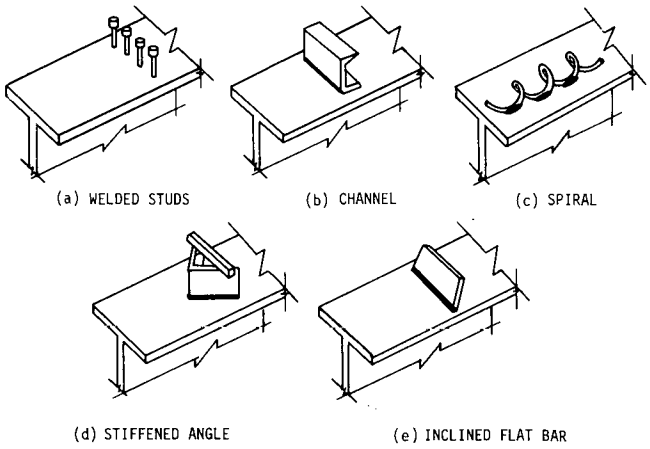

Figure 42. Common shear connectors.

reduced the stress in the bottom flange 15 percent to 30 percent for long and short spans, respectively. As may be seen in Figure 41 for a 40-ft span with 8-ft stringer spacing, composite action will reduce the stress in the top flange 68 percent (22 ksi to 7 ksi). Two other conclusions may also be made by reviewing Figure 41: composite action is slightly more beneficial in short spans than in long spans, and the larger the stringer spacings the more stress reduction when composite action is added. Results for other types of deck are similar but will depend on the type and size of deck, amount of composite action obtained, type of support system, and the like. Although it is assumed that most users of this manual are familiar with composite design, for review one can refer to Refs. *127, 70,* and *39.* Reference *341, Highway Structures Design Handbook,* presents a preliminary design procedure that is especially useful.

3.4.3 Shear Connectors

As previously mentioned, in order to create composite action between the steel stringers and bridge deck some type of shear connector is required. In the past, several different types of shear connectors were used in the field; these connectors can be seen in Figure 42. Of these, because of the advancements and ease in application, welded studs have become the most commonly used shear connector today. In the strengthening of an existing bridge, frequently one of the older types of shear connectors will be encountered. In order to ensure that the shear connectors present are adequate, a strength evaluation must be undertaken. The following references can be used to obtain the ultimate strength of various types of shear connectors. A method for calculating the strength of a flat bar can be found in Cook (*70*); also, work done by Klaiber et al. (*159*) can be used in evaluating the strength of stiffened angles. Older AASHTO standard specifications can be used to obtain ultimate strength of shear connectors; for example, values for spirals can be found in the AASHTO standard specifications from 1957 to 1968. The current manual (*4*) gives only ultimate strength equations for welded studs and channels; thus, if shear connectors other than these two are encountered, the previously mentioned references should be consulted.

The procedure employed for using high-strength bolts as shear connectors (see Fig. 43) is very similar to that used for utilizing welded studs in existing concrete, except for the required holes in the steel stringer. To minimize slip, the hole in the steel stringer is made the same size as the diameter of the bolt. Dedic and Klaiber (*82*) and Dallam (*76,77*) have shown that the strength and stiffness of high-strength bolts are essentially the same as those of welded shear studs. Thus, existing AASHTO, ultimate-strength formulas for welded stud connectors (*4*) can be used to estimate the ultimate capacity of high-strength bolts.

3.4.4 General Cost Information

General cost information for creating composite action was obtained from estimates provided by the Iowa DOT. The assumptions that were used in these estimates are described in Section 3.2.3.8. Other variables used in obtaining these estimates include: (1) bridge length (30 ft, 60 ft, 120 ft); (2) amount of

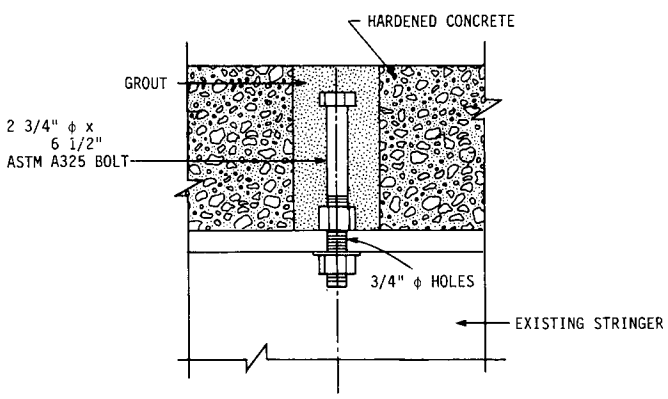

Figure 43. Details of double-nutted high-strength bolt shear connector.

deck removed (whole deck and curb, cores where shear connectors required); and (3) welded studs.

The results in Table 15 can be used in the economics analysis presented in Section 3.2, so that this method of strengthening can be compared to other strengthening alternatives.

Table 15. Cost estimates for creating composite action.

	Remove Whole Deck		Remove Only Cores	
Bid Item	Quantity	Bid Price	Quantity	Bid Price
30-ft Bridge				
Mobilization	L.S.*	$6,000	L.S.	$5,000
Removal	27 cu yd	$260/cu yd	232 cores	$15/core
Welding studs	232 studs	$10/stud	232 studs	$11/stud
Replace concrete	27 cu yd	$600/cu yd	232 cores	$5/core
60-ft Bridge				
Mobilization	L.S.	$8,000	L.S.	$5,000
Removal	54 cu yd	$210/cu yd	232 cores	$15/core
Welding studs	232 studs	$10/stud	232 studs	$11/stud
Replace concrete	54 cu yd	$510/cu yd	232 cores	$5/core
120-ft Bridge				
Mobilization	L.S.	$9,500	L.S.	$5,000
Removal	108 cu yd	$150/cu yd	232 cores	$15/core
Welding studs	232 studs	$10/stud	232 cores	$11/core
Replace concrete	108 cu yd	$390/cu yd	232 cores	$5/core

*Lump sum.

3.4.5 Design Considerations

The means of obtaining composite action will depend on the individual bridge deck. If the deck is in poor condition and needs to be replaced, the following variables should be considered: (1) weldability of steel stringers, (2) type of shear connector, and (3) precast versus cast in place.

To determine the weldability of the shear connector, the type of steel in the stringers must be known. If the type of steel is unknown, coupons may be taken from the stringers to determine their weldability. If it is found that welding is not possible, essentially the only alternative for shear connection is high-strength bolts (see Sec. 3.4.3). Although the procedure is rarely done, bolts could be used to attach channels to the stringers for shear connection. When welding is feasible, either welded studs or channels can be used. Because of the ease of application of the welded studs, channels are rarely used today. In older constructions where steel cover plates were riveted to the beam flanges, an option that may be available is to remove the rivets connecting the top cover plate to the top flange of the beam and replace the rivets with high-strength bolts in a manner similar to that which is shown in Figure 43.

According to the current AASHTO manual, *Standard Specifications for Highway Bridges* (*4*), in new bridges shear connectors should be designed for fatigue and checked for ultimate strength. However, in older bridges, the remaining fatigue life of the bridge will be considerably less than that of the new shear connectors; thus, one only needs to design the new shear connectors for ultimate strength. If an existing bridge with composite action requires additional shear connectors, the ultimate strength capacity of the original shear connector (connector #1) and new shear connectors (connectors #2) can simply be added even though they are different types of connectors. Variation in the stiffness of the new shear connectors and original shear connectors will have essentially no effect on the bridge's elastic behavior and nominal effect on the ultimate strength (*90*).

The most common method of creating composite action when one works with precast concrete decks is to preform slots in the individual panels. These slots are then aligned with the stringers for later placement of shear connectors (see Fig. 40). Once shear connectors are in place, the holes are filled with nonshrink concrete. A similar procedure can be used with laminated timber except the holes for the shear connectors are drilled after the panels are placed.

When it is necessary to strengthen a continuous span, composite action may still be employed. According to the 1983 AASHTO standards (*4*), the positive moment region may be designed using the same procedure as that for simple-span bridges. When designing the negative moment region, the engineer has two alternatives. The engineer may continue the shear connectors over the negative moment region, in which case the longitudinal steel may be used in computing section properties in the negative moment region. The amount of longitudinal reinforcing steel required in the negative moment region must be at least 1 percent of the cross-sectional area of the deck with two-thirds of this steel placed in the top layer of the deck within the effective width. The other alternative is to discontinue the shear connectors over the negative moment region. As long as the additional anchorage connectors in the region of the point of dead load contraflexure are provided, as required by the code, continuous shear connectors are not needed. When this second alternative is used, the engineer may not use the longitudinal steel in computing the section properties in the negative moment region. The longitudinal steel provided in the negative moment region must be extended into the positive moment region by at least 40 times the diameter of the reinforcing bars. If shear connectors are continued over the negative moment region, one should check to be sure that the longitudinal steel is not overstressed.

3.4.6 Summary

Composite action can be used to increase the flexural strength of a bridge by modifying the existing stringers so that the stringers act with the deck. The amount of increase in flexural strength depends on the length of bridge as well as the type of deck. A typical range of values for the percentage of reduction of flexural stress is between 15 percent and 30 percent for a bridge with a concrete deck. Other types of decks where composite action can be used include lightweight concrete, timber, and concrete-filled steel grid. In order to create composite action between the steel stringers and bridge deck, some type of shear connector is required between the two (see Fig. 42). The most common type of shear connector used today is the welded stud. Installation of the shear connectors is dependent on the deck condition. If the deck is badly deteriorated, composite action can be obtained simply by adding shear connectors to the stringers when the deck is removed; otherwise, the connectors must be applied through the deck by using some type of boring device to gain access to the stringers through the deck. Composite action has been used to increase bridge strength in examples found in Refs. *46, 67,* and *23.* Because of composite action's reliability, it has

become one of the most commonly used methods of bridge strengthening.

3.5 INCREASING TRANSVERSE STIFFNESS OF BRIDGE

3.5.1 Description

In the United States simple-span steel-stringer bridges are usually analyzed and designed as determinate structures. The indeterminacy caused by the transverse stiffness of the deck diaphragms and cross frames is taken into account through the use of the simple wheel-load fractions published in the AASHTO bridge design specifications (*4*). In reality, however, a simple-span stringer bridge is indeterminate because modifications in the longitudinal stiffness, transverse stiffness, and/or plan geometry of the bridge will affect live-load distribution.

The transverse stiffness of a bridge in need of strengthening can be approached with several objectives. One simple objective is to accurately analyze the bridge to account for transverse stiffness, which is present but not included in the AASHTO wheel load fractions. If the more accurate analysis does not show the bridge to be of sufficient strength or if the bridge has an obvious transverse weakness, another objective is to add cross members to improve transverse stiffness. Increasing transverse stiffness can distribute live loads away from the overloaded stringers in order to more effectively utilize the total longitudinal strength of the bridge.

3.5.2 Applicability and Advantages

Increasing transverse stiffness is applicable only as a secondary method for strengthening a bridge. The effect of transverse stiffening does not exceed 30 percent in practical cases and may be negligible in some cases. In order to demonstrate the effects of transverse stiffening on short-span bridges, series of computations were performed for typical two-lane and three-lane bridges.

The typical bridges were selected from the FHWA's standard bridge plans for noncomposite steel stringer bridges (*344*). The bridges vary in span from 20 ft to 70 ft in 10-ft intervals, have an 8-in.-thick deck, and are designed for HS20-44 loading. For the two-lane bridge experiments, a minimum-width 28-ft roadway was chosen, for which the bridges have four wide-flange steel stringers spaced 8 ft on center. Any longitudinal stiffening effects on guardrails and concrete curbs were neglected, so that the bridges are assumed not to have stiffened edges. Transverse stiffening effects of steel diaphragms, which would be small, were also neglected so that the transverse stiffness of the bridges depends only on the deck.

The basic series of bridges described above was defined as Case A. Case B was then developed to demonstrate the effects of transverse stiffening. The transverse stiffness of the Case B bridges was arbitrarily increased to half of the longitudinal stiffness. This stiffening could be achieved by means of reinforced concrete or steel cross beams spaced 8 ft to 16 ft apart. Because cross frames are not as effective as cross beams (*61*), especially for relatively shallow stringers, cross frames need to be spaced much less than 8 ft to 16 ft in order to achieve the same amount of transverse stiffening. Both Case A and Case B bridges represent bridges that would be adequate by current standards.

For comparison purposes, Case C and Case D bridges were developed to demonstrate the effects of transverse stiffening on bridges that are understrength. Case C bridges had the same geometry and properties as Case A bridges, except that the steel stringers were reduced in size so as to be adequate only for H15-44 loading. Case D bridges are Case C bridges that have been transversely stiffened to half of the longitudinal stiffnesses.

All bridges were analyzed for load distribution by means of the method presented by Bakht and Jaeger (*22*). This orthotropic plate based method meets AASHTO requirements for a more accurate analysis, is quite easy to use, and accounts for the effects of longitudinal and transverse stiffnesses. Results of the analyses are shown in Figure 44 for exterior stringers and in Figure 45 for interior stringers.

In Figure 44, the horizontal line at the value of one represents the constant AASHTO wheel-load fraction $S/(4.0 + 0.25S)$, where S is the stringer spacing—8 ft in this case. All of the wheel-load fractions computed by the method based on orthotropic plate theory are less than the AASHTO fraction, because the Case A through Case D curves are not greater than one. The figure shows little difference between Cases A and C and between Cases B and D. The beneficial effect of the transverse stiffening is about 1 percent for the 20-ft span bridges and increases to about 5 percent for the 70-ft span bridges.

The horizontal line at the value of one in Figure 45 represents the constant AASHTO wheel-load fraction for interior stringers of $S/5.5$, where S is the 8-ft stringer spacing. Except for the 20-ft span, the AASHTO fraction is conservative for the four cases in the figure. For an interior stringer, there are differences between Cases A and C and between Cases B and D, and there are generally more variations in load fractions with change in span. Beneficial effects of transverse stiffening range from 5 percent for a 20-ft span bridge to 8 percent for a 70-ft span bridge.

The two-lane bridges considered up to this point are relatively narrow, and it could be argued that they are not as likely to benefit from transverse stiffening as wider bridges. Four series of three-lane bridges with 44-ft roadway widths based on the FHWA's standard plans (*344*) were examined. All of the bridges in the series have six stringers spaced at 8 ft. The Case E series again is for HS20-44 bridges, Case F is for transversely stiffened Case E bridges, Case G is for H15-44 bridges, and Case H is for transversely stiffened Case G bridges.

The analysis results shown in Figure 46 are very similar to the results illustrated in Figure 44 for two-lane bridges. The results plotted in Figure 47, however, show more variation from those plotted in Figure 45. Most of the wheel-load fractions computed by the Bakht-Jaeger method for unstiffened bridges exceed the AASHTO interior stringer fraction. The fact that the computed wheel-load fractions exceed the AASHTO fraction indicates that the AASHTO fractions are unconservative for those cases. The transverse stiffening does have more effect for three-lane bridges. The beneficial effects of transverse stiffening range from 3 percent to 15 percent.

Increasing the transverse stiffness of a steel-stringer bridge can reduce live-load stresses in stringers by as much as 15 percent. Maximum reductions occur for interior stringers in wider and in longer span bridges. If all stringers are of the same size, the relatively minimal benefit for exterior stringers may

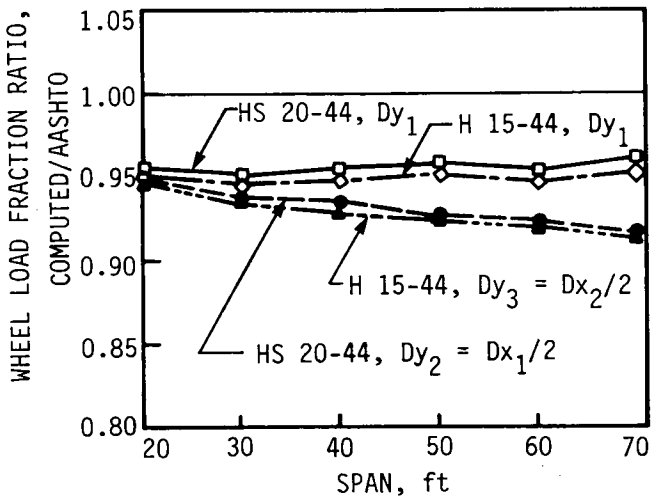

Figure 44. Effect of transverse stiffening on exterior stringers for two-lane bridges, 28-ft roadway.

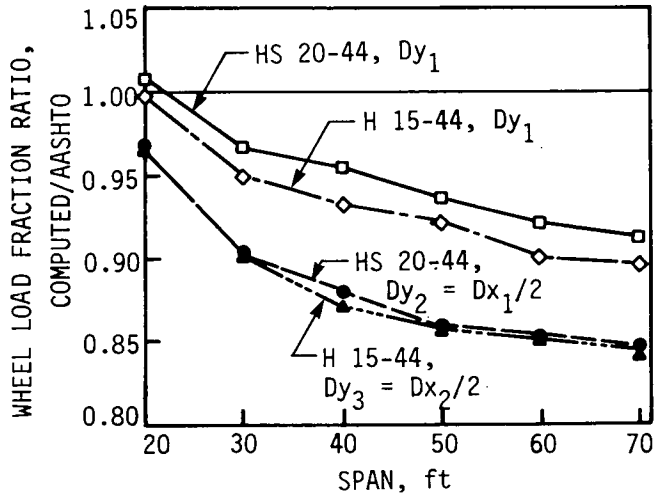

Figure 45. Effect of transverse stiffening on interior stringers for two-lane bridges, 28-ft roadway.

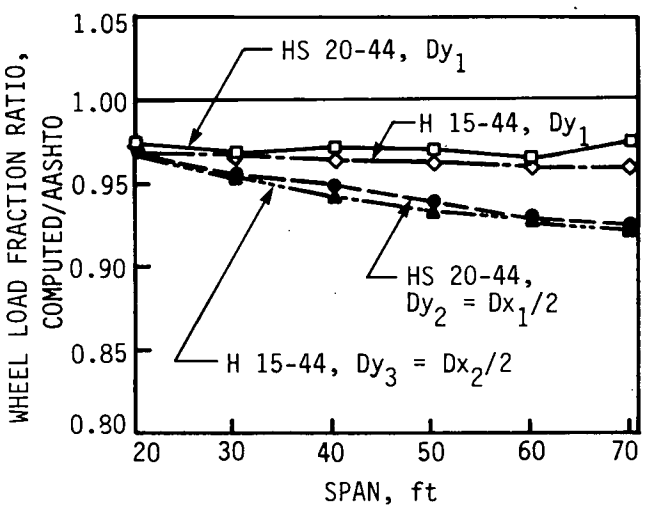

Figure 46. Effect of transverse stiffening on exterior stringer for three-lane bridges, 44-ft roadway.

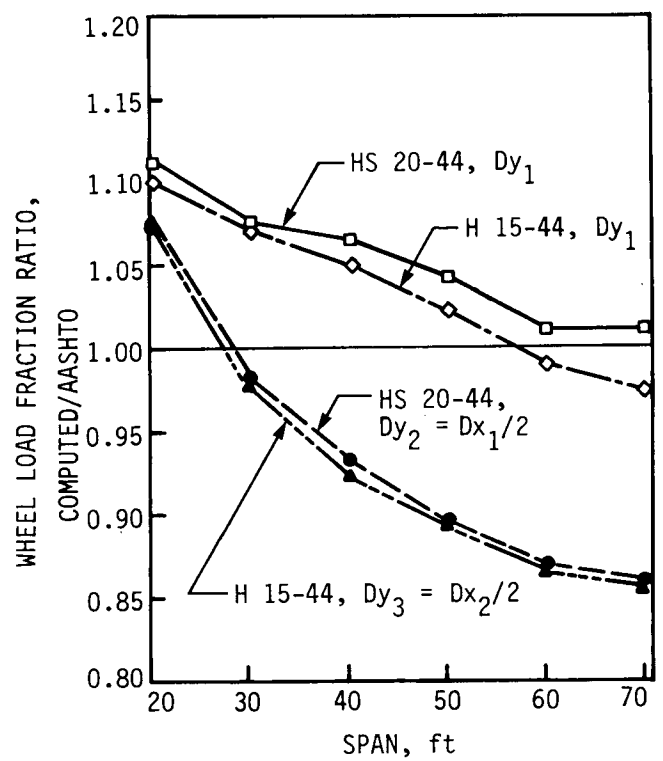

Figure 47. Effect of transverse stiffening on interior stringers for three-lane bridges, 44-ft roadway.

not be a limiting factor, because the exterior stringers usually were oversized in the original design.

The studies for two-lane and three-lane bridges also show that more accurate computations of wheel-load fractions for exterior stringers may decrease design live-load moments 3 percent to 5 percent without transverse stiffening. For interior stringers, more accurate computations may increase or decrease live-load moments by as much as 10 percent without transverse stiffening.

3.5.3 Limitations and Disadvantages

Because many bridge systems benefit from a more exact method of calculating lateral, live-load distribution, this method can be used in virtually every bridge type. The major disadvantage is that, in order to determine the benefits of transverse stiffness, more involved analytical methods are required. One of the simpler procedures for including the effects of lateral stiffness on load distribution has been presented by Bakht and Jaeger (*22*). However, if this simplified analysis method does not apply, a more complex method such as finite element analysis, grillage analysis, or the like must be used. The more involved analysis obviously will require a greater expertise and be more time consuming.

Actually increasing the transverse stiffness of a stringer bridge can be quite expensive, depending on the type of bridge and method used for the transverse stiffening. The example given below for cross frames for a short-span steel-stringer bridge illustrates the potential expense. The cross frames also do not provide as much increase in transverse stiffness as used in the computational studies given earlier.

3.5.4 General Cost Information

General cost information for increasing transverse stiffness through the use of steel cross bracing was obtained from an estimate provided by the Iowa DOT. The assumptions used in this estimate are described in Section 3.2.3.8. Other assumptions used in obtaining this estimate include the following: (1) a bracing configuration similar to that in Figure 48 was used. (2) Nine such bracings were used on a 4-stringer, 30-ft bridge. (3) Deck was not removed; bracing was installed from below the bridge.

The total cost for addition of all nine cross frames was $14,250, which includes mobilization, steel used in bracing, and cost of installation. Thus, the value that should be used for this method in Section 3.2 ranges from $16 to $18/sq ft of bridge deck.

3.5.5 Design Procedures

The major concern in modifying transverse load distribution is the method to provide the required increase in transverse stiffness. There are two proven methods of increasing a bridge's transverse stiffness. They include transverse beams or cross frames for steel stringers and transverse post-tensioning for laminated timber decks. Each of these methods will be briefly discussed in the following paragraphs.

When a steel-stringer bridge is to be strengthened by this method, the engineer must select the type of stiffening to provide either cross beams or cross frames. One method of adding a cross beam is given in Ref. *32*. The Iowa DOT also has used cast-in-place reinforced concrete beams along with deck replacement to add transverse stiffness. An example of a cross frame is shown in Figure 48. It consists of structural angles and plates that are attached to the stringers by bolts and/or welds. This arrangement of angles and plates increases the transverse load distribution with minimal disturbance to the original structure because it is installed with no connection to the bridge deck.

It has been reported (*8*) that a reduction in live-load moments of up to 30 percent can be obtained for interior stringers of bridges spanning 100 ft to 400 ft simply by taking into account the cross frames that are already present. This calculated reduction was determined by the use of a finite element program in the analysis of the live-load distribution. A simplified method of analysis is available (*22*) for common, short-span to medium-span bridges.

The most common method of increasing transverse load distribution in timber deck bridges is one that has been used in Canada over the past few years. If consists of transverse post-tensioning of the deck in order to increase the interaction btween laminates. Several examples of this method can be found in Refs. *330, 73,* and *72*. Generally, the method is more effective structurally and economically than transverse stiffening of stringer bridges.

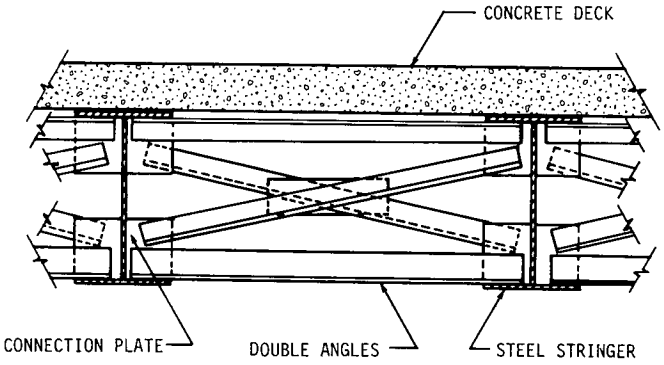

Figure 48. Typical cross frame diaphragm.

3.6 IMPROVING THE STRENGTH OF VARIOUS BRIDGE MEMBERS

3.6.1 Addition of Steel Cover Plates

3.6.1.1 Steel Stringer Bridges

3.6.1.1.1 Description. One of the most common procedures used to strengthen existing bridges is the addition of steel cover plates to existing members. Steel cover plates, angles, or other sections may be attached to the beams by means of bolts or welds. The additional steel is normally attached to the flanges of existing sections as a means of increasing the section modulus, thereby increasing the flexural capacity of the member. In most cases the member is jacked up during the strengthening process, relieving dead-load stresses on the existing member. The new cover plate section is then able to accept both live-load and dead-load stresses when the jacks are removed; this ensures that less steel will be used for the cover plates. If the bridge is not jacked up, the cover plate will carry only live-load stresses, and more steel will be required.

3.6.1.1.2 Applicability, advantages, and disadvantages. The techniques described in this manual are widely applicable to steel members whose flexural capacity is inadequate. Members in this category include steel stringers (both composite and noncomposite), floor beams, and girders on simple supported or continuous bridges. Note, however, that cover plating is most effective on composite members.

There are a number of advantages to using steel cover plates as a method of strengthening existing bridges. This method can be quickly installed and requires little special equipment and minimal labor and materials. If bottom flange stresses control the design, cover plating is effective even if the deck is not replaced. In this case, it is more effective when applied to noncomposite construction. In addition, design procedures are straightforward and thus require minimal time to complete.

In certain instances these advantages may be offset by the costly problems of traffic control and jacking of the bridge. As a minimum, the bridge may have to be closed or separate traffic lanes established to relieve any stresses on the bridge during strengthening. In addition, significant problems may develop if part of the slab must be removed in order to add cover plates to the top of the beams. When cover plates are attached to the bottom flange, the plates should be checked for under clearance

if the situation requires it. Still another potential problem is that the existing members may not be compatible with current welding materials, if welding (the normal procedure for attaching cover plates) is selected.

The most commonly reported problem encountered with the addition of steel cover plates is fatigue cracking at the top of the welds at the ends of the cover plates. In a study by Wattar et al. (*359*), it was suggested that bolting be used at the cover plate ends. Tests showed that bolting the ends raises the fatigue category of the member from stress Category E to B and also results in material savings by allowing the plates to be cut off at the theoretical cutoff points.

Another method for strengthening this detail is to grind the transverse weld to a 1:3 taper (*242*). This is a practice of the Maryland State Highway Department. Using an air hammer to peen the toe of the weld and introduce compressive residual stresses is also effective in strengthening the connection (*242*). The fatigue strength can be improved from stress category E to D by using this technique. Either solution has been shown to reduce significantly the problem of fatigue cracking at the cover plate ends.

Materials other than flange cover plates may be added to stringer flanges for strengthening. For example, the Iowa DOT prefers to attach angles to the webs of steel I-beam bridges (either simple supported or continuous spans) with high-strength bolts as a means to reducing flexural live-load stresses in the beams. Figure 49 shows a project completed by the Iowa DOT involving the addition of angles to steel I-beams using high-strength bolts. In some instances the angles are attached only near the bottom flange. Normally, the bridge is not jacked up during strengthening, and only the live loads are removed from the particular I-beam being strengthened. The primary goal of adding angles is to achieve a slight stress reduction in the I-beam (as a minimum to reduce stresses to below 70 percent of yield), so the bridge will not have to be posted. This method appears to be an economical way of strengthening steel I-beam bridges that require only a slight stress reduction. This is due principally to its simplicity, as there is no need to remove any part of the deck, the angles are readily available from existing stock, and the angles can easily be cut to length. In addition, because the angles are bolted on, problems of fatigue cracking that could occur with welding are eliminated. This strengthening procedure can be carried out by local maintenance crews or more commonly is let in contract projects involving bridge deck repairs. This method does have one potential problem however: the possibility of having to remove part of a web stiffener should one be crossed by an angle.

Another method of adding material to existing members for strengthening is shown in Figure 50 where structural tees were bolted to the bottom flanges of the existing stringers using structural angles. This idea represented a design alternative recommended by Howard, Needles, Tammen and Bergendoff as one method of strengthening a bridge comprising three 50-ft simple spans. Each of the four stringers per span was strengthened in a similar manner.

3.6.1.1.3 Cost information. The cost of strengthening bridges using steel cover plates is highly variable. The significant cost factors include the amount of steel to be added, traffic control, and difficulty encountered in jacking up the superstructure. Cost estimates for cover plating standard, steel-stringer bridges are given in Table 16. In Case 1, a 30 ft, simple supported steel stringer bridge was cover plated full length. Partial length cover plates were used in Case 2, which is a 60 ft, simple supported steel stringer bridge, and in Case 3, which is two adjacent 60 ft, simple supported, steel stringer spans (*344*). All costs include (1) cleaning and sandblasting the steel stringer, (2) grinding the transverse welds at the cover plate ends to a 1:3 taper, (3) ASTM A36 steel cover plates, (4) attaching the plates with continuous fillet welds to American Welding Society (AWS) standards, and (5) repainting the stringers and cover plates. The bridges were assumed not to be jacked up during strengthening. Costs can be expected to vary linearly, as it is likely that steel and welding savings due to partial length cover plates on longer spans will be offset by progressively larger plates.

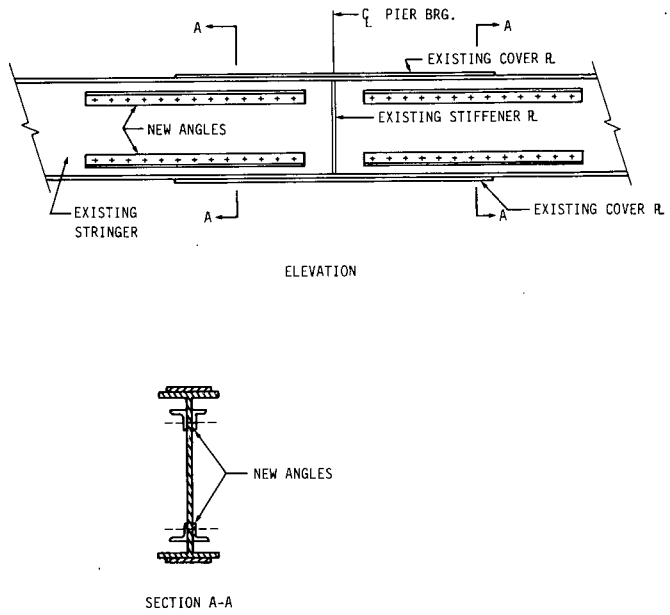

Figure 49. Iowa DOT method of adding angles to steel I-beams.

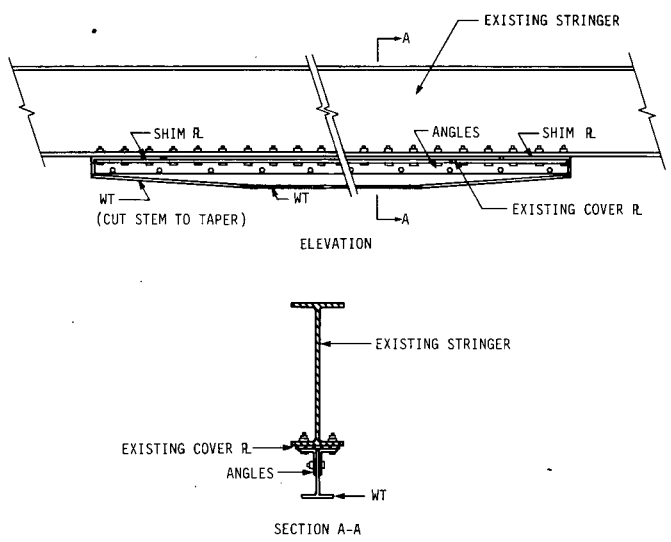

Figure 50. Strengthening of existing steel stringer by addition of structural tee section.

Table 16. Cost data for cover plating steel-stringer bridges.

Bid Item	Case 1 30-ft Span* Quantity	Case 1 30-ft Span* Bid Price	Case 2 60-ft Span* Quantity	Case 2 60-ft Span* Bid Price	Case 3† Quantity	Case 3† Bid Price
Mobilization	L.S.‡	$ 2,000	L.S.	$ 3,000	L.S.	$ 5,000
Containment	L.S.	$ 500	L.S.	$ 700	L.S.	$ 1,200
Repair	L.S.	$11,000	L.S.	$28,300	L.S.	$51,800
Painting	L.S.	$ 1,500	L.S.	$ 4,000	L.S.	$ 6,000

*Simply supported.

†Two adjacent, simply supported, 60-ft spans.

‡Lump sum.

3.6.1.1.4 Design procedure. Listed in the following are the basic design steps required in the design of steel cover plates:

1. Determine moment and shear envelopes for desired live-load capacity of each beam.
2. Determine the section modulus required for each beam.
3. Determine optimal amount of steel to achieve desired section modulus—strength requirement, fatigue requirement.
4. Design connection of cover plates to beam strength requirement, fatigue requirement.
5. Determine safe cutoff point for cover plates.

In addition to the foregoing design steps, the following construction considerations may prove helpful.

1. Grinding the transverse weld to a 1:3 taper or bolting the ends of plates rather than welding reduces fatigue cracking at the cover plate ends (*242*).
2. In most cases a substantial savings in steel can be made if the bridge is jacked to relieve dead-load stresses prior to adding cover plates.
3. The welding of a cover plate should be completed within a working day. This minimizes the possibility of placing a continuous weld at different temperatures and inducing stress concentrations.
4. Shot blasting of existing beams to clean welding surface may be necessary.

3.6.1.2 Reinforced Concrete Bridges

3.6.1.2.1 Description. One method of increasing flexural capacity of a reinforced concrete beam is to attach steel cover plates or other steel shapes to the beam's tension face. The plates or shapes are normally attached by bolting, keying, or doweling to develop continuity between the old beam and new material. If the beam is also inadequate in shear, combinations of straps and cover plates may be added to improve both shear and flexural capacity. Because a large percentage of the load in most concrete structures is dead load, for cover plating to be most effective, the structure should be jacked prior to cover plating to relieve the member of dead-load stresses. The addition of steel cover plates may also require the addition of concrete to the compression face of the member.

3.6.1.2.2 Applicability. A successful method of strengthening reinforced concrete beams has involved the attachment of a steel channel to the stem of a beam. This technique is shown in Figure 51. Taylor (*329*) performed tests on a section using steel channels and found it to be an effective method of strengthening. Documented use of the method has also been made in Sweden (*364*). An advantage to this method is that rolled channels are available in a variety of sizes, require little additional preparation prior to attachment, and provide a ready formwork for the addition of grouting. The channels can also be easily reinforced with welded cover plates if additional strength is required. Prefabricated channels are an effective substitute when rolled sections of the required size are not available. The reinforced concrete beams are first prepared by removing dirt and any other foreign material, exposing the coarse aggregate (grit blasting is recommended), and removing any final debris and dust with compressed air or vacuuming. Stirrups and longitudinal steel are then located and marked and bolt holes are drilled through the reinforced concrete beam. It should be noted that the bolts are placed above the longitudinal steel so that the stirrups can carry shear forces transmitted by the channels. If additional sheer capacity is required, external stirrups should also be installed (*60*) (see Sec. 3.6.2). It is also recommended that an epoxy resin grout be used between the bolts and concrete. The epoxy resin grout provides greater penetration in the bolt holes, thereby reducing slippage and improving the strength of the composite action.

Bolting steel plates to the bottom and sides of beam sections has also been performed successfully, as documented by Warner (*355, 356*). Bolting may be an expensive and time-consuming method, because holes usually have to be drilled through the old concrete. Bolting is effective, however, in providing composite action between the old and new material.

The placement of longitudinal reinforcement in combination with a concrete sleeve or concrete cover is another method for increasing the member's flexural capacity. This method is shown in Figure 52(a) and (b) as outlined in an article on strengthening by Westerberg (*364*). Warner (*355*) presents a similar method that is shown in Figure 52(c).

Developing a bond between the old and new material is critical to developing full continuity. Careful cleaning and preparation of the old concrete and the application of a suitable epoxy-resin

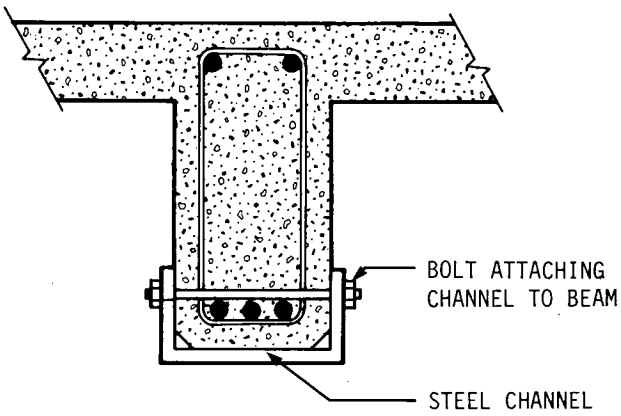

Figure 51. Addition of a steel channel to an existing reinforced concrete beam.

primer prior to adding new concrete should provide adequate bonding. Stirrups should also be added to provide additional shear reinforcement and to support the added longitudinal bars.

3.6.1.2.3 Cost information. Cost estimates were obtained for strengthening a 50 ft, tee beam, reinforced concrete bridge (*344*). The bridge consisted of four beams strengthened with fabricated channels of ¾-in. steel plate bolted to the beams as shown in Figure 51. Typical bid items and costs are given in Table 17.

3.6.1.2.4 Design and analysis procedure. The design of steel cover plates for concrete members is dependent on the amount of continuity assumed to exist between the old and new material. If one assumes that full continuity can be achieved and that strains vary linearly throughout the depth of the beam, calculations are basically straightforward. As stated earlier, much of the load in concrete structures is dead load, and jacking of the deck during cover plating will greatly reduce the amount of new steel required. It should also be pointed out that additional steel could lead to an overreinforced section. This could be compensated for by additional concrete or reinforcing steel in the compression zone.

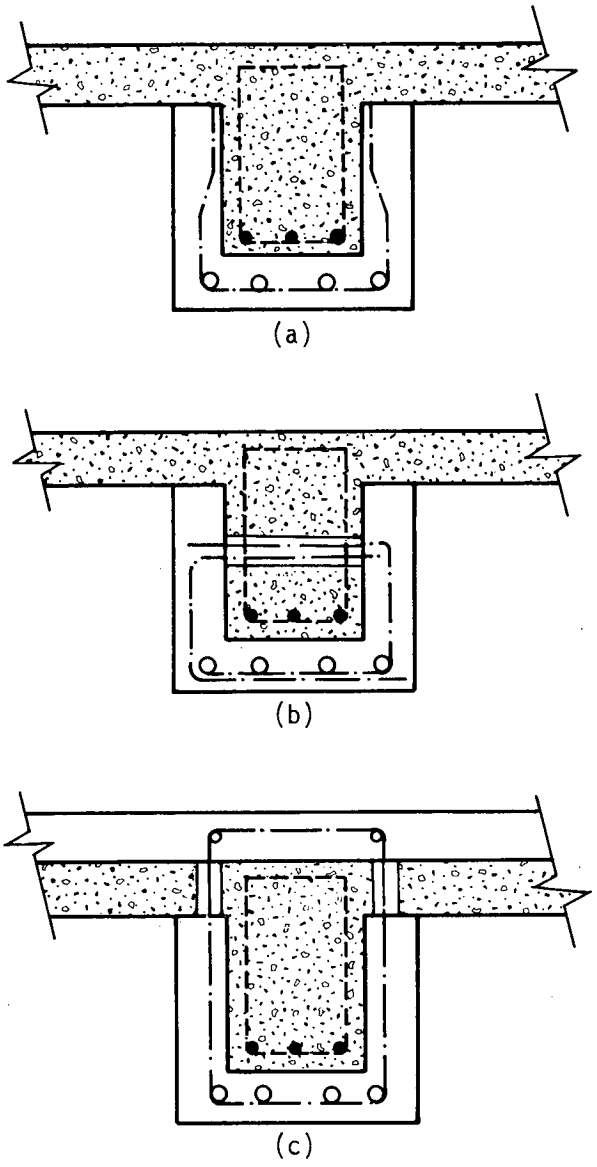

Figure 52. Techniques for increasing the flexural capacity of reinforced concrete beams with reinforced concrete sleeves.

3.6.1.3 Timber Stringer Bridges

Adding steel cover plates or channels to timber stringers is a method frequently applied to increase the flexural capacity of the existing timber stringers. The cover plates or channels are normally attached with lag screws or bolts to the timber members as shown in Figure 53. As shown in the figure, cover plating may also be used to increase the beam's shear capacity. The timber stringers should be free of decay and in generally good condition. Preparation prior to attaching the cover plates normally involves applying a field preservative treatment to the timber and painting the steel.

Adding steel cover plates or channels can be quickly and easily accomplished by local maintenance forces. Only routine design and analysis calculations are required of the bridge engineer.

A key consideration in the application of steel cover plates is obtaining composite action between the timber stringer and steel cover plates. The proper spacing of lag screws or bolts will ensure that composite action between the two occurs. Unless the timber stringers are jacked up to relieve dead-load stresses, only live-load stresses should be considered carried by the stringer and cover plates in combination.

3.6.1.4 Compression Members in Steel-Truss Bridges

3.6.1.4.1 Description. A common method of strengthening compression members in steel-truss bridges is to add steel cover plates to the existing members. The steel cover plates increase the member's cross-sectional area and, if properly applied, will also reduce the slenderness ratio ℓ/r, of the compression member. In most cases, the reduction in slenderness ratio is the major influence in increasing the capacity of the member. There-

Table 17. Cost data for cover plating reinforced concrete bridges.

Bid Item	Quantity	Bid Price
Clean and Blast Beams	4 each	$500 each
Drill Holes in T-section	104 each	$25 each
Structural Steel	41,000 lbs	$0.70/lb
Epoxy-Resin Concrete Treatment	290 sq ft	$4/sq ft
Pressure Grouting	L.S.*	$2,400
Mobilization	L.S.	$2,000

*Lump sum.

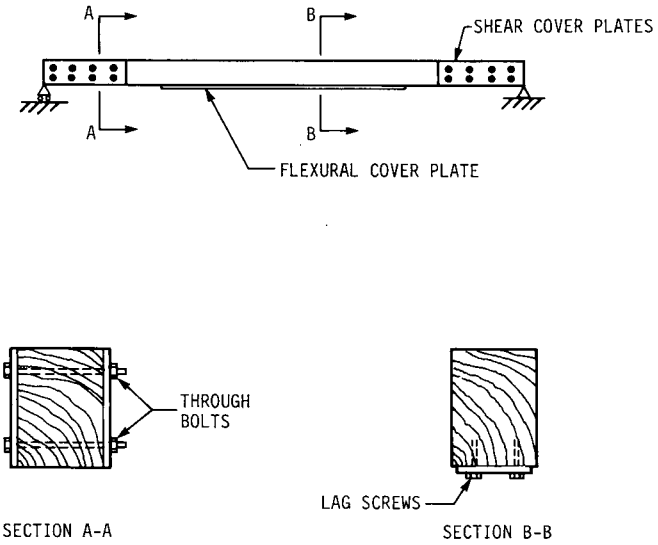

Figure 53. Cover-plate strengthening of timber stringers.

fore, the most desirable solution is obtained when new material is positioned such that it causes the greatest reduction in slenderness ratio for the member. Before a compression member is strengthened, the adequacy of the connections at each end of the member should be analyzed to determine if the connections also can support the increase in live load.

Compression members in many bridges may also be eccentrically loaded because of an unsymmetrically designed section, loss of member section because of corrosion, or misalignment of the member because of joint deterioration and slippage. Cover plating these members can eliminate or significantly reduce the additional stresses caused by eccentric loading in these members. Figure 54 shows typical truss compression members strengthened with steel cover plates and steel angles (*84*). It should be noted that the placement of the steel cover plates in the figures reduces eccentric loading conditions and also increases the radius of gyration.

Another attachment scheme used to strengthen existing double angle compression members in a truss is shown in Figure 55 (*19*). As shown, a tee-section was shop welded to a plate, which was then bolted to the existing compression member.

Figure 56 illustrates a box section used to strengthen existing members on a railroad truss bridge in Mexico (*268*). The box surrounds the existing member and is welded at various locations around the section.

3.6.1.4.2 Applicability, advantages, and disadvantages. The most significant advantage of using steel cover plates is the ease of installation compared to the removal and replacement of the entire compression member. In addition, only a small amount of steel may be required to produce substantial increases in member strength.

A key dilemma when adding steel cover plates is the method to introduce dead-load stresses into the new material, since it is more efficient if dead-load and live-load stresses are shared equally between the old and new material. Various methods can be employed to do this. The most common method used with major members (e.g., W-sections) is to calculate the amount of shortening required in the new material to produce the dead-load stresses present in the existing member. Holes are then drilled in the old and new members in such a way that the new members will be shortened by drifting, as the sections are bolted together. Another strengthening method, normally applied to upper chords and end posts, is the addition of reinforcement provided in the form of a new central web with top and bottom flange angles, as illustrated in Figure 57. The new reinforcement

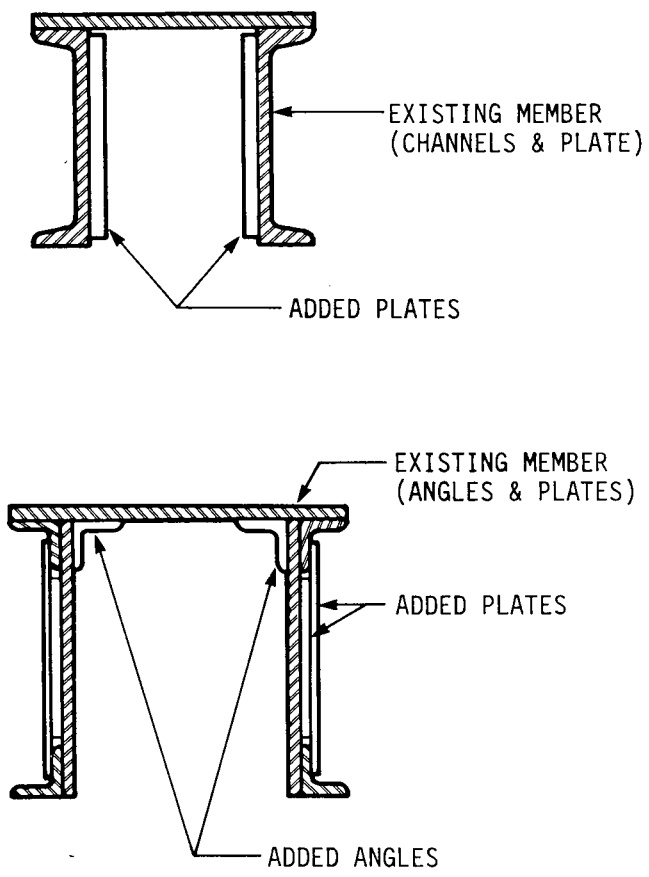

Figure 54. Adding material to decrease slenderness ratio of an existing member.

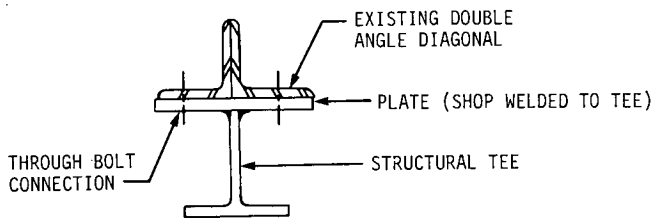

Figure 55. Strengthening of truss diagonals.

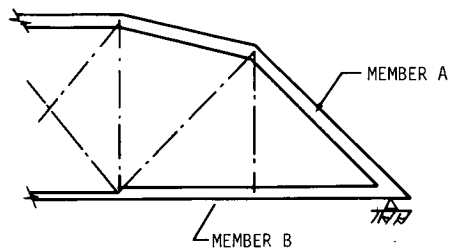

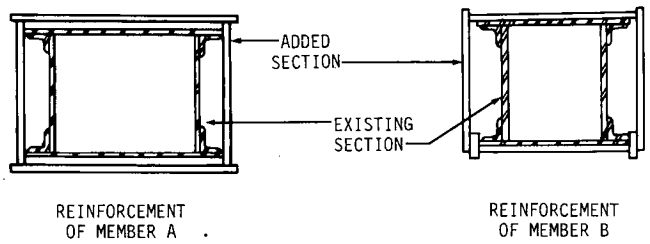

Figure 56. Strengthening of end post and bottom chord of through-truss.

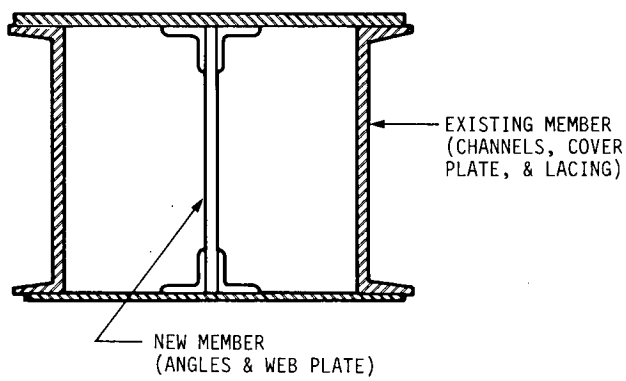

Figure 57. Addition of a central web to an existing compression member using angles.

along the chord is divided into two segments, each occupying approximately one-half of a panel length. The new material is carefully seated for proper bearing against the pins or connections, and wedges are inserted between the two half segments in each panel. The wedges in each panel are then drawn up simultaneously to develop the desired dead-load stress in the new material before being fastened to the existing member. The flanges of the new segments are then bolted to the top cover plate and to the lower lacing bars; the wedges are not removed but are left in place permanently. Both of these techniques of introducing dead-load stresses into the new material will require care in their application to ensure that the new material does not buckle prior to being fastened to the existing members.

A construction method used in the strengthening of a truss bridge in West Germany (*233*) provides another possible method of introducing dead-load stress into a cover-plated member. A splint-type device made up of a heavy steel beam, which could extend over three truss panels, was used with a hydraulic jack system to alter loads in selected truss members (see Fig. 58). The beam was designed to carry panel shear if a diagonal member were to be removed. Large rectangular frames were looped around the beam and upper chord to support the hydraulic jacks.

If the deck is to be replaced, consideration should also be given to attaching the required compression member cover plates after the deck has been removed, since the deck on most truss bridges normally accounts for about one-half of the bridge's dead load. Cover plates should also be run the full length of the member to ensure adequate force transfer at the end connections.

3.6.1.4.3 Cost information. Costs will vary significantly depending on the amount of new material to be added. Sabnis (*277*) estimated the costs for strengthening Warren Through Truss bridges from HS-15 to HS-20 load capacity as follows:

A. Basic construction cost: \$17 to \$20 per sq ft
B. Basic construction cost including design fee and traffic maintenance during construction: \$33 to \$37 per sq ft
C. Total cost including design and installation of new lightweight deck: \$53 to \$58 per sq ft

The span length for the cost estimates ranged between 100 ft and 140 ft.

3.6.1.4.4 Design procedure. The design procedure involves the following steps:

1. Perform structural analysis of the truss for the new loading condition and determine required capacity of compression members.
2. Determine existing capacity of compression members.
3. Estimate additional steel required and its optimum location (usually to the outside of the existing member and along the line of weak axis buckling).
4. Determine new member capacity and check against required capacity.

3.6.1.4.5 Design example. A design example is provided to illustrate the procedure for cover plate design. An existing compression member is made up of two C12 $\times$ 20.7 members laced together with a back-to-back spacing of 12 in. as shown in Figure 59. The unbraced length in both directions is 28 ft 4 in., the member is pin connected on both ends, and the yield point of the steel is assumed to be 33,000 psi.

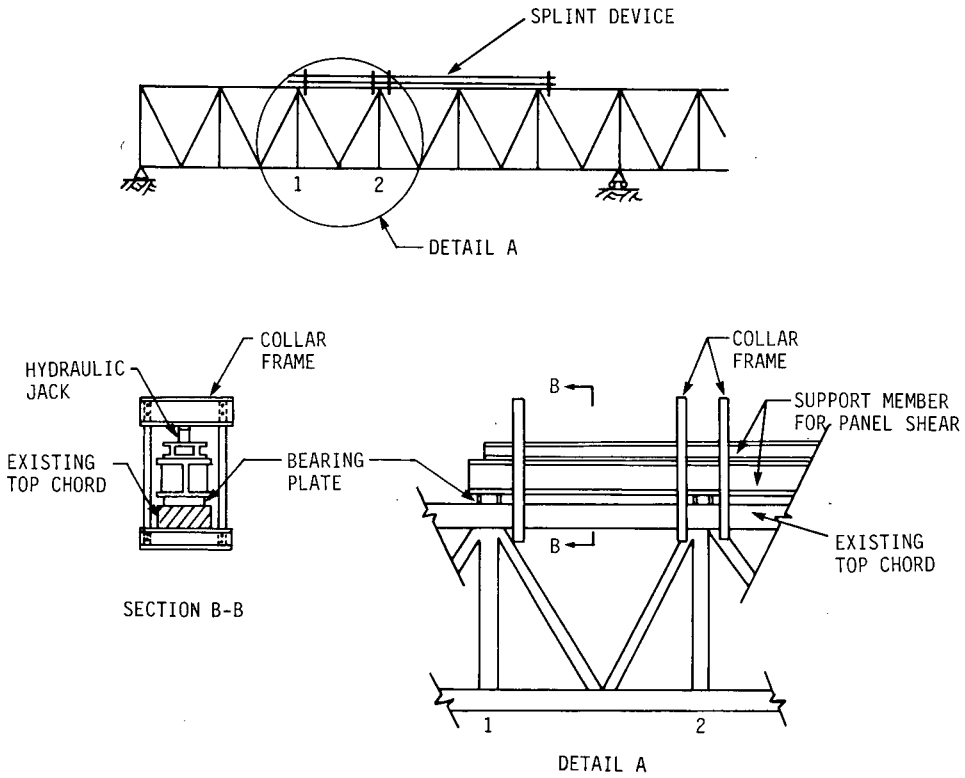

Figure 58. Device used to modify forces in existing truss members during strengthening.

New loading conditions require the member to carry an axial force of 210 kip. In addition, because the old member will not be relieved of dead-load stresses, the new material will only be required to carry live-load stresses.

Determine the existing capacity of compression member in accordance with the AASHTO Service Load Design Method (*4*):

- *Given*

$$A = 12.18 \text{ in.}^2$$
$$I_x = 258 \text{ in.}^4$$
$$I_y = 350.2 \text{ in.}^4$$

- *Determine Controlling Radius of Gyration (r)*

$$r_x = \sqrt{\frac{I_x}{A}} = \frac{258}{12.18} = 4.61 \text{ in.}$$
$$r_y = \sqrt{\frac{I_y}{A}} = \frac{350.2}{12.18} = 5.36 \text{ in.}$$
$$r_x < r_y \therefore r_x \text{ controls}$$

- *Calculate Allowable Stress:*

$K = 1.0$ (Effective Length Factor: 1.0 for pin-connected members)

$$\frac{K\ell}{r} = \frac{(1.0)(340 \text{ in.})}{4.61} = 73.75 \left(\text{Slenderness Ratio} = \frac{K\ell}{r}\right)$$

$$C_c = \left[\frac{2\pi^2 E}{F_y}\right]^{1/2} = 131.7 > 73.75 \text{ [Table 10.32.1A, Ref. 4]}$$

$$\therefore F_a = \frac{F_y}{F.S.}\left[1 - \frac{(K\ell/r)^2 F_y}{4\pi^2 E}\right] \text{ [Table 10.32.1A, Ref. 4]}$$
$$= \frac{33}{2.12}\left[1 - \frac{(73.75)^2 (33)}{4\pi^2 E}\right]$$
$$= 13.13 \text{ ksi}$$

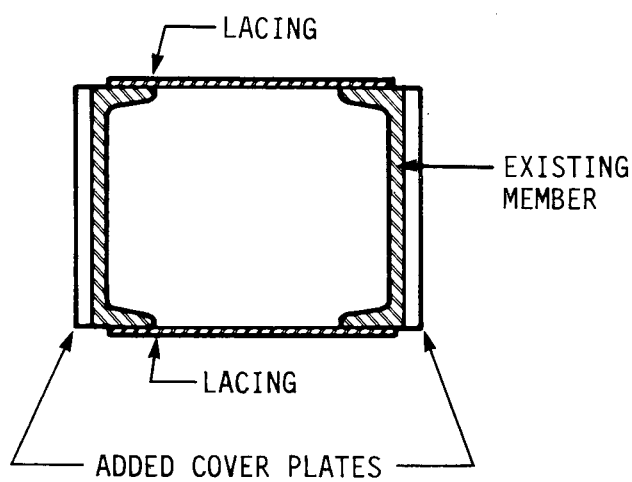

Figure 59. Design example—Member to be strengthened by addition of steel cover plates.

The allowable load for the existing member is therefore:

Allowable load = 13.13 (12.18)
= 160 kip < 210 kip required

Try ⅜ in. × 11 in. plates (A36 steel) full length as shown in Figure 59.

To determine the new capacity of the member, a column strength curve will be developed that accounts for both the residual stresses in the member and the additional dead load in the old material. The difficulty with this approach, however, is how to determine accurately the residual stresses in the new and old material because of the way each was formed during milling and the way their capacities were affected after the two were welded together. Rather than try to estimate these residual stresses, a more conservative approach will be to approximate the region with a straight line where inelastic buckling will occur.

Dead-load stresses in the old material: $f_{D.L.} = 60/\ 12.18 = 4.9$ ksi. Assume the maximum residual stresses in both old and new material to be $0.5\ F_y$; $f_R = 0.5\ (33) = 16.5$ ksi. Therefore, the total initial stress in the old material is $f_T = 4.9 + 16.5 = 21.4$ ksi.

The slenderness ratio at which inelastic buckling will occur in the new member can be calculated from the basic Euler buckling equation:

$$\frac{K\ell}{r} = \sqrt{\frac{\pi^2 E}{F_{CR}}}$$

where $F_{CR} = F_y - f_T$, and

$$\frac{K\ell}{r} = \sqrt{\frac{\pi^2\ (29{,}000)}{(33 - 21.4)}} = 157.1.$$

A typical column strength curve for a steel compression member is shown by the dashed line in Figure 60. The inelastic buckling region can be conservatively approximated with a straight line, as shown by the solid straight line in Figure 60.

Determine $K\ell/r$ for the new member:

$$A = 20.43 \text{ in.}^2$$

$$I_x = 258 + 2\left(\frac{1}{12}\right)\left(\frac{3}{8}\right)\left(11\right)^3$$

$$I_x = 341.2 \text{ in.}^4$$

$$r_x = \sqrt{\frac{I_x}{A}} = \sqrt{\frac{341.2}{20.43}} = 4.09 \text{ in.}$$

$$\frac{K\ell}{r} = \frac{(1.0)\ (340)}{4.09} = 83.2$$

From the straight-line approximation for the column strength curve (see Fig. 60), for $(K\ell)/(r) = 83.2$, $P/Ag = 22.0$ ksi, where P = axial compressive force and Ag = gross cross-sectional area.

Using the AASHTO (*4*) factor of safety of 2.12, $F_a = 22.0/2.12 = 10.4$ ksi; $P_{allow.} = (10.4)\ (20.43) = 212$ kip; $P_{req'd} = 210$ kip — therefore OK.

Use 2⅜ in. × 11 in. plates full length.

3.6.1.5 Strengthening Tension Members of Truss Bridges

3.6.1.5.1 Description. There are generally two methods of strengthening tension members of truss bridges, depending on the type of truss connection. For strengthening rolled or built-up sections that are bolted or riveted to gusset plates, steel cover plates should be attached for the full length of the existing members. For this method to be most effective, however, it will be necessary to introduce dead-load stresses into the new material before attaching it; this ensures that dead-load and live-load stresses are shared equally between new and existing material and thereby reduces the amount of new material required. This can be most easily accomplished by attaching cable slings with turnbuckles next to the tension member as illustrated in Figure 61 (*32*). When the cable slings are tightened, the existing

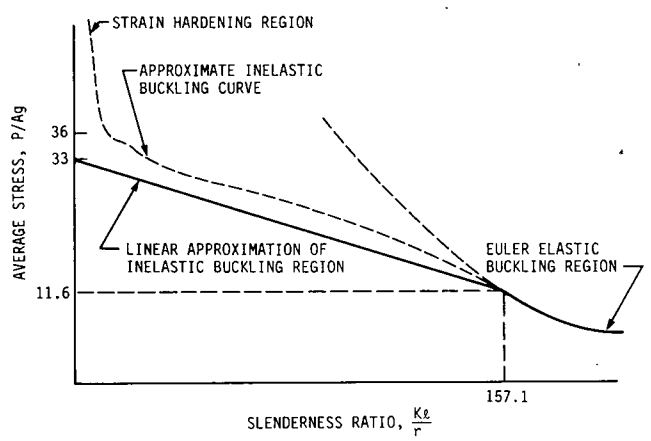

Figure 60. Column strength curve.

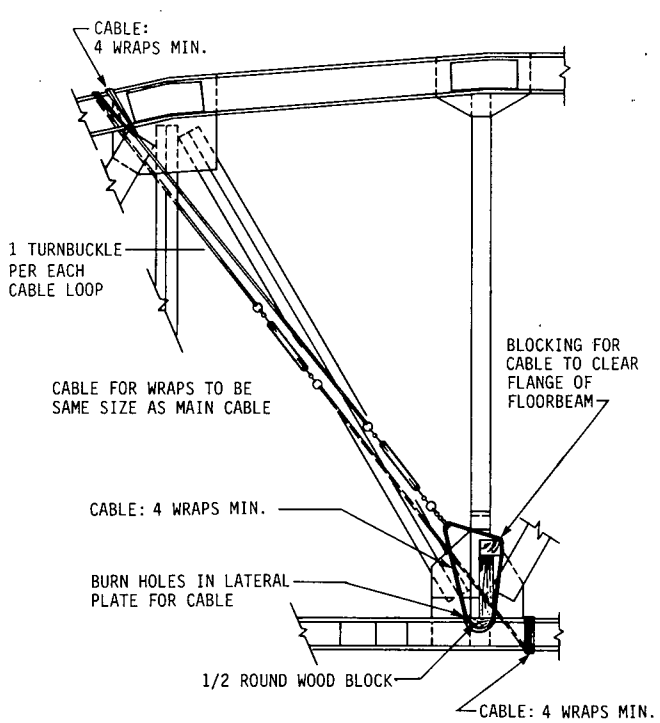

Figure 61. Method for relieving stresses in existing tension member before strengthening.

member is relieved of dead-load stresses and new cover plates are attached. Note that when cover plates are used to strengthen existing members, the plates should be protected against notches or other severe stress concentrations that may produce fatigue cracking in the existing member or end connections (*242*). In addition, the cover plates should be connected to the gusset plates at the panel points to ensure full load transfer to the new material.

Tension members of pin-connected trusses may also be strengthened by adding adjustable bars or cables (*328*). As with the addition of cover plates, the new members should be expected to share equally the dead-load and live-load stresses with the existing member. Adjustable bars or cables that utilize turnbuckles are most often used to accomplish this. Eyebars and rods that do not have adjustable provisions can be adjusted by heating of the member by using the procedure described in Section 8.2 of Chapter 15 of the AREA Manual (*12*). An added benefit of these supplementary members is that they can also be designed to carry the full load expected of the new member and thereby add redundancy to the truss system and prevent catastrophic failure should the original member fail. When supplementary members are added, care should be taken in the placement of the new members so that eccentricities are not introduced into the connection. For tension members consisting of two eye bars, this can be accomplished by placing the new member between existing members. If room permits at the connection, single eye-bar members should be supplemented with two new members placed on either side of the existing member.

As with any structural modification to an existing member, a structural analysis must be performed to ensure the remaining structural system is also capable of supporting increased loads. In particular, connections may require strengthening in order to support heavier loads carried by connecting members. If members are to be welded together, weld compatibility of the old material will also need to be verified. If a bar of uniform section is bent around a pin, additional strengthening may be required because the cross section is likely to be reduced by the stretching of the bar and narrowing of the outer edge (*277*).

3.6.1.5.2 Cost information. Costs will vary considerably depending on the amount of material to be added.

3.6.1.5.3 Design procedure. The following procedures refer to the two methods generally used in strengthening tension members of truss bridges; namely, cover plating and the addition of supplementary members:

1. Cover plating—If it is planned that all stresses will be shared equally with the new material, the additional area is calculated from $A_2 = P/F_t$, where F_t = lowest allowable stress in either old or new material, ksi; P = combined dead-load and live-load requirements, kips; A_2 = total area required of new and old material, in.^{2}

If the dead load is to be carried by the existing member and live load is to be shared equally between new and old material, then $A_2 = (P_{LL}A_1)/(F_tA_1 - P_{D.L.}$ where F_t = lowest allowable stress in either new or old material, ksi; $P_{D.L.}$ = applied dead loads, kips; A_1 = area of existing member, in.^{2}; $P_{L.L.}$ = applied live loads, kips; and A_2 = total area of new and old material, in.^{2}

2. Supplementary members—The design of supplementary members follows the basic procedures given for cover plating.

With working stress design when old and new members equally share all loads: $A_2 \geq P_T/F_t$, where F_t = lowest allowable stress in either new or old material, ksi; P_T = combined dead-load and live-load requirements, kips; and A_2 = total area of new and old members, in.^{2}.

If added redundancy for the truss system is desired of the new member, the new member must also be capable of supporting the entire load. Bondi (*41*) recommended that new members be stressed to no more than 90 percent of yield stress after investigating the effects of strengthening the Ambridge-Aliquippa bridge.

With ultimate strength design—new member designed to carry entire load should the old member fail: $A_3 \geq P_t/0.9\ F_y$, where P_T = combined dead-load and live-load requirements, A_3 = area of new material, and F_y = allowable yield stress of new material.

3.6.2 Shear Reinforcement

3.6.2.1 External Shear Reinforcement for Concrete, Steel, and Timber Beams

The shear strength of a reinforced concrete beam or prestressed concrete beam can be improved with the addition of external steel straps, plates, or stirrups. Steel straps are normally wrapped around the member and can be post-tensioned. A method of post-tensioning stainless steel stirrups has been developed. Post-tensioning allows the new material to equally share both dead and live loads with the old material, resulting in more efficient use of the material added. A disadvantage of adding steel straps is that cutting the deck to apply the straps leaves them exposed on the deck surface and thus difficult to protect. By contrast, adding steel plates does not require cutting through the deck. The steel plates are normally attached to the beam with bolts or dowels.

External stirrups may also be applied with different configurations. Figure 62(a) shows a method of attaching vertical stirrups using channels at the top and bottom of the beam. The

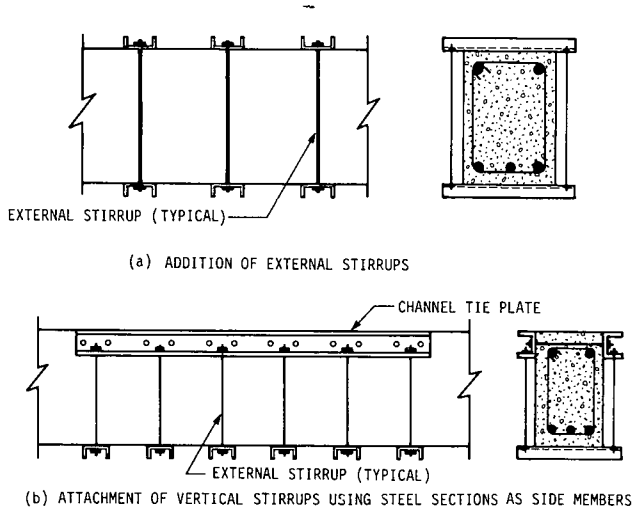

Figure 62. Methods of adding external shear reinforcement to reinforced concrete beams.

deck (not shown in either figure) provides protection for the upper steel channel (*355*). Adding steel sections at the top of the beam web and attaching stirrups is shown in Figure 62(b) (*364*). In this manner, cutting holes through the deck is eliminated. External stirrups can also be post-tensioned in most situations if desired.

Another method of increasing shear strength is shown in Figure 63. This method is a combination of post-tensioning and the addition of steel in the form of prestressing tendons. As recommended in a strengthening manual by the OECD (*239*), tendons may be added in a vertical or inclined orientation and may be either placed within the beam web or inside the box as shown in the figure. Care should be taken to avoid overstressing parts of the structure when prestressing. If any cracks exist in the member, it is a good practice to inject them with an epoxy before applying the prestressing forces. Documentation of this type of reinforcement technique is made also by Audrey and Suter (*318*) and Dilger and Ghali (*86*). Figure 64 illustrates the technique used by Dilger and Ghali where web thickening was added to the inside of the box web before adding external reinforcement consisting of stressed steel bars. The thickening was required to reduce calculated tensile stresses at the outside of the web due to prestressing the reinforcement.

West (*363*) makes reference to a number of methods of attaching steel plates to deficient steel I-Beam girder webs as a means of increasing their shear strength. The steel plates are normally of panel size and are attached between stiffeners by bolting or welding. Where shear stresses are high, the plates should fit tight between the stiffeners and girder flanges. In addition, West indicates that one advantage of this method is that it could be applied under traffic conditions.

Two easily applied methods of strengthening timber stringers with inadequate shear capacity have also been used. Adding steel cover plates, as previously shown in Figure 53, illustrates one method. *NCHRP Report 222* (*343*) demonstrates a method of repairing damaged timber stringers that could be used to strengthen timber stringers with inadequate shear capacity. The procedure involves attaching steel plates to the bottom of the beam in the deficient region and attaching it with draw-up bolts placed on both sides of the beam. Holes are drilled through the top of the deck, and a steel strap is placed at the deck surface and at the connection to the bolts.

Cost estimates were not obtained for this strengthening method because of the variability of the techniques discussed and the wide range of bridge strengthening situations that these methods could be applied to.

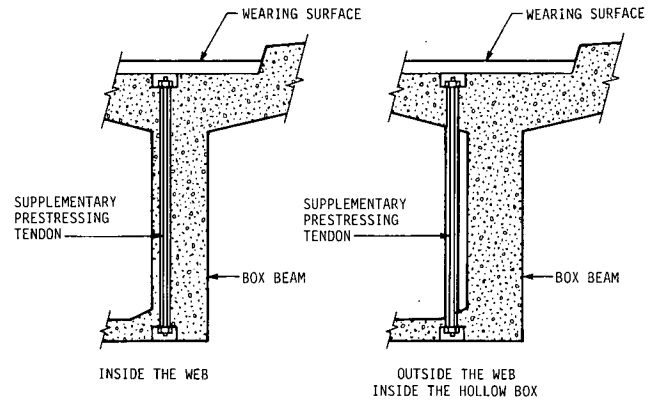

Figure 63. External shear reinforcement of box beam girders.

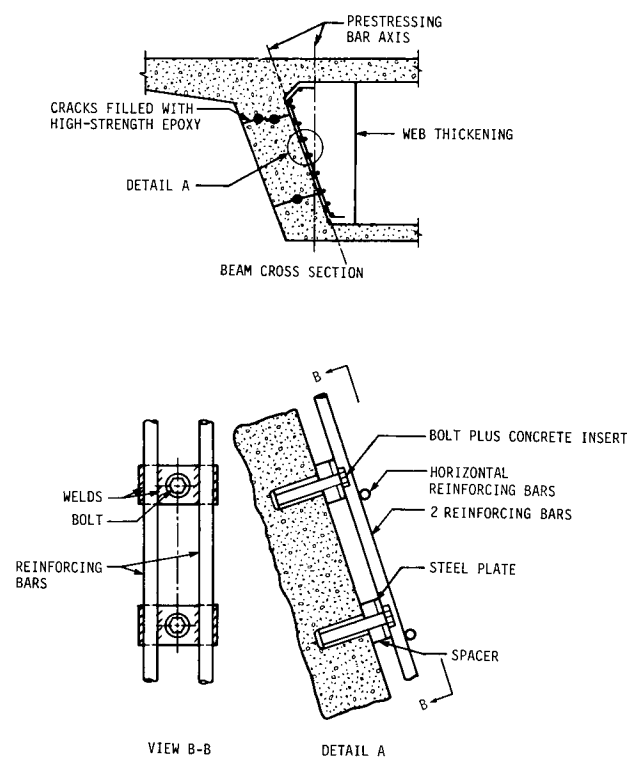

Figure 64. Details of web reinforcement to strengthen box beam in shear.

3.6.2.2 Epoxy Injection and Rebar Insertion

The Kansas Department of Transportation has developed and successfully used a method for repairing reinforced concrete girder bridges. The bridges had developed shear cracks in the main longitudinal girders (*314*). The procedure used by the Kansas DOT not only prevented further shear cracking but also significantly increased the shear strength of the repaired girders.

The method involves locating and sealing all of the girder cracks with silicone rubber, marking the girder center line on the deck, locating the transverse deck reinforcement, vacuum drilling 45-deg holes that avoid the deck reinforcement, pumping the holes and cracks full of epoxy, and inserting reinforcing bars into the epoxy-filled holes. A typical detail is shown in Figure 65.

An advantage of using the epoxy repair and rebar insertion method is its wide application to a variety of bridges. Although the Kansas DOT reported using this strengthening method on two-girder, continuous, reinforced concrete bridges, this method can be a practical solution on most types of prestressed concrete beam and reinforced concrete girder bridges that require additional shear strength. In addition, the Kansas DOT was able to train and utilize its own maintenance forces in applying this method, and only minor traffic restrictions were noted during the construction phase.

The essential equipment requirements needed for this strengthening method may limit its usefulness, however. Prior

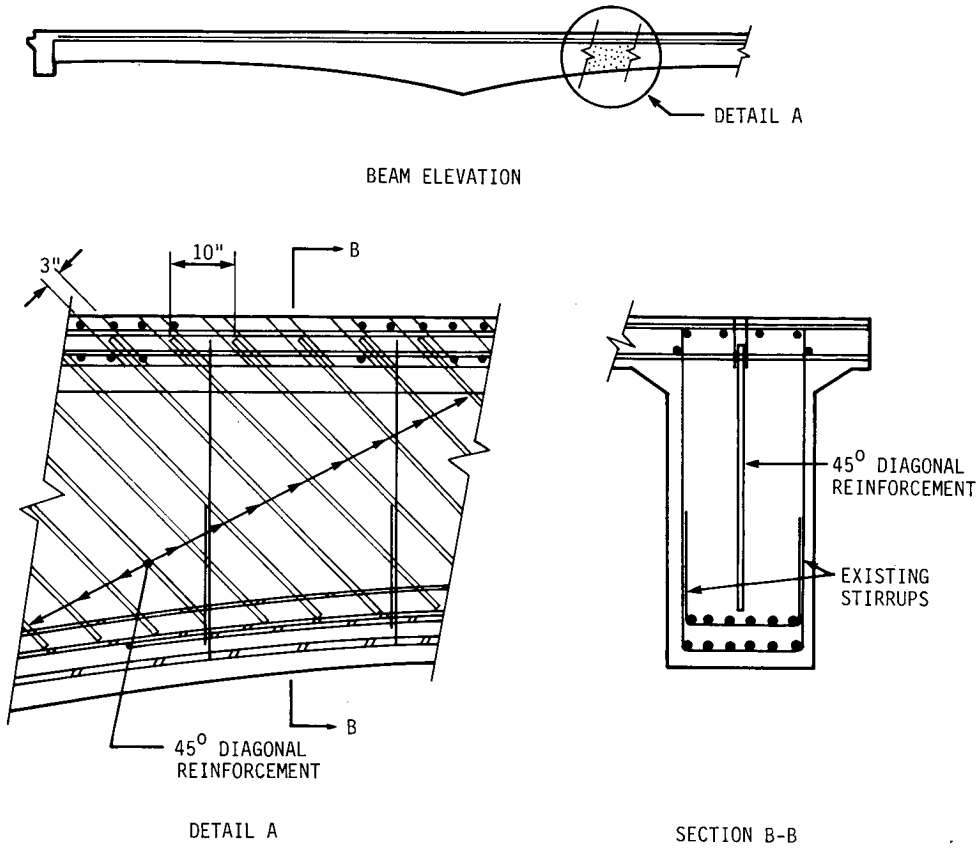

Figure 65. Kansas DOT shear strengthening procedure.

to drilling, the transverse deck steel must be located. The drilling unit and vacuum pump required must be able to drill quickly straight holes to a controlled depth and keep the holes clean and free of dust. Failure to keep the holes clean may result in the following occurring: (1) the epoxy pumped into the hole will not bond to the girder concrete; (2) the epoxy will not penetrate into small shear cracks (if they are present) because they will be filled with drilling dust; and (3) if the dust is not extracted as drilled, the drill will likely be irrevocably locked into the hole. In addition, the epoxy injection pump must be of positive displacement and able to deliver a certified volume ratio of hardener to resin in the temperature and pressure range needed to perform the injection.

The Kansas DOT reported an average cost of approximately $2,500 per girder half for nine girder halves on which this method was performed. This cost includes labor, material, and equipment rental costs only.

3.6.3 Jacketing of Timber or Concrete Piles and Pier Columns

Improving the strength of timber or concrete piles and pier columns can be achieved by encasing the column in concrete or steel jackets. The jacketing may be applied to the full length of the column or only to severely deteriorated sections. The jacketing increases the cross-sectional area of the column and reduces the column's slenderness ratio. Partial encasement of a column can also be particularly effective when an unbalanced moment acts on the column. Figure 66 illustrates two such concepts for member addition that were noted from work on strengthening reinforced-concrete structures in Europe (*364*).

Completely encasing the existing column in a concrete jacket has been a frequently used method of strengthening concrete pier columns. Normally, the reinforcement is placed around the existing column perimeter inside the jacket and "ramset" to the existing member (*364*). The difficulty most often observed with this technique is developing continuity between the old and new material. This is critical if part of the load is to be transferred to the new material. Work by Soliman (*299*) on repair of reinforced-concrete columns by jacketing has included an experimental investigation of the bond stresses between the column and jacket. The first step is normally surface preparation of the existing concrete column. This involves removing any dirt or deteriorated concrete. Consideration should also be given at this time to jacking of the superstructure and placing temporary supports on either side of the column. Soliman (*299*) concludes that this is an important step, since the shrinkage phenomenon causes compressive stresses on the column that will be reduced if the existing column is unloaded. In addition, supports will be necessary if the column shows significant signs of deterioration. This procedure will also allow the new material to share equally both dead and live loads after the supports are removed. Old rebar should be cleaned of any corrosion and

treated with an epoxy coating. Additional longitudinal reinforcing bars and stirrups are then placed around the column. Spiral stirrup reinforcement should be used because it will provide greater strength and ductility than normal stirrups (*299*). An epoxy resin is then applied to the old concrete to increase the bonding action between the old concrete and the concrete to be added. Formwork is then erected to form the jacket, and concrete is placed and compacted.

Jacketing techniques that have been used for seismic retrofitting of existing pier columns are illustrated in Figure 67 (*11*). Figure 67(a) shows the addition of longitudinal reinforcement in the jacketed area around the existing column. In order to develop the strength of the footing and the bent cap connection, the reinforcement can be extended and placed in predrilled holes in the footing and cap region. Dowels, which are then grouted after insertion into the holes, may also serve to add continuity to these joints. To complete the strengthening procedure, ties are located along the column and are bonded using gunite.

Improving the lateral strength of a column by jacketing is illustrated in Figure 67(b). The two methods of adding lateral reinforcement include (1) wrapping the existing column with tensioned prestressing wire and (2) adding a series of No. 4 hoops with a turnbuckle included to pretension the two ends of the hoops together. Both methods mentioned above should include applying a protective layer of shotcrete or cast-in-place concrete.

The jacketing of concrete columns with steel shapes follows procedures similar to those used for concrete jacketing. Three configurations are shown in Figure 68 (*364*) in which the primary mode of load transfer between the steel and column is shear friction. Before implementing the procedure, the column is cleared of dirt and old concrete and any exposed rebar is cleaned and treated. The steel shapes are treated with an epoxy coating or other form of weathering protection and erected around the column. The steel shapes form the jacket, and new concrete is compacted around the old column.

Typical costs for jacketing a concrete pier (*139*) (two columns) with concrete and rebar, as estimated by the Iowa DOT, was $13,038. The columns were jacketed a full length of 20 ft similar to the detail shown in Figure 67, and were assumed to be above the waterline. Quantities and costs are given in Table 18.

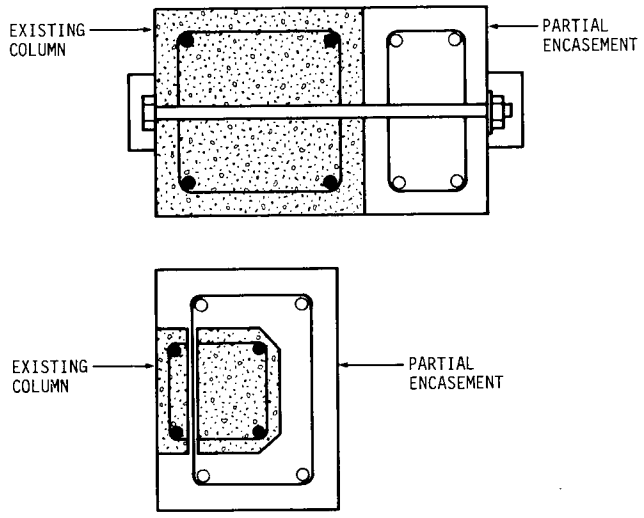

Figure 66. Partial jacketing of an existing column.

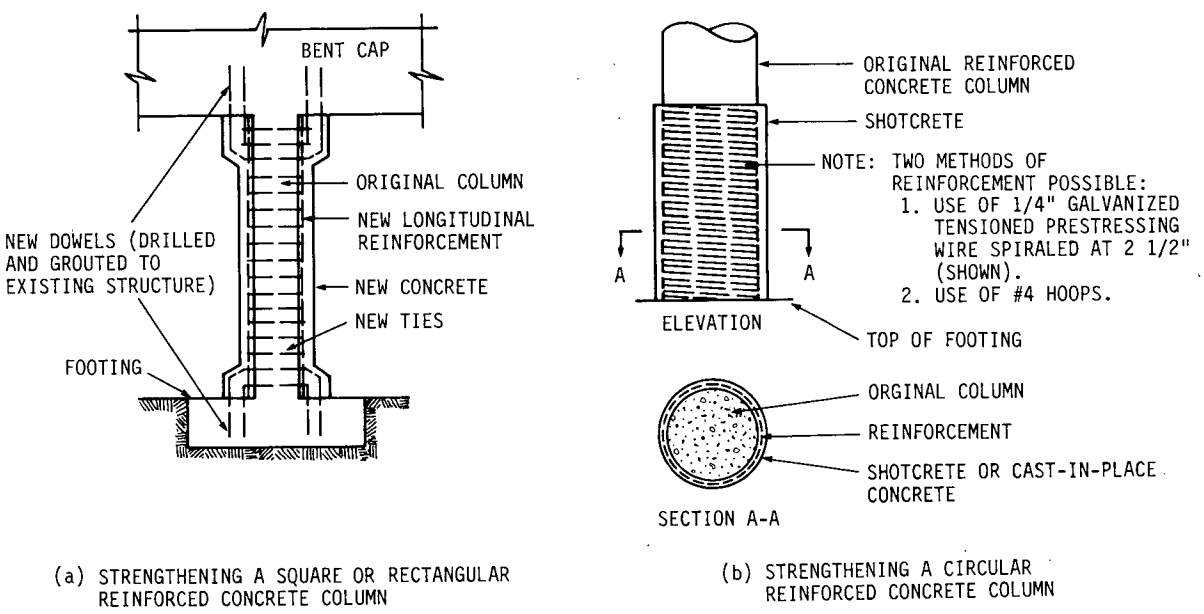

Figure 67. Examples of concrete jacketing techniques.

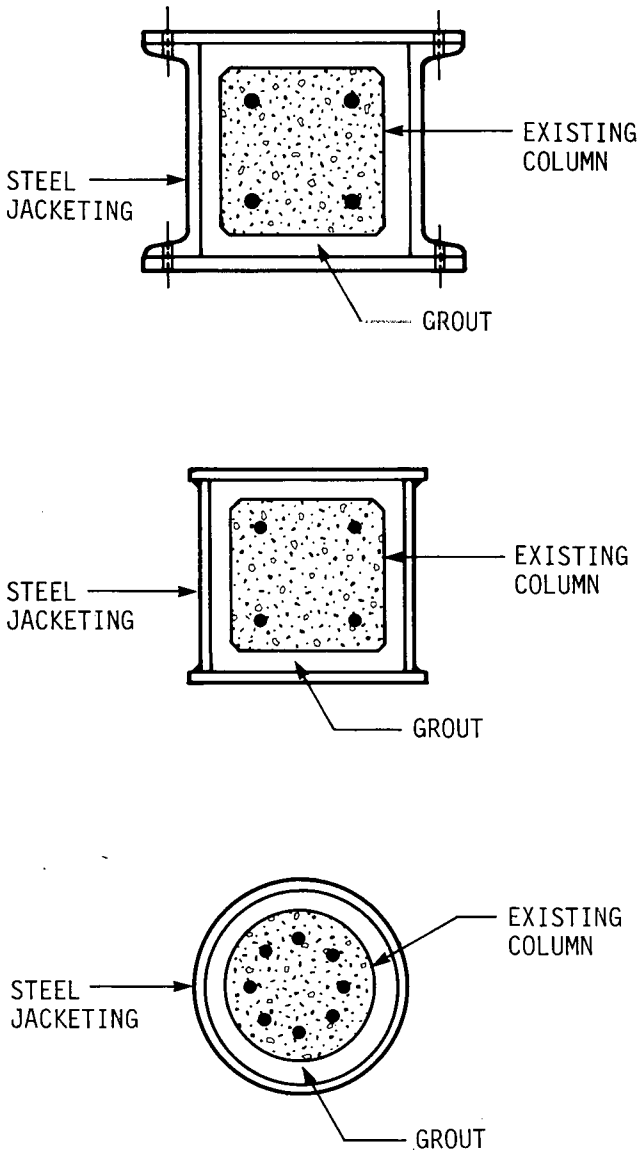

Figure 68. Cross-sectional view illustrating jacketing of concrete columns with steel shapes.

Table 18. Cost data for jacketing pier columns.

Bid Item	Quantity	Bid Price
Mobilization	L.S.*	$2,000
Structural Concrete	7.03 cu yd	$600/cu yd
Reinforcement	1,768 lbs	$0.60/lb
Clean and Prepare Columns	L.S.	$4,000
Epoxy Resin Concrete Treatment	440 sq ft	$4/sq ft

*Lump sum.

3.7 ADDING OR REPLACING MEMBERS

3.7.1 Adding or Replacing Stringers

Reinforced concrete, prestressed concrete, steel and timber stringer bridges can be strengthened by the addition or replacement of one or more stringers. Adding stringers will increase the deck capacity and reduce the magnitude of the loads distributed to the existing stringers. This method is most practically performed in conjunction with replacement of the deck because this allows respacing of the existing stringers. Adding stringers without stringer respacing should also be considered. Advanced computer analysis techniques, such as the finite-element method or orthotropic plate theory, can be used to analyze the effects of load distribution for such cases.

Stringer replacement is more typically a repair technique that is often used when a stringer has been damaged by an overheight vehicle or corrosion. Numerous articles (i.e., *242, 343*) describe procedures for replacing damaged stringers, and the manual user is referred to these. There may be situations where replacement could be effective as a strengthening technique, however. In particular, during the 1950s, a number of bridges were designed with exterior stringers of a lower capacity than the interior stringers. Recent changes in load distribution criteria have shown these exterior stringers to be undercapacity. Replacement of these exterior stringers is one application of stringer replacement, which is used for strengthening.

An important consideration, when adding or replacing a stringer, is that the new stringer should have approximately the same stiffness as that of the existing stringers, so that all stringers deflect an equal amount. The amount of load carried by each member is, among other factors, proportional to its stiffness (*84*). Therefore, more efficient use of the added material can be realized if loads are distributed equally to all members. When installing the new member, continuity between the deck and new stringer should be provided. This will ensure that there is adequate lateral support to the new member and that all voids between the deck and new member are filled. Clearance requirements under the bridge should also be checked prior to adding stringers.

The addition or replacement of a stringer is normally performed in conjunction with the replacement of the deck. This facilitates the placement of new members, redistribution of existing stringers, and connection of the deck to the new stringer. Widening the bridge may also be possible when deck replacement is combined with adding or replacing stringers.

The addition or replacement of a stringer is more difficult when the existing deck is not removed. The installation of the new member is usually carried out from below the bridge, normally a difficult procedure. Jacking of the existing deck may be required to allow installation of the new stringer and to ensure the new stringer carries its portion of the deck dead load. Respacing of the existing stringers is normally not practical, because the existing beams either are imbedded in the deck or are composite with the deck.

A steel stringer that is added without removing the concrete deck can be made to act compositely with the deck by coring through the existing deck and adding shear connectors (see Sec. 3.4). Voids between the deck and stringer can be filled by pressure grouting, either through holes in the deck or from below. An unusual procedure used on a bridge in England (*122*) involved first placing grout bags between the bottom of the

existing deck and the top flange of the supplemental stringer and subsequently pressure grouting.

A technique that has been used to replace an existing steel stringer without removing the deck is described in *NCHRP Report 222* (*343*). After jacking the bridge so that the stringer is clear of the bearing surface, the lower portion of the stringer is removed by cutting through the web directly below the top flange. The bottom face of the top flange is ground smooth and the new stringer is placed as shown in Figure 69. The new member is welded with continuous fillet welds. The new stringer must have a narrower flange width than the existing stringer to allow field welding. A cover plate on the bottom flange of the new stringer is suggested as a means of lowering the neutral axis and thereby reducing the lower flange flexural stress.

Figure 70 shows a method of adding or replacing timber stringers without removing the existing deck. The ends of the new beam are tapered as shown, allowing easier installation. The new beams are then installed with the cambered side placed upright against the deck (if the beam is warped). The cut-out wedges are then reinserted and attached to the deck and stringers (*343*).

For the case where the new beam is designed to replace an existing stringer, the old beam may be left in place and the new beam placed beside the existing stringer. If the existing stringer is still in good condition, additional lateral support can be provided to the new stringer by attaching it to the existing stringer with through-bolts.

The Iowa DOT has replaced damaged exterior beams on several prestressed concrete beam, CIP deck bridges. The average cost of replacing one beam and portions of the deck was between $40,000 and $50,000.

Economic information (based on Iowa DOT estimates) on the addition of supplementary members is provided in Table 19. Three standard steel stringer bridges (*344*) were used to obtain these estimates. Assumptions made in the development of each estimate were (1) removal of the deck and intermediate diaphragms; (2) existing interior beams respaced at 5 ft 6 in. on center from original spacing of 7 ft 4 in., and (3) new bearings provided for the added member.

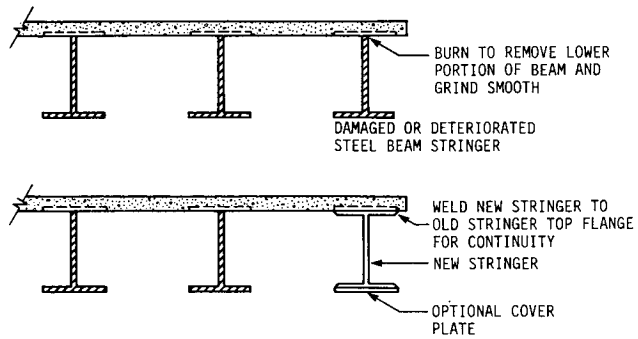

Figure 69. Replacement of a steel beam.

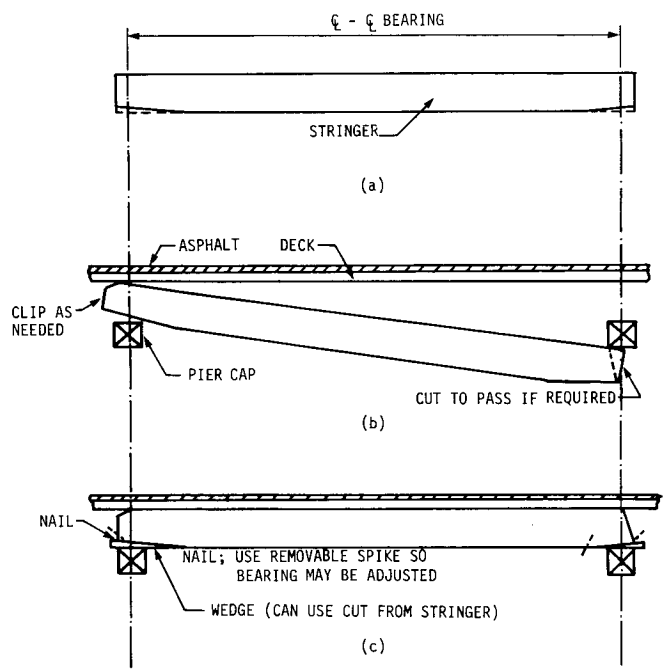

Figure 70. Addition of timber stringers.

Table 19. Cost data for adding a supplementary member.

	Case 1 30-ft Span*		Case 2 60-ft Span*		Case 3†	
Bid Item	Quantity	Bid Price	Quantity	Bid Price	Quantity	Bid Price
Removal of Existing Deck	L.S.‡	$10,000	L.S.	$15,000	L.S.	$2,500
Structural Steel	3,715 lbs	$0.80/lb	12,150 lbs	$0.75/lb	25,020 lbs	$0.70/lb
Reinforcing Steel	4,830 lbs	$0.35/lb	9,540 lbs	$0.34/lb	19,080 lbs	$0.33/lb
Structural Concrete	22.3 cu yd	$200/cu yd	43.2 cu yd	$180/cu yd	86.4 cu yd	$175/cu yd
Mobilization	L.S.	$6,000	L.S.	$8,000	L.S.	$10,000

*Simply supported.

†Two adjacent, simply supported, 60-ft spans.

‡Lump sum.

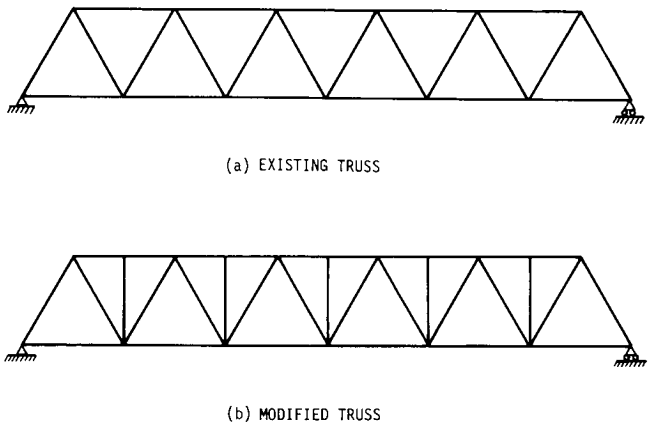

Figure 71. Adding supplementary members to a truss frame.

3.7.2 Adding or Replacing Members in Truss Frames

3.7.2.1 Adding Supplementary Members

3.7.2.1.1 Description. Adding supplementary members to truss frames is most commonly applied to Warren and Pratt trusses (*277*). Figure 71 illustrates a method of subdividing a Warren truss with supplementary members (*374*). The supplementary members are normally most effective in reducing the unbraced length of the top chord members, which thereby increases the load capacity of these compression members by 15 percent to 20 percent. In addition, the supplementary members normally can be installed without the requirement to limit traffic on the structure during construction.

If the top chord members are strengthened by reducing their effective length in the plane of the truss, additional lateral bracing may be required to reduce their effective length in the plane perpendicular to the truss. It is also important that the existing connections and bottom chord members be analyzed to ensure they are capable of carrying additional loads. Connections will obviously need to be added or modified to support the new members.

Sabnis (*277*) estimated the costs for strengthening typical Pratt Truss Bridges from HS15 to HS20 load capacity by adding supplementary members as follows:

A. Basic construction costs $14 to $15 per sq ft
B. Basic construction costs including design fee and traffic maintenance during construction $28 to $35 per sq ft
C. Total cost including design and installation of new lightweight deck $49 to $67 per sq ft

The span length for the cost estimates ranged between 95 ft and 155 ft.

3.7.2.1.2 Design procedure. A thorough structural analysis will have to be performed in order to properly size the new members. Note that the modified truss is normally an indeterminate structure.

3.7.2.2 Replacing Truss Members

The replacement of truss members is normally a repair procedure reserved for damaged and deteriorated members. Replacement procedures for truss members are well documented and the manual user is referred to these (*32, 343, 278, 290*). If member replacement is undertaken as a means of strengthening, a thorough structural analysis of the truss is critical to assure that replacement of a member with a stronger member will actually result in increased truss capacity.

Temporary support is an essential factor in replacement operations. Temporary support for tension members is most easily provided by cables or bars placed next to the member (Fig. 61). The temporary members should be placed symmetrically so as to minimize the effects of eccentricity at the panel joint. The splint type device (Fig. 58) of Section 3.6.1 can be used if a diagonal member requires replacement. In all cases, the structural integrity and the retention of panel shape will need to be analyzed prior to removing the existing member.

3.7.3 Doubling of a Truss

3.7.3.1 Steel Arch Superposition on a Through-Truss Bridge

3.7.3.1.1 Description. A method for strengthening steel through-truss bridges by reinforcing the existing truss with an auxiliary steel arch is shown in Figure 72 (*155*). A lightweight arch is capable of carrying significant loads if sufficient lateral support is provided. By superimposing the arch onto the truss, lateral support for the arch is provided by the truss, and the arch carries part of the dead and live loads carried by the truss.

There are two methods of attaching the steel arch to the truss. The first method, shown in Figure 72, involves adding floor beams and hangers between the existing floor beams and connecting the arch to the new hangers. The advantage of adding new floor beams and hangers between the existing floor beams is that a more uniform load distribution is obtained throughout the structural system, and the new floor beams will increase the load-carrying capacity of the existing stringers and floor beams.

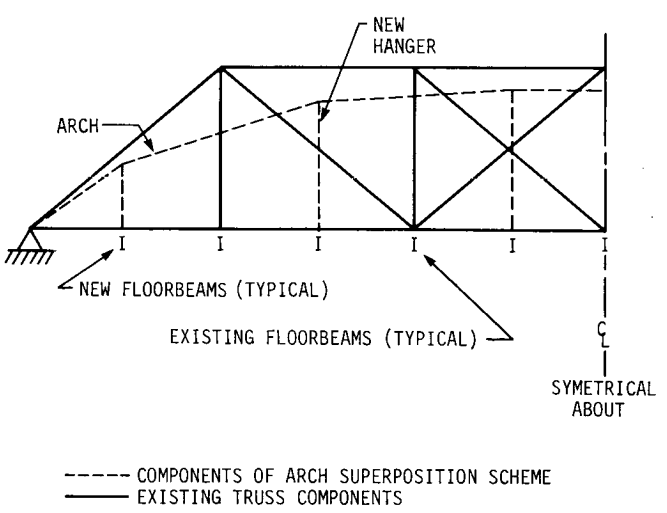

Figure 72. Schematic of arch superposition scheme.

The second method involves attaching new hangers and the arch to the existing floor beams. This method may be preferred if the existing floor beams and stringers have the load-carrying capacity desired.

3.7.3.1.2 Applicability, advantages, and disadvantages. There are several advantages to this strengthening method:

1. Adding steel arches provides a global strengthening method versus a localized strengthening procedure obtained from individual member strengthening. In many strengthening procedures, each individual weak link in the structural system is strengthened until the desired load-carrying capacity of the bridge is achieved. However, with the superposition of steel arches, the carrying capacity of the entire structure is upgraded, without the time-consuming and tedious effort required to strengthen several individual truss members.

2. The installation of the proposed strengthening system requires only the addition of the arch and possibly new hangers and floor beams; no parts need to be removed from the existing structure. Thus, there is no need for temporary shoring or jacking during construction.

3. Little traffic disruption will result during construction of the steel arches. Since no parts are to be removed from the existing structure, the bridge will still be capable of carrying its normal live loads. In addition, the disruption to traffic may be further minimized due to the potentially short duration of the work required at the bridge site. This short duration construction period will be possible if the majority of the parts required for the arch system are prefabricated and connected at the site.

4. The construction of the steel arch requires no special tools or equipment. Therefore, small local contractors or local maintenance crews can perform the installation.

There are potential problems with this strengthening method, however. An adequate substructure will be required to carry the increase in live load. This may be a critical factor in applying the arch reinforcing procedure, because a significant increase in live load may require extensive upgrading of the abutments and/or piers that support the structure. In addition, there will be no improvement made to the geometry of the existing bridge, normally a critical problem for through-truss bridges. If the bridge geometry is very poor, this will severely reduce the bridge's sufficiency rating, which may make the obtaining of federal rehabilitation funding very difficult.

3.7.3.1.3 Cost information. The cost of adding steel arches can be expected to range between $1,000 to $1,500 per linear foot (for both trusses). Table 20 summarizes bridges strengthened by this method and includes the strengthening results obtained and the respective cost of each project.

3.7.3.1.4 Design procedures. There are two methods available to the bridge engineer in the design of the reinforcing arch. Both methods depend on the structural capacity of the existing floor beams and stringers.

In Design Procedure 1, the structural capacity of the existing floor beams and stringers is assumed to be adequate to meet the desired increase in live-load capacity. In this case, additional floor beams will not be required, and the arch support system

Table 20. Cost data for strengthening existing bridges by arch superposition.

Location	Original Capacity (T)	New Capacity (T)	Length (ft)	Truss Type	Total Cost	Year	Comments
Coudersport, Pa.	3	20	74	Pratt Truss (1882)	$65,000	1983	
Elysburg, Pa.	5	20	66	Pratt Truss (1903)	$48,000	1984	
Eastern Kentucky	10	36	139	Pratt Truss	$165,000	1984	Cost includes a new 5" timber floor. Costly right-of-way problems would have required a single lane replacement structure.
Riggins, Idaho	10	36	258	Center Truss w/nonparallel chords on 40 ft slender piers w/4 approach spans	$258,000	1985	Cost includes rehabilitation of the approach spans.
Cortland, N.Y.	5	36	158	Pratt Truss (1905)	$240,000	1985	Cost includes modification of the approaches.
Falls Village, Conn.	Closed	20	127	Nonstandard (1903)	$180,000	1985	Cost includes embankment work, etc.

is attached to the truss at the existing truss verticals. A conservative approach is to design the arch to carry the dead load of itself and the truss, as well as the full design live load. If the capacity of the existing verticals is insufficient, strengthening of the verticals or adding supplemental hangers may be required.

In Design Procedure 2, the structural capacity of the existing floor beams and stringer system is assumed to be inadequate to meet the desired live-load capacity. This requires the placement of new floor beams at the midpoints of existing floor beams to increase effectively the capacity of the stringers. The existing floor beams, if inadequate, will require strengthening by another method (e.g., steel cover plates). The existing stringers can be analyzed as two-span continuous beams, with the new floor beam providing the midspan support. Hangers are attached to the new floor beams, and the arch is also connected to the existing verticals. The arch may be designed to carry the dead load of itself and the truss, as well as the full design live load. This method of design has the advantage of ensuring a stable load-carrying structural system even if the truss should fail prematurely. However, in the determination of the load-carrying capacity of the structural system, the analysis of the arch and truss should be carried out separately, with the two-span continuous stringers providing the loads to each.

Both strengthening procedures may require the end panel verticals to be strengthened to ensure adequate lateral support is provided to the arch. In addition, an alternative method to transfer load to the arch is to post-tension the arch along the bottom chords. Post-tensioning will also reduce the horizontal force transferred by the arch to the abutments.

3.7.3.2 Superimposing a Bailey Bridge

3.7.3.2.1 Description. Superimposing Bailey trusses onto pony-truss or through-truss bridges is a temporary strengthening method that has been used in Canada and Australia (*21, 107*). The Bailey bridge is a prefabricated, pin-connected modular bridge system that has been in existence for many years and has seen widespread military use. The Bailey truss is normally placed adjacent to each existing truss on the inside of the bridge as shown in Figure 73. In most situations, the Bailey trusses will be a few feet longer than the existing trusses and are supported by the bridge abutments. The Bailey trusses are then connected by hangers to the existing floor beams (additional floor beams may be added and connected to the Bailey truss if the bridge's stringers are inadequate), and the hanger bolts are tightened until the existing truss shows a sign of movement, indicating complete interaction between the Bailey truss and the existing truss. Lateral support for the Bailey truss is provided by the existing truss.

The Bailey bridge is widely available, requires no special erection equipment, and can be quickly installed by local maintenance crews. Newer types of prefabricated bridges, such as Acrow Panel bridges and Mabey Universal bridges, can also be used to supplement existing trusses. Existing trusses can be reinforced by use of single, double, or triple Bailey assemblies, depending on the strength required (*335*). Additional strength may be provided by bolting reinforcing chords to the top and bottom chords of the Bailey bridge panels. Bailey bridges may also be used to strengthen other bridge types if adequate lateral support for the Bailey truss assembly is provided.

The main disadvantage to using Bailey bridges on most trusses

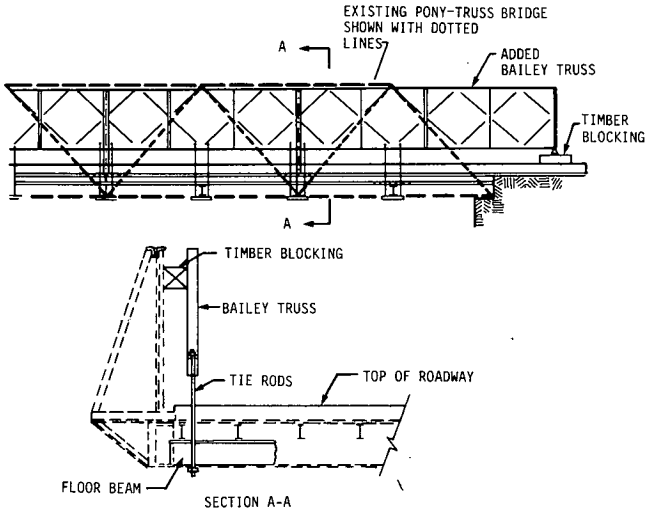

Figure 73. Reinforcing of a pony-truss bridge with Bailey trusses.

is that the assembly details require the Bailey trusses to be placed inside the existing trusses, further restricting the bridge's roadway width. The Bailey bridge also requires frequent service inspections because of susceptibility to fatigue cracking around the sway brace slots (*107*). In addition, single Bailey trusses are susceptible to lateral buckling. Using a double or triple Bailey truss and providing adequate lateral bracing should eliminate this problem.

Cost estimates were obtained from the Iowa DOT for strengthening a typical 70-ft pony-truss bridge (*139*). The pony-truss bridge was reinforced with single Bailey trusses and three additional floor beams. Quantities and costs are given in Table 21.

3.7.3.2.2 Design and analysis procedure. A design procedure is outlined and pertinent structural properties for the Bailey bridge are given in Tables 22 and 23.

1. Determine additional moment capacity required of Bailey truss.
2. Determine initial Bailey truss assembly that meets required moment capacity by using Figure 74.

Table 21. Cost data for Bailey truss superposition of a pony-truss bridge.

Bid Item	Quantity	Bid Price
Mobilization	L.S.*	$2,000
Remove Floor Bracing	L.S.	$1,500
Erect Temporary Bracing	L.S.	$1,800
Truss Connections	L.S.	$280
Structural Steel	15,000 lbs	$0.70/lb
Bailey Bridge Panels	16 panels	$980/panel

*Lump sum.

Table 22. Structural section properties for Bailey bridge trusses.*

Bailey Bridge Truss Type	Moment of Inertia (in.^{4})	Section Modulus (in.^{3})	Weight (lb/ft)
Single Single	6,800	223	68.9
Single Single Reinforced	13,600	446	117
Double Single	15,650	453	136
Double Single Reinforced	20,400	669	232
Triple Single	31,300	906	200
Triple Single Reinforced	46,950	1,359	345

*Values from Reference (84).

Table 23. Structural material properties for Bailey bridge trusses.*

Ultimate Tensile Strength	78-90 ksi
Yield Stress	51.5 ksi
Modulus of Elasticity	30.2×10^3 ksi
Shear Capacity	33.7 k

*Values from Reference (84).

3. Replace the existing truss with a beam of equivalent flexural rigidity.
4. Replace the selected Bailey truss with a beam of equivalent flexural rigidity.
5. Consider adding additional floor beams between existing ones if bridge stringers are inadequate, and connect the Bailey truss to old and new floor beams.
6. Connect the two trusses rigidly at the points of application of the loads so that they share the load in such a way that both deflect simultaneously an equal amount. The loads taken by each truss can then be determined based on the deflected values and flexural rigidities. If the Bailey truss is inadequate, return to Figure 74 and select another truss type.
7. Check required shear capacity.
8. Design hangers, lateral bracing, and bearing supports.

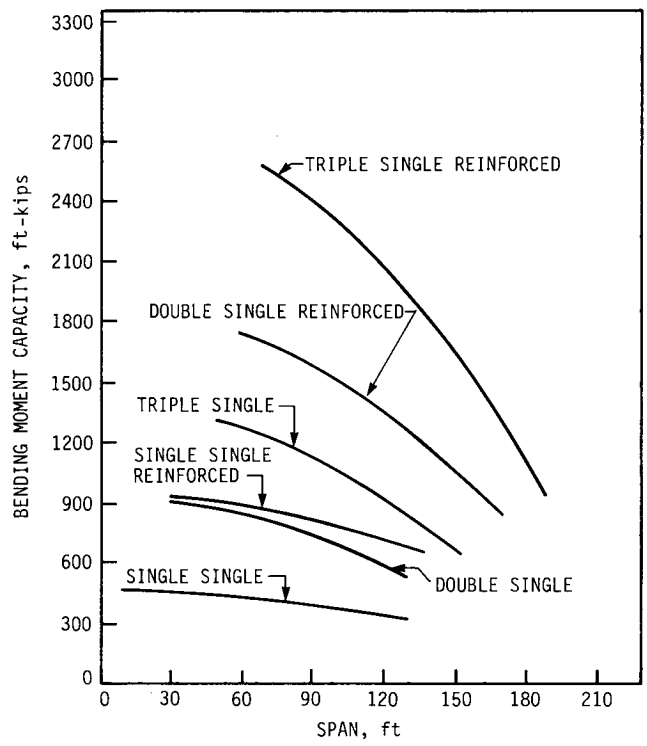

Figure 74. Bailey truss bending moment capacity.

3.8 Post-Tensioning Various Bridge Components

3.8.1 Description

Since the 19th century, timber structures have been strengthened by means of king post and queen post-tendon arrangements. The king post and queen post are forms of strengthening by post-tensioning that are still used today, but since the 1950s, post-tensioning has been applied as a strengthening method in many more configurations to almost all common bridge types. A review of the engineering literature revealed that approximately half of the reported uses of post-tensioning for bridge strengthening have been implemented during the current decade. The impetus for the recent surge in post-tensioning strengthening is undoubtedly due to its successful history of more than 30 years and the current need for strengthening of bridges in many countries.

Post-tensioning can be applied to an existing bridge to meet a variety of objectives. Post-tensioning can relieve tension overstresses with respect to service load and fatigue-allowable stresses. These overstresses may be axial tension in truss members or tension associated with flexure, shear, or torsion in bridge stringers, beams, or girders. The amount of stress relief varies but can be a moderate amount such as 6 ksi, as indicated in the example in a following section, or sufficient to raise a bridge live-load capacity from an H15 truck to an HS20 truck.

Post-tensioning also can reduce or reverse undesirable displacements. These displacements may be local, as in the case of cracking, or global, as in the case of excessive bridge deflections. Although post-tensioning is generally not as effective with respect to ultimate strength as with respect to service-load-allowable stresses, it can be used to add ultimate strength to an existing bridge. It is possible to use post-tensioning to change the basic behavior of a bridge from a series of simple spans to continuous spans. All of these objectives have been fulfilled by post-tensioning existing bridges, as documented in many papers in the engineering literature.

Most often post-tensioning has been applied with the objective of controlling longitudinal tension stresses in bridge members under service-loading conditions. Figure 75 illustrates the axial forces, shear forces, and bending moments that can be achieved with several simple tendon configurations. The concentric tendon in Figure 75(a) will induce an axial compression force that, depending on magnitude, can eliminate part or all of an existing tension force in a member or even place a residual compression force sufficient to counteract a certain amount of tension force

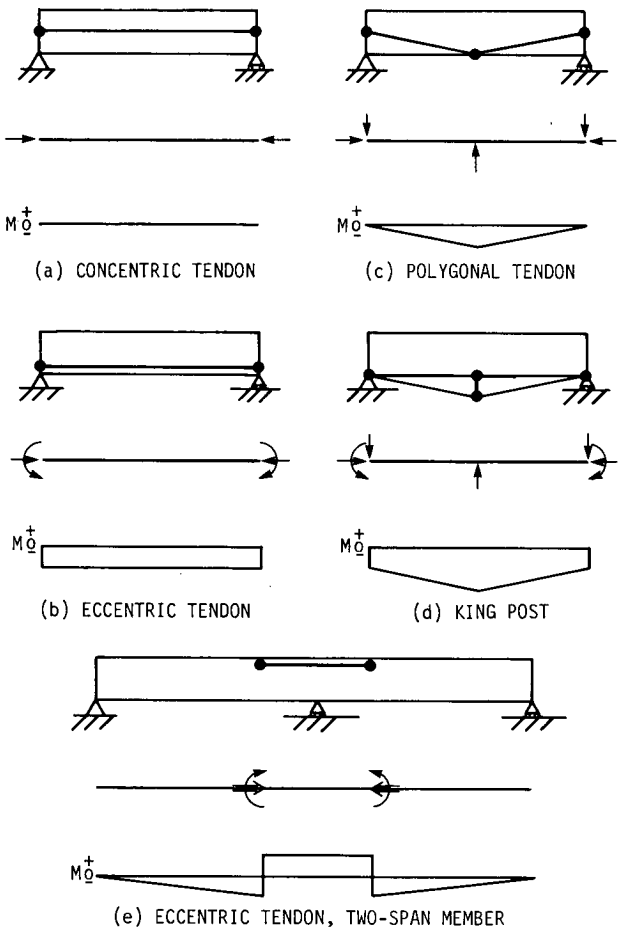

Figure 75. Forces and moment induced by longitudinal post-tensioning.

under other loading conditions. The amount of post-tensioning force that can safely be applied, of course, is limited by the residual-tension dead-load force in the member.

The tendon configuration in Figure 75(a) generally would be used only for tension members in trusses, whereas the remaining tendon configurations in Figure 75 would be used for stringers, beams, and girders. The eccentric tendon in Figure 75(b) induces both axial compression and negative bending. The eccentricity of the tendon may be varied to control the proportions of axial compression versus bending applied to the member. Length of the tendon also may be set to apply the post-tensioning to only the most highly stressed portions of the member. The polygonal tendon profile in Figure 75(c) also induces axial compression and negative bending, but the negative bending is nonuniform within the post-tensioned region. Locations of bends in the tendon and eccentricities of the attachments at the bends can be set to control the moments caused by the post-tensioning. The polygonal tendon also induces shear forces that are opposite to those applied by live and dead loads.

The king post tendon configuration in Figure 75(d) is a combination of the eccentric and polygonal tendon configurations. Because the post is beyond the profile of the original member, the proportion of moment to axial force induced in the member to be strengthened will be large.

The tendon configuration in Figure 75(e) is an eccentric tendon attached over the central support of a two-span member. In this configuration the amount of positive moment applied in the central support region depends not only on the force in the tendon and its eccentricity, but also on the locations of the anchorages on the two spans. If the anchorages are moved toward the central support, the amount of positive moment applied will be greater than if the anchorages are moved away from the central support. This fact and the fact that there is some distribution of moment and force among parallel post-tensioned members has not always been correctly recognized, and there are published errors in the literature.

The axial force, shear force, and bending moment effects of post-tensioning described above have enough versatility in application so as to meet a wide variety of strengthening requirements. Probably this is the only strengthening method that can actually reverse undesirable behavior in an existing bridge rather than provide a simple patching effect. For both these reasons, post-tensioning has become a very commonly used repair and strengthening method.

3.8.2 Applicability and Advantages

Post-tensioning has many capabilities: to relieve tension, shear, bending, and torsion-overstress conditions; to reverse undesirable displacements; to add ultimate strength; to change simple span to continuous span behavior. In addition, post-tensioning has some very practical advantages. Traffic interruption is minimal; in some cases, post-tensioning can be applied to a bridge with no traffic interruption. Few site preparations, such as scaffolding, are required. Tendons and anchorages can be prefabricated. Post-tensioning is an efficient use of high strength steel. If tendons are removed at some future date, the bridge will generally be in no worse condition than before strengthening.

To date, post-tensioning has been used to repair or strengthen most common bridge types. Most often post-tensioning has been applied to steel stringers, floor beams, girders, and trusses, and case histories for strengthening of steel bridges date back to the 1950s. Since the 1960s, external post-tensioning has been applied to reinforced concrete stringer and tee bridges. In the past 10 years, external post-tensioning has been added to a variety of prestressed, concrete-stringer and box-beam bridges. Many West German prestressed concrete bridges have required strengthening by post-tensioning recently due to construction joint distress. Post-tensioning even has been applied to a reinforced concrete slab bridge by coring the full length of the span for placement of tendons (*264*).

Known applications of post-tensioning will be idealized and summarized as Schemes A through L in Figures 76 through 80. Typical schemes for stringers, beams, and girders are contained in Figure 76. The simplest and, with the exception of the king post, the oldest scheme is Scheme A: a straight, eccentric tendon shown in Figure 76(a). Lee reported use of the eccentric tendon for strengthening of British cast iron and steel highway and railway bridges in the early 1950s (*179*). Since then Scheme A has been applied to many bridges in Europe, North America, and other parts of the world. Scheme A is most efficient if the tendon has a length less than that of the member, so that the full post-tensioning negative moment is not applied to regions with little dead-load moment. The variation on Scheme A for

continuous spans, Scheme AA in Figure 76(e), has been reported in use for deflection control or strengthening in West Germany (*148*) and the United States (*196*) since the late 1970s.

The polygonal tendon, Scheme B in Figure 76(b) and its extension to continuous spans, Scheme BB in Figure 76(f), has been in use since at least the late 1960s. Vernigora et al. reported the use of Scheme BB for a five-span, reinforced-concrete tee bridge in 1969 (*351*). The bridge over the Welland Canal in Ontario, Canada, was converted from simple-span to continuous-span behavior by means of external post-tensioning cables. Scheme BB has since been reported in various forms in France (*217*), West Germany (*96*), and New Zealand (*38*).

Scheme C in Figure 76(c) provided the necessary strengthening for a steel plate, girder railway bridge in Czechoslovakia in 1964 (*99*). The tendons and compression struts for the bridge were fabricated from steel tee sections, and the tendons were stressed by deflection at bends rather than by elongation as is the usual case. The tendons for the plate girder bridge were given a three-segment profile in order to apply upward forces at approximately the third points of the span, so that the existing dead load moments could be counteracted efficiently. In the late 1970s in the United States, Kandall (*151*) recommended use of Scheme C for strengthening because it does not place additional axial compression in the existing structure. For other schemes, the additional axial compression induced by post-tensioning will add compression stress to regions that may be already overstressed in compression.

Scheme D in Figure 76(d), the king post (or queen post with two posts), is quite probably the oldest form of post-tensioning for strengthening of stringers, because it exists today in timber bridges constructed before 1900. The king post scheme was used in Minnesota in 1975 to temporarily strengthen a steel stringer bridge (*31*). It was possible to economically strengthen that bridge with scrap timber and cable for the last few years of its life before it was replaced.

The tendon schemes in Figure 76, in general, appear to be very similar to reinforcing bar patterns for concrete beams. Thus, it is not surprising that post-tensioning also has been used for shear strengthening, in patterns very much like those for stirrups in reinforced-concrete beams. Scheme E in Figure 77(a) illustrates a pattern of external stirrups for a beam in need of shear strengthening. Types of post-tensioned external stirrups have been used or proposed for timber beams (*343*), reinforced concrete beams (*365*) and, as illustrated in Figure 77(b), for prestressed concrete box girder bridges (*10*). (External stirrups are discussed in more detail in Section 3.6.2.

Post-tensioning was first applied to steel trusses for purposes of strengthening in the early 1950s (*179*), at about the same time that it was first applied to steel stringer and steel-girder, floor-beam bridges. Typical strengthening schemes for trusses are given in Figure 78. Scheme F, concentric tendons on individual members, shown in Figure 78(a), was first reported for the proposed strengthening of a cambered-truss bridge in Czechoslovakia in 1964 (*99*). For that bridge it was proposed to strengthen the most highly stressed tension diagonals by post-tensioning. Scheme F tends to be uneconomical because it requires a large number of anchorages, and very few truss members benefit from the post-tensioning.

Scheme G in Figure 78(b), a concentric tendon on a series of members, has been the most widely used form of post-tensioning for trusses. Lee describes the use of this scheme for British railway bridges in the early 1950s (*179*), and there have

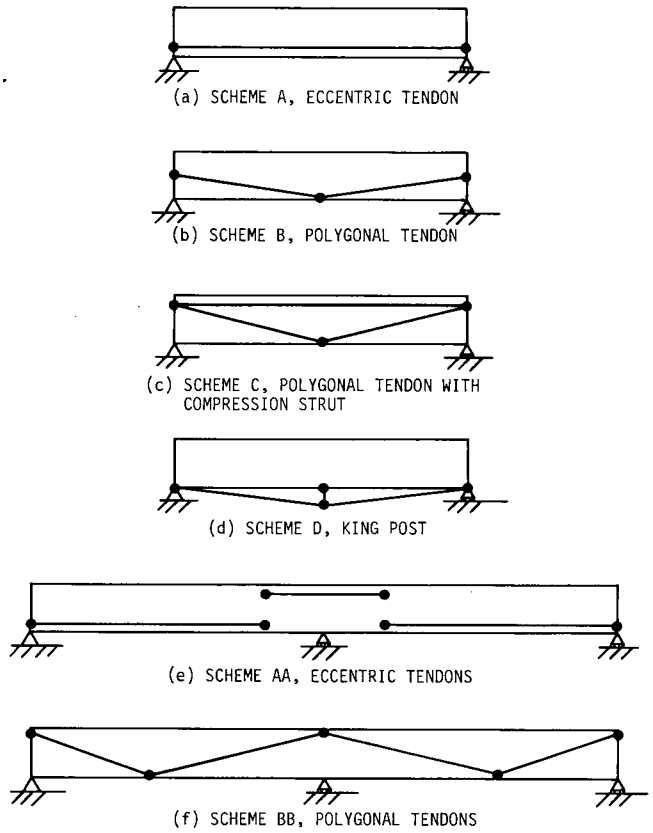

Figure 76. Tendon configurations for flexural post-tensioning of beams.

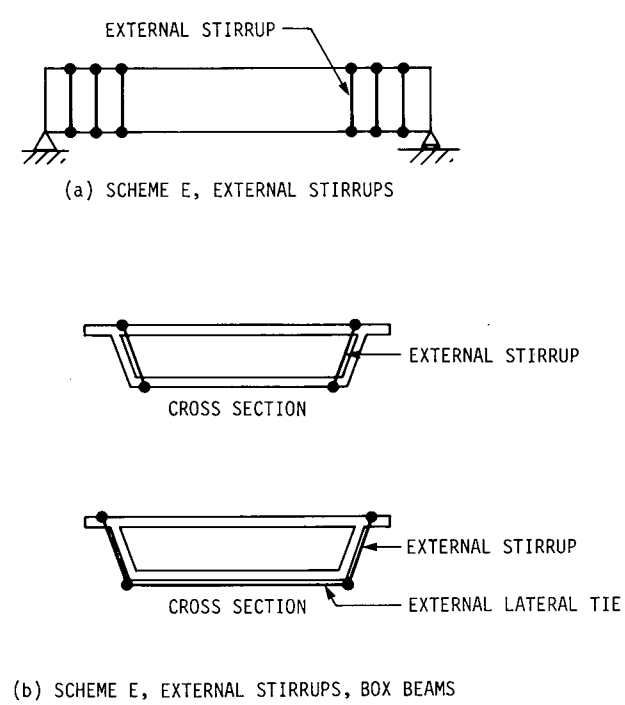

Figure 77. Tendon configurations for shear post-tensioning.

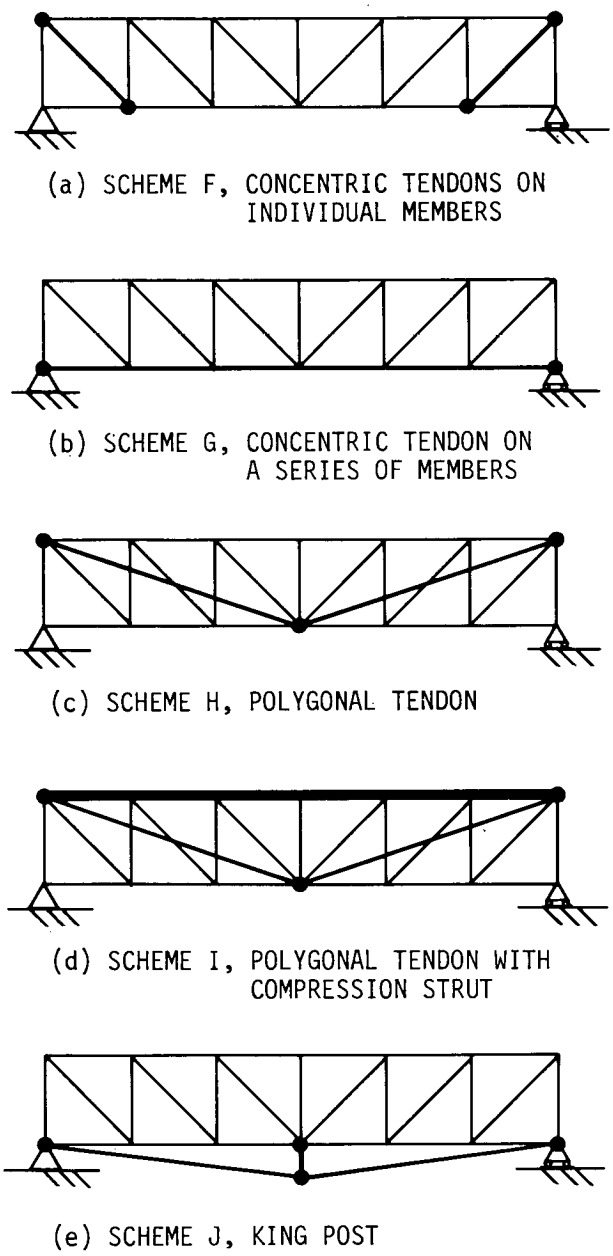

Figure 78. Tendon configurations for post-tensioning trusses.

been a considerable number of bridges strengthened with this scheme in both Western and Eastern Europe.

The polygonal tendon in Scheme H, Figure 78(c), has not been reported for strengthening purposes, but it has been used in the continuous span version of Scheme I in Figure 78(d) for a two-span truss bridge in Switzerland (*220*). In the late 1960s, a truss highway bridge in Aarwangen, Switzerland, was strengthened by means of four-segment tendons on each of the two spans. The upper chord of each truss was unable to carry the additional compression force induced by the post-tensioning and, therefore, a free-sliding compression strut was added to each top chord to take the axial post-tensioning force.

Scheme J, the king post (or queen post) in Figure 78(e), has been suggested for new as well as existing trusses (*277*); however, cases of its actual use for strengthening have not been reported in the literature. Because most trusses are placed on spans greater than 100 ft, the posts below the bridge could extend down quite far and severely reduce clearance under the bridge. The king post or queen post would thus be in a very vulnerable position and would not be a wise choice for many bridges.

Most uses of post-tensioning for strengthening purposes have been with respect to longitudinal members in bridges, but post-tensioning also has been used for strengthening in the transverse direction. After the deterioration of the lateral load distribution characteristics of laminated timber decks was noted in Canada in the mid-1970s, a research program was undertaken for strengthening of those decks (*347, 333*). Scheme K in Figure 79(a) illustrates the strengthening method proposed and used. A continuous-steel channel waler at each edge of the deck spreads the post-tensioning forces from threadbar tendons above and below the deck, thereby preventing local overstress in the timber. A similar tendon arrangement was used in an Illinois bridge (*173*) to tie together spreading, prestressed-concrete box beams; this is shown in Figure 79(b).

Masonry-deck arch bridges with soil fill above the arches often have developed cracks at the bases of the retaining walls or longitudinally in the arches. The live loads on the roadway or railway above the fill exert lateral pressures on the retaining walls, which either causes the walls to crack directly above the arches (as a result of shear and bending overstress) or, if the walls are sufficiently strong, lateral pressures cause the arches to split. The cracks can be closed, and the bridge can be strengthened for larger live loads by transverse post-tensioning arranged as shown in Scheme L (Fig. 80). Scheme L has been reported for strengthening British railway bridges in the 1950s (*364*) and a French bridge in the late 1960s (*170*).

In addition to the applications reviewed above, post-tensioning also has been used to compensate for removal of bridge supports (*212, 173*), strengthening of hammerhead piers (*173*), and adjusting of the position of the substructure for an arch bridge (*286*). Post-tensioning also has been used to realign one

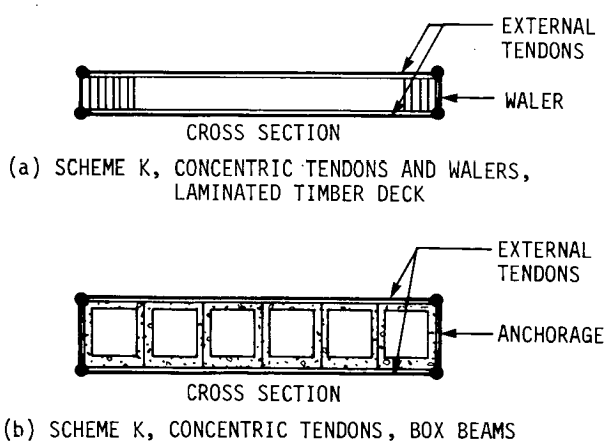

Figure 79. Tendon configuration for transverse post-tensioning of decks.

of the trusses in a Canadian bridge so that the fractured lower chord could be spliced (*27*). The overview of uses of post-tensioning for bridge strengthening given above identifies the most important concepts that have been used in the past and indicates the versatility of post-tensioning as a strengthening method.

3.8.3 Limitations and Disadvantages

When post-tensioning is used as a strengthening method, it increases the allowable stress range by the magnitude of the applied post-tensioning stress. If maximum advantage is taken of the enlarged allowable-stress range, the factor of safety against ultimate load will be reduced. The ultimate load capacity thus will not increase at the same rate as the allowable-stress capacity. For short-term strengthening applications, the reduced factor of safety should not be a limitation, especially in view of the recent trend toward smaller factors of safety in design standards. For long-term strengthening applications, however, the reduced factor of safety may be a limitation.

At anchorages and brackets where tendons are attached to the bridge structure, there are high local stresses that require consideration. Any cracks initiated by holes or expansion anchors in the structure will spread with live-load dynamic cycling.

Because post-tensioning of an existing bridge affects the entire bridge (beyond the members which are post-tensioned), consideration must be given to the distribution of the induced forces and moments within the structure. If all parallel members are not post-tensioned, if all parallel members are not post-tensioned equally, or if all parallel members do not have the same stiffness, induced forces and moments will be distributed in some manner different from what is assumed in a simple analysis.

Post-tensioning does require relatively accurate fabrication and construction and relatively careful monitoring of forces locked into the tendons. Either too much or too little tendon force can cause overstress in the members of the bridge to be strengthened.

Tendons, anchorages, and brackets require corrosion protection because they are generally in locations that can be subjected to salt-water runoff or salt spray. If tendons are placed beyond the bridge profile, they are vulnerable to damage from overheight vehicles passing under the bridge or vulnerable to damage from traffic accidents. Exposed tendons also are vulnerable to damage from fires associated with traffic accidents.

3.8.4 General Cost Information

Strengthening by post-tensioning can cost up to 50 percent of replacement costs (*264*). The higher costs have resulted when construction procedures were complex and tedious, such as for coring longitudinally in a bridge deck to place tendons. In general, post-tensioning costs are much lower than 50 percent of replacement. In the United States, costs for post-tensioning bridge members of 100-ft length or less range from $3,500 per beam to $25,000 per beam including contractor mobilization and traffic control. The lower cost is for post-tensioning many steel stringers at one site; the higher cost is for post-tensioning two, prestressed-concrete stringers at one site.

Because strengthening by post-tensioning is relatively new in the United States, especially in some regions, contractors may submit relatively high bids with respect to general cost estimates.

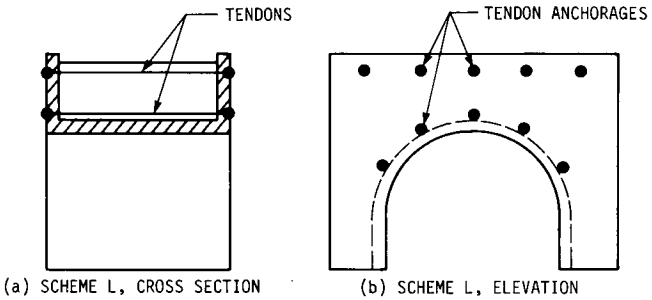

Figure 80. Tendon configuration for transverse post-tensioning of deck arches.

Some educational programs in those regions may be desirable in order to remove some of the uncertainty from the construction procedures.

Post-tensioning may require more inspection and monitoring on the part of the bridge owner. Those inspection and monitoring costs, of course, are in addition to the construction contract price.

3.8.5 Design Procedures

In general, strengthening of bridges by post-tensioning can follow established structural analysis and design principles. The engineer must be cautious, however, to apply correctly the empirical design procedures as they are established only for conditions of the strengthening problem.

Every strengthening problem requires careful examination of the existing structure. Those existing materials were produced to some previous set of standards and may have deteriorated due to exposure over many years. The existing steel in steel members may not be weldable with ordinary procedures, and steel shapes are not likely to be dimensioned to current standards. Shear connectors and other parts may have unknown capacities due to unusual configurations.

Strengthening an existing bridge involves more than strengthening individual members. Even a simple-span bridge is indeterminate, and post-tensioning and other strengthening will affect the behavior of the entire bridge. If the indeterminate nature of the bridge is not recognized during analysis, the post-tensioning applied for strengthening purposes may not have the desired stress-relieving effects and may actually cause overstress.

Post-tensioning involves application of relatively large forces to regions of a structure that were not designed for such large forces. There is more likelihood of local overstress at tendon anchorages and brackets than at conventional member connections. Brackets need to be designed so as to spread the concentrated post-tensioning forces over sufficiently large portions of the existing structure. Researchers in several cases have modified anchorage and bracket details to eliminate local overstress, after the overstress became apparent.

Members and bridges subjected to longitudinal post-tensioning will shorten axially and, depending on the tendon configuration, also will shorten and elongate with flexural stresses. These shortening and elongation effects must be allowed for, so that the post-tensioning has its desired effect. Frozen bridge

bearings require repair and lubrication, and support details should be checked for restraints.

External tendons, whether cable or threadbar, are relatively vulnerable to corrosion, damage from overheight vehicles, traffic accidents, or fires associated with accidents. Corrosion protection and placement of the tendons are thus very important with respect to the life of the post-tensioning. Safety is also a consideration because a tendon that ruptures suddenly can pose a hazard.

In the following section, after an introductory review of post-tensioning concepts for Scheme A post-tensioning, a design procedure for strengthening of steel-stringer bridges will be given. Following the design procedure there is a design example for a relatively complex strengthening problem. The bridge in the example is a composite, concrete-deck steel-stringer bridge with undersize exterior stringers. Because only the exterior stringers are to be strengthened by post-tensioning, the distribution of axial force and moment away from those members is significant and is considered in the example.

3.8.5.1 Longitudinal Post-Tensioning of Stringers

3.8.5.1.1 Description. Strengthening of a simple-span stringer by post-tensioning under allowable-stress design requires consideration of allowable stresses for both positive and negative bending moment. If a bridge stringer is attached to the deck at relatively close intervals, it will have a laterally supported top flange, which permits full allowable positive moment, and the stringer will have a limiting yield moment, as shown in Figure 81(a). In most situations the lower flange of the stringer will be unsupported laterally, except at abutments and intermediate diaphragms. The wide spacing of lateral supports will lower the allowable negative moment, and the limiting moment will be due to lateral buckling, as shown in Figure 81(a).

For an existing stringer, a portion of the allowable positive moment will be utilized for dead load, as shown in Figure 81(b). In many bridges, approximately half of the allowable moment will be utilized for dead load at midspan. The factor of safety for positive moment is as indicated in Figure 81(b), and under the AASHTO bridge design specifications (*4*), the factor of safety is 1.82.

At any location along the stringer, the maximum allowable post-tensioning moment (neglecting axial compression) is as shown in Figure 81(b). Thus, a higher post-tensioning moment can be applied near midspan than at the supports because the dead-load moment is higher near midspan. The optimum length for the post-tensioned region will vary from approximately 50 percent to 80 percent of the span length, depending on the magnitude of the dead load and characteristics of the live load.

When maximum, allowable post-tensioning moments are applied to the stringer as shown in Figure 81(c), the allowable negative moment goes to zero at the points of application, and the allowable positive moment is increased by the magnitude of the post-tensioning moment over the central region of the span. The yield moment also is increased but, as is indicated by the factor-of-safety computation in the figure, the factor of safety is reduced because the margin of safety above the allowable positive moment, *A*, remains the same as for the stringer without post-tensioning.

Several secondary effects alter the allowable, live-load moment within the post-tensioned region. As is indicated in Figure 81(c), some of the post-tensioning moment may be distributed

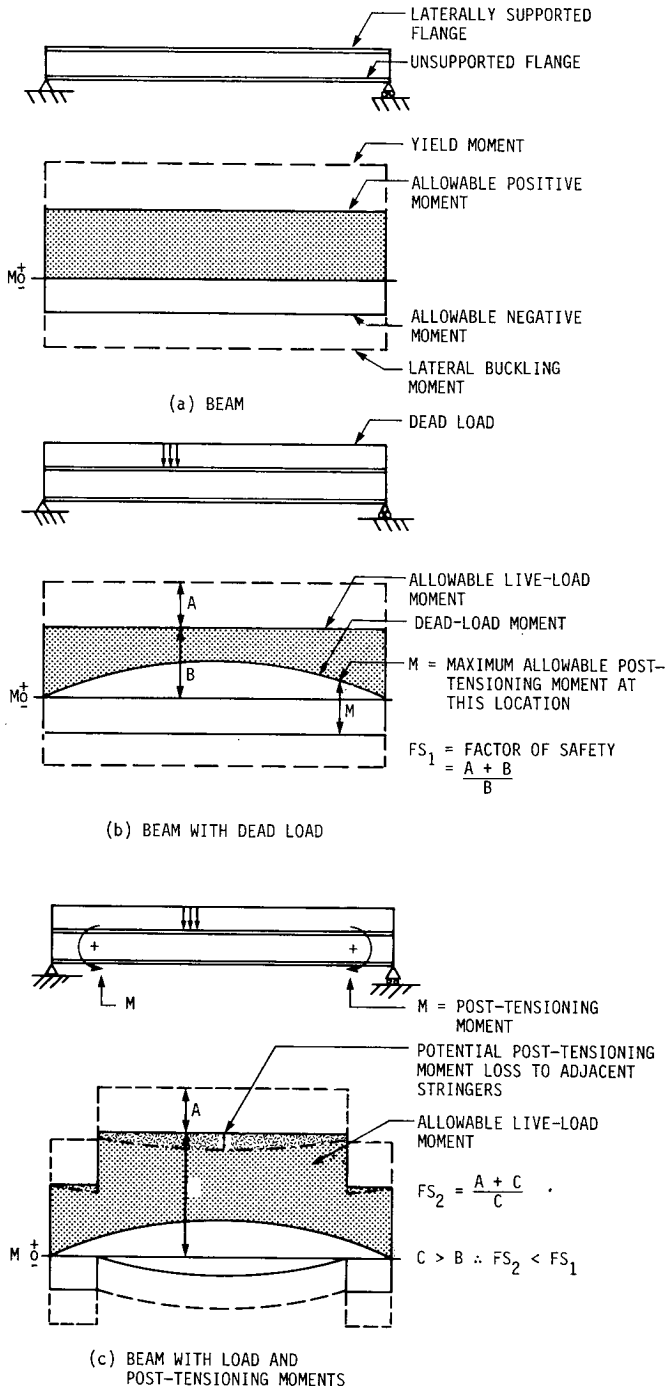

Figure 81. Allowable live-load moments for dead load and dead load plus post-tensioning moment.

away from the post-tensioned stringer. In typical bridges this loss of moment can be as much as 30 percent to 40 percent of the post-tensioning moment, if adjacent stringers are not post-tensioned.

The Scheme A tendon configuration applies both moment and axial force to the stringer at the time of post-tensioning, and the tendon is then anchored to the stringer. The stringer is then indeterminate to the first degree. When the stringer is

loaded with live load, the tendon will be stretched a small amount, which causes additional post-tensioning moment and force. This additional post-tensioning, though small, is beneficial because it occurs only with live load. The additional tendon force may be computed for stringers of constant cross section by the method derived by Hoadley (*129*) or, for stringers with partial-length cover plates, by the method derived by Dunker (*160*).

At the time of post-tensioning, the applied moment will cause the stringer to deflect upward, thus inducing additional moment due to a P-delta effect. This P-delta effect generally is small and, according to Belenya and Gorovskii (*30*), can be neglected for stringers with depth-to-span ratios greater than 1:20. Testing at Iowa State University has shown the P-delta effect to be negligible at allowable loads for a composite bridge (*160*).

As indicated parenthetically above, Figure 81 does not specifically account for the axial force, but the force does need to be considered in the design of the post-tensioning; the force is therefore considered in the example following in this section.

3.8.5.1.2 Design Procedure. The design procedure given below involves the selection of standards for which the bridge is to be strengthened, computation of overstresses and locations, design of the post-tensioning, selection of tendons, design of anchorages, and checks of all factors related to the design.

1. Determine the standards to which the bridge is to be strengthened (truck and/or lane loads, allowable stresses).
2. Determine loads and load fractions for all stringers (dead load, long-term dead load, live load, impact load).
3. Compute moments at all critical locations (dead load, long-term dead load, live and impact load).
4. Compute section properties as required (steel stringer, steel stringer with cover plate, composite stringer, composite stringer with cover plate, composite stringer with reduced modular ratio, composite stringer with cover plate and reduced modular ratio, composite stringer with respect to bridge—if stiffness of stringer or deck elevation varies, composite stringer with coverplate with respect to bridge—if stiffness of stringer or deck elevation varies).
5. Compute stress to be relieved by post-tensioning at all critical locations.
6. Design post-tensioning (tendon force, tendon eccentricity, distribution of axial forces and moments, tendon length).
7. Select tendons, accounting for losses and gain (steel relaxation, distribution errors, temperature differences between tendons and bridge, anchorage slip, force increase with live load).
8. Check stresses at all critical locations.
9. Design anchorages and brackets.
10. Check other design factors (beam shear, shear connectors, fatigue, deflection, beam flexural strength, other, as required).

With respect to the design of the post-tensioning, note that tendon force, tendon eccentricity, distribution of axial forces and moments, and tendon length are all interrelated. Eccentricity of the tendon will determine the amount of moment associated with the post-tensioning force. Length of the tendon affects distribution of axial force and moment to the members and limits the maximum force which can be applied to the tendon. As the tendon is made longer, it will traverse regions where dead-load stress is small. The minimum dead-load stress will cause the limit on the post-tensioning force. Force, eccentricity, and distribution are related by the following formula:

$$f = FF\,(P/A) + MF\,(Pec/I) \qquad (6)$$

where f = stress at extreme fiber, P = tendon force, A = area of stringer (composite area if bridge is composite), e = eccentricity of tendon with respect to stringer or bridge, c = distance to extreme fiber, I = moment of inertia of stringer (composite moment of inertia if bridge is composite), FF = force fraction (similar to load fraction for live load), and MF = moment fraction (similar to load fraction for live load).

Engineers have generally assumed that the force and moment fractions are equal to one. That assumption is approximately correct only when all parallel stringers are identical and post-tensioned with identical forces and eccentricities. For other conditions, force and moment fractions may be determined by finite element analysis. Force and moment fractions for certain three- and four-beam stringer bridges, for which only post-tensioning of undersize exterior stringers is required, are given in Ref. *91*.

3.8.5.1.3 Design example. The design example following is organized according to the procedure outlined previously and is summarized from the example in Ref. *91*. The bridge to be strengthened is the composite, concrete deck, steel stringer bridge illustrated in Figure 82. The bridge is simple span, with a distance between centers of bearing of 51 ft 3 in. Because the bridge was designed according to AASHO bridge design specifications prior to 1957, the two exterior stringers were designed for a relatively small wheel-load fraction and are thus 3 in. shallower than the two interior stringers. The deck crown caused by the difference in stringer depth is shown in Figure 82(a); the stringer sizes are given in Figure 82(b), and the diaphragm size and location are given in Figure 82(c).

In Figure 82(b), the curb is idealized as two rectangles, and the crowned deck is idealized to be level with each of the stringers. The assumed ½-in. wearing surface on the top of the deck has been neglected for the structural cross sections. The steel in the bridge met the ASTM A7 standard and is assumed to have a yield stress of 33 ksi. Strength of the concrete is unknown, but from local experience with core strength tests from similar bridges, the concrete strength may be assumed as 3,000 psi, minimum.

1. *Strengthening Standards.* The composite bridge is to be strengthened to meet legal load standards in Iowa. Iowa uses several, straight truck, semi-and-trailer, and truck-and-trailer configurations that are designed to meet maximum allowable provisions of the state law. Allowable stresses will be taken from current AASHTO bridge design and rating standards (*4*). For the A7 steel, the flexural tension and supported-compression, allowable inventory stress is 18 ksi. For the concrete, the allowable compression stress is 1,200 psi, and the allowable tension stress is 164 psi.

2. *Loads and Load Fractions.* Dead loads for exterior and interior stringers are computed as 865 lb/lin.-ft and 1,147 lb/lin.-ft respectively. Long-term dead loads, which include allowances for a new wearing surface, are 151 lb/lin.-ft for each stringer. Wheel-load fractions for exterior and interior stringers are 1.07 and 1.76. The impact increase is computed to be 0.284.

3. *Moments.* Computed bending moments for the stringers and the various loads are given in Table 24.

4. *Section Properties.* For 3,000 psi concrete, the modular ratio is taken to be nine. From the AASHTO bridge design specifications (*4*), the concrete flange widths are computed to be 58.88 in. for the exterior stringers and 90 in. for interior

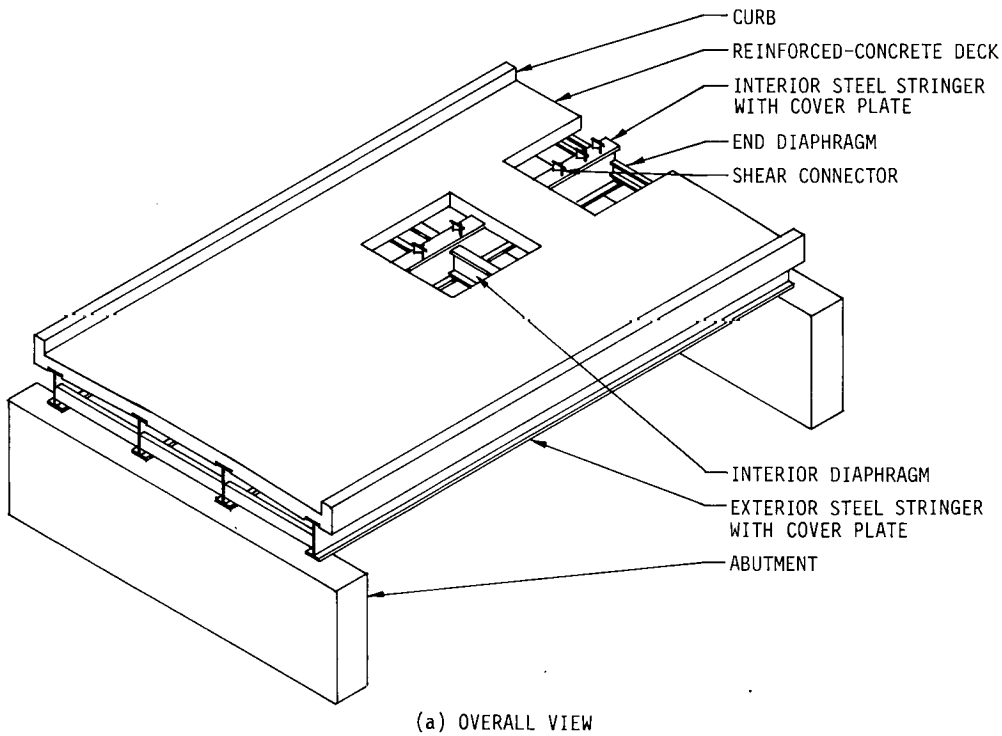

(a) OVERALL VIEW

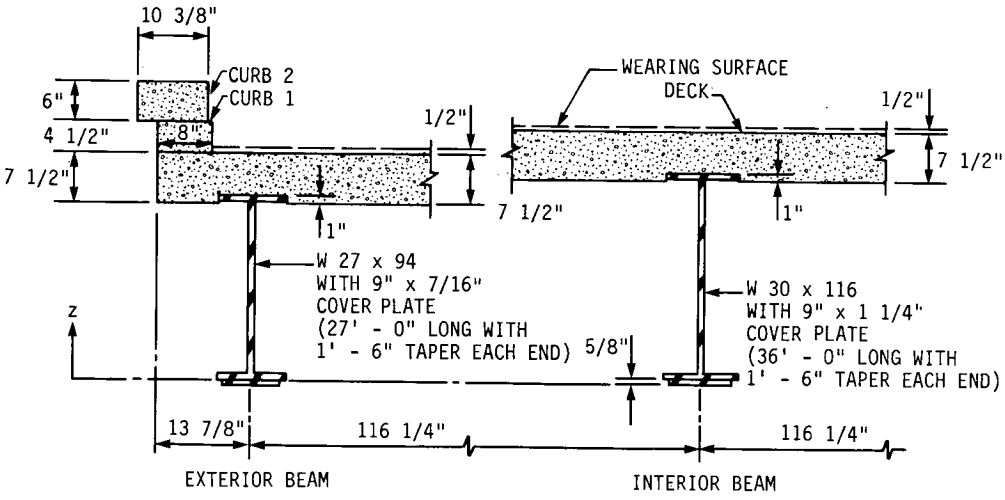

(b) IDEALIZED TRANSVERSE SECTION

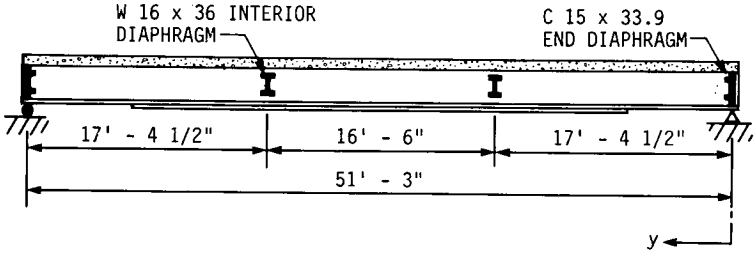

(c) IDEALIZED LONGITUDINAL SECTION

Figure 82. Isometric view composite steel-stringer deck bridge.

Table 24. Dead-load, long-term dead-load, and live-load moments.

Location, Type of Moment	Exterior Stringer Moment, ft-k	Interior Stringer Moment, ft-k
Midspan		
$y_e = y_i = 25.625$ ft		
Dead	284.00	376.58
Long-term dead	49.58	49.58
Live + impact	534.73	623.26
Coverplate Cutoff		
$y_e = 13.625$ ft		
$y_i = 9.125$ ft		
Dead	221.77	220.54
Long-term dead	38.71	29.03
Live + impact	430.71	385.78
Anchorage		
$y_e = 6$ ft		
Dead	117.42	
Long-term dead	20.50	
Live + impact	244.62	
$y_e = 2$ ft		
Dead	42.60	
Long-term dead	7.44	
Live + impact	93.65	

Table 25. Section properties for post-tensioning examples.

	Exterior Stringer		Interior Stringer	
	Centroid z, in.	I in.^{4}	Centroid z, in.	I in.^{4}
Steel beam	13.46	3,267	15.63	4,919
Steel beam with cover plate	11.75	3,916	11.76	6,999
Composite beam, n = 9	25.71	10,439	27.83	12,653
Composite beam with cover plate, n = 9	24.60	12,950	25.23	20,565
Composite beam, n = 27	20.97	7,358	23.13	9,595
Composite beam with cover plate, n = 27	19.35	8,996	19.44	14,650
Composite beam with respect to bridge, all stringers cover plated, n = 9	24.95	12,961	24.95	20,574
Composite beam with respect to bridge, interior stringers cover plated, n = 9	25.43	10,446	25.43	20,570
Composite beam with respect to bridge, no cover plates, n = 9	26.89	10,561	26.89	12,750

stringers. The centroid elevations and moments of inertia for the stringers are given in Table 25.

5. *Stress to be Relieved.* Experience with this type of bridge has shown that the maximum overstresses to be relieved are at midspan and cover-plate cutoffs of the exterior stringers. Because less post-tensioning will remain on the exterior stringers at midspan due to distribution effects, the midspan overstress is the critical one for design. Flexural tension stress at midspan is 24.33 ksi, allowable stress is 18 ksi, and stress to be relieved is therefore 6.33 ksi.

6. *Post-Tensioning Design.* In order to avoid clearance problems under the bridge, tendons will be placed above the bottom flange. Threadbars will be selected for the tendons, and hollow-core jacking cylinders for the threadbars require a clearance of approximately 3¼ in. Experience has shown that anchorages at approximately 7 percent of the span length (43 in. for this bridge) will permit two bolt holes in the bottom flange of a stringer without causing tension stress above the allowable 18 ksi. At midspan, computations in Ref. *91* give distribution fractions of 0.39 for axial force and 0.29 for moment. (These fractions give the amount of force or moment remaining on each exterior stringer with respect to the total force or moment applied to the bridge.)

The required post-tensioning force may then be computed (see Eq. 6):

$$
\begin{aligned}
f &= FF\,(P/A) + MF\,(Pec/I) \\
6.33 &= (0.39)(P/91.58) \\
&\quad + (0.29)[P(20.95)(24.95 + 0.44)/12961] \\
P &= 392 \text{ kip}
\end{aligned}
$$

and for each exterior beam $P = 392/2 = 196$ kip.

7. *Tendon Selection.* In order to ensure that the required post-tensioning is actually effective during service conditions, the computed force must be adjusted for losses and the gain due to live loads on the bridge. Adjustments to be applied to the force are

7 percent loss assumed for potential error in distribution fractions
4 percent loss assumed for relaxation of tendon steel
2 percent loss assumed for approximate 10°F temperature differential between tendons and bridge
2.5 percent gain based on truck live load

The required initial force is then $P = 196/(1 - 0.07 - 0.047 - 0.02 + 0.025) = 219$ kip. Two 150-ksi, 1¼-in. diameter threadbars provide 225 kip at 60 percent of ultimate load. Therefore, use of two 1¼-in. threadbars with an initial force of 110 kip in each bar is required.

8. *Stress Checks.* Stresses computed for service load conditions, with post-tensioning, for the exterior and interior stringers are given in Figure 83. The stress diagrams indicate that the bridge has been rather finely tuned for conditions with and without live load in both interior and exterior stringers. Note that the allowable compression stress is less than 18 ksi at the lower flange anchorage location in Figure 83(b). The reduction in allowable stress is required because the lower flange, which is ordinarily in tension, is laterally unsupported for the induced compression stress from the post-tensioning.

Tension in the concrete curbs exceeded the allowable 164 psi stress at many locations. With the curbs neglected, however, tension stresses in the deck were within the allowable stress. To date, experience has shown that the tension overstresses computed for the curbs do not cause excessive cracking or damage. If the curb tension were required to remain within allowable numbers, the post-tensioning design would require revision.

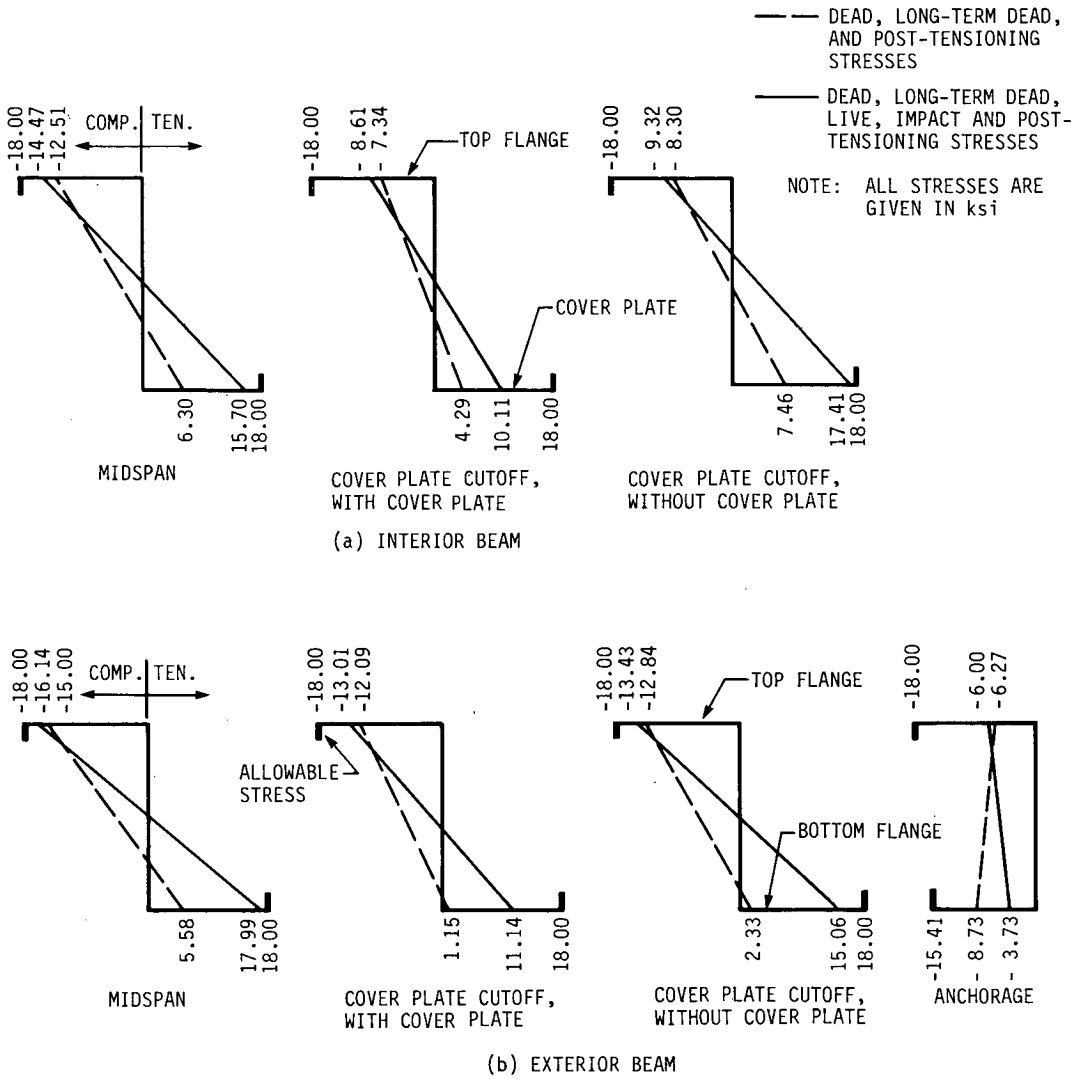

Figure 83. Stress diagrams for steel bridge stringers.

9. *Bracket and Anchorage Design.* Stresses computed near the proposed anchorage locations indicated that holes for 1-in.-diameter bolts may be placed in the bottom flange of the exterior stringer at a maximum of 6 ft from the center of bearing without causing a stress in excess of 18 ksi (*91*). Experience has shown that the brackets need to be about 2 ft long. Anchorages then may be located approximately 4 ft from the supports, as shown in Figure 84.

Brackets are designed to be welded from angles and plates in the configuration shown in Figure 84. Because the brackets are bolted to both flange and web, no field welding is required, and the relatively large post-tensioning forces are spread over a sufficiently large region of the stringer so as to avoid local overstress.

10. *Checks of Other Design Factors.* Only the shear connection between the deck and the steel stringers indicated any problems. The bridge was originally designed with part of the shear connection assumed to be caused by bond between top beam flanges and the concrete deck. Because this assumption is no longer permissible, additional shear connectors were required for exterior stringers. Double-nutted high-strength bolts were added as required (*159*).

The design example demonstrates the applicability of post-tensioning as a strengthening method for a relatively complex, simple span bridge. With proper design, only the overstressed exterior stringers required post-tensioning. The post-tensioning distributed away from the exterior stringers relieved a minor overstress on the interior stringers. The design manual (*91*) from which the example was summarized provides a suitable reference for Scheme A post-tensioning of simple-span steel-stringer bridges. Additional information regarding design methodology, ultimate load, and temperature tests is contained in Ref. *90*.

3.8.5.2 Other Post-Tensioning

As stated earlier, post-tensioning can be designed using conventional structural analysis and design principles. It is often

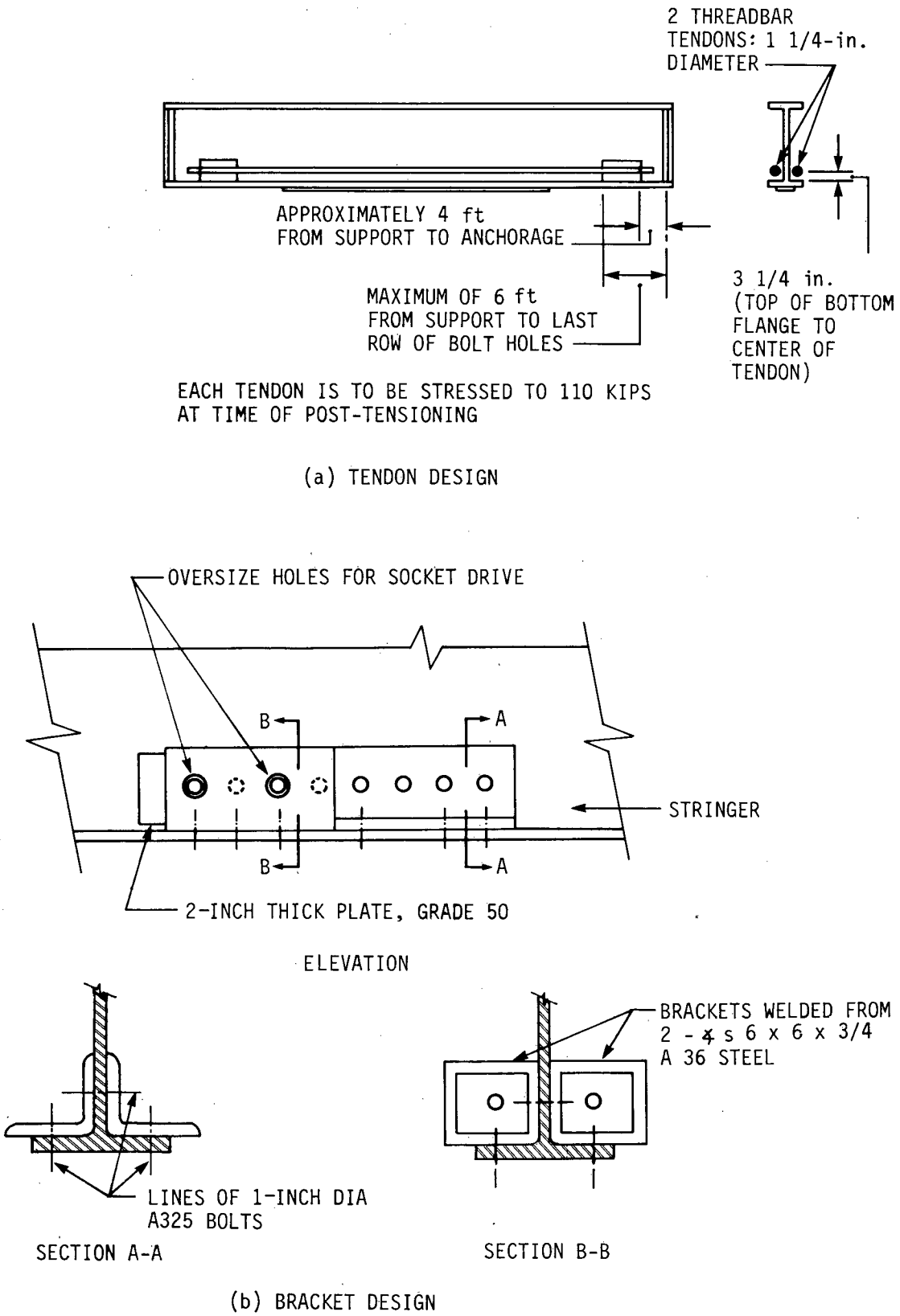

Figure 84. Post-tensioning design.

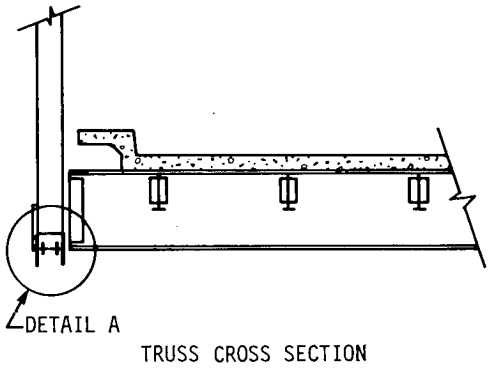

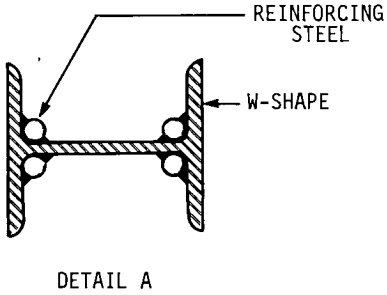

Figure 85. Strengthening of bottom chord joint.

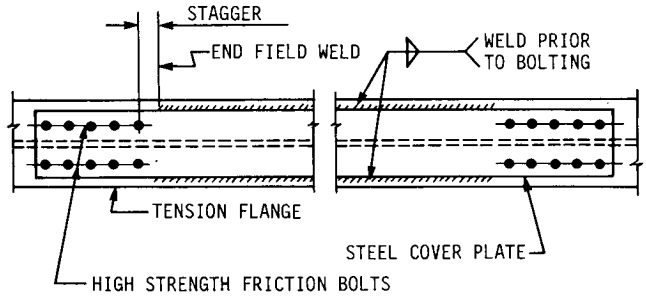

Figure 86. Bolting of cover-plate ends to reduce fatigue cracking.

convenient, however, to have the benefit of research results and information specifically tailored to the design task. The references listed below provide that information for some of the post-tensioning schemes described in Section 3.8.2.

For the Scheme A post-tensioning for repair and strengthening of prestressed-concrete I girders, two NCHRP reports are available (Refs. *291* and *289*). It should be noted, however, that those reports make no reference to the distribution effects when all stringers are not post-tensioned. See Ref. *92* for a distribution example for a prestressed concrete I girder bridge.

Currently, there is a research program at the Bridge Engineering Center at Iowa State University for Scheme AA strengthening of continuous, steel-stringer bridges. The first report on that research will be available by mid-1987.

Scheme D, the king post, is described in Ref. *343*. Considerations for its use, details, and construction procedures are outlined in the reference.

Procedures for Scheme E shear strengthening of timber stringers are given in a NCHRP report (*343*).

A recent FHWA report (*277*) suggests Scheme J, the king post, for strengthening trusses by post-tensioning.

Design information for transverse post-tensioning of laminated timber decks, Scheme K, was developed by the Ontario Ministry of Transportation and Communication (*347, 333*).

The foregoing references are accessible but lack the many variations in practice utilized by Europeans. The following references, in German, by Polish and Czechoslovakian authors, are veritable catalogs of structural configurations, design formulas, anchorage details, and post-tensioning applications (*48, 49, 99*). The references are generally available through interlibrary loan arrangements.

From the questionnaire and personal contacts, the researchers learned that the following states have strengthened bridges with post-tensioning: California, Illinois, Iowa, Minnesota, Pennsylvania, South Dakota, Texas, and Washington. Bridge departments in those states can verify the economics and long-term success of strengthening by post-tensioning.

3.9 STRENGTHENING CRITICAL CONNECTIONS

The types of connections addressed in this manual include cover and splice-plate connections as well as truss connections. Several techniques for improving the strength of connections in bridges exist. The most widespread technique is the replacement of loose or broken rivets with new high-strength bolts. The rivets are removed by knocking off the rivet head with a pneumatic hammer and removing the remaining part of the rivet with a back-out punch. High-strength bolts are then inserted and torqued to specified standards. The high-strength bolts provide increased shear capacity and have been shown to increase the fatigue life of the connected material by reducing fatigue cracking (*258*). It is also recommended that washers be installed with the burr away from the clamped material, because the burr on the washer edge is a potential source of crack initiation in the joint.

A method of strengthening the bottom chord to floorbeam connection of a truss is shown in Figure 85 (*27*). As shown, the wide-flange chord member has four reinforcing bars welded at the flange-web intersection. Additional plate reinforcement was later attached to the joint to reduce the fatigue stress range in the joint vicinity. Plates were bolted across the joint location shown in the figure and were designed to carry 50 percent of the member's live-load stresses. Design of the plate strengthening was based on the bridge being stressed to 90 percent of yield at the bridge's lowest possible load rating.

The addition of high strength bolts to the ends of welded cover plates has also been shown to significantly reduce or eliminate the fatigue cracking often associated with the ends of cover plates (*280*). Figure 86 illustrates techniques for the addition of high-strength bolts to the ends of a welded cover plate. Additional welding to a bolted or riveted connection is a technique that should be carefully approached as a means to strengthening connections. If additional welding is used, it should be designed to carry both dead- and live-load stresses (an exception can be made if the existing connection is capable of carrying dead-load stresses; then the weld should be designed to carry only live-load stresses) (*242*). There are several prob-

lems associated with additional welding of bridge connections. Fatigue cracking at welded connections due to displacement-induced secondary stresses will require strict compliance with AASHTO fatigue strength requirements and careful detailing by the engineer. Lamellar tearing of the connecting plates due to welding must also be considered in the detailing of any welding to be performed. On-site field welding can be expensive and must be carefully monitored to ensure high quality welding is performed. The weldability of existing material must be evaluated. In addition, the use of welding will produce a rigid joint, something to be carefully considered if the joint was originally designed as a pinned connection (as in most trusses).

Pin replacement in older truss bridges may be a difficult repair procedure to accomplish. Corrosion problems will likely have frozen the pin to the connecting eyebars, making the pin's removal extremely difficult. The normal procedure for pin replacement involves erecting falsework under the bridge to carry any loads carried by the connecting members, construction of a frame to restrain the connecting eyebars in place and relieve the pin of any loads, punching out or cutting out the old pin, and installation of new pins (*40*). In addition, it may be desirable to bore out the connecting eyebars if they have been enlarged due to wear and to install larger pins in order to ensure a better fit between eyebars and pin (*247*).

The connecting eyebars in older truss bridges should also be evaluated for fatigue damage at this time. Fatigue failure of the connecting eyebars is most likely to occur at the eye tip or at the side of the eye and not at the forging connecting the eye to the bar (*282*). There are two methods available for the strengthening of eyebars, depending on the degree of fatigue damage and the amount of space available on either side of the eyebar at the connection. If space is sufficient at the pin connection and the existing eye is in good condition, a supplementary eye is fitted around the pin and connected to the existing eyebar, as shown in Figures 87 and 88. As the supplementary eye is being attached, a cable sling is used to relieve the dead load on the existing eyebar, so a tight fit will be present between the new eye and pin as loads are reapplied to the structure. If the existing eyebar has experienced severe fatigue damage or space is not available for a supplementary eye, the old eye should be cut off at the forging and a new eye attached. The eyebar replacement method, however, will require a plan for restraining the joint, such as a frame during the replacement operation. New eyes may be formed for either method by taking cold-rolled bar stock, heating the bar stock cherry red, and then bending the bars into the desired shape.

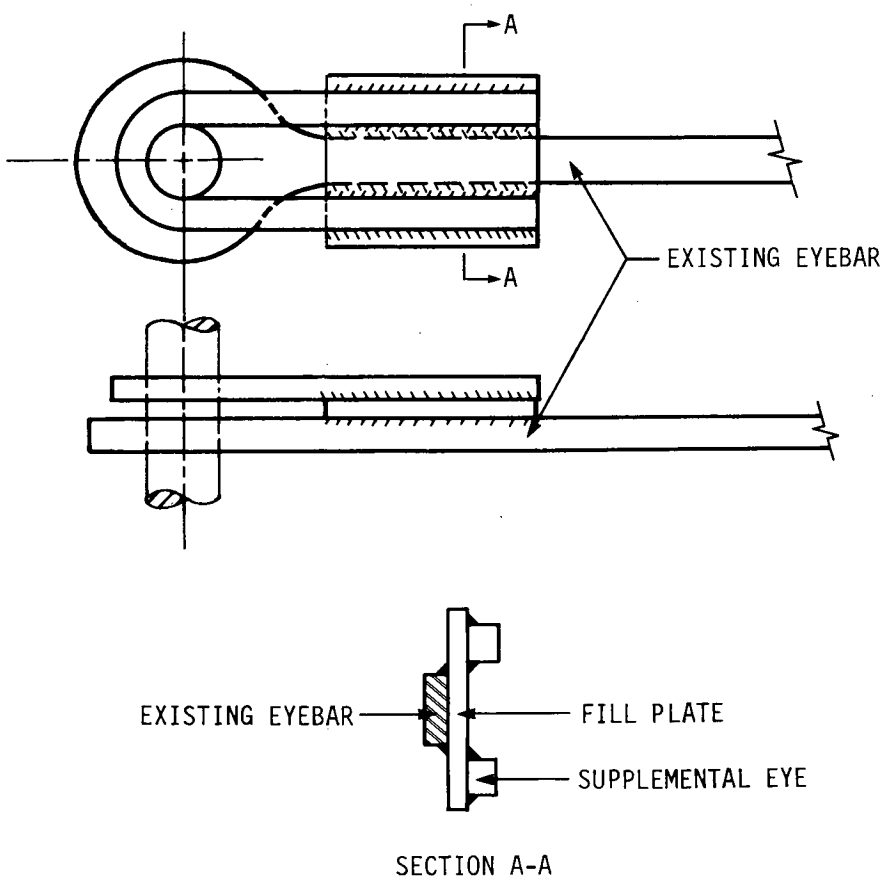

Figure 87. Strengthening a pin connection with a supplementary eye using fill plate.

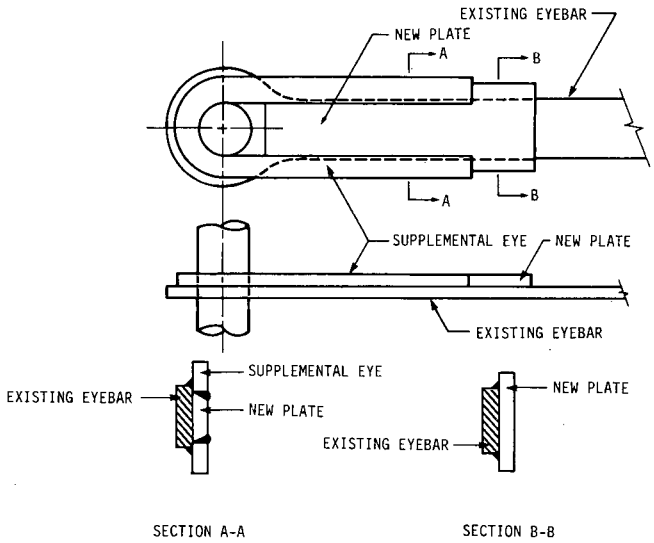

Figure 88. Alternate method of strengthening a pin connection with a supplementary eye.

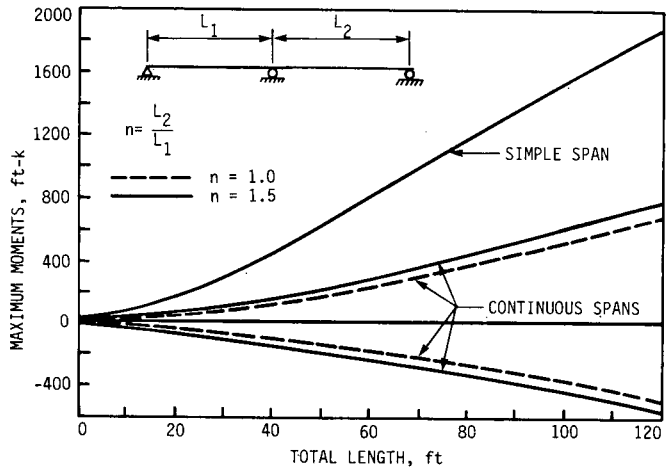

Figure 89. Maximum live-load moments for simple-span vs. continuous two-span bridges.

3.10 DEVELOPING ADDITIONAL BRIDGE CONTINUITY

3.10.1 Addition of Supplemental Supports

3.10.1.1 Description

Supplemental supports can be added to reduce span length and thereby reduce the maximum positive moment in a given bridge. By changing a single-span bridge to a continuous, multiple-span bridge, stresses in the bridge can be altered dramatically, thereby improving the bridge's maximum live-load capacity. Even though this method may be quite expensive because of the cost of adding an additional pier(s), it may still be desirable in certain situations.

3.10.1.2 Applicability and Advantages

This method is applicable to most types of stringer bridges, such as steel, concrete, and timber, and has also been used on truss bridges (*277*). Each of these types of bridges has distinct differences, which will be examined in a later section. The advantage of adding a supplemental center support can be seen in Figure 89, which shows the maximum positive moment for simple supported single-span bridges of various lengths (0 to 120 ft) due to HS20-44 loading (either the standard truck or the standard lane loading, whichever governs). Also shown in this figure for a two-span continuous bridge are the maximum positive and maximum negative moments, which result when an intermediate support is added to the single-span bridge. Two different locations of the added support are given; $n = 1$, $n = 1.5$ where n = ratio of the long span to the short span. To illustrate the effectiveness of adding a midspan support ($n = 1$) consider a simple supported 80-ft single-span bridge. The maximum positive live-load moment can be reduced from 1164.9 ft-kip (in the single-span bridge) to 358.2 ft-kip (in the two-span bridge), which is a reduction of over 69 percent. However, at the same time a negative moment of 266.6 ft-kip has been created that must be taken into account. There are certain situations where the added support cannot be added at the midspan of the original span because of physical constraints existing below the bridge. The changes in maximum live-load moments for one such situation ($n = 1.5$) are also given in Figure 89.

3.10.1.3 Limitations and Disadvantages

Depending on the type of bridge, there are various limitations in this method of strengthening. First, because of conditions directly below the existing bridge there may not be a suitable location for the pier, as, for example, when the bridge requiring strengthening passes over a roadway or railroad tracks. Other constraints, such as soil conditions or stream velocity, could greatly increase the length of the required piles, making the cost prohibitive. The presence of a deep gorge could also make the cost of this procedure prohibitive.

This method is most cost effective with medium- to long-span bridges. This eliminates most timber-stringer bridges because of their short lengths. In truss bridges, the trusses must be analyzed to determine the effect of adding an additional support. All members would have to be examined to determine if they could carry the change in force caused by the new support. Of particular concern would be members originally designed to carry tension, but which because of the added support must now carry compressive stresses. Because of these problems, the emphasis in this section will be on steel and concrete stringer bridges.

3.10.1.4 General Cost Information

General cost information for the addition of a supplemental support (pier system) was obtained from an estimate provided by the Iowa DOT. The assumptions that were used in this estimate are described in Section 3.2.3.8. Other variables used

in obtaining this estimate are: (1) bridge length 80 ft, (2) distance from bridge to the ground 25 ft, and (3) amount of deck removed 30 linear ft.

Because of the large distance between the bridge and the ground, a concrete pier was chosen. The total price for this pier and replaced deck was $27,000, which for this example is close to $13 per sq ft of bridge deck. For bridge heights less than 25 ft, other types of pier systems, such as timber or steel piles, can be used; this will reduce the cost of this method to less than $10 per sq ft of bridge deck. These values can be used in Section 3.2 so that this method of strengthening can be compared to other potential strengthening methods.

3.10.1.5 Design Considerations

Because the design of each intermediate pier system is highly dependent on many variables such as the load on pier, width and height of bridge, and soil conditions, it is not feasible to include a generalized design procedure for piers. The engineer should use standard pier design procedures. A brief discussion of several of the more important considerations (condition of the bridge, location of pier along bridge, soil condition, type of pier, and negative moment reinforcement) is given in the following paragraphs.

Providing supplemental support is quite expensive; therefore, the condition of the bridge is very important. If the bridge is in good to excellent condition and the only major problem is that the bridge lacks sufficient capacity for present day loading, this method of strengthening should be considered. On the other hand, if the bridge has other deficiencies, such as a badly deteriorated deck or insufficient roadway width, a less expensive strengthening method with a shorter life should be considered.

The location of the pier system along the bridge is dependent on the physical constraint that exists below the bridge, the most common of which is a roadway or railroad tracks. For safety purposes it is necessary to place the pier system the required distance away from the roadway or railroad tracks. The amount of reduction in the maximum positive moment varies as the intermediate pier is moved (see Fig. 89).

The type of pier system employed will greatly depend on the loading and also the soil conditions. The most common type of pier system used in this method is either steel H piles or timber piles with a steel or timber beam used as a pier cap. A method employed by the Florida DOT (*266*) can be used to install the piles under the bridge with limited modification to the existing bridge. This method consists of cutting 2 ft x 2 ft square holes through the deck above the point of application of the piles. Piles are then driven into position through the deck. The piles are then cut off so that a pier cap and rollers can be placed under the stringers. Other types of piers, such as concrete pile bents, solid piers, or hammerhead piers can also be used; however, the cost of such piers may restrict their use.

Another major concern with this method is how to provide reinforcement in the deck when the region in the vicinity of the support becomes a negative moment region. With steel stringers the bridge may either be composite or noncomposite. If noncomposite, the concrete deck is not required to carry any of the negative moment and therefore needs no alteration. On the other hand, if composite action exists, the deck in the negative moment region should be removed and replaced with a properly reinforced deck. For concrete stringer bridges the deck in the negative moment region should be removed. Reinforcement to ensure shear connection between the stringers and deck must be installed and the deck replaced with a properly reinforced deck.

This method, although expensive and highly dependent on the surroundings, may be quite effective in the right set of circumstances.

3.10.2 Modification of Simple Spans

3.10.2.1. Description

In this method of strengthening, adjacent spans that are simply supported are connected together with a moment and shear-type connection. Once this connection is in place, the simple spans become one continuous span, which alters the stress distribution. The desired decrease in the maximum positive moment, however, is accompanied by the development of a negative moment over the interior supports.

3.10.2.2 Applicability and Advantages

This method can be used primarily with steel and timber bridges. Although it could also be used on concrete stringer bridges, the difficulties in structural connecting to adjacent reinforced-concrete beams result in the method being too impractical. The stringer material and the type of deck used will obviously dictate construction details. To illustrate the effect of providing continuity, maximum moments in a two-span continuous bridge (as well as in a two-adjacent, simple-span bridge) are shown in Figure 90 for various span lengths. The maximum moments plotted are from HS20-44 loading (either the standard truck or the standard lane loading, whichever governs); no dead load has been included. The span lengths plotted are for the total length of the bridge. Two different span ratios, n = the ratio of the length of span two to the length of span one, have been used ($n = 1$ and $n = 1.5$). Shown in Figure 91 are the

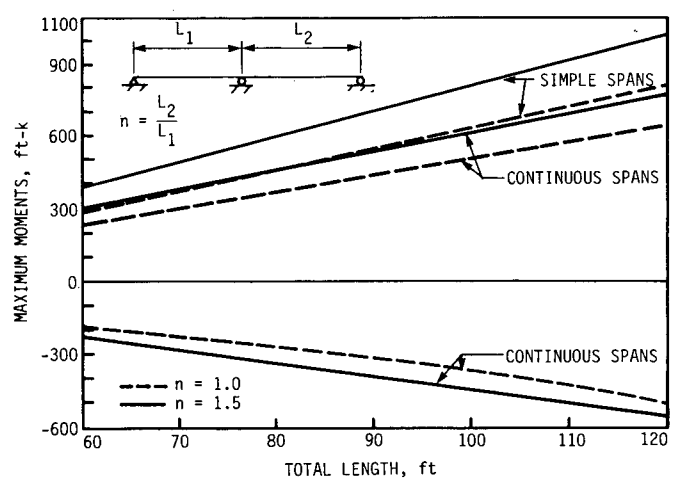

Figure 90. Maximum live-load moments for one continuous two-span bridge vs. two adjacent simple-span bridges.

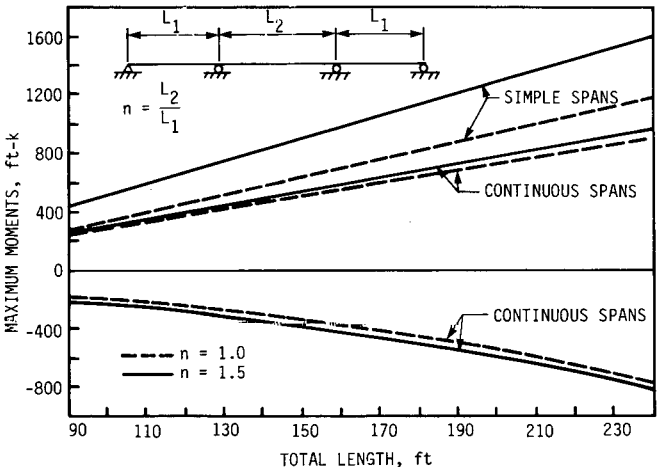

Figure 91. Maximum live-load moments for one continuous three-span bridge vs. three adjacent simple-span bridges.

maximum moments that result when three adjacent simple spans are connected. Again two span ratios, $n = 1$ and $n = 1.5$, have been plotted. As may be determined in Figure 90, if two adjacent 40-ft simple supported spans ($n = 1$) are connected with a moment and shear-type connection, the maximum positive moment is reduced from 449.8 ft-kip to 358.2 ft-kip—a reduction of 20 percent. However, a negative moment over the interior support of 266.6 ft-kip has been created. Thus, the main advantage of this procedure is that it is possible to reduce positive moments (obviously the only moments present in simple spans) by working over the piers and not near the midspan of the stringers. This method also reduces future maintenance requirements because it eliminates a roadway joint and one set of bearings at each pier where continuity is provided (*32*).

3.10.2.3 Limitations and Disadvantages

The main disadvantage of modifying simple spans is the negative moment developed over the piers. To provide continuity, regardless of the type of stringers or deck material, one must design for and provide reinforcement for the new negative moments and shears. Providing continuity also increases the vertical reactions at the interior piers; thus, one must check the piers' adequacy to support the increase in axial load.

3.10.2.4 General Cost Information

General cost information for creating a moment and shear transfer-type connection was obtained from estimates provided by the Iowa DOT. The standard bridge plans and assumptions that were used in this estimate are described in Section 3.2.3.8. Other variables used in obtaining these estimates are: (1) two adjacent 30 ft, simple supported steel-stringer bridges, (2) HS20-44 loading, and (3) estimate obtained for bridge with 4 stringers but presented here as a price per connection.

The following price for a connection can be used in the economics analysis presented in Section 3.2 so that this method of strengthening can be compared to other possible strengthening methods. Included in the cost of this connection is the mobilization, the cost of removing all concrete in what will eventually be the negative moment region, and replacing it with properly reinforced concrete and jacking to reposition the existing rollers. The total cost of a single connection will range from $7,900 to $9,000, depending on the number of connections. More connections will spread the mobilization cost and therefore reduce the cost per connection. The steel splice plates and bolts used in this method will increase with longer spans, but the price of the connection is only slightly sensitive to this variable.

3.10.2.5 Design Considerations

The main design consideration for all three types of stringers (steel and timber) concerns how to ensure full connection (shear and moment) over the piers. The following sections will give some insight into how this may be accomplished.

3.10.2.5.1 Steel stringers. Berger (*32*) has provided information, some of which is summarized here, on how to provide continuity in a steel-stringer concrete-deck system. If the concrete deck is in sound condition, a portion of it must be removed over the piers. Obviously, if the concrete is in poor condition, the entire deck must be removed. A splice, which is capable of resisting moment as well as shear, is then installed between adjacent stringers. Existing bearings are removed and a new bearing assembly is installed. In most instances, it will be necessary to add new stiffener plates and diaphragms at each interior pier. After the splice plates and bearing are in place, the reinforcement required in the deck over the piers is added and a deck replaced. An example (*32*) of such a splice is shown in Figure 92.

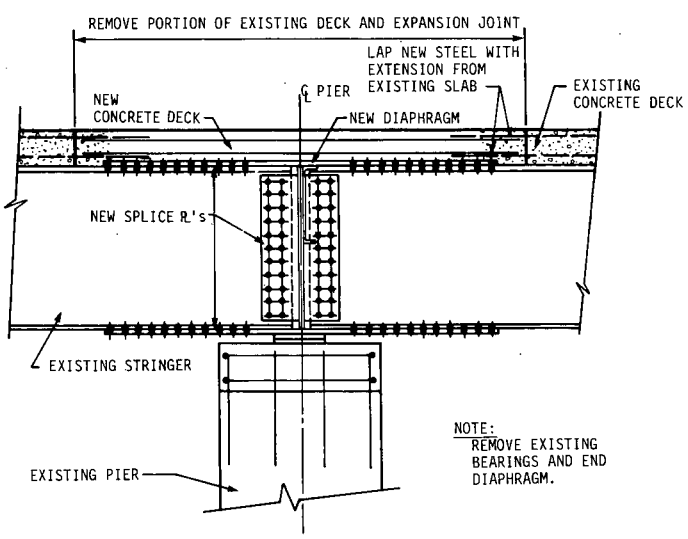

Figure 92. Conceptual details of a moment- and shear-type connection.

3.10.2.5.2 Timber stringers. When providing continuity in timber stringers, steel plates can be placed on both sides and on the top and bottom of the connection and then secured in place with either bolts or lag screws. When adequate plates are used, this provides the necessary moment and shear transfer required. Additional strength can be obtained at the joint by injecting epoxy into the timber cracks as is suggested by Avent et al. (*15*).

Although adding steel plates requires the design and construction of a detailed connection, significant stress reduction can be obtained through its use.

CHAPTER FOUR

SUMMARY AND CONCLUSIONS

4.1 SUMMARY

The purpose of this study was to identify and evaluate the methods of strengthening existing highway bridges. More than 375 publications were reviewed to identify and describe the methods being used. Innovative as well as established techniques were considered. In addition, questionnaires were sent to a number of bridge engineers and consultants to provide additional input.

Methods of increasing the live-load carrying capacity found include (1) reducing dead load, (2) providing composite action, (3) increasing transverse stiffness, (4) increasing cross section, (5) adding or replacing members, (6) applying external post-tensioning, (7) strengthening critical connections, and (8) providing continuity and/or adding supports. Each of these methods is defined and, where applicable, examples of their use are presented.

The types of structures that show the most need of broad, cost-effective application of strengthening were studied. It was found that strengthening is most urgently needed for steel stringer bridges, timber beam bridges, and steel through-truss bridges.

The determination of cost effectiveness of each of the methods of strengthening has been addressed by the presentation of a method of analysis as well as cost data to allow a determination to be made by the manual user. This allows the engineer the ability to select the most appropriate alternative: (1) replacing the existing bridge or (2) strengthening the existing bridge. The model that has been developed allows each alternative to be quantified so that each can be compared in a rational manner. If strengthening is selected, further guidelines are presented to permit the selection of the appropriate strengthening technique.

The major emphasis in this study was the development of a manual (Chapter Three) to assist the engineer in the selection and design of strengthening procedures. The manual compiles, evaluates, and in several instances, suggests improvements to existing strengthening methods, as well as presents new procedures. For each strengthening method listed, a general description of its application, general cost information, design and analysis procedures where appropriate, and related references are provided.

4.2 CONCLUSIONS

1. An extensive source of literature on bridge strengthening is available worldwide, particularly in Europe.
2. Strengthening is a viable alternative for upgrading existing bridges.
3. Replacing deficient members and increasing the cross section of deficient members appear to be the most widely used methods in the United States. These methods are applied routinely and thus there is limited literature available on the techniques.
4. The development of an economic model for evaluating the effectiveness of bridge strengthening as well as the method of strengthening is feasible. This model, which is presented, can be used to determine whether strengthening or replacement is appropriate.
5. Sufficient knowledge exists to develop a manual to assist engineers in applying the principles found in the study, although more research is needed to expand and to improve some of the existing methods.

APPENDIX A

QUESTIONNAIRE DOCUMENTS

EXHIBIT A-1. QUESTIONNAIRE #1

National Cooperative Highway Research Program
NCHRP 12-28(4)

"Methods of Strengthening Existing Highway Bridges" Questionnaire

Please answer all of the questions. If you wish to comment on any questions or qualify your answers, please use the margins or a separate sheet of paper.

QUESTIONNAIRE COMPLETED BY _____

TITLE _____

ADDRESS _____ COUNTY _____

CITY _____ STATE _____ PHONE _____

Return the questionnaire using the enclosed envelope or return to:

Dr. F. Wayne Klaiber, P.E.
Town Engineering Building
Iowa State University
Ames, Iowa 50011

Q-1 Have you used any strengthening techniques

a) to restore a structurally damaged bridge to its original strength?

1 YES
2 NO

b) to increase the load carrying capacity of an undamaged bridge?

1 YES
2 NO

Q-2 At what maximum percentage of replacement cost would you choose strengthening over replacement?

1 UNDER 25%
2 25% - 34%
3 35% - 44%
4 45% - 54%
5 55% - 64%
6 65% - 74%
7 OVER 74%

Q-3 Have you recently developed or implemented any new techniques for strengthening existing bridges?

1 YES
2 NO

If yes, please describe _____

_____

_____

Q-4 For what types of bridges do you see a need for the development of a design procedure for strengthening?

_____

_____

Q-5 In an effort to collect as much information about bridge strengthening as possible, we will be surveying state and county engineers, research institutions, product manufacturers and consulting firms. Do you know of anyone, outside of your organization, who has been involved with bridge strengthening that we should contact?

1 NAME _____ TITLE _____

COMPANY NAME _____

ADDRESS _____ CITY _____

STATE _____ PHONE _____

2 NAME _____ TITLE _____

COMPANY NAME _____

ADDRESS _____ CITY _____

STATE _____ PHONE _____

COMMENTS _____

_____

_____

_____

If you answered yes to either part a or part b of question 1, please complete pages 3 and 4 of this questionnaire. If you answered no to both parts of question 1, you may disregard pages 3 and 4.

Listed below are several methods of strengthening existing bridges. Please refer to this list as you complete the remainder of this questionnaire.

STRENGTHENING METHODS

1 Replace existing deck with a lighter weight deck (steel grid, orthotropic plate, corrugated metal, laminated timber, lightweight concrete, etc.)
2 Provide composite action between deck and supporting members
3 Increase transverse stiffness of bridge deck (diaphragms, cross frames, etc.)
4 Replace deficient members
5 Replace structurally significant portions of deficient members
6 Increase cross-section of deficient members (cover plates, jacketing, etc.)
7 Add supplemental members
8 Post-stress members (post-tensioning, post-compressing, straight tendons, harped tendons, king post, etc.)
9 Add supplemental spanning mechanisms (add arch to truss, etc.)
10 Strengthen critical connections
11 Add supplemental supports to reduce span length
12 Convert a series of simple spans to a continuous span
13 Other

Please indicate if any of the strengthening methods listed above have been implemented in your region. Describe each of the methods used in as much detail as possible, indicating the type of bridge, the year the work was done, the approximate cost and whether or not the bridge had been structurally damaged. Also, rate the structural effectiveness and the cost effectiveness of each method in the following manner:

1 VERY EFFECTIVE
2 MODERATELY EFFECTIVE
3 NOT VERY EFFECTIVE
4 NOT EFFECTIVE AT ALL

Use one space for each bridge you have strengthened. If more spaces are needed, please use a separate sheet of paper or duplicate page 4 of this questionnaire.

BRIDGE #1

STRENGTHENING METHOD _____

_____

_____

TYPE OF BRIDGE _____ YEAR IMPLEMENTED 19 ___

COST $ _____ WAS THE BRIDGE STRUCTURALLY DAMAGED? YES NO

STRUCTURAL EFFECTIVENESS 1 2 3 4 COST EFFECTIVENESS 1 2 3 4

BRIDGE #2

STRENGTHENING METHOD _____

_____

_____

TYPE OF BRIDGE _____ YEAR IMPLEMENTED 19 ___

COST $ _____ WAS THE BRIDGE STRUCTURALLY DAMAGED? YES NO

STRUCTURAL EFFECTIVENESS 1 2 3 4 COST EFFECTIVENESS 1 2 3 4

BRIDGE #3

STRENGTHENING METHOD _____

_____

_____

TYPE OF BRIDGE _____ YEAR IMPLEMENTED 19 ___

COST $ _____ WAS THE BRIDGE STRUCTURALLY DAMAGED? YES NO

STRUCTURAL EFFECTIVENESS 1 2 3 4 COST EFFECTIVENESS 1 2 3 4

BRIDGE #4

STRENGTHENING METHOD _____

_____

_____

TYPE OF BRIDGE _____ YEAR IMPLEMENTED 19 ___

COST $ _____ WAS THE BRIDGE STRUCTURALLY DAMAGED? YES NO

STRUCTURAL EFFECTIVENESS 1 2 3 4 COST EFFECTIVENESS 1 2 3 4

BRIDGE #5

STRENGTHENING METHOD _____

_____

_____

TYPE OF BRIDGE _____ YEAR IMPLEMENTED 19 ___

COST $ _____ WAS THE BRIDGE STRUCTURALLY DAMAGED? YES NO

STRUCTURAL EFFECTIVENESS 1 2 3 4 COST EFFECTIVENESS 1 2 3 4

If plans or in house reports are available for any of the strengthening methods implemented, please indicate who we should contact to obtain a copy.

NAME _____ TITLE _____

ADDRESS _____ CITY _____

STATE _____ PHONE _____

EXHIBIT A-2 QUESTIONNAIRE #2

National Cooperative Highway Research Program
NCHRP 12-28(4)

"Methods of Strengthening Existing Highway Bridges" Questionnaire

Please answer all of the questions. If you wish to comment on any questions or qualify your answers, please use the margins or a separate sheet of paper.

QUESTIONNAIRE COMPLETED BY _____

TITLE _____ COMPANY NAME _____

ADDRESS _____

CITY _____ STATE _____ PHONE _____

Return the questionnaire using the enclosed envelope or return to:

Dr. F. Wayne Klaiber, P.E.
Town Engineering Building
Iowa State University
Ames, Iowa 50011

Q-1 Are you presently marketing any materials or techniques that have been or could be used to strengthen existing bridges?

1 YES
2 NO

If yes, please describe: _____

Q-2 Are you in the process of developing, or have you recently developed any new products or innovative techniques which could be used in bridge strengthening?

1 YES
2 NO

If yes, please describe: _____

Q-3 To what types of bridges can your products or strengthening techniques most effectively by applied?

_____

Q-4 Have any of your products or strengthening techniques been used

a) to restore a structurally damaged bridge to its original strength?

1 YES
2 NO

b) to increase the load carrying capacity of an undamaged bridge?

1 YES
2 NO

If you answered yes to either part a or part b of question 4, please describe the strengthening methods used in as much detail as possible, indicating the type of bridge, the year the work was done, the approximate cost and whether or not the bridge had been previously damaged. Use one space for each bridge you have strengthened. If more spaces are needed, please use a separate sheet of paper or duplicate page 3.

BRIDGE # 1

STRENGTHENING METHOD _____

TYPE OF BRIDGE _____ YEAR IMPLEMENTED 19 ___

COST $ _____ WAS THE BRIDGE STRUCTURALLY DAMAGED? YES NO

BRIDGE #2

STRENGTHENING METHOD _____

TYPE OF BRIDGE _____ YEAR IMPLEMENTED 19 ___

COST $ _____ WAS THE BRIDGE STRUCTURALLY DAMAGED? YES NO

BRIDGE #3

STRENGTHENING METHOD _____

_____

_____

TYPE OF BRIDGE _____ YEAR IMPLEMENTED 19 ___

COST $ _____ WAS THE BRIDGE STRUCTURALLY DAMAGED? YES NO

BRIDGE #4

STRENGTHENING METHOD _____

_____

_____

TYPE OF BRIDGE _____ YEAR IMPLEMENTED 19 ___

COST $ _____ WAS THE BRIDGE STRUCTURALLY DAMAGED? YES NO

BRIDGE # 5

STRENGTHENING METHOD _____

_____

_____

TYPE OF BRIDGE _____ YEAR IMPLEMENTED 19 ___

COST $ _____ WAS THE BRIDGE STRUCTURALLY DAMAGED? YES NO

BRIDGE # 6

STRENGTHENING METHOD _____

_____

_____

TYPE OF BRIDGE _____ YEAR IMPLEMENTED 19 ___

COST $ _____ WAS THE BRIDGE STRUCTURALLY DAMAGED? YES NO

If plans or in house reports are available for any of the strengthening methods implemented, please indicate who we should contact to obtain a copy.

NAME _____ TITLE _____

ADDRESS _____ CITY _____

STATE _____ PHONE _____

In an effort to collect as much information about bridge strengthening as possible, we will be surveying state and county engineers, research institutions, product manufacturers and consulting firms. Do you know of anyone, outside of your organization, who has been involved with bridge strengthening that we should contact?

NAME _____ TITLE _____

COMPANY NAME _____

ADDRESS _____

CITY _____ STATE _____ PHONE _____

NAME _____ TITLE _____

COMPANY NAME _____

ADDRESS _____

CITY _____ STATE _____ PHONE _____

NAME _____ TITLE _____

COMPANY NAME _____

ADDRESS _____

CITY _____ STATE _____ PHONE _____

COMMENTS _____

_____

_____

_____

EXHIBIT A-3 COVER LETTER

IOWA STATE UNIVERSITY

Department of Civil Engineering
Ames, Iowa 50011

Telephone: 515-294-3532

"DATE"

"NAME & ADDRESS"

Dear "FIRST":

Iowa State University, through its Department of Civil Engineering and the Engineering Research Institute, under the AASHTO-sponsored National Cooperative Highway Research Program (NCHRP), is conducting Project HR 12-28(4) entitled "Methods of Strengthening Existing Highway Bridges."

The objective of this research is to review and develop procedures for the strengthening of highway bridges. The initial phase of this project is to determine and evaluate the existing methods of bridge strengthening. The enclosed questionnaire is intended to generate that information on all types of highway bridges including timber, concrete, and steel.

The enclosed questionnaire is primarily intended to gather data that has not been published. It will gather data on innovative strengthening techniques and established strengthening methods, identify which type of bridge shows the need for a cost-effective strengthening techiques, identify new materials, and so forth. The data will then be used for the following purposes: (1) the development of a strengthening manual for use by practicing engineers and (2) the development of a research plan that will evaluate new materials and innovative strengthening techniques identified by the responses to the questionnaire.

We realize that you receive many inquiries to participate in various studies. We do hope, however, that you will find this subject of sufficient need that we can, through the conclusions of this study, provide a more economical method of maintaining our nation's bridges.

Sincerely,

F. Wayne Klaiber, P.E.
Professor, Civil Engineering
Project Director

FWK:dkb

APPENDIX B

EPOXY-BONDED STEEL PLATES

Considerable research has been done on the use of epoxy-bonded steel plates to strengthen existing structures. Researchers have tested both reinforced concrete and steel members that have been strengthened with bonded steel plates. Applications of this strengthening technique, however, have almost exclusively been to reinforced concrete members. The principle of this strengthening technique is fairly simple: an epoxy adhesive is used to bond steel plates to critical areas of reinforced concrete or steel members. This creates a composite section which improves the strength and stiffness of the member (*350*). The steel plates are usually located in the tension zones of a beam; however, compression and shear plates are also possible (*145*). An advantage of this strengthening technique is that almost no loss of overhead clearance results from the addition of the plates (*255*). In addition, most bridges can be strengthened in this manner while remaining open to traffic. The plates are limited, however, to carrying live loads unless jacking is used during erection (*141*).

One of the first documented cases of malleable steel plates adhesively bonded to concrete beams was in 1964 in Durban, South Africa, when the reinforcing steel required in a concrete beam of a new apartment complex was accidentally omitted during construction (*93*). Since this application in South Africa, epoxy-bonded plates have been used to strengthen buildings and bridges in several other countries including: Switzerland, France, USSR, Japan, England, Australia, Belgium, and Poland.

In the early to mid-1970s, several buildings in Switzerland were strengthened by means of epoxy-bonded steel plates (*65, 66*). Reinforced concrete floor slabs and supporting reinforced concrete beams in a building located in Zurich were strengthened to carry additional live load. Plates were bonded to the undersides of the floor slabs and to the soffits of the beams. Shear-reinforcing plates were also bonded to the sides of the beams. Other applications in Switzerland include the use of epoxy-bonded steel plates to strengthen a critical foundation of a building and to strengthen an industrial floor in a factory.

In 1980, a reinforced concrete-through-arch bridge located in Switzerland was rehabilitated and strengthened with epoxy-bonded steel plates (*66*). Steel plates were bonded to the undersides of the floor beams for positive moment strengthening. The bonded reinforcing cost approximately 30 percent of the cost of replacement, and the total rehabilitation cost approximately 60 percent of the cost of replacement.

The strengthening of a reinforced concrete, tee beam bridge in France was reported in 1972 (*42*). The skewed highway bridge, constructed in 1960, had developed a permanent deflection of 8 cm (more than 3 in.) near the midspan of the most heavily loaded beam. The probable cause of the excessive deflection was fatigue. To strengthen the bridge, steel plates were bonded to both the sides and bottoms of the beams. At joints between adjacent plates, lap plates were bonded to provide continuous reinforcing. Up to four layers of flexural coverplates were bonded to the bottom surface of the beams. After strengthening, a fleet of trucks was used to conduct load tests on the bridge.

In 1974, a highway bridge which crosses the Saint-Denis Canal in France was repaired with epoxy-bonded steel plates (*288*). The reinforced concrete, tee beam bridge had reinforcing plates added for both flexure and shear. Traffic was maintained during preparation of the beams; however, the bridge was closed to traffic during bonding to prevent bonding problems caused by vibration.

In the USSR city of Karastan, a continuous span, reinforced concrete bridge, which was constructed in 1912, was repaired with bonded plates (*316*). This work was completed prior to 1974. As a result of poor drainage, up to 25 percent of the reinforcing steel had corroded away. In negative moment regions, steel plates were bonded to a cleaned deck surface. Bolts were welded to exposed reinforcing steel in positive moment regions, and plates were then bolted and bonded to the underside of the beams. The bridge was kept open to traffic, one lane at a time, during strengthening.

By 1975, more than 200 bridges on an elevated motorway in Japan had been strengthened with bonded steel plates (*255*). Thin steel plates were attached to the bottom surface of slabs by using a resin adhesive and anchor bolts (*191*). This strengthening technique was used on cracked slabs, slabs which displayed excessive spalling or scaling, slabs with insufficient thickness, and slabs with insufficient reinforcement. Two erection techniques were used. Either the adhesive was applied to the steel and concrete surfaces prior to setting or the plate was first set in place and then a liquid resin was injected between the concrete and steel surfaces.

In 1975, a group of four reinforced concrete slab bridges near Quinton, England, were strengthened with epoxy-bonded plates after cracks in the soffits were discovered (*93, 301*). Investigations showed that inadequate tension steel had originally been provided in the cracked regions. A total of 1,376 plates, mostly 254-mm (10.0-in.) wide by 6.4-mm (0.26-in.) thick with lengths up to 3.6 m (11.8 ft), were bonded to the underside of the four bridges. In some locations, the effective thickness of the steel was increased by bonding two or three plates together. The bridges were open to normal traffic while the plates were attached and the epoxy was cured (*255*). The total cost for the strengthening of the four bridges was $197,800; this was less than 12 percent of the estimated cost of replacement (*93*). Two additional bridges near Swanley, Kent, were strengthened in a similar manner in 1977. In this application, steel plates were epoxy bonded to the top surface as well as the underside of the continuous voided slab bridges.

Isnard and Thomasson (*142*) reported that in 1975 the frame for an overhead crane in a paper mill in France was cracking severely near the supports and was deflecting on the spans sufficiently to interfere with operation of the crane. The frame was constructed of reinforced concrete tee beams continuous with and over reinforced columns spaced 16- to 20-ft apart. Maximum deflections of the beams were measured as ⅛ in. In order to strengthen and repair the tee beams, steel plates were bonded to various surfaces of the beams. At supports, plates were bonded to the tops of the beams to provide negative moment strengthening. Plates were also bonded to the webs and bottom surface of the tee stem for shear and positive moment strengthening, respectively.

In 1978, steel plates were epoxy bonded to the top of the concrete piers of the Shelley bridge in Perth, Australia (*241*). About the time that the bridge was to be opened to traffic, shear cracks were discovered in the cantilevered portions of the piers. Plates, 200-mm (7.9-in.) wide and 6-mm (0.24-in.) thick were adhesively bonded and bolted in three layers on top of each pier. Work was carried out in the winter months, so it was necessary to heat the area at the top of the piers to maintain a minimum temperature of 15°C (59°F) while the epoxy cured.

Two bridges over the Netekanaal in Belgium were rehabilitated in the late 1970s (*81*). The bridges were two of four nearly identical three span, continuous, prestressed concrete bridges built in 1955. The rehabilitation program for the bridges included external post-tensioning and epoxy-bonded steel plates. The steel plates were bonded to the undersides of the concrete stringers in the positive moment region of the center span. Additional steel plates were bonded around the webs and lower flanges of the stringers near the post-tensioning anchorage beams in the end spans. Prior to implementing these strengthening techniques in the field, the proposed bonded plate reinforcing configuration was tested at the University of Leuven in Belgium.

The application of adhesively bonded plates has been found to be one of the most economical and practical methods of strengthening bridges in Poland (*275*). Adhesively bonded plates have been used to strengthen several reinforced concrete and prestressed concrete bridges. In one example, flat steel strips were bonded to the upper surface of the slab bridge in the negative moment areas. Other repair work included the bonding of flat strips to the lower surface of the concrete bridge deck. In this case the strips were also fastened at the ends with high-strength bolts. In yet another case, steel strips were bonded and anchored with bolts to the side surfaces of the concrete slabs to strengthen old viaducts.

Considerable research has been conducted related to strengthening with epoxy-bonded plates. Table B-1 summarizes some of the research that has been documented. Much of the research in the United States has been related to the bonding of steel to

Table B-1. Summary of research related to epoxy bonding.

Author of Investigation	Year	Country	Reference No.	Pre-cracked Section	Reinforced & Unreinforced Sections	Under & Over Reinforced Sections	Effects of Shear Reinforcement	Dimensions of Concrete Beam	Compressive Strength of Concrete	Surface Preparation of Concrete & Steel	Surface Moisture of Concrete	Type of Adhesive	Glue Thickness	Bond Length	Mechanical Fasteners	Variations in Plate Geometry or Section	Multiple Layers of Plates	Plate Lapping	Cyclic Loading During Glue Hardening	Nature of Loading (Static, Dynamic)	Rate of Loading	Fatigue Tests	Creep	Exposure to Environmental Conditions	Temperature Effects	Humidity & Moisture Effects	Use in Actual Structure	Field Tests	Moment-Curvature Relationships	Steel to Steel	Steel to Concrete
Kajfasz	1967	Poland	150													■															■
L'Hermite, Bresson	1971	France	185													■						■	■					■			■
Bresson	1971	France	43									■					■											■			■
Ladner, Flueler	1974	Switzerland	172		■		■								■	■				■											■
Irwin	1975	United Kingdom	141																										■		■
Calder	1979	United Kingdom	53																					■	■	■					■
Teoh Han	1979	Malaysia	120	■																											■
Cusens, Smith	1980	United Kingdom	75				■					■	■					■		■		■			■	■				■	■
Jones, et al.	1980	United Kingdom	147									■	■				■	■													■
Raithby	1980	United Kingdom	255	■								■				■		■		■							■	■			■
Swamy, Jones	1980	United Kingdom	319																■												■
VanGemert	1980	Belgium	348											■						■							■				■
DeBuck, et al.	1981	Belgium	81						■		■	■		■			■			■					■						■
MacDonald	1981	United Kingdom	187																■											■	
Kostasy, et al.	1981	West Germany	271								■	■	■	■		■		■		■		■									■
Jones, Swamy	1982	United Kingdom	146			■										■															■
MacDonald	1982	United Kingdom	188	■								■	■	■		■	■	■													■
Mays, Tilly	1982	United Kingdom	202									■										■			■					■	
Cardon, Boulpaep	1983	Belgium	55																	■					■	■					■
Albrecht, et al.	1984	United States	2									■									■				■	■				■	
Jones, Swamy, Salman	1985	United Kingdom	145					■				■	■			■															■
Mecklenburg, ET. AL	1985	United States	205									■									■				■	■					■
VanGemert, VandenBosch	1985	Belgium	350																						■						■
Hoigard, Longinow	1986	United States	132																						■	■	■			■	
Wiener, Jirsa	1986	United States	368							■					■	■															■
Swamy, Jones, Bloxham	1987	United Kingdom	320	■									■			■	■														■

steel, while in other countries, research has primarily been related to the bonding of steel to concrete. Some of the research results will be discussed in greater detail below.

Critical to the success of adhesively bonded plates are the selection and application of the adhesive and the preparation of the surfaces to be bonded (*255*). Both the concrete and the steel surfaces must be grit-blasted and cleaned prior to application of the epoxy resin. The mixing of the adhesive must be carefully controlled and a uniform layer, 1- to 1.5-mm thick (*147*), applied to the bonding surfaces. If the plate is properly bonded, the shear strength of the adhesive joint will exceed the shear strength of the adjacent concrete, and the steel can be considered to act compositely with the concrete (*255*).

The bonded steel plates should not mask the warning of impending failure which, in a well-designed reinforced concrete member, is given by the opening of cracks. A study conducted by MacDonald concluded that rapid shear failure of the concrete can be prevented with proper sizing of the plate (*188, 189*). In this study, steel plates of different widths but of constant cross-sectional area were epoxy-bonded to concrete test beams and subjected to 4-point bending tests. The results indicated that narrow plates permitted the development of sufficient stress to result in sudden horizontal shear failures in the concrete. Wide plates, on the other hand, remained bonded to the beams at the maximum sustained load and resulted in ductile failures. MacDonald suggested that there is an optimum width/thickness ratio at which a maximum increase in failure load and a significant increase in stiffness can be obtained while still maintaining a ductile failure.

Ongoing exposure tests are being conducted by Calder (*53*). Concrete beams with epoxy-bonded steel plates have been exposed to various climatic and environmental conditions. After two years, the exposed beams displayed a slight reduction in strength compared to beams stored in a controlled environment. A significant amount of corrosion was noted at the steel/epoxy interface of the exposed beams. The reduction in overall strength of the exposed beams was attributed to the corrosion.

In the United States, the fatigue life of cover plates epoxy-bonded to the tension flange of steel beams has been investigated at Case Western Reserve University (*223*). In a similar application, researchers at the University of Maryland combined end-bolting with adhesive bonding (*2, 3*). Both studies concluded that the use of adhesives improved the fatigue life of cover plates. The adhesive helps to distribute and transfer the load over a larger area, and hence reduces stress concentrations. Findings in the study conducted by Albrecht et al. indicate that adhesive bonding, when used in conjunction with end-bolting, increased the fatigue life of cover plates by a factor of 20 over that of conventionally welded cover plates (*2*). Though Albrecht et al. advised that the method of adhesive bonding needs further research, they concluded that adhesive-bonding combined with end-bolting has the potential of making cover plates attached to steel bridge girders fatigue proof.

The use of a bolted and epoxy-bonded sleeve has been suggested by Shanafelt and Horn in *NCHRP Reports 226 and 280* (*291, 289*) as one method of repairing damaged prestressed concrete members. A welded metal sleeve conforming to the shape of the prestressed beam is bolted to the damaged beam, and epoxy resin is pressure injected.

Hoigard and Longinow (*132*) investigated the durability of steel to steel bonded joints when exposed to a hostile environment. Significant losses in bond strength were noted in the connections that had been subjected to a simulated rain environment.

A notable advantage of strengthening a bridge with epoxy-bonded steel plates is that the work can be completed with minimal disruption to traffic. The effects of cyclic loading during curing of the adhesive was studied by Swamy and Jones (*319*) and MacDonald (*187*). Swamy and Jones found that the cyclic loading had no effect on the ultimate strength of the beams. MacDonald used two different adhesives in his research. Test beams with one adhesive displayed a 7 percent to 31 percent reduction in shear strength due to the cyclical loading. No reduction in strength was recorded for test beams with the other adhesive.

Even though there has been considerable research and many documented applications of epoxy-bonded plates in other countries, this strengthening technique has not been widely accepted in the United States. Further research is needed before this technique can be recommended for general use. A practical design methodology and feasible bonding techniques for field applications need to be developed. In addition, further research is needed related to the long-term durability of the bonded plates.

APPENDIX C

BIBLIOGRAPHY

1. "Acrylic Concrete for Fast Repair." *Concrete Construction,* Vol. 29, No. 10 (Oct. 1984) pp. 881–886.
2. ALBRECHT, P., SAHLI, A., CRUTE, D., ALBRECHT, PH., and EVANS, B.,"Application of Adhesives to Steel Bridges."*FHWA Report No. FHWA-RD-84-037* (Nov. 1984) pp. 1–30, 106–147.
3. ALBRECHT, P., WATTER, F., and SAHLI, A., "Toward Fatigue-Proofing Cover Plate Ends." W. H. Munse Symposium on Behavior of Metal Structures, Research to Practice. ASCE National Convention, Philadelphia, Pa. *Proc.* (May 17, 1983) pp. 24–44.
4. AMERICAN ASSOCIATION OF STATE HIGHWAY AND TRANSPORTATION OFFICIALS, *Standard Specifications for Highway Bridges.* AASHTO (1983) 394 pp.
5. AMERICAN CONCRETE INSTITUTE, "Concrete Repair and Restoration." ACI Compilation No. 5, authorized reprint

from *Concrete International: Design and Construction,* Vol. 2, No. 9 (Sept. 1980) 119 pp.

6. AMERICAN CONCRETE INSTITUTE COMMITTEE 403, "Guide for Use of Epoxy Compounds with Concrete." *J. ACI,* Vol. 59, No. 9 (Sept. 1962) pp. 1121–1142.
7. AMERICAN CONCRETE INSTITUTE COMMITTEE 503, "Use of Epoxy Compounds with Concrete." *J. ACI,* Vol. 70, No. 9 (Sept. 1973) pp. 614–645.
8. AMERICAN INSTITUTE OF STEEL CONSTRUCTION, INC., "Steel Bridges: The Best of Current Practice." Chicago, Ill. (1985) pp. 10–11.
9. ANAND, S. C. and TALESSTCHI, A., "Prestressed Composite Steel Beam Design." *J. Struct. Div., Proc. ASCE,* Vol. 99, No. ST3 (Mar. 1973) pp. 301–319.
10. ANDREY, D. and SUTER, R., "Maintenance and Repair of Construction Works." (Maintenance et reparation des ouvrages d'art.") Ecole Polytechnique Federale de Lausanne, Lausanne, Switzerland (1986). (French)
11. APPLIED TECHNOLOGY COUNCIL (ATC), Seismic Retrofitting Guidelines for Highway Bridges." Federal Highway Administration, Final Report, *Report No. FHWA-RD-83-007* (Dec. 1983) 219 pp.
12. AREA COMMITTEE 15, "Existing Bridges." *Am. Railroad Eng. Assoc. Bull. 660,* Part 7 (Nov. 1976) pp. 3–9.
13. "Assembly Line Deck Speeds Bridge Renovation." *Better Roads,* Vol. 45, No. 11 (Nov. 1975) pp. 8–9.
14. AVENT, R. R., "Decay, Weathering and Epoxy Repair of Timber." ASCE, *J. Struct. Eng.,* Vol. 111, No. 2 (Feb. 1985) pp. 328–342.
15. AVENT, R. R., EMKIN, L. Z., HOWARD, R. H., and CHAPMAN, C. L., "Epoxy-Repaired Bolted Timber Connections." *J. Struct. Div., Proc. ASCE,* Vol. 102, No. ST4 (Apr. 1976) pp. 821–838.
16. AVENT, R. R., EMKIN, L. Z., and SANDERS, P. H., "Behavior of Epoxy Repaired Full-Scale Timber Trusses." *J. Struct. Div., Proc. ASCE,* Vol. 104, No. ST6 (Jun. 1978) pp. 933–951.
17. AVENT, R. R., SANDERS, P. H., and EMKIN, L. Z., "Structural Repair of Heavy Timber with Epoxy." *Forest Products J.,* Vol. 29, No. 3 (Mar. 1979) pp. 15–18.
18. AVRAMIDOU, N., "Redistribution of Action-Effects on Repaired R. C. Frames." *International Association for Bridge and Structural Engineering Symposium: Strengthening of Building Structures—Diagnosis and Therapy,* Venezia, Vol. 46 (1983) pp. 225–232.
19. BACHELART, H., "Strengthening of Metal Structures." ("Renforcement des structures metalliques.") *Annales de l'Institut Technique du Batiment et des Travaux Publics,* France, No. 412 (Feb. 1983) pp. 96–101. (French)
20. BACHMANN, H. and HORISBERGER, W., "The Collapse and Reconstruction of a Prestressed Concrete Box-Section Girder." *International Association for Bridge and Structural Engineering Proc.,* Vol. 10 (Nov. 1977) 19 pp.
21. BAKHT, B. and CSAGOLY, P. F., "Strengthening and Widening of Steel Pony Truss Bridges." *Can. J. Civ. Eng.,* Vol. 4, No. 2 (Jun. 1977) pp. 214–224.
22. BAKHT, B. and JAEGER, L. G., *Bridge Analysis Simplified.* McGraw-Hill Book Company, N. Y. (1985) 294 pp.
23. BAKHT, B. and THARMABALA, T., "Steel-Wood Composite Bridges and Their Static Load Performance." *Can. Soc. Civ. Eng. Annual Conference,* Saskatoon (May 27–31, 1985) pp. 99–118.
24. BARNETT, R. L., "Prestressed Truss-Beams." *J. Struct. Div., Proc. ASCE,* Vol. 83, No. ST2 (Mar. 1957) pp. 1–22.
25. BASTARD, J., Reinforcement by Welding of the Douarnenez Bridge." ("Renforcement par soudre du pont de Douarnenez.") *Annales de l'Institut Technique du Batiment et des Travaux Publics,* France, No. 70 (Oct. 1953) pp. 902–916. (French)
26. BEAL, D. B., Strength of Concrete Bridge Decks." *FHWA Report No. FHWA-NY-RR-81-89* (Jul. 1981) 36 pp.
27. BEAUCHAMP, J. C., CHAN, M. Y. T., and PION, R. H., "Repair and Evaluation of a Damaged Truss Bridge—Lewes, Yukon River." *Can. J. Civ. Eng.,* Vol. 11, No. 3 (Sept. 1984) pp. 494–504.
28. BECK, B. L., KLAIBER, F. W., and SANDERS, W. W., JR., Field Testing of County Road 54 Bridge over Anclote River, Pasco County, Florida." Engineering Research Institute Project 1730, *ISU-ERI-Ames-85417,* Iowa State Univ. (Oct. 1984) 48 pp.
29. BELENYA, E., *Prestressed Load-Bearing Metal Structures.* MIR Publishers, Moscow (1977) 463 pp.
30. BELENYA, E. I. and GOROVSKII, D. M., "The Analysis of Steel Beams Strengthened by a Tie Rod." *International Civ. Eng.,* Vol. 2, No. 9 (1971/72) pp. 412–419.
31. BENTHIN, K., "Strengthening of Bridge No. 3699, Chaska, Minnesota." Minnesota Department of Transportation (1975) 11 pp.
32. BERGER, R. H., "Extending the Service Life of Existing Bridges by Increasing Their Load Carrying Capacity." *FHWA Report No. FHWA-RD-78-133* (Jun. 1978) 75 pp.
33. BERGER, R. H., "Full-Depth Modular Precast, Prestressed Bridge Decks." *TRB Record 903,* Transportation Research Board (1983) pp.52–59.
34. BERGER, R. H. and BEESON, D. H., "New Life for a Condemned Bridge." *Public Works,* Vol. 106, No. 4 (Apr. 1975) pp. 62–65.
35. BERRIDGE, P. S. A., "Prestressing Strengthens a Wrought-Iron Bridge." *Civ. Eng.,* Vol. 27, No. 8 (Aug. 1957) pp. 38–39.
36. BERRIDGE, P. S. A. and DONOVAN, L. H., "Prestressing Restores Weakened Truss Bridge." *Civ. Eng.,* Vol. 26, No. 9 (Sept. 1956) pp. 48–49.
37. BETTIGOLE, N. H., Development and Evaluation of a Lightweight Modular Unfilled Steel Grid Deck with Composite Reinforced Concrete Overlay." 1st International Bridge Conference, Pittsburgh, Pa., *Proc.* (June 4–6, 1984) pp. 141–144.
38. BLAKELEY, R. W. G., DOWSING, R. S., DUNLOP, R. J., PRESTON, R. J., and THOMPSON, K. J., "The Road to Motunui." *The Institution of Professional Engineers New Zealand: Transportation,* Vol. 12, No. 2/CE (Jul. 1985) pp. 104–119.
39. BLODGETT, O. W., "Shear Attachments for Composite Construction—Building." *Design of Welded Structures,* The James F. Lincoln Arc Welding Foundation, Cleveland, Ohio (1966) pp. 4.9.7–4.9.8.
40. BONDI, R. W., "Pin Replacement on a 100-Year Old Whipple Truss Bridge." 2nd Annual International Bridge Conference, Pittsburgh, Pa., *Proc.* (June 17–19, 1985) pp. 218–223.
41. BONDI, R. W. and BAKER, M., JR., "Adding Redundancy to Fracture Critical 2-Eyebar Members in a Cantilever

Truss Bridge." 2nd Annual International Bridge Conference, Pittsburgh, Pa., *Proc.* (June 17–19, 1985) pp. 47–60.

42. BRESSON, J., "Strengthening by Bonded Reinforcing of the Underpass on CD 126 on the Southern Autoroute." (Renforcement par collage d'armatures du passage inferieur du CD 126 sous l'autoroute du sud.") *Annales de l'Institut Technique du Batiment et des Travaux Publics,* France, No. 297 (Sept. 1972) pp. 2–24. (French)
43. BRESSON, J., "New Research and Applications of the Utilization of Bonding in Structures—Concrete Plates." ("Nouvelles recherches et applications concernant l'utilisation des collage dans les structures. Beton plaque.") *Annales de l'Institut Technique du Batiment et des Travaux Publics,* France, No. 278 (Feb. 1971) pp. 22–25. (French)
44. "Bridge Deck Repairs Completed Months Ahead of Schedule." *Concrete Construction,* Vol. 29, No. 2 (Feb. 1984) p. 147.
45. "Bridge Fixed Quickly under Traffic." *Engineering News Record,* Vol. 207, No. 20 (Nov. 19, 1981) p. 28.
46. "Bridge Rebuilt with Composite Design." *Engineering News Record,* Vol. 165, No. 20 (Nov. 17, 1960) p. 91.
47. "Bridge Under Repair—But Open to Traffic." Reprint from *Welding Design and Fabrication* (Nov. 1976) 1 p.
48. BRODKA, J., JERKA-KULAWINSKA, K., and KWASNIEWSKI, M., *Prestressed Steel Members—Static Computations. (Vorgespannte Stahltraeger-Statische Berechnung.)* Verlagsgellschaft Rudolf Mueller, Koeln—Braunsfeld (1968) 89 pp. (German)
49. BRODKA, J. and KLOBUKOWSKI, J., *Prestressed Steel Construction. (Vorgespannte Stahlkonstruktionen.)* Wilhelm Ernst & Sohn, Berlin, West Germany (1969) 179 pp. (German)
50. BRUNGRABER, R. J., KIM, J. B., and YADLOSKY, J. M., "Truss Bridge Rehabilitation by Superposition of an Arch Reinforcing Scheme." International Conference on Short and Medium Span Bridges, Toronto, Can., *Proc.* (Aug. 8–12, 1982) pp. 333–341.
51. BUTLAND, A. N., "Factors Involved in the Renewal of Underline and Overline Bridges and their Influence on Design." *Proc. ICE, Pt. II: Research and Theory,* Vol. 1 (Oct. 1952) pp. 725–759.
52. CADY, P. D., "Inflation and Highway Economic Analysis." *J. Transp. Eng., Proc. ASCE,* Vol. 109, No. 5 (Sept. 1983) pp. 631–639.
53. CALDER, A. J. J., "Exposure Test on Externally Reinforced Concrete Beams—First Two Years." Transport and Road Research Laboratory, Department of the Environment, Crowthorne, New Zealand (1979) pp. 19–27.
54. CAMPISI, V. N., Exodermic Deck Systems: A Recent Development in Replacement Bridge Decks." *Modern Steel Construction,* Vol. 26, No. 3 (Third Quarter 1986) pp. 28–30.
55. CARDON, A. H. and BOULPAEP, F., "Adhesion Between Traditional Materials and Epoxy Resins." ("Adhesion entre les materiaux traditionnels et les resines epoxy.") *International Association for Bridge and Structural Engineering Symposium: Strengthening of Building Structures—Diagnosis and Therapy,* Venezia, Vol. 46 (1983) pp. 211–216. (French)
56. "Careful Planning Speeds Bridge Replacement." Reprint from *Better Roads* (Dec. 1974) 3pp.
57. CARPENTER, J. E. and MAGURA, D. D., "Structural Model Testing—Load Distribution in Concrete I-Beam Bridges." *J. PCA,* Res. and Dev. Lab. Vol. 7, No. 3 (1965) pp. 32–48.
58. CAUVIN, A. and SOTTOTETTI, S., "Prestressed Steel Structure: Example of Application to Reinforce a Bridge." (Strutture in acciaio presollecitate: esempio di applicazione al rinforzo di un ponte.") *Le Strade* (Italy), Vol 86, No. 1212 (Jan.–Feb. 1984) pp. 69–75. (Italian)
59. "CAWV Members Join Forces to Reinforce Bridge." Reprint from *West Virginia Construction News* (1982) 3 pp.
60. CESTILLI-GUIDI, C., "Strengthening of Building Structures—Therapy." *International Association for Bridge and Structural Engineering Symposium: Strengthening of Building Structures-Diagnosis and Therapy,* Venezia, Vol. 46 (1983) pp. 81–114.
61. CHEUNG, M. S., JATEGAONKAR, R., and JAEGER, L. G., "Effects of Intermediate Diaphragms in Distributing Live Loads in Beam-and-Slab Bridges." *Can. J. Civ. Eng.,* Vol. 13, No. 3 (Jun. 1986) pp. 278–292.
62. CHOLOUS, J., Strengthening of Steel Railway Bridges by Prestressing." ("La precontrainte dans le renforcement des ponts metalliques de la S.N.C.F."), France (1964). (French)
63. CHUNG, H. W., "Epoxy-Repaired Reinforced Concrete Beams." *J. ACI,* Vol. 72, No. 5 (May 1975) p. 233.
64. CHUNG, H. W. and LUI, L. M., "Epoxy-Repaired Concrete Joints." *J. ACI,* Vol. 74, No. 6 (Jun. 1977) pp. 264–267.
65. CIBA-GEIGY, "Araldit Epoxy Resin for Exterior Reinforcing." ("Araldit-Epoxidharze fuer Aussenarmierungen.") *Aspekte,* Switzerland, No. 2 (1979) pp. 2–6. (German)
66. CIBA-GEIGY, "Araldit for a Bridge: Bonded Reinforcing Instead of Replacement." ("Araldit fuer eine Bruecke: Klebarmierung statt Neubau.") *Aspekte,* Switzerland, No. 4 (1982) pp. 2–4. (German)
67. COLLABELLA, D., Rehabilitation of the Williamsburg and Queensboro Bridges—New York City." *The Municipal Engineers J.,* Vol. 70 (Summer 1984) 30 pp.
68. "Composite Construction Speeds Bridge Rehabilitation." *Highway and Heavy Construction,* Vol. 123, No. 5 (May 1980) pp. 164–166.
69. "Converting a Bridge Crisis into a Bridge Opportunity." *Concrete Construction,* Vol. 28, No. 8 (Aug. 1983) pp. 598–602.
70. COOK, J. P., "The Shear Connector." *Composite Construction Methods,* John Wiley and Sons, N. Y. (1977) pp. 168–172.
71. CROZIER, A. C., "Strengthening a Fifty-Year-Old Viaduct." *Concrete,* Vol. 8, No. 7 (Jul. 1974) pp. 22–25.
72. CSAGOLY, P. F. and TAYLOR, R. J., "A Structural Wood System for Highway Bridges." *International Association for Bridge and Structural Engineering Proc.,* p-35/80 (1980) pp. 157–183.
73. CSAGOLY, P. F. and TAYLOR, R. J., "A Structural Wood System for Highway Bridges." *International Association for Bridge and Structural Engineering 11th Congress,* Final Report, Italy (Aug. 31–Sept. 5, 1980) pp. 219–225.

74. CULHAM, G. A. and GHALI, A., "Distribution of Wheel Loads on Bridge Girders." *Can. J. Civ. Eng.*, Vol. 4 (1977) pp. 57–65.
75. CUSENS, A. R. and SMITH, D. W., "A Study of Epoxy Resin Adhesive Joints in Shear." *Structural Engineer*, Vol. 58A, No. 1 (Jan. 1980) pp. 13–18.
76. DALLAM, L. N., "Pushout Tests with High-Strength Bolt Shear Connectors." *Missouri Cooperative Highway Research Program Report 68-7*, Engineering Experiment Station, University of Missouri-Columbia (1968) 66 pp.
77. DALLAM, L. N., "Static and Fatigue Properties of High-Strength Bolt Shear Connectors." *Missouri Cooperative Highway Research Program Report 70-2*, Engineering Experiment Station, University of Missouri-Columbia (1970) 49 pp.
78. DAVIES, B. L. and POWELL, J., "Strengthening of Brinsworth Road Bridge, Rotherham." *International Association for Bridge and Structural Engineering 12th Congress*, Final Report, Vancouver, Canada (Sept. 3–7, 1984) pp. 401–407.
79. DAVIS, R. E., RASHEDI, R., and KHOSRAVIFARD, K., "Prescription for Steel Girder Bridge Rehabilitation." Report, Office of Structures Design, Department of Transportation, Caltrans, Cal., 23 pp.
80. DEAN, A., "The Examination, Assessment, Repair, Maintenance and Renewal of Old Railway Bridges." *The Journal of the Institution of Highway Engineers*, Vol. 3, No. 7 (Jul. 1954) pp. 53–71.
81. DEBUCK, J., VAN ESSCHE, T., VAN GEMERT, D., GAMSKI, K., DEGEIMBRE, R., RIGO, J. M., and WIERTZ, J., "Conception, Computation and Test Program for the Repair of Two Prestressed Concrete Bridges." ("Konceptie, Berekening en Proefprogramma voor de Herstelling van Twee Bruggen in Voorgespannen Beton.") *Tijdschrift der Openbare Werken van Belgie*, Belgium, No. 2 (1981) pp. 1–35. (Flemish and French)
82. DEDIC, D. J. and KLAIBER, F. W., "High Strength bolts as Shear Connectors in Rehabilitation Work." *Concrete International: Design and Construction*, Vol. 6, No. 7 (Jul 1984) pp. 41–46.
83. DEINHARD, J. M., KORDINA, K., MOLZAHN, R., and STORKEBAUM, K. H., "The Failure of the Main River Bridge near Hochheim." ("Der Schadensfall an der Mainbruecke bei Hochheim.") *Beton-und Stahlbetonbau*, West Germany, Vol. 72, No. 1 (Jan. 1977) pp. 1–7. (German)
84. DEPARTMENT OF THE ARMY, "Military Fixed Bridges." *Department of the Army Technical Manual TM 5-312*, Washington, D. C. (Dec. 1968) 345 pp.
85. DEPHILLIPS, F. C., "Bridge Deck Installed in Record Time." *Public Works*, Vol. 116, No. 1 (Jan. 1985) pp. 76–77.
86. DILGER, W. H. and GHALI, A., "Remedial Measures for Cracked Webs of Prestressed Concrete Bridges." *J. PCI*, Vol. 19, No. 4 (Jul./Aug. 1984) pp. 76–85.
87. DILLMAN, D. A., *Mail and Telephone Surveys: The Total Design Method.* John Wiley and Sons, N. Y. (1978) 325 pp.
88. DISCHINGER, F., "Steel Bridges Composite with Reinforced Concrete Compression Plates along with Prestressing by Means of High-Strength Cables." ("Stahlbruecken im Verbund mit Stahlbeton Druckplatten bei gleichzeitger Vorspannung durch hochwertiger Seile.") *Bauingenieur*, West Germany, Vol. 24, No. 11 (Nov. 1949) pp. 321–332. (German)
89. DORTON, R. A., HOLOWKA, M., and KING, J. P. C., "The Conestoga River Bridge—Design and Testing." *Can. J. Civ. Eng.*, Vol. 4, No. 1 (Mar. 1977) pp. 18–39.
90. DUNKER, K. F., KLAIBER, F. W., BECK, B. L., and SANDERS, W. W., JR., "Strengthening of Existing Single-Span Steel-Beam and Concrete Deck Bridges." Final Report—Part II, Engineering Research Institute Project 1536, *ISU-ERI-Ames-85231*, Iowa State Univ. (Mar. 1985) 146 pp.
91. DUNKER, K. F., KLAIBER, F. W. and SANDERS, W. W., JR., "Design Manual for Strengthening Single-Span Composite Bridges by Post-Tensioning." Final Report—Part III, Engineering Research Institute Project 1536, *ISU-ERI-Ames-85229*, Iowa State Univ. (Mar. 1985) 102 pp.
92. DUNKER, K. F., KLAIBER, F. W., and SANDERS, W. W., JR., "Post-Tensioning Distribution in Composite Bridges." *J. Struct. Eng., ASCE*, Vol. 112, No. ST11 (Nov. 1986) pp. 2540–2553.
93. DUSSEK, I. J., "Strengthening of Bridge Beams and Similar Structures by Means of Epoxy-Resin-Bonded External Reinforcement." *TRB Record 785*, Transportation Research Board (1980) pp.21–24.
94. EL-MARASY, M. F. A., "Bridge Rehabilitation and Strengthening Road Research Program OECD." Ministry of Transport, Bridge Department, The Netherlands (1983) 80 pp.
95. ENGELBACH, "Report on the Rehabilitation and Strengthening of the Bridge over the Valley at Heckholzhausen on B 49 between Limburg and Wetzlar." ("Erfahrungsbericht ueber die Sanierungs-und Verstaerkungsarbeiten an der Talbruecke Heckholzhausen im Zuge der B 49 zwischen Limberg and Wetzler.") Wiesbaden: Hessisches Landesamt fuer Strassenbau (1984). (German)
96. ENGELBACH, "Report on the Strengthening of the Bridge over the Main River at Hochheim on the Federal Autobahn Wiesbaden-Hochheim." ("Erfahrungsbericht ueber die Verstaerkungsarbeiten an der Mainbruecke Hochheim (Vorlandbruecke) im Zuge der Bundesautobahn Wiesbaden-Hochheim (A 671).") Wiesbaden: Hessisches Landesamt fuer Strassenbau (1984). (German)
97. ERNST, V. F. and RAEDERSCHEIDT, H. J., "Alteration and Maintenance Measures for the Rhine Bridge at Koeln—Mulheim." ("Umbau und Unterhaltungsmassnahmen an der Rheinbruecke Koeln—Mulheim.") *Der Stahlbau*, West Germany, Vol. 45, No. 10 (Oct. 1976) pp. 301–307. (German)
98. FARGEOT, B., "Repair and Strengthening of Two Structures with Bonded Plates." ("Reparation et renforcement des toles collees de deux ouvrages.") *Annales de l'Institut Technique du Batiment et des Travaux Publics*, France, No. 411 (Jan. 1983) pp. 92–96. (French)
99. FERJENCIK, P. and TOCHACEK, M., "Prestressing in Steel Structures." ("Die Vorspannung in Stahlbau.") Wilhelm Ernst & Sohn, West Germany (1975) 406 pp. (German)
100. FHWA DESIGN & INSPECTION BRANCH, BRIDGE DIVISION, "Recording and Coding Guide for the Structure Inventory and Appraisal of the Nation's Bridges." U. S. Department of Transportation/Federal Highway Administration (1979) 38 pp.

101. FHWA OFFICE OF ENGINEERING, BRIDGE DIVISION, "Sixth Annual Report to Congress: Highway Bridge Replacement and Rehabilitation Program." Federal Highway Administration (Apr. 1985) 62 pp.
102. FISHER, T. A., "Bridge Deck Replacement: Change from Cast-in-Place to Precast." 2nd Annual International Bridge Conference, Pittsburgh, Pa., *Proc.* (June 17–19, 1985) pp. 210–217.
103. FISHER, J. W., HAUSAMANN, H., SULLIVAN, M. D., and PENSE, A. W., "Detection and Repair of Fatigue Damage in Welded Highway Bridges." *NCHRP Report 206* (Jun. 1979) 85 pp.
104. FORD, J. H., "Use of Precast, Prestressed Concrete for Bridge Decks." *Progress Report,* Purdue University and Indiana State Highway Commission, Joint Highway Research Project No. C-36-56N, No. 20 (Jul. 1969) 161 pp.
105. FOSTER, G. M., "Strengthening Old Highway Bridges." *Engineering and Contract Record* (Sept. 23 and Oct. 7, 1942) pp. 58–61, 10–13.
106. FOWLER, D. W. and PAUL, D. R., "Status of Concrete-Polymer Materials in the United States." *Polymers in Concrete: 3rd International Congress on Polymers in Concrete,* ACI Committee 548, Koriyama-shi, Fukushima, Japan (May 13–15, 1981) pp.20–34.
107. FRASER, U. D. and HO, W. K., "Repair and Strengthening of Timber Bridges." National Association of Australian State Road Authorities Bridge Maintenance Seminar, Australian Road Research Board, *Proc.* (Sept. 1979) 37 pp.
108. FREEMAN, M. F., "Repair and Rehabilitation of Steel Truss Bridges Built between 1890 and 1930." Thesis, School of Civil Engineering, Georgia Institute of Technology, Atlanta, Ga. (Aug. 1978) 140 pp.
109. FREUDENBERG, G., "Raising the Load Capacity of an Old Bridge." ("Erhoehung der Tragfaehigkeit einer alten Bruecke.") *Der Stahlbau,* West Germany, Vol. 48, No. 3 (Mar. 1979) pp.76–78. (German)
110. GALINAT, M. A., "An Alternative Bridge Deck Renewal System." 1st Annual International Bridge Conference, Pittsburgh, Pa., *Proc.* (Jun. 4–6, 1984) pp. 137–140.
111. GAMBLE, W. L., "Bridge Evaluation Yields Valuable Lessons." *Concrete International: Design and Construction,* Vol. 6, No. 6 (Jun. 1984) pp. 68–74.
112. GARFIELD, H. G., "Epoxy Injections Repair Historic Prestressed Concrete Bridge." *Civ. Eng.,* Vol. 41, No. 3 (Mar. 1971) pp.39–41.
113. "Glulam Helping to Solve America's Bridge Problem." *Better Roads,* Vol. 46, No. 5 (May 1976) pp. 36–37.
114. GREGG, J. T., "Renovation of Sewells Road Suspension Bridge." International Conference on Short and Medium Span Bridges, Toronto, Can., *Proc.* (Aug. 8–12, 1982) pp. 405–422.
115. GREINER ENGINEERING SCIENCES, INC., "Widening and Replacement of Concrete Deck of Woodrow Wilson Memorial Bridge." Session 187 (Modular Bridge Decks), 62nd Annual Transportation Research Board Meeting (Jan. 20, 1983) 16 pp.
116. GREULICH, INC., "Greulich Bridge Flooring Systems." Pittsburgh, Pa. (1985) 19 pp.
117. GREULICH, INC., "Exodermic Bridge Decking." Preprint from Sweets 1986 Catalog, Pittsburgh, Pa. (1986) 2 pp.
118. GUTKOWSKI, R. M., "Modern Developments in Timber Bridges in North America." International Conference on Short and Medium Span Bridges, Toronto, Can., *Proc.* (Aug. 8–12, 1982) pp. 219–231.
119. HADLEY, H. M., "STEEL BRIDGE GIRDERS WITH PRESTRESSED COMPOSITE TENSION FLANGES." *Civ. Eng.,* Vol. 36, No. 5 (May 1966) pp. 70–72.
120. HAN, T., "The Effect of Bonded Mild Steel Plates in the Strengthening and Repairing of Reinforced Concrete Beams." *J. I.E.M.,* Vol. 26 (Jun./Dec. 1979) pp. 31–37.
121. HARMS, S. D., "The Innovative Use of Reactive Resins for Bridge Repair: An International Overview from Formulation through Application." 1st International Bridge Conference, Pittsburgh, Pa., *Proc.* (Jun. 4–6, 1984) pp. 161–178.
122. HARRIS, P. A., "Strengthening Reinforced Concrete Bridges." *Concrete Construction,* Vol. 24, No. 10 (Oct. 1979) pp. 673–676.
123. HASIJA, V. K., "Concrete-Filled Steel Grid Floors for Bridges." Reliance Steel Products Company, Pittsburgh, Pa. (Jul. 1975) 60 pp.
124. HASIJA, V. and ANGELOFF, C., "Concrete-Deck Deterioration: Concrete-Filled Steel-Grid Bridge Decks Have the Answer." *TRB Record 651,* Transportation Research Board (1977) pp. 11–16.
125. HECKEL, R., "The Failure and Repair of the Fourth Bridge over the Danube in Vienna." ("Der Schadensfall und die Wiederinstandsetzung der vierten Donaubruecke in Wien.") *Oesterreichische Ingenieur-Zeitschrift,* Austria, Vol. 14, No. 10 (Oct. 1971) pp. 301–307 (German)
126. HEINS, C. P., FOUT, W. S., and WILKISON, R. Y., "Replacement or Repair of Old Truss Bridges." *TRB Record 607,* Transportation Research Board (1976) pp. 63–65.
127. HEINS, C. P. and FIRMAGE, D. A., *Design of Modern Steel Highway Bridges.* John Wiley and Sons, N. Y. (1979) 463 pp.
128. HILL, J. J. and SHIROLE, A. M., "Economic Performance Considerations for Short Span Bridge Replacement Structures." Minnesota Department of Transportation (1983) 22 pp.
129. HOADLEY, P. G., "Behavior of Prestressed Composite Steel Beams." *J. Struc. Div., Proc. ASCE,* Vol. 89, No. ST3 (Jun. 1963) pp. 21–34.
130. HOADLEY, P. G., "The Nature of Prestressed Steel Structures." *HRB Report 200,* Highway Research Board (1967) pp. 11–26.
131. HOFFMAN, G. L., "Bridge Management: Computer Aided Priorities." *Civ. Eng.,* Vol. 56, No. 5 (May 1986) pp. 62–64.
132. HOIGARD, K. and LONGINOW, A., "The Effects of Hostile Environment on Adhesively Bonded Steel Bridge Connections." 3rd Annual International Bridge Conference, Pittsburgh, Pa., *Proc.* (Jun. 2–4, 1986) pp. 87–92.
133. HOLLOWAY, R., "New Roles for Old Bridges." International Conference on Short and Medium Span Bridges, Toronto, Can., *Proc.* (Aug. 8–12, 1982) pp. 315–325.
134. HOLM, T. A., "Structural Lightweight Concrete for Bridge Redecking," *Concrete Construction,* Vol. 30, No. 8 (Aug. 1985) pp. 667–672.
135. HOLZAPFEL, M., KEIM, W., SATTELE, J., and STROBELE, A., "Origin and Repair of Crack Damage in a Prestressed Concrete Bridge." ('Entstehung und Beseitigung von Rissschaden an einer Spannbetonbruecke.") *Beton- und*

Stahlbetonbau, West Germany, Vol. 78, No. 6 (Jun. 1983) pp. 162–164. (German)

136. HONDA, H. and KOBORI, T., "Vibration Control of Stiffening Arch Bridge." *International Association for Bridge and Structural Engineering 12th Congress,* Final Report, Vancouver, Can. (Sept. 3–7, 1984) p. 1082.
137. HUGENSCHMIDT, F., "Epoxy Adhesives in Precast Prestressed Concrete Construction." *J. PCI,* Vol. 19, No. 2 (Mar./Apr. 1974) pp. 112–124.
138. IINO, T. and OTOKAWA, K., "Application of Epoxy Resins in Strengthening of Concrete Structures." *Polymers in Concrete: 3rd International Congress on Polymers in Concrete,* ACI Committee 548, Koriyama-shi, Fukushima, Japan (May 13–15, 1981) pp. 1262–1276.
139. IOWA STATE HIGHWAY COMMISSION, "Bridge Standards Book 1 & 2" Ames, Iowa (1972) 363 pp.
140. IP, S. F., "Structural Applications of Epoxy Resin Adhesives." *Road Research Unit Bull. No. 29,* National Roads Board of New Zealand, Wellington, New Zealand (1974) 61 pp.
141. IRWIN, C. A. K., "The Strengthening of Concrete Beams by Bonded Steel Plates." *Transport and Road Research Laboratory Supplementary Report No. 160 UC,* Department of the Environment, Crowthorne, Berkshire, England (1975) 21 pp.
142. ISNARD, A. and THOMASSON, C., "Two Examples of Strengthening of Structures by Bonded Steel Laminations." (Deux exemples de renforcement de structure par aciers lamellaires colles.") *Annales de l'Institut du Batiment et des Travaux Publics,* France, No. 349 (Apr. 1977) pp.64–69. (French)
143. JENSEN, J. J. and SKOGLAND, J. O., "Norwegian Concrete Bridges—A Technical Economic Analysis." ("Norske betongbroer—en teknisk-okonomisk analyses.") *Nordisk Betong,* Sweden, No. 1 (1976) pp. 19–27. (Norwegian)
144. JOHNSTON, D. W. and ZIA, P., "Level-of-Service System for Bridge Evaluation." *TRB Record 962,* Transportation Research Board (1984) pp. 1–8.
145. JONES, R., SWAMY, R. N. and SALMAN, F. A. R., "Structural Implications of Repairing by Epoxy Bonded Steel Plates." *Structural Faults 85, Proc. 2nd International Conference on Structural Faults and Repair,* Westminster, London, England (April 30–May 2, 1985) pp.75–80.
146. JONES, R., SWAMY, R. N., and ANG, T. H., "Under- and Over-Reinforced Concrete Beams with Glued Steel Plates." *The International Journal of Cement Composites and Lightweight Concrete,* Vol. 4, No. 1 (Feb. 1982) pp. 19–32.
147. JONES, R., SWAMY, R. N., BLOXHAM, J., and BOUDERBALAH, A., "Composite Behaviour of Concrete Beams with Epoxy Bonded External Reinforcement." *The International Journal of Cement Composites and Lightweight Concrete,* Vol. 2, No. 2 (May 1980) pp. 91–107.
148. JUNGWIRTH, D. and KERN, G., "Long-Term Maintenance of Prestressed Concrete Structures—Prevention, Detection and Elimination of Defects." (Langzeitverhalten von Spannbeton—Konstruktionen Verhueten, Erkennen und Beheben von Schaden.") *Beton- und Stahlbetonbau,* West Germany, Vol. 75, No. 11 (Nov. 1980) pp. 262–269. (German)
149. KAHN, L. F., WILL, K. M., and SANDERS, P. H., "Strengthening Existing Bridges by Means of Epoxy Injection." *TRB Record 711,* Transportation Research Board (1979), pp. 47–48.
150. KAJFASZ, S., "Concrete Beams with External Reinforcement Bonded by Gluing—Preliminary Investigation." Reunion Internationale des Laboratories d'Essais et de Recherches sur les Materiaux et les Constructions (RILEM) Symposium on Synthetic Resins in Building Construction, Paris, France, *Proc.,* Vol. 1 (Sept. 1967) pp. 142–151.
151. KANDALL, C., "Increasing the Load-Carrying Capacity of Existing Steel Structures." *Civ. Eng.,* Vol. 38, No. 10 (Oct. 1968) pp. 48–51.
152. KANNANKUTTY, R. and MORGAN, R. S., "A Policy/Program Approach to Bridge Rehabilitation Versus Replacement." 1st International Bridge Conference, Pittsburgh, Pa., *Proc.* (Jun. 4–6, 1984) pp. 222–227.
153. KARAMCHANDANI, K. C., "Strengthening of Reinforced Concrete Members." International Symposium on 'Rehabilitation of Structures,' Maharastra Chapter of the American Concrete Institute, Bombay, *Proc.* (Dec. 1981) pp. 157–159.
154. KEMPTER-ROSSMAN INTERNATIONAL, "Value Engineering for Highways." Federal Highway Administration, Washington, D. C. (1980) 111 pp.
155. KIM, J. B., BRUNGRABER, R. J., and YADLOSKY, J. M., "Truss Bridge Rehabilitation Using Steel Arches." *ASCE, J. Struct. Eng.* Vol. 110, No. 7 (Jul. 1984) pp.1589–1597.
156. KING, J. D. and POWELL, H. R., "Redesign Modernizes Old Bridge." *Civ. Eng.,* Vol. 40, No. 11 (Nov. 1970) pp.37–39.
157. KINIER, H. L., "Repair and Rehabilitation of Bridges on Secondary Highways and Local Roads." *Highway Construction and Maintenance: Proc.,* Seminar held at the PTRC Summer Annual Meeting, University of Warwick, England, Vol. 185 (Jul. 1979) 11 pp.
158. KITTREDGE, N. E., "Bridge Repair and Strengthening." Master of Science in Civil Engineering Thesis, West Virginia Univ., Morgantown, W. Va. (1982) 112 pp.
159. KLAIBER, F. W., DEDIC, D. J., DUNKER, K. F., and SANDERS, W. W., JR., "Strengthening of Existing Single Span Steel Beam and Concrete Deck Bridges." Final Report—Part I, Engineering Research Institute Project 1536, *ISU-ERI-Ames-83185,* Iowa State Univ. (Feb. 1983) 185 pp.
160. KLAIBER, F. W., DUNKER, K. F., and SANDERS, W. W., JR., "Feasibility Study of Strengthening Existing Single Span Steel Beam Concrete Deck Bridges." Final Report, Engineering Research Institute Project 1460, *ISU-ERI-Ames-81251,* Iowa State Univ. (Jun. 1981) 141 pp.
161. KLAIBER, F. W. and SANDERS, W. W., JR., "Bridge Strengthening by Post-Tensioning." *International Association for Bridge and Structural Engineering 12th Congress,* Final Report, Vancouver, Can. (Sept. 3–7, 1984) pp. 1116–1117.
162. KLEIN, G. J. and GOUWENS, A. J., "Repair of Columns Using Collars with Circular Reinforcement." *Concrete International: Design and Construction,* Vol. 6, No. 7 (Jul. 1984) pp. 23–31.
163. KNEE, D. W., "The Prestressing of Steel Girders." *The Structural Engineer,* Vol. 44, No. 10 (Oct. 1966) pp. 351–353.

164. KONIG, G., WEIGLER, H., QUITMANN, H. D., and STUELB, J., "Supplemental Strengthening of Prestressed Concrete Bridges in Construction Joint Regions by means of Reinforced Concrete Straps." ("Nachtraegliche Verstaerkung von Spannbetonbruecken im Koppelfugen mit bewehrten Betonlaschen.") *Beton- und Stahlbetonbau,* West Germany, Vol. 75, No. 10 (Oct. 1980) pp. 229–235. (German)

165. KORANYI, I., "Strengthening of the Deck Beams of the Railway Bridge over the Danube at Ujpest (Hungary)." ("Verstaerkung der Fahrbahntraeger der Eisenbahnbruecke ueber die Donau bei Ujpest (Ungarn).") *Die Bautechnik,* Germany, Vol. 12, Nos. 18 and 19 (April 27 and May 4, 1934) pp. 235–238, 248–251. (German)

166. KORANYI, I., "Strengthening of Steel Bridges—Mixed Systems." (Verstaerkungen von Stahlbruecken Gemischten Systems.") *Acta Technica Academiae Scientiarum Hungaricae,* Hungary, Vol. 3, Nos. 1 and 2 (1952) pp. 179–221. (German)

167. KOSTEM, C. N. and DECASTRO, E. S., "Effects on Diaphragms on Lateral Load Distribution in Beam Slab Bridges." *TRB Record 645,* Transportation Research Board (1977) pp. 6–9.

168. KROPP, P. K., MILINSKI, E. L., GUTZWILLER, M. J., and LEE, R. H., "Use of Precast-Prestressed Concrete for Bridge Decks." Final Report, Purdue University and Indiana State Highway Commission, Joint Highway Research Project No. C-36-56N (Jul. 1975) 85 pp.

169. KUSHIDA, K., SURUGA, T., and MAEDA, Y., "Application of Composite Girders to Highway Bridge Under Consideration of Maintenance." *International Association for Bridge and Structural Engineering Symposium: Steel and Composite Structures for User Needs,* Dresden, West Germany, Vol. 22 (1975) pp.61–68.

170. LABAUNE, J., "The Widening and Consolidation of the Pont-Neuf across the Vienne at Limoges." ("Elargissement et consolidation du Pont-Neuf sur la Vienne a Limoges.") *Construction,* France, Vol. 24, No. 3 (Mar. 1969) pp. 100–108. (French)

171. LADNER, M., "Reinforced Concrete Members with Subsequently Bonded Steel Sheets." *International Association for Bridge and Structural Engineering Symposium: Strengthening of Building Structures—Diagnosis and Therapy,* Venezia, Vol. 46 (1983) pp. 203–210.

172. LADNER, M. and FLUELER, P., "Tests of Reinforced Concrete Members with Adhesive Bonded Reinforcing." ("Versuche an Stahlbeton Bauteilen mit geklebter Armierung.") *Schweizerische Bauzeitung,* Switzerland, Vol. 92, No. 19 (May 9, 1974) pp. 463–470. (German)

173. LAMBERSON, E. A., "Post-Tensioning Concepts for Strengthening and Rehabilitation of Bridges and Special Structures: Three Case Histories of Contractor Initiated Bridge Redesigns." Dywidag Systems International, Lincoln Park, N. J. (1983) 48 pp.

174. LANE, G. E., "Techniques to Increase the Load Capacity of Truss Bridges." Department of Engineering and Applied Science, University of Wisconsin-Extension, Madison, Wis. (Dec. 9–10, 1982) 7 pp.

175. LATZIN, K., "Strengthening of a Bridge by Welding." ("Verstaerkung einer Bruecke durch Schweissung.") *Der Bauingenieur,* West Germany, Vol. 29, No. 8 (Aug. 1954) pp. 319–320. (German)

176. LAYRANGUES, P., "The Consolidation of Structures by Active Tie-Rods." ("Consolidation des ouvrages d'art par tirants actifs.") *Annales des Pont et Chausses,* France, No. 4 (2nd Trimester 1980) pp. 3, 20–33. (French)

177. L. B. FOSTER COMPANY, "Steel Grid Bridge Flooring Systems." W-2333, Pittsburgh, Pa. (1985) 7 pp.

178. LECROQ, P., "Additional Prestressing." ("Precontrainte additionelle.") *Annales de l'Institut Technique du Batiment et des Travaux Publics,* France, No. 411 (Jan. 1983) pp. 96–103. (French)

179. LEE, D. H., "Prestressed Concrete Bridges and Other Structures." *The Structural Engineer,* Vol. 30, No. 12 (Dec. 1952) pp. 302–313.

180. LEEMING, W. F. and WHITBREAD, J. E., "Stress Investigation and Strengthening of the Royal Albert Bridge, Saltash." *Proc. ICE,* Pt. I: Design and Construction, Vol. 56 (Nov. 1974) pp. 479–495.

181. LELIAVSKY, S., *Arches and Short Span Bridges.* Chapman and Hall, London and New York (1982) pp. 63–225.

182. LERCHETHAL, C. H., "Bonded Sheet Metal Reinforcement for Concrete Slabs." Reunion Internationale des Laboratories d'Essais et de Recherches sur les Materiaux et les Constructions (RILEM) Symposium on Synthetic Resins in Building Construction, Paris, France, *Proc.* (Sept. 4–6, 1967) pp. 165–174.

183. L'HERMITE, R., "Strengthening of Structures in Concrete and in Masonry by Bonding." ("Renforcement des ouvrages en beton et en maconnerie par collage.") *Annales de L'Institut Technique du Batiment et des Travaux Publics,* France, No. 349 (Apr. 1977) pp. 19–23. (French)

184. L'HERMITE, R., "Use of Bonding Techniques for Reinforcing Concrete and Masonry Structures." Reunion Internationale des Laboratories d'Essais et de Recherches sur les Materiaux et les Constructions (RILEM), *Materials and Structures,* Vol. 10, No. 56 (Mar.–Apr. 1977) pp. 85–89. (French)

185. L'HERMITE, R. and BRESSON, J., "Concrete Reinforced with Bonded Reinforcing." ("Beton arme d'armatures collees.") Reunion Internationale des Laboratories d'Essais et de Recherches sur les Materiaux et les Constructions (RILEM) Symposium on Synthetic Resins in Building Construction, Paris, *Proc.* (Sept. 4–6, 1967) pp. 175–203. (French)

186. "Lightweight Decking Rehabs Downrated Ohio River Span." *Rural and Urban Roads,* Vol. 20, No. 4 (Jul./Aug. 1982) pp. 25–26.

187. MACDONALD, M. D., "Strength of Bonded Shear Joints Subjected to Movement During Cure." *International Journal of Cement Composites and Lightweight Concrete,* Vol. 3, No. 4 (Nov. 1981) pp. 267–272.

188. MACDONALD, M. D., "The Flexural Performance of 3.5m Concrete Beams with Various Bonded External Reinforcements." *Transport and Road Research Laboratory Supplementary Report No. 728,* Department of the Environment, Crowthorne, Berkshire, England (1982) 41 pp.

189. MACDONALD, M. D. and CALDER, A. J. J., "Bonded Steel Plating for Strengthening Concrete Structures." *International Journal of Adhesion and Adhesives,* Vol. 2, No. 2 (Apr. 1982) pp. 119–127.

190. MACKIE, G. K., "Recent Uses of Structural Lightweight

Concrete." *Concrete Construction,* Vol. 30, No. 6 (Jun. 1985) pp. 497–502.

191. MAEDA, Y., MATSUI, S., SHIMADA, I., and KATO, H., "Deterioration and Repairing of Reinforced Concrete Slabs of Highway Bridges in Japan. III-Inspection and Repairing of Cracked Slabs." Technology Reports of the Osaka Univ., Vol. 31, No. 1599 (1981) pp. 135–144.
192. MAGNEL, G. P., "Prestressed Steel Structures." *Structural Engineer,* Vol. 28, No. 11 (Nov. 1950) pp. 285–295.
193. MAGNEL, G. P., "Long Prestressed Steel Truss Erected for Belgian Hangar." *Civ. Eng.,* Vol. 24, No. 10 (Oct. 1954) pp. 38–39.
194. MALHOTRA, S. K.; "Structural Design Considerations in Strengthening of Timber Buildings." *International Association for Bridge and Structural Engineering Symposium: Strengthening of Building Structures—Diagnosis and Therapy,* Venezia, Vol. 46 (1983) pp. 251–257.
195. MANCARTI, G. D., "Resurfacing, Restoring and Rehabilitating Bridges in California." International Conference on Short and Medium Span Bridges, Toronto, *Proc.* (Aug. 8–12, 1982) pp. 344–355.
196. MANCARTI, G. D., "Strengthening California's Steel Bridges by Prestressing." *TRB Record 950,* Transportation Research Board (1984) pp. 183–187.
197. MANDER, R. F., "Use of Resins in Road and Bridge Construction and Repair." *The International Journal of Cement Composites and Lightweight Concrete,* Vol. 3, No. 1 (Feb. 1981) pp. 27–39.
198. MANDER, R. S. and NANDA, V. K., "Ingenious Use of Bailey Bridge for Haulage of Fill Materials for Pandoh Dam." *Irrigation and Power,* Vol. 34 No. 3 (Jul. 1977) pp. 289–296.
199. MANSUR, M. A. and ONG, K. C. G., "Epoxy-Repaired Beams." *Concrete International: Design and Construction,* Vol. 7, No. 10 (Oct. 1985) pp. 46–50.
200. MARTIN, R. A. and IFFLAND, J. S. B., "Marine Parkway Bridge Truss Member Replacement." *ASCE, J. Struct. Eng.,* Vol. 109, No. 7 (Jul. 1983) pp. 1602–1616.
201. MARTIN, L. D. and SCOTT, N. L., "Use of Precast Concrete Components for Replacement and Rehabilitation of Bridges." International Symposium on 'Rehabilitation of Structures,' Maharastra Chapter of the American Concrete Institute, Bombay, *Proc.* (Dec. 1981) pp. 29–38.
202. MAYS, G. C. and TILLY, G. P., "Long Endurance Fatigue Performance of Bonded Structural Joints." *International Journal of Adhesion and Adhesives,* Vol. 2, No. 2 (Apr. 1982) pp. 109–114.
203. MCCAFFERTY, O. W., JR., "Criteria for Determination of Bridge Needs." 1st Annual International Bridge Conference, Pittsburgh, Pa., *Proc.* (Jun. 4–6, 1984) pp. 215–221.
204. MCFARLAND, W. F., GRIFFIN, L. I., ROLLINS, J. B., STOCKTON, W. R., PHILLIPS, D. T., and DUDEK, C. L., "Assessment of Techniques for Cost-Effectiveness of Highway Accident Countermeasures." *FHWA Report No. FHWA-RD-79-53* (Jan. 1979) 337 pp.
205. MECKLENBURG, M. F., ALBRECHT, P., and EVANS, B. M., "Screening of Structural Adhesives for Application to Steel Bridges." University of Maryland Department of Engineering, FHWA Interim Report, Contract No. DTFH-61-84-R-0027 (Feb. 1985) 102 pp.
206. MEMMOTT, J. L. and DUDEK, C. L., "Queue and User Cost Evaluation of Work Zones (QUEWZ)." *TRB Record 979,* Transportation Research Board (1984) pp. 12–19.
207. MIGLIACCI, A., ANTONUCCI, R., AVRAMIDOU MAIO, N., NAPOLI, P., SAMUELLI FERRETTI, A., and VIA, G., "Repair Techniques of Reinforced Concrete Beam-Column Joints." *International Association for Bridge and Structural Engineering Symposium: Strengthening of Building Structures—Diagnosis and Therapy,* Venezia, Vol. 46 (1983) pp. 355–362.
208. MINISTRY OF TRANSPORTATION AND COMMUNICATIONS, "Design of Prestressed Wood Bridges Using the Ontario Highway Bridge Design Code." Ontario, Can. (1983) 30 pp.
209. MINISTRY OF TRANSPORTATION AND COMMUNICATIONS, "Design of Wood Bridge Using the Ontario Highway Bridge Design Code." Ontario, Can. (1983) 72 pp.
210. MISCH, T., "Repair of an Arch Bridge with Expanding Cement." ("Ausbesserung einer Bogenbruecke mit Quellzement.") *Beton- und Stahlbetonbau,* West Germany, Vol. 48, No. 1 (Jan. 1953) pp. 19–20. (German)
211. MISHLER, H. W. and LEIS, B. N., "Evaluation of Repair Techniques for Damaged Steel Bridge Members: Phase I." Final Report, NCHRP Project 12-17 (May 1981) 131 pp.
212. "Modern Post-Tensioning Methods Rehabilitate Famous Old Crossing." *Engineering News Record,* Vol. 171, No. 6 (Aug. 8, 1963) pp. 52–56.
213. MOHR, C., "Bridge Repairs on the Chur-Arosa Railway Line." ("Brueckenreparaturen auf der Strecke Chur-arosa der Rhaetischen Bahn.") *Schweizerische Bauzeitung,* Switzerland, Vol. 69, No. 39 (Sept. 29, 1951) pp. 540–545. (German)
214. MOHR, C., HAEFELI, R., MEISSER, L., WALZ, F., and SCHAAD, W., "Alteration of the Lanquart Bridge on the Rhaetisch Railway near Klosters." ("Umbau der Landquartbruecke der Rhaetischen Bahn in Klosters.") *Schweizerische Bauzeitung,* Switzerland, Vol. 65, Nos. 1,2, and 3 (Jan. 4,11, and 18, 1947) pp. 5–8, 20–24, and 32–37. (German)
215. MOLL, E. L. and DRYSDALE, R. G., "Investigation of Transverse Stressing of Concrete Bridge Decks." 1st International Bridge Conference, Pittsburgh, Pa. *Proc.* (Jun. 4–6, 1984) pp. 208–214.
216. MONCK, W., "Strengthening Timber Beam Decks through Attachment of Additional Plates (Composite T-Beams)." ("Verstaerkung von Holzbalkendecken durch nachtraegliche Scheibenausbildung (T-formiger Verbundkoerper.")) *Bauzeitung,* East Berlin, Germany No. 3 (1982) pp. 152–157. (German)
217. MOREAU, P. and MULLER, J., "Strengthening by Means of Additional Prestressing of the Pont de Givors." ("Renforcement par precontrainte additionelle du pont de Givors.") *Annales de l'Institut Technique du Batiment et des Travaux Publics,* France, No. 411 (Jan. 1983) pp. 105–109. (French)
218. MOSS, P. J., "Structural Uses of Epoxy Resin Adhesives." *Road Research Unit Bull. No. 68,* National Roads Board of New Zealand, Wellington, New Zealand (1984) 159 pp.
219. MUCHMORE, F. W., "Techniques to Bring New Life to Timber Bridges." ASCE, *J. Struct. Eng.,* Vol. 110, No. 8 (Aug. 1984) pp. 1832–1846.
220. MUELLER, T., "Alteration of the Highway Bridge over the Aare River in Aarwangen." ("Umbau der Strassenbruecke ueber die Aare in Aarwangen.") *Schweizerische Bauzeitung,* Switzerland, Vol. 87, No. 11 (March 13, 1969) pp. 199–203. (German)

221. NACHTERGAELE, R. ET AL., "International Colloquium: Maintenance of Structure." ("Colloque International: Gestion des ouvrages d'art.") *Annales des Travaux Publics de Belgique,* Belgium, No. 4 (1981) 18 pp. (French)
222. NAGARAJ, T. S. and SUNDARA RAJA IYENGAR, K. T., "Strengthening of Damaged Concrete by In Situ Polymerization." *Polymers in Concrete: 3rd International Congress on Polymers in Concrete,* ACI Committee 548, Koriyama-shi, Fukushima, Japan (May 13–15, 1981) pp. 1108–1119.
223. NARA, H. and GASPARINI, D., "Fatigue Resistance of Adhesively Bonded Connections." *FHWA Report No. FHWA-OH-81-001* (Nov. 1981) 130 pp.
224. NATIONAL COOPERATIVE HIGHWAY RESEARCH PROGRAM, "Summary of Progress through 1986." Washington, D. C. (1986) 220 pp.
225. NATIONAL HIGHWAY TRAFFIC SAFETY ADMINISTRATION, "The Economic Cost to Society of Motor Vehicle Accidents." Washington, D. C. (1983) 92 pp.
226. NAWY, E. G. and NEUWERTH, G. E., "Fiberglass Reinforced Concrete Slabs and Beams." *J. Struct. Div., Proc. ASCE,* Vol. 103, No. ST2 (Feb. 1977) pp. 421–440.
227. NAWY, E. G., NEUWERTH, G. E., and PHILLIPS, A. M., "Behavior of Fiber Glass Reinforced Concrete Beams." *J. Struct. Div., Proc. ASCE,* Vol. 97, No. ST9 (Sept. 1971) pp. 2203–2215.
228. NENE, R. L., "Repairs and Restoration of Reinforced Concrete Columns." International Symposium on 'Rehabilitation of Structure,' Maharastra Chapter of the American Concrete Institute, Bombay, *Proc.* (Dec 1981) pp. 63–65.
229. "A New Era in Bridge-Rebuilding." *Engineering News Record,* Vol. 212, No. 1 (Jan. 5, 1984) pp. 36–39.
230. "New Eyebar Members Strengthen Truss Bridge." *Engineering News Record,* Vol. 196, No. 9 (Feb. 26, 1976) p. 14.
231. "New York Cuts Bridge Costs with Lightweight Concrete." *Better Roads,* Vol. 54, No. 11 (Nov. 1984) p. 17.
232. NICKERSON, R. L. "Bridge Rehabilitation—Construction View Expediting Bridge Redecking." 2nd Annual International Bridge Conference, Pittsburgh, Pa., *Proc.* (Jun. 17–19, 1985) pp. 5–9.
233. OBERNDORFER, K., "Replacement of the Web Members in Steel Truss Bridges Without Scaffolding." ("Geruestlose Auswechslung der Fullstaebe Staehlerner Fachwerkbruecken.") *Der Stahlbau,* West Germany, Vol. 29, No. 2 (Feb. 2, 1980) pp. 59–60. (German)
234. OFFICE OF TRANSPORTATION INVENTORY, Division of Planning and Research, Iowa Department of Transportation, *Manual of Instruction for Completing the Structure Inventory and Appraisal Form—State-County-Municipal.* Iowa Department of Transportation, Ames, Iowa (1978).
235. OHLEMUTZ, A., "Strengthening of a Highway Bridge by Prestressing." ("Verstaerkung einer Strassenbruecke durch Vorspannung.") *Der Stahlbau,* West Germany, Vol. 25, No. 11 (Nov. 1956) pp. 283–284. (German)
236. OIKNINE, J., "Bridge Rehabilitation and Repair with Post-Tensioning." *ASCE Structural Engineering Congress,* Post-Tensioning Institute (Sept. 16–18, 1985) 13 pp.
237. OKINO, M., "Deterioration and Rehabilitation of Bridge Structures of Osaka Expressway System." Hanshin Expressway Public Corporation, Osaka, Japan (1985) pp. 1–7.
238. "Open-Grid Decking Material Recycles Old Bridges." *Rural and Urban Roads,* Vol. 14, No. 3 (Mar. 1976) pp. 54–55.
239. ORGANIZATION FOR ECONOMIC CO-OPERATION AND DEVELOPMENT SCIENTIFIC EXPERT GROUP, "Bridge Rehabilitation and Strengthening." Paris, France (1983) 103 pp.
240. ORGANIZATION FOR ECONOMIC CO-OPERATION AND DEVELOPMENT ROAD RESEARCH GROUP, "Bridge Maintenance." Paris, France (Sept. 1981) 70 pp.
241. PALMER, P. M., "Repair and Maintenance of Concrete Bridges with Particular Reference to the Use of Epoxies." National Association of Australian State Road Authorities Bridge Maintenance Seminar, Australian Road Research Board, *Proc.* (Sept. 1979) 21 pp.
242. PARK, S. H., *Bridge Rehabilitation and Replacement (Bridge Repair Practice).* S. H. Park, Trenton, New Jersey (1984) 818 pp.
243. PERSY, J. P., "Repair and Strengthening by Welding of Puddle Iron Bridges." ("Reparation et renforcement par soudre d'ouvrages d'art en fer puddle.") *Bulletin de Liaisson des Laboratoires des Ponts et Chaussees,* France (Mar.-Apr. 1984) pp. 37–50. (French)
244. PFITZER, O., "Restoration, Strengthening and Widening of a Bridge by Utilization of Composite Construction." ("Instandsetzung, Verstaerkung und Erbreiterung einer Bruecke durch Anwendung einer Verbundkonstruktion.") *Der Bauingenieur,* West Germany, Vol. 27, No. 6 (Jun. 1952) pp. 216–217. (German)
245. "Pile Jackets Restore Boston Pier." *Civ. Eng.,* Vol. 56, No. 10 (Oct. 1986) p. 12.
246. "Pile Restoration." *Concrete International: Design and Construction,* Vol. 2, No. 9 (Sept. 1980) pp. 116–117.
247. PLUMB, M. J., "Sixty-Year-Old Bridge Gets a New Set of Pins." *Engineering News Record,* Vol. 162, No. 9 (Mar. 5, 1959) pp. 38–39.
248. "Polymers Strengthen Concrete." *Civ. Eng.,* Vol. 54, No. 8 (Aug. 1984) pp. 45–47.
249. PORTEOUS, P., "New Technology Means a New Day for American Public Works." *Professional Engineer,* Vol. 52, No. 4 (Winter 1982) pp. 12–17.
250. "Post-Tensioning Systems." *Concrete Construction,* Vol. 28, No. 4 (Apr. 1983) pp. 323–328.
251. PRESTON, R. L., "Strengthening Methods for Bridge Superstructures." National Roads Board, New Zealand (1985) pp. 99–114, 217–222.
252. "Prestressing Steel Stringers Reduces Bridge Weight by 25%" *Engineering News Record,* Vol. 167, No. 16 (Oct. 19, 1961) pp.32–33.
253. PROFANTER, H., "The Restoration Project for the Muhlauer Bridge over the Inn River in Innsbruck." ("Das Sanierungsprojekt fuer die Muhlauer Innbruecke in Innsbruck.") *Der Stahlbau,* West Germany, Vol. 49, No. 2 (Feb. 1980) pp. 46–50. (German)
254. "Properties and Specifications for Epoxies Used in Concrete Repair." *Concrete Construction,* Vol. 29, No. 10 (Oct. 1984) pp. 873–878.
255. RAITHBY, K. D., "External Strengthening of Concrete Bridges with Bonded Steel Plates." *Transport and Road*

Research Laboratory Supplementary Report 612, Department of the Environment, Crowthorne, England (1980) 17 pp.

256. RAITHBY, K. D. and LYNDON, F. D., "Lightweight Concrete in Highway Bridges." *International Journal of Cement Composites and Lightweight Concrete,* Vol. 2, No. 3 (May 1981) pp. 133–146.
257. REAGAN, R. S. and KRAHL, N. W., "Behavior of Prestressed Composite Beams." *J. Struct. Div., Proc. ASCE,* Vol. 93, No. ST6 (Dec. 1967) pp. 87–107.
258. REEMSNYDER, H. S., "Fatigue Life Extension of Riveted Connections." *J. Struct. Div., Proc. ASCE,* Vol. 101, No. ST12 (Dec. 1975) pp. 2591–2608.
259. "The Rehabilitation of the Old York Road Bridge." *Rural and Urban Roads,* Vol. 21, No. 4 (Apr. 1983) pp. 22–23.
260. REIFFENSTUHL, H., "A Bridge with Compression-Stressed Reinforcing—System, Computation, Construction, Field Measurements." ("Eine Bruecke mit Druckspannbewehrung—Konstruktion, Berechnung, Baudurchfuehrung, Messungen.") *Beton- und Stahlbetonbau,* West Germany, Vol. 77, No. 11 (Nov. 1982) pp. 273–278. (German)
261. REIFFENSTUHL, H., "Prestressing of Reinforcing in Compression: Fundamentals and Application Possibilities." ("Das Vorspannen von Bewehrung auf Druck: Grundsaetzliches und Anwendungs-moeglichkeiten.") *Beton- und Stahlbetonbau,* West Germany, Vol. 77, No. 3 (Mar. 1982) pp. 69–73. (German)
262. REIFFENSTUHL, H., "Strengthening of an Athletic Building Roof with Compression Stressed Reinforcement." ("Verstaerkung eines Sporthallendaches mit Druckspannbewehrung.") *Beton- und Stahlbetonbau,* West Germany, Vol. 78, No. 6 (Jun. 1983) pp. 149–154. (German)
263. RELIANCE STEEL PRODUCTS COMPANY, "Reliance Bridge Floor Systems." RSL-20B, McKeesport, Pa. (1985) 15 pp.
264. RHEINISCHES STRASSENBAUAMT MOENCHENGLADBACH, "Rehabilitation of Structure 41 in Autobahnkreuz Holz." ("Erfahrungsbericht—Sanierung des Bauwerks Nr. 41 in Autobahnkreuz Holz.") Rheinisches Strassenbauamt Moenchengladbach, Germany (1983) 11 pp.
265. RIMMEY, K. H. and BETH, R., "Putting Life into 42-Year-Old Arches." *Navy Civil Engineer* (Spring 1985) pp. 22–25.
266. ROBERTS, J. "Manual for Bridge Maintenance Planning and Repair Methods." Florida Department of Transportation (1978) 282 pp.
267. ROBERTS, J. W., "Florida's Approach to Bridge Management." 3rd Annual International Bridge Conference, Pittsburgh, Pa., *Proc.* (Jun. 2–4, 1986) pp. 16–23.
268. RODRIGUEZ, M. GIRON H., and ZUNDELEVICH, S., "Inspection and Design for the Rehabilitation of Bridges for Mexican Railroads." 2nd Annual International Bridge Conference, Pittsburgh, Pa., *Proc.* (Jun. 17–19, 1985) 12 pp.
269. ROGERSON, W. M., SHARP, M. L., STEMLER, J. R., and SOMMER, R. J., "Aluminum Orthotropic Bridge Deck." Reprint from *Civil Engineering,* ASCE (Nov. 1967) pp. 65–70.
270. ROSENKVIST, I., VIGERUST, G., and WABAKKEN, A., "Repair of Grouted Prestressing Cables by Means of Epoxy Injection—Grieg Hall, Bergen." ("Reparasion av Spennkabler med etterinjisert epoxy-plast—Grieghallen, Bergen.") *Nordisk Betong,* Sweden, No. 4 (1974) pp. 22–26. (Norwegian)
271. ROSTASY, F. S., RANISCH, E. H., and ALDA, W., "Subsequent Strengthening of Prestressed Concrete Bridges in Construction Joint Regions by Means of Bonded Steel Plates." ("Nachtraegliche Verstaerkung von Spannbetonbruecken im Koppelfugenbereich durch geklebte Stahllaschen.") *Forschung Strassenbau und Strassenverkehrstechnik,* West Germany, No. 326 (1981) pp. 95–142. (German)
272. ROSTASY, F. S., RANISCH, H., and ALDA, W., "Strengthening of Prestressed Concrete Bridges in the Region of Construction Joints by Means of Bonded Steel Straps." ('Verstaerkung von Stahlbetonbruecken in Koppelfugenbereich durch angeklebte Stahllaschen.") *Bauingenieur,* West Germany, Vol. 56 (1981) pp. 139–145. (German)
273. ROSTASY, F. S. and RANISCH, E. H., "Strengthening of Bridges with Epoxy Bonded Steel Plate." *International Association for Bridge and Structural Engineering Symposium: Maintenance, Repair and Rehabilitation of Bridges,* Washington, D. C., Vol. 39 (1982) pp. 117–122.
274. ROY JORGENSEN ASSOCIATES, INC. and WESTAT RESEARCH INC., "Evaluation of Criteria for Safety Improvements on the Highways." *Report to Bureau of Public Roads (1966) 227 pp.*
275. RYBAK, M., "Reinforcement of Bridges by Bonded Reinforcing." ("Renforcement des ponts par collage de l'armature.") *Materiaux et Constructions,* Vol. 16, No. 91 (Jan./Feb. 1983) pp. 13–17. (French)
276. SAADATMANESH, H., ALBRECHT, P., and AYYUB, B., "Static Strength of Prestressed Composite Steel Girders." *Interim Report,* Department of Civil Engineering, University of Maryland, College Park, Md. (1986) 147 pp.
277. SABNIS, G. M., "Innovative Methods of Upgrading Structurally and Geometrically Deficient Through Truss Bridges." FHWA, *Report No. FHWA-RD-82-041* (Apr. 1983) 130 pp.
278. SABNIS, G. M., CAYES, L., and MODI, H., "Innovative Methods of Upgrading Structurally and Geometrically Deficient Through Truss Bridges." *International Conference on Rehabilitation of Building and Bridges Including Investigations,* Bombay, India (Dec. 21–23, 1981) pp. 221–227.
279. "SAGGING ERKSINE TO GET A RISE." *New Civil Engineer,* No. 182 (Feb. 26, 1976) p. 9.
280. SAHLI, A. H., ALBRECHT, P., and VANNOY, D. W., "Fatigue Strength of Retrofitted Cover Plates." ASCE, J. Struct. Eng., Vol. 110, No. 6 (Jun. 1984) pp. 1374–1388.
281. SALLSTROM, S. and ZSAMBOKY, J., "Reinforcing of a Bridge Deck with Epoxy Bonded Gunite." ("Forstarkning av brobaneplatta med Plastimmad Sprutbetong.") *Nordisk Betong, Sweden, No. 3 (1974) pp. 3–5. (Norwegian)*
282. SANDERS, W. W., JR., ELLEBY, H. A., KLAIBER, F. W., and REEVES, M. D., "Ultimate Load Behavior of Full-Scale Highway Truss Bridges: Phase II—Service Load and Supplementary Tests." Interim Report, Engineering Research Institute Project 1118S, *ISU-ERI-AMES-76036,* Iowa State Univ. (Aug. 1975) 96 pp.

283. SCHAEFER, G., "Alteration of the Gablenz Bridge in Kiel." ("Umbau der Gablenzbruecke in Kiel.") *Der Stahlbau,* West Germany, Vol. 26, No. 10 (Oct. 1957) pp. 289–293. (German)

284. SCHLEGEL, H. W., "Partial Repair of a Steel Plate Girder Bridge without Interruption of Traffic." ("Teilerneuerung einer Staehlernen Vollwandbruecke obne Verkehrsunterbrechung.") *Der Stahlbau,* West Germany, Vol. 32, No. 3 (Mar. 1963) pp. 86–88. (German)

285. SCHMITZ, H. and MILLER, B., "Rehabilitation of the Prinzenallee Elevated Roadway—Execution of the Rehabilitation." ("Sanierung der Hochstrasse Prinzenallee—bauliche Durchfuehrung der Sanierung.") *Konstruktiver Ingenieurbau—Berichte,* West Germany, Vol. 41, pp. 37–42. (German)

286. SCHUEBIGER, E. and WACHTER, H. R., "Utilization of Prestressing for the Restoration of the Swiss Railway Overpass near Lachen." ("Anwendung der Vorspanntecknik auf die Sanierung der SBB-Unterfuehrung bei Lachen.") *Schweizersche Bauzeitung,* Switzerland, Vol. 73, No. 31 (Jul. 30, 1955) pp. 475–478. (German)

287. SCHUETT, H. and RITZKA, G., "Strengthening and Alteration of a Reinforced Concrete Bridge by Utilization of Prestressed Concrete." ("Verstaerkung und Umbau einer Stahlbetonbruecke durch Verwendung von Spannbeton.") *Benton- und Stahlbetonbau,* West Germany, Vol. 58, No. 7 (Jul. 1963) pp. 172–173. (German)

288. SEVENE, J.P., "Three Examples of Repair and Strengthening Work for Structures." ("Trois exemples de travaux de reparation et de renforcements d'ouvrages.") *Annales de l'Institut Technique du Batiment et des Travaux Publics,* France, No. 349 (Apr. 1983) pp. 69–76. (French)

289. SHANAFELT, G. O. and HORN, W.B., "Guidelines for Evaluation and Repair of Prestressed Concrete Bridge Members." *NCHRP Report 280* (Dec. 1985) 84 pp.

290. SHANAFELT, G. O. and HORN, W. B., "Guidelines for Evaluation and Repair of Damaged Steel Bridge Members." *NCHRP Report 271* (Jun. 1984) 64 pp.

291. SHANAFELT, G. O. and HORN, W. B., "Damage Evaluation and Repair Methods for Prestressed Concrete Bridge Members." *NCHRP Report 226* (Nov. 1980) 66 pp.

292. SHIROLE, A. M., "Management of Bridge Maintenance, Repair and Rehabilitation—A City Perspective." *TRB Record 962,* Transportation Research Board (1984) pp. 9–13.

293. SHIROLE, A. M. and HILL, J. J., "Systems Approach to Bridge Structure Rehabilitation or Replacement Decision-Making." *TRB Record 664,* Transportation Research Board (1978) pp. 22–31.

294. SIESS, C. P., NEWMARK, N. M., and VIEST, I. M., "Small Scale Tests on Shear Connectors and Composite T-Beams." *Studies of Slab and Beam Highway Bridges: Part III,* University of Illinois Bull. 49, No. 45, Bull. Series No. 396 (Feb. 1952) pp. 13–115

295. SIVASWAMY, S. R., "Repair and Rehabilitation of the Old Borim Bridge in Goa." International Symposium on Rehabilitation of Structure, Maharastra Chapter of the American Concrete Institute, Bombay, *Proc.* (Dec. 1981) pp. 105–113.

296. SLAVIS, C., "Precast Concrete Deck Modules for Bridge Deck Reconstruction." *Symposium on Systems Construction of Bridge Structures,* Transporation Research Board Annual Meeting, Washington, D.C. (Jan. 1982) 14 pp.

297. SLUTTER, R. G. and DRISCOLL, G. C., JR., "Flexural Strength of Steel-Concrete Composite Beams." *J. Struct. Div., Proc. ASCE,* Vol. 91, No. ST2 (Apr. 1965) pp. 71–99

298. SMITH, G. W., *Engineering Economy: Analysis of Capital Expenditures.* Iowa State University Press, Ames, Iowa (1979) 579 pp.

299. SOLIMAN, M. I., "Repair of Distressed Reinforced Concrete Columns." Canadian Society for Civil Engineering Annual Conference, Saskatoon, Can. (May 27–31, 1985) pp. 59–78.

300. SOLOMON, S. K., SMITH, D. W., and CUSENS, A. R., "Flexural Tests of Steel-Concrete-Steel Sandwiches." *Magazine of Concrete Research,* Vol. 28, No. 94 (Mar. 1976) pp. 13–20.

301. SOMMERARD, T., "Swanley's Steel-Plate Patch-Up." *New Civil Engineer* (Jun. 16, 1977) pp. 18–19.

302. SPRINKLE, M. M., "Prefabricated Bridge Elements and Systems." *NCHRP Synthesis of Highway Practice 119* (Aug. 1985) 75 pp.

303. "Steel Grids Rejuvenate Old Bridges." *The Construction Advisor,* Associated General Contractors of Missouri, Jefferson City, Mo. (May 1974) pp. 18–19.

304. "Steeling the Tension Arch." *Engineering News Record,* Vol. 213, No. 15 (Oct. 11, 1984) pp. 18–20.

305. "Steel Plates Strengthen Bridge Deck." *Concrete Construction,* Vol. 29, No. 11 (Nov. 1984) p. 999.

306. STEMLER, J. R., "Aluminum Orthotropic Bridge Deck System." 3rd Annual International Bridge Conference, Pittsburgh, Pa., *Proc.* (Jun. 2–4, 1986) pp. 62–65.

307. STERIAN, D. "Introducing Artificial Initial Forces into Steel Bridge Decks." *Acier-Stahl-Steel,* Vol. 34, No. 1 (Jan. 1969) pp. 31–37.

308. STEVENS, D. E., "A New Steel Backbone for an Old Concrete Bridge." *Civ. Eng.,* Vol. 29, No. 7 (Jul. 1959) pp. 54–56.

309. STEVENS, L. K. and GOSBELL, K. B., "Model Analysis of a Composite Beam-and-Slab Bridge." *Proc.,* Australian Road Research Board, Vol. 2, Part 2 (1964) pp. 1326–1343.

310. STRAS, J. C., III, "An Experimental and Analytical Study of Prestressed Composite Beams." Master of Science Thesis, Rice University, Houston, Texas (1964).

311. STRASSENBAUAMT ITZEHOE, "Documentation for Rehabilitation, Stoerbruecke Itzehoe." ("Dokumentation von Instandsetzungsmassnahmen, Stoerbruecke Itzehoe.") Itzehoe, West Germany (1985) 4 pp. (German)

312. STRATTON, F. W., "Custom Concrete Drill Helps Repair Shear Cracks in Bridge Girders." *Concrete International: Design and Construction,* Vol. 2, No. 9 (Sept. 1980) pp. 118–119.

313. STRATTON, F. W., ALEXANDER, R. B., and NOLTING, W. J., "Repair of Cracked Structural Concrete by Epoxy Injection and Rebar Insertion." *TRB Record 676,* Transportation Research Board (1978) pp. 34–36.

314. STRATTON, F. W., ALEXANDER, R., and NOLTING, W., "Development and Implementation of Concrete Girder Repair by Post-Reinforcement." Kansas Department of Transportation (May 1982) 31 pp.

315. STRATTON, F. W. and CRUMPTON, C. F., "Kansas Bridges Renovated by Post Reinforcement and Thin Bonded Concrete Overlay." *Concrete Construction,* Vol. 29, No. 8 (Aug. 1984) pp. 706–709.
316. "Strengthening of a Reinforced Concrete Highway Bridge in the USSR."("Verstaerkung einer Stahlbeton-Strassenbruecke in den UdSSR.") *Schweizerische Bauzeitung,* Switzerland, Vol. 92, No. 16 (Apr. 1974) pp. 390–391. (German)
317. STRUCTURAL PRESERVATION SYSTEMS, INC., "The Guidebook to Concrete Repair." Baltimore, Md. (1974) 48 pp.
318. SUTER, R. and ANDREY, D., "Rehabilitation of Bridges." ("Assainissement de ponts.") *Institut de Statique et Structures Beton Arme et Precontraint,* Switzerland, No. 106 (Mar. 1985) pp. 105–115. (French)
319. SWAMY, R. N. and JONES, R., "Technical Notes—Behaviour of Plated Reinforced-Concrete Beams Subjected to Cyclic Loading During Glue Hardening." *The International Journal of Cement Composites,* Vol. 2, No. 4 (Nov. 1980) p. 233.
320. SWAMY, R. N., JONES, R., and BLOXHAM, J. W., "Structural Behaviour of Reinforced Concrete Beams Strengthened by Epoxy-Bonded Steel Plates." *The Structural Engineer,* Vol. 65A, No. 2 (Feb. 1987) pp. 59–68.
321. SYRAMAKEZIS, C. and VOYATZIS, E., "Calculation of Damaged and Repaired or Strengthened Concrete Structures." *International Association for Bridge and Structural Engineering Symposium: Strengthening of Building Structures—Diagnosis and Therapy,* Venezia, Vol. 46 (1983) pp. 195–202.
322. SZILARD, R., "Design of Prestressed Composite Steel Structures." *J. Struct. Div., Proc. ASCE,* Vol. 85, No. ST9 (Nov. 1959) pp. 97–123.
323. SZILARD, R., JR., "Strengthening Steel Structures by Means of Prestressing." *The Engineering Journal,* Vol. 38, No. 10 (Oct. 1955) pp. 1379–1381.
324. TABOR, L. J., "Concrete Repairs." *Precast Concrete,* Vol. 10, No. 2 (Feb. 1979) pp. 65–68.
325. TACHIBANA, Y., KONDO, K., and ITO, K., "Experimental Study on Composite Beams Prestressed with Wire Cables." Final Report, International Association for Bridge and Structural Engineering 7th Congress, Rio de Janeiro (Aug. 10–16, 1964) pp. 677–683.
326. "A Tale of Two Bridges." *Modern Steel Construction,* Vol. 24, No. 1 (1984) pp. 10–12.
327. TAMHANKAR, M. G., "Techniques of Rehabilitation of R.C.C. Pre-Stressed Concrete and Steel Structures." International Symposium on 'Rehabilitation of Structures,' Maharastra Chapter of the American Concrete Institute, Bombay, *Proc.* (Dec. 1981) pp. 23–24.
328. Task Committee on Strength of Old Truss Bridges of the Working Committee on Safety of Bridges under the Technical Committee on Structural Safety and Reliability, *Repair of Old Steel Truss Bridges.* American Society of Civil Engineers, N.Y. (1979) 137 pp.
329. TAYLOR, R., "Strengthening of Reinforced and Prestressed Beams." *Concrete,* Vol. 10, No. 12 (Dec. 1976) pp. 28–29.
330. TAYLOR, R. J., BATCHELOR, B. D., and VANDALEN, K., "Prestressed Wood Bridges." International Conference on Short and Medium Span Bridges, Toronto, *Proc.* (Aug. 8–12, 1982) pp. 203–218.
331. TAYLOR, R. J. and CSAGOLY, P. F., "Rehabilitation of Wood Highway Bridges." Ontario Ministry of Transportation and Communications (1980) 43 pp.
332. TAYLOR, R. J. and CSAGOLY, P. F., "Rehabilitation of Wood Highway Bridges in Ontario." Bridge Maintenance and Rehabilitation Conference, Morgantown, W. Va. (Aug. 13–16, 1980) pp. 357–401.
333. TAYLOR, R. J. and WALSH, H., "Prototype Prestressed Wood Bridge." *TRB Report 950,* Transportation Research Board (1984) pp. 110–122.
334. THEILLOUT, I. N., GODART, B., DEBERNARDI, P., and MIOLANE, M., "Testing of a Numerical Model for Strengthening of Vaults by Means of Countervaults in Reinforced Concrete." ("Verification par un modele numerique du renforcement d'une voute par une contrevoute en beton arme.") *Bulletin de Liaisson des Laboratoires des Ponts et Chaussees,* France (Sept.-Oct. 1983) pp. 5–13. (French)
335. THOS. STOREY ENGINEERS LIMITED, *The Bailey Bridge and Uniflote Handbook.* Acrow Press, London, England (1962) 228 pp.
336. TIMMER, D. H., "A Study of the Concrete Filled Steel Grid Bridge Decks in Ohio." Bridge Maintenance and Rehabilitation Conference, Morgantown, W. Va. (Aug. 13–16, 1980) pp. 422–475.
337. TOKERUD, K., "Economical Structures for Low-Volume Roads." *TRB Record 665,* Transportation Research Board (1978) p. 214.
338. TREMPER, B., "Repair of Damaged Concrete with Epoxy Resins." *J. ACI,* Vol. 32, No. 2 (Aug. 1960) pp. 173–181.
339. TROITSKY, M. S., ZIELINSKI, Z. A., and PIMPRIKAR, M. S., "Experimental Evaluation of Prestressed Steel Plate Girder Bridges." *Experimental Assessment of Performance of Bridges.* American Society of Civil Engineers, N.Y. (1986) pp. 1–16.
340. TROITSKY, M. S., ZIELINSKI, Z. A., and PIMPRIKAR, M. S., "Rehabilitation of Steel Bridges by Prestressing Technique." Canadian Society for Civil Engineering Annual Conference, Saskatoon, Can., *Proc.* (May 27–31, 1985) pp. 23–43.
341. UNITED STATES STEEL CORPORATION, *Highway Structures Design Handbook,* Vol. 1. Pittsburgh, Pa. (1965) 437 pp.
342. UNIVERSITY OF VIRGINIA CIVIL ENGINEERING DEPARTMENT, VIRGINIA HIGHWAY AND TRANSPORTATION RESEARCH COUNCIL, and VIRGINIA DEPARTMENT OF HIGHWAYS AND TRANSPORTATION, "Rehabilitation and Replacement of Bridges on Secondary Highways and Local Roads." *NCHRP Report 243* (Dec. 1981) 46 pp.
343. UNIVERSITY OF VIRGINIA CIVIL ENGINEERING DEPARTMENT, VIRGINIA HIGHWAY AND TRANSPORTATION RESEARCH COUNCIL, and VIRGINIA DEPARTMENT OF HIGHWAYS AND TRANSPORTATION, "Bridges on Secondary Highways and Local Roads—Rehabilitation and Replacement." *NCHRP Report 222* (May 1980) 73 pp.
344. U.S. DEPARTMENT OF TRANSPORTATION, Federal Highway Administration, *Standard Plans for Highway Bridges.* Washington, D.C. (1982) 26 pp.
345. U.S. DEPARTMENT OF COMMERCE, Bureau of Public Roads, *Standard Plans for Highway Bridge Superstructures.* Washington, D.C. (1956) 53 pp.

346. VAIDYANATHAN, H., CHEUNG, M. S., and BEAUCHAMP, J. C., "Extension of Life for Perley Bridge." *TRB Record 664,* Transportation Research Board (1978) pp. 64–76.
347. VAN DALEN, K., TAYLOR, R. J., and BATCHELOR, B. D., "Transverse Prestressing of Prestressed Laminated Wood Bridge Decks." Final Report, International Association for Bridge and Structural Engineering 12th Congress, Vancouver, Can. (Sept. 3–7, 1984) p. 1118.
348. VAN GEMERT, D., VAN AELST, J., DE BUCK, J., and VAN DER MIJNSBRUGGE, J., "Force Transfer in Bonded Concrete-Steel Connections." ("Krachtsoverdracht in Gelijmde Beton Staalverbinden.") *Tijdschrift der Openbare Werken Van Belgie,* Belgium, No. 6 (1980) pp. 1–13. (Flemish)
349. VAN GEMERT, D. A. and MAESSCHALCKT, R., "Structural Repair of a Reinforced Concrete Plate by Epoxy Bonded External Reinforcement." *International Journal of Cement Composites and Lightweight Concrete,* Vol. 5, No. 4 (Nov. 1983) pp. 247–255.
350. VAN GEMERT, D. A. and VANDENBOSCH, M. C. J., "Repair and Strengthening of Reinforced Concrete Structures by Means of Epoxy Bonded Steel Plates." International Conference on Deterioration, Bahrain (Oct. 26–29, 1985) pp. 181–192.
351. VERNIGORA, E., MARCIL, J. R. M., SLATER, W. M., and AIKEN, R. V., "Bridge Rehabilitation and Strengthening by Continuous Post-Tensioning." *J. PCI,* Vol. 14, No. 2 (Apr. 1969) pp. 88–104.
352. VIEST, I. M., "Investigation of Stud Shear Connectors for Composite Concrete Steel T-Beams." *J. ACI,* Vol. 27, No. 8 (Apr. 1956) pp. 875–891.
353. VIEST, I. M., "Review of Research on Composite Steel-Concrete Beams." *J. Struct. Div., Proc. ASCE,* Vol. 86, No. ST6 (Jun. 1960) pp. 1–21.
354. VIRLOGEUX, M., "External Prestressing." ("La precontrainte exterieure.") *Annales de L'Institut Technique du Batiment et des Travaux,* France, No. 420 (Dec. 1983) pp. 115–124, 191. (French)
355. WARNER, R. F., "Strengthening, Stiffening and Repair of Concrete Structures." International Symposium on 'Rehabilitation of Structures,' Maharastra Chapter of the American Concrete Institute, Bombay, *Proc.* (Dec. 1981) pp. 187–197.
356. WARNER, R. F., "Strengthening, Stiffening and Repair of Concrete Structures." *International Association for Bridge and Structural Engineering Surveys,* Vol. 17 (May 1981) pp. 25–41.
357. WARNER, R. F. and KAY, J. N., "Decision Models for the Diagnosis and Treatment of Structural Defects." *International Association for Bridge and Structural Engineering Symposium: Strengthening of Building Structures—Diagnosis and Therapy,* Venezia, Vol. 46 (1983) pp. 267–274.
358. WARRINER, P. C., "Rehabilitation of the High Street Overhead." *Concrete International: Design and Construction,* Vol. 5, No. 7 (Jul. 1983) pp. 53–57.
359. WATTER, F., ALBRECHT, P., and SAHLI, A. H., "End-Bolted Cover Plates," ASCE, *J. Struct. Eng.,* Vol. 111, No. 6 (Jun. 1985) pp. 1235–1249.
360. WEDGWOOD, R. J. L., "Repair of Steel Truss Bridges." National Association of Australian State Road Authorities Bridge Maintenance Seminar, Australian Road Research Board, *Proc.* (Sept. 1979) pp. 1–16.
361. WEI, B. C. F., "Load Distribution of Diaphragms in I-Beam Bridges." *J. Struct. Div., Proc. ASCE,* Vol. 85, No. ST5 (May 1959) pp. 17–55.
362. WEISS, E., "Strengthening of a Steel Bridge by Prestressing." ("Ausbesserung einer Stahlbruecke durch Vorspannung.") *Der Bauingenieur,* West Germany, Vol. 32, No. 5 (May 1957) p. 181. (German)
363. WEST, J.D., "Some Methods of Extending the Life of Bridges by Major Repairs or Strengthening." *Proc. ICE,* Vol. 6, Session 1956–57 (Feb. 1957) pp. 183–215.
364. WESTERBERG, B., "Strengthening and Repair of Concrete Structures.' ("Forstarkning och reparation av betongkonstruktioner.") *Nordisk Betong,* Sweden, No. 1 (1980) pp. 7–13. (Swedish)
365. *Weyerhaeuser Glulam Wood Bridge System: Technical Manual about New and Rehabilitated Bridges.* Weyerhaeuser Company, Tacoma, Wash. (1980) 114 pp.
366. WEYERS, R. E. and CADY, P. D., "Cost-Effective Decision Models for Maintenance, Rehabilitation, and Replacement of Bridges." *TRB Record 950,* Transportation Research Board (1984) pp. 28–33.
367. WICKERSHEIMER, D. J., "Repair Technique for Buckled Wood Truss Members." ASCE, *J. Struct. Eng.,* Vol. 111, No. 5 (May 1985) pp. 949–960.
368. WIENER, D. F. and JIRSA, J. O., "Attaching Steel Members to Reinforced Concrete Elements." *Dynamic Response of Structures, Proc.,* 3rd Conference Organized by the Engineering Mechanics Division, ASCE, Los Angeles, Calif. (Mar. 31-Apr. 2, 1986) pp. 302–309.
369. WILBUR SMITH AND ASSOCIATES, *Bridge Deficiencies in the United States: An Overview of the Problem.* United States Steel Corporation and the ATA Foundation, Washington, D.C. (May 1982) 31 pp.
370. WINFREY, R., *Economic Analysis for Highways.* International Textbook Company, Scranton, Pa. (1969) 923 pp.
371. WOLFORD, C. W. and GANGARAO, H. V. S., "Special Research Report Computer Design of Glued Laminated Timber Bridge Systems." West Virginia Department of Highways Project No. 50, *Report No. WVDOH-50-1* (May 1975) 149 pp.
372. WOELTINGER, O. and BOCK, F., "The Alteration of the High Bridge Levensau over the North-East Canal." ("Der Umbau der Hochbruecke Levensau ueber den Nord-Ostsee-Kanal.") *Der Stahlbau,* West Germany, Vol. 23, No. 12 (Dec. 1956) pp. 295–303. (German)
373. WOODS, S. W., "Rehabilitation of Steel Deck Girder Bridges." *TRB Report 950,* Transportation Research Board (1984) pp. 188–192.
374. "Workshop on Rehabilitation of Existing Bridges Participant Manual." Federal Highway Administration, Contract DTFH61-83-C-00163, Topeka, Kans. (1983).
375. YADLOSKY, J. M., BRUNGRABER, R. J., and KIM, J. B., "Bridge Rehabilitation: An Alternate Approach." *J. Struct. Div., Proc. ASCE,* Vol. 108, No. ST1 (Jan. 1982) pp. 163–176.
376. YOO, C. H. and LITTRELL, P. C., "Cross-Bracing Effects in Curved Stringer Bridges." ASCE, *J. Struct. Eng.,* Vol. 112, No. 9 (Sept. 1986) pp. 2127–2140.

377. ZELLNER, W. and SAUL, R., "Experience in the Remodeling and Restoration of Bridges." ("Ueber Erfahrungen beim Umbau und Sanieren von Bruecken.") *Bautechnik* (Feb. 1985) pp. 51–65.

378. ZUK, W. and MCKEEL, W. T., JR., "Adaptive Use of Historic Metal Truss Bridges." *TRB Record 834,* Transportation Research Board (1981) pp. 1–6.

379. ZUK, W., NEWLON, H., and MCKEEL, W. T., "Methods of Modifying Historic Bridges for Contemporary Use." Virginia Highway and Transportation Research Council (Jun. 1980) pp. 1–80.

THE TRANSPORTATION RESEARCH BOARD is a unit of the National Research Council, which serves the National Academy of Sciences and the National Academy of Engineering. It evolved in 1974 from the Highway Research Board which was established in 1920. The TRB incorporates all former HRB activities and also performs additional functions under a broader scope involving all modes of transportation and the interactions of transportation with society. The Board's purpose is to stimulate research concerning the nature and performance of transportation systems, to disseminate information that the research produces, and to encourage the application of appropriate research findings. The Board's program is carried out by more than 270 committees, task forces, and panels composed of more than 3,300 administrators, engineers, social scientists, attorneys, educators, and others concerned with transportation; they serve without compensation. The program is supported by state transportation and highway departments, the modal administrations of the U.S. Department of Transportation, the Association of American Railroads, the National Highway Traffic Safety Administration, and other organizations and individuals interested in the development of transportation.

The National Academy of Sciences is a private, nonprofit, self-perpetuating society of distinguished scholars engaged in scientific and engineering research, dedicated to the furtherance of science and technology and to their use for the general welfare. Upon the authority of the charter granted to it by the Congress in 1863, the Academy has a mandate that requires it to advise the federal government on scientific and technical matters. Dr. Frank Press is president of the National Academy of Sciences.

The National Academy of Engineering was established in 1964, under the charter of the National Academy of Sciences, as a parallel organization of outstanding engineers. It is autonomous in its administration and in the selection of its members, sharing with the National Academy of Sciences the responsibility for advising the federal government. The National Academy of Engineering also sponsors engineering programs aimed at meeting national needs, encourages education and research, and recognizes the superior achievements of engineers. Dr. Robert M. White is president of the National Academy of Engineering.

The Institute of Medicine was established in 1970 by the National Academy of Sciences to secure the services of eminent members of appropriate professions in the examination of policy matters pertaining to the health of the public. The Institute acts under the responsibility given to the National Academy of Sciences by its congressional charter to be an adviser to the federal government and, upon its own initiative, to identify issues of medical care, research, and education. Dr. Samuel O. Thier is president of the Institute of Medicine.

The National Research Council was organized by the National Academy of Sciences in 1916 to associate the broad community of science and technology with the Academy's purpose of furthering knowledge and advising the federal government. Functioning in accordance with general policies determined by the Academy, the Council has become the principal operating agency of both the National Academy of Sciences and the National Academy of Engineering in providing services to the government, the public, and the scientific and engineering communities. The Council is administered jointly by both Academies and the Institute of Medicine. Dr. Frank Press and Dr. Robert M. White are chairman and vice chairman, respectively, of the National Research Council.

TRANSPORTATION RESEARCH BOARD
National Research Council
2101 Constitution Avenue, N.W.
Washington, D.C. 20418

ADDRESS CORRECTION REQUESTED

NON-PROFIT ORG.
U.S. POSTAGE
PAID
WASHINGTON, D.C.
PERMIT NO. 8970

000015M003
MATERIALS ENGR

IDAHO TRANS DEPT DIV OF HWYS
P O BOX 7129
BOISE ID 83707