NATIONAL COOPERATIVE HIGHWAY RESEARCH PROGRAM
REPORT 321

WELDED REPAIR OF CRACKS IN STEEL BRIDGE MEMBERS

E. N. Gregory, G. Slater, and C. C. Woodley
The Welding Institute
Abington, Cambridge, England

RESEARCH SPONSORED BY THE AMERICAN ASSOCIATION OF STATE HIGHWAY AND TRANSPORTATION OFFICIALS IN COOPERATION WITH THE FEDERAL HIGHWAY ADMINISTRATION

AREAS OF INTEREST

Structures Design and Performance
General Materials
Maintenance
(Highway Transportation, Public Transit, Rail Transportation)

TRANSPORTATION RESEARCH BOARD
NATIONAL RESEARCH COUNCIL
WASHINGTON, D.C.
OCTOBER 1989

NATIONAL COOPERATIVE HIGHWAY RESEARCH PROGRAM

Systematic, well-designed research provides the most effective approach to the solution of many problems facing highway administrators and engineers. Often, highway problems are of local interest and can best be studied by highway departments individually or in cooperation with their state universities and others. However, the accelerating growth of highway transportation develops increasingly complex problems of wide interest to highway authorities. These problems are best studied through a coordinated program of cooperative research.

In recognition of these needs, the highway administrators of the American Association of State Highway and Transportation Officials initiated in 1962 an objective national highway research program employing modern scientific techniques. This program is supported on a continuing basis by funds from participating member states of the Association and it receives the full cooperation and support of the Federal Highway Administration, United States Department of Transportation.

The Transportation Research Board of the National Research Council was requested by the Association to administer the research program because of the Board's recognized objectivity and understanding of modern research practices. The Board is uniquely suited for this purpose as: it maintains an extensive committee structure from which authorities on any highway transportation subject may be drawn; it possesses avenues of communications and cooperation with federal, state, and local governmental agencies, universities, and industry; its relationship to the National Research Council is an insurance of objectivity; it maintains a full-time research correlation staff of specialists in highway transportation matters to bring the findings of research directly to those who are in a position to use them.

The program is developed on the basis of research needs identified by chief administrators of the highway and transportation departments and by committees of AASHTO. Each year, specific areas of research needs to be included in the program are proposed to the National Research Council and the Board by the American Association of State Highway and Transportation Officials. Research projects to fulfill these needs are defined by the Board, and qualified research agencies are selected from those that have submitted proposals. Administration and surveillance of research contracts are the responsibilities of the National Research Council and the Transportation Research Board.

The needs for highway research are many, and the National Cooperative Highway Research Program can make significant contributions to the solution of highway transportation problems of mutual concern to many responsible groups. The program, however, is intended to complement rather than to substitute for or duplicate other highway research programs.

NCHRP REPORT 321

Project 12-27 FY '84

ISSN 0077-5614

ISBN 0-309-04618-1

L. C. Catalog Card No. 89-51237

Price $8.00

NOTICE

The project that is the subject of this report was a part of the National Cooperative Highway Research Program conducted by the Transportation Research Board with the approval of the Governing Board of the National Research Council. Such approval reflects the Governing Board's judgment that the program concerned is of national importance and appropriate with respect to both the purposes and resources of the National Research Council.

The members of the technical committee selected to monitor this project and to review this report were chosen for recognized scholarly competence and with due consideration for the balance of disciplines appropriate to the project. The opinions and conclusions expressed or implied are those of the research agency that performed the research, and, while they have been accepted as appropriate by the technical committee, they are not necessarily those of the Transportation Research Board, the National Research Council, the American Association of State Highway and Transportation officials, or the Federal Highway Administration, U.S. Department of Transportation.

Each report is reviewed and accepted for publication by the technical committee according to procedures established and monitored by the Transportation Research Board Executive Committee and the Governing Board of the National Research Council.

Special Notice

The Transportation Research Board, the National Research Council, the Federal Highway Administration, the American Association of State Highway and Transportation Officials, and the individual states participating in the National Cooperative Highway Research Program do not endorse products or manufacturers. Trade or manufacturers' names appear herein solely because they are considered essential to the object of this report.

Published reports of the

NATIONAL COOPERATIVE HIGHWAY RESEARCH PROGRAM

are available from:

Transportation Research Board
National Research Council
2101 Constitution Avenue, N.W.
Washington, D.C. 20418

Printed in the United States of America

FOREWORD

By Staff
Transportation Research Board

This report contains the findings of a study that was performed to identify and evaluate welding methods for repair of cracked steel bridge members in order to restore their load carrying capacity and fatigue life. The report provides a manual of recommended practice for steel bridge member repair through field welding that, if followed, should lead to good quality repair welds. The manual is based on an examination of bridge repair techniques previously used in the field and typical bridge member repairs performed during the course of this study. The contents of this report will be of immediate interest and use to bridge engineers, welding engineers, researchers, specification writing bodies, and others concerned with the repair of existing steel bridge members in the field.

Steel bridges are susceptible to fatigue cracking caused by numerous cycles of heavy truck loadings. Because reliable, practical methods of detection are not available for field use, small fatigue cracks are not usually found during routine inspection. In some cases, cracks may grow undetected until they reach a stage where the load carrying capacity of an individual member has been severely reduced, and it becomes essential to repair it.

At the present time, many bridge engineers believe that bolted splices and member replacement are the only reliable methods of dealing with members with extensive cracking. However, many members cannot tolerate the loss of section required for bolted splices. Where replacement is possible during bridge rehabilitation, long delays may be imposed on the contractor while waiting for fabrication and delivery of new members after cracks are discovered that were not previously known to exist. In some cases with extensive cracking, entire structures have been replaced with the cost of the replacement and traffic detours running into millions of dollars.

NCHRP Project 12-27, "Welded Repair of Cracks in Steel Bridge Members," was initiated with the objective of demonstrating the reliability of welded repairs and to provide guidance on effective methods of welded repair of fatigue cracks and brittle fractures in steel bridge members so that the economies of welding can be effectively realized. The research was performed at The Welding Institute, in Cambridge, England, and included a comprehensive literature study of previous welded repairs and an experimental program to demonstrate and refine welding techniques.

This report summarizes the findings from that study. The major portion of this report is a manual of recommended practice for repair welding in the field.

The research determined that fatigue was the direct cause of cracking in 125 of 130 documented cases examined in this study. The vast majority of these cracks

initiated at a connection or splice weld. Therefore, if sound repairs could be performed on these cracked welds, the original member capacity could be restored with minimal complication. If the condition that leads to fatigue cracking can be removed, member strength and capacity can be improved.

The experimental program consisted of fatigue testing, fracture toughness testing, and the development of repair procedures. Girders were fatigue tested until cracks grew to a predetermined length. The girder was then repair welded and again tested. The tests demonstrated that repair welds had at least the same fatigue life as the original shop weld. The fracture toughness tests demonstrated that multiple repair welds could be made with minimal toughness reductions in the heat-affected zone. The tests conducted during the course of this research showed that welded repairs of fatigue cracks give satisfactory mechanical properties in respect to both fatigue and fracture toughness.

This work demonstrates that welding is an effective method for repair of cracks. Most fatigue cracks in steel bridges should be capable of being successfully and economically repaired, completely or in part, by welding, provided that a good quality weld can be guaranteed. The manual of recommended practice included in this report should provide the guidance necessary to make good quality welds.

CONTENTS

ACKNOWLEDGMENTS

The work reported herein was performed under NCHRP Project 12-27 by The Welding Institute in conjunction with Atlas Machine & Iron Works Inc. The Welding Institute was the contractor for this study and the assistance provided by Atlas Machine & Iron Works Inc in setting up and participating in some of the interviews was under a subcontract with The Welding Institute.

Neville Gregory, Head, Advisory Section, Manufacturing Systems Department, The Welding Institute was the principal investigator. The other authors of this report are Graham Slater, Senior Research Engineer, Design Engineering Department; and Chris Woodley, Head, Design Engineering Department.

The work was carried out with the assistance of Werner H. Quasebarth, President and Chief Executive Officer of Atlas Machine & Iron Works Inc and Colin J. P. Eileens, Welding Engineer at The Welding Institute. The experimental program was compiled with the assistance of Dr. T. R. Gurney, Dr. S. J. Maddox, Dr. S. J. Garwood, Dr. T. G. Davey and Mr. P. H. M. Hart. The final report was reviewed by Dr. T. R. Gurney and Dr. G. R. Salter. The experimental program was carried out by Mr. J. Haugh, Mr. G. H. Dixon, Mr. D. G. Millard, Mr. W. J. Noonan, Mr. M. J. Neaves, Mr. W. F. Houchen, Mr. P. Kerr, and Mr. J. A. E. Dobbs.

WELDED REPAIR OF CRACKS IN STEEL BRIDGE MEMBERS

SUMMARY

Under certain conditions steel bridges may be susceptible to cracking in service, the most common forms of which are fatigue, caused by numerous cycles of heavy truck loading, or arrested brittle fractures. In some cases, cracks may grow undetected until they reach a stage when the load carrying capacity of an individual member has been severely reduced and it becomes essential to repair it.

At the present time, many bridge engineers believe that bolted splices and member replacement are the only reliable methods of dealing with members having extensive cracks. However, the loss of section required for bolted splices may overstress the member. Where replacement is possible during a bridge repair or reconstruction project, long delays may be imposed on the contractor while waiting for fabrication and delivery of new members. Cracks may not be discovered until the project is initiated and the full extent of the damage may not be established until some of the bridge members have been removed.

It seems possible that many of these cracked members could be repaired by welding. However, before this approach will receive general acceptance it is essential to demonstrate the reliability of welded repairs. It is also necessary to provide guidance on effective methods of welded repair of fatigue cracks and brittle fractures in steel bridge members so that the economy of welding can be effectively realized. The objective of NCHRP Project 12-27 was to achieve those ends and to provide guidance for the welded repair of cracked steel bridge members in the form of a manual of recommended practice.

The approach taken to fulfill the research objective was through the accomplishment of the following two major tasks: Literature Survey and Experimental Work.

Literature Survey

A comprehensive literature survey (reported in detail in Appendix A) was carried out to identify as much as possible of the published work relating directly to repair of cracking in steel bridge members. A secondary area of interest covered laboratory research into the repair of cracked bridge members. To supplement the information obtained from the literature, interviews were undertaken with personnel from departments of transportation, bridge builders, consultants specializing in bridge maintenance, fabrication and repair, and members of the NCHRP Project Panel C12-27.

The critical literature survey and the results of interviews with bridge operators, fabricators, and consultants provided the following information.

Analysis of 130 cases of cracking showed that all but 5 of the 130 cases can be directly attributed to fatigue. This is hardly surprising, because all bridges are subjected to fatigue loading as a result of the passage of traffic. Corrosion, also, often becomes a major contributory problem after a period of time, but it may be essentially secondary in nature if its effect is to increase nominal stresses by loss of material.

Alternatively, the combination of cyclic stresses and a corrosive environment may lead to crack growth by a mechanism known as corrosion fatigue. This is a problem

of great complexity because of the wide variety of loading spectra and corrosive environments that may occur.

Brittle fracture, general yielding, and buckling are rarely primary modes of failure in bridges in service. This is because, unlike fatigue, they are not time dependent, but essentially stress dependent. Because the highest static loads in bridges are quite often experienced during erection, it follows that this is when these modes of failure are most likely to occur. They do, however, constitute the usual secondary, or final, mode of failure during service. After a period of fatigue crack growth, the resulting increase in stress due to loss of section, and increase in stress intensity due to the sharpness of the fatigue crack, may lead to buckling under compressive loading or yielding in tough materials, or brittle crack extension in less tough materials.

The vast majority of fatigue cracking in welded structures initiates at or in the weld. This is as expected, because, in general, welded joints have inferior fatigue performance in comparison to nonwelded details. Cracks may also be initiated from plug welds, stud welds, and cope holes.

A consistent picture was observed from state to state, as far as inspection and maintenance were concerned.

Routine inspection, often in association with maintenance and/or painting, has been moderately successful at detecting fatigue cracking before a critical condition has been reached. This is due more to a general state of large fatigue crack tolerances in bridges because of adequate toughness, rather than the ability to detect very small cracks. Typically, cracks have been found when they have reached a surface length of 2 to 6 in., whereas in exceptional cases a critical condition may not be reached until the crack is 5 to 10 times this length. Long cracks may have been propagated by brittle fracture and then arrested.

The information on crack discovery contained in the literature suggested that in some cases the frequency of routine inspection may have been inadequate for detecting the existence of fatigue cracks in the early stages of crack growth.

However, it must be recognized that the problems involved in bridge inspection may be considerable. In the first place, many fatigue crack initiation sites are difficult to see properly during routine inspection, and in any case it is not possible on economic grounds to carry out detailed inspection of every part of a bridge. Secondly, even when a detail can be adequately inspected, cracks with a surface length smaller than 0.25 in. are unlikely to be detected. However, given that the period between inspections is typically 2 years, and that the rate of fatigue crack propagation is a function of crack size, it has also to be recognized that, in a heavily traveled bridge, a crack that was "just missed" at one inspection may have grown considerably by the time of the next inspection. There is, therefore, a need to ensure that the structure is "safe" in the presence of such larger cracks and possibly also to consider increasing inspection frequency with the age of the bridge.

The incidence of damage according to type varied from state to state. In some, corrosion was the major problem; in others, accident damage; and in the remainder, fatigue cracking. In one state, corrosion of the A588 steel, particularly heavy pitting of pin plate links, was cited as the major problem. Generally, corrosion is repaired by the addition of reinforcing material or section replacement. Corrosion is most prevalent amongst older, rivetted bridges, and existing rivet holes can be used for fixing new material to the structure. In many states, welding was regularly used to attach new material, and one particular problem encountered was that of poor fit-up, when heavy corrosion left a very uneven and irregular plate surface. Repair of accident damage normally involves straightening, with perhaps some welding or bolting of new or additional material.

Confidence, or lack of it, seems to be the key to repair welding. Those states that

did not like to weld in the field all stated that it was impossible to obtain welding and inspection personnel of a sufficiently high standard to produce a sound welded repair. Most, however, would be prepared to use welding as a repair method, if it was proven in advance to be successful, and if guidance was available on the subjects of inspection and quality control. Only one bridge owner claimed he would never use welding for repair of cracks.

Experimental Work

The experimental work, described in detail in Appendix B, consisted of three distinct parts: (1) fatigue testing, (2) fracture toughness testing, and (3) development of repair procedures.

Fatigue Testing. The fatigue testing program consisted of fatigue testing of girders until cracking occurred, followed by welded repair of the fatigue cracks and further fatigue testing.

The results of the fatigue tests on girders repaired either in the laboratory or out of doors under conditions of restricted access showed that there was no deterioration in fatigue strength. Furthermore, the fatigue strength could usually be increased by grinding the toes of fillet welds or the surfaces of cope holes, which had the effect of delaying the initiation of fatigue cracking.

A limited number of repairs carried out under dynamic loading on one test specimen only, which was repaired twice in the laboratory, showed that it was possible to effect a repair under these conditions. However, a special procedure had to be used to prevent hot cracking of the weld metal which was under strain when the weld groove opened and closed.

Fracture Toughness Tests. Fracture toughness testing was carried out on the following simulated repairs: (1) repairs to webs of girders, (2) repairs to flanges of girders, and (3) multiple repair welds in which the heat-affected zone was subjected to up to 4 thermal cycles.

The simulated repair tests on 3-in. thick flanges in A36 steel welded overhead showed that the toughness of the weld determined by Charpy V-notch testing was at least 3 times as high as that of the base metal, and the heat-affected zone toughness was 50 percent higher. In the heat-affected zone the tip of the notch was located in the coarse-grained area close to the fusion boundary.

The simulated repair tests on 1-in. thick webs in A588 steel welded in the vertical or horizontal positions showed that the toughness of the weld metal was at least 74 percent higher than that of the base metal, and the heat-affected zone toughness was at least 21 percent higher. The foregoing comparisons are based, in each case, on the averages of three Charpy V impact tests, and the results of tests on welds in A588 steel are conservative because the weld metal and heat-affected zones were tested at −30°F whereas the plate was tested at 10°F.

Multiple repair welds in non-aluminum treated A36 steel 3 in. thick had heat-affected zones having slightly lower toughness than the unaffected base metal. There was insufficient evidence to show that this was caused by strain age embrittlement.

Development of Repair Welding Procedures. Procedures were developed for repair welding in all positions and typical locations of fatigue cracks in webs and flanges of girders.

Test girders were used to develop procedures for the repair of "cracks" that were marked on the steel surface.

The type and location of these cracks were as follows: (1) partial depth crack at toe of fillet weld attaching cover plate, (2) full depth crack at toe of fillet weld attaching cover plate, (3) full depth crack branching crack in web, (4) full depth

crack in web initiated at toe of fillet weld at end of stiffener, (5) full depth crack at edge of flange butt weld, (6) full depth crack at edge of web butt weld, and (7) full depth crack in web initiated from hole.

All the full depth "cracks" were flame cut along the lines marked so that the "crack" faces were separated by approximately ⅛ in.

These cracks were removed by mechanical methods, such as grinding or by a high speed rotary tungsten carbide burr, or by thermal methods, i.e., air carbon arc gouging or by gouging shielded metal arc electrodes designed for this purpose. Repair welding procedures were then carried out.

The tests conducted during the course of this research showed that the welded repairs of fatigue cracks give satisfactory mechanical properties in respect to both fatigue and fracture toughness. The work demonstrated that welding is an effective method for a repair of cracks. The majority of fatigue cracks in steel bridges should be capable of being successfully and economically repaired, completely or in part, by welding, provided that a good quality weld can be guaranteed. The experimental program of repair and testing demonstrated the validity of this viewpoint.

The literature survey, the interviews, and the experimental program formed the basis for the compilation of the comprehensive repair procedures in the main text of this report, which constitutes the manual on "Welded Repair of Cracks in Steel Bridge Members." (*Note: At the time of writing this report, the AASHTO/AWS D1.5–88 Bridge Welding Code was not available and, therefore, some of the recommendations in the manual may not comply with the Bridge Welding Code.*)

CHAPTER ONE

INTRODUCTION

Fatigue cracking of welded details is the most common type of bridge problem even though fatigue, and the factors that influence it, are recognized at the design stage. Fatigue occurs by the formation and propagation of a crack caused by repeated or fluctuating loading. This does not mean, however, that the structure has been brought to the point of collapse because in some way the normal properties of the material have been changed by repeated loading. Sudden collapse of a member might occur; but, if it does, it is generally because the crack has sufficiently reduced the load carrying capacity. On the other hand, extensive fatigue cracks may exist in many steel bridges without seriously affecting the load carrying capacity.

Bridges in service are not subjected to purely static loading. Variations in live load resulting from normal traffic flow give rise to fluctuation of the working stresses. These changes may range from a simple cyclic fluctuation to a completely random variation. Therefore, it is recognized that it is not sufficient to design to some arbitrary safety factor based on a fraction of the yield strength of the material and assume that this will ensure against fatigue. A factor of safety that is sufficiently large to eliminate the possibility of fatigue in a welded design could not be applied without making the structure overdesigned and uncompetitive.

In the design of a structure subjected to fatigue loading, the working stresses must be related to the fatigue strength for the particular joint configurations required. For various reasons all of the information necessary to achieve this may not be available.

Accurate working stresses or stress histories may not be obtainable or the number of repetitions of loading may be unknown; the bridge designer may not be able to predict the volume of traffic that may use a bridge over the foreseeable future. The unpredictable and ever increasing loads carried by trucks also have a direct influence on the fatigue life of a bridge.

Given the fact that fatigue cracks are likely to be initiated at some stage in the life of a steel bridge, the behavior of such cracks is important. The rate of propagation of a fatigue crack can vary—depending on the material, the type of component, and the nature of the applied stress.

In a highly redundant structure a crack may initiate in an area of high stress and propagate to a low stressed area where it may stop altogether. In other members, the formation of a crack may increase the nominal stress because of the reduction in cross-section, so that the rate of propagation will increase as the crack progresses until the load on the remaining cross-section produces tensile failure, severe deformation by buckling or yielding of the structure or sudden failure by brittle fracture.

At the present time, many bridge engineers believe that bolted splices and member replacement are the only reliable methods of dealing with cracks. However, some members may not be able to tolerate, without overstress, the loss of section or the additional weight required for bolted splices. Where replacement is possible, long delays may be imposed on the contractor while waiting for fabrication of new members, with the cost of the replacement and detouring traffic running into millions of dollars. The use of welding for the repair of cracks is generally a more economical solution.

There is a need to demonstrate the reliability of welded repairs and to provide guidance for effective methods of welded repair of fatigue cracks and brittle fractures in steel bridge members, so that the economies of repair welding can be effectively realized.

NCHRP Project 12-27 was initiated in response to that need. The overall objective of the research described in this report was to identify and evaluate welding methods for repair of cracked steel bridge members to restore their load carrying capacity and fatigue resistance. The ultimate objective was to produce a manual comprising recommended practice for the repair of fatigue cracks. In pursuing these goals, the investigation was divided into two major efforts: (1) a comprehensive literature survey, supplemented by interviews with personnel from departments of transportation, bridge builders, and consultants specializing in bridge maintenance, fabrication and repair; and (2) a laboratory test program.

Details of the literature search of published work on the repair of cracks in steel bridge members and of relevant research into repair of cracks are documented in Appendix A. Documentation of the experimental program, consisting of fatigue testing, fracture toughness testing, and the development of repair procedures for typical fatigue crack locations in girders, is covered in Appendix B.

The repair welding procedures developed during the course of Project 12-27 have been incorporated into this user's manual, which gives guidance on suitable methods for the repair of cracks in steel bridge members.

Fatigue cracks may propagate through both the weld metal and parent plate and may be discovered when less than an inch in length, in which case repair may be relatively simple, consisting of a gouging or grinding operation without any subsequent welding. Another method of repair of shallow cracks (1/8 in. or less) is by sealing the cracks with a gas tungsten arc (GTA) torch, without the addition of filler metal. Deeper cracks can be repaired by removal of metal to form a suitable groove which is then filled with weld metal.

Because of the extended periods between routine inspection, fatigue cracks may propagate for a significant distance and may contain several branches before being discovered. In such cases, a choice has to be made between repair by gouging and welding and by replacement of a major part of a member by welding in a patch.

The remainder of this report relates to the overall and ultimate objectives of this project—the evaluation of existing welding methods and the procedures developed, and recommended for use, from this research. Guidelines on inspection for the presence of cracking are given in Chapter Two, including discussion on the requirements for qualification of personnel, for both inspectors and welders. The welding procedures for the repair of cracks are detailed in Chapters Three and Four. Techniques for improving the fatigue strength of welds by toe dressing and other techniques are described in Chapter Five. The procedure qualification of repair welds and the performance qualification of welders engaged on repair work are considered in Chapter Six. Methods of nondestructive examination are included in Chapter Seven. Conclusions are stated in Chapter Eight. A bibliography of references related to the subject research follows that chapter. Appendixes A and B ("Literature Survey" and "Experimental Work" respectively) provide detailed documentation of the work done to produce the repair welding procedures presented in this manual. The contents of these appendixes are not published herein. They are listed, however, on page 45 for the convenience of qualified researchers in the subject area, who may obtain loan copies, or microfiche may be purchased, of the agency final report ("Welded Repair of Cracks in Steel Bridge Members," March 1989) by written request to the NCHRP, Transportation Research Board, 2101 Constitution Avenue, NW, Washington, D.C. 20418.

CHAPTER TWO

INSPECTION

GENERAL

Inspection of a bridge should be carried out in-service as part of the routine maintenance.

The discovery of a fatigue crack at an early stage of its life can save much time and effort by a simple repair, instead of the extensive repair procedure that may be required if a crack is allowed to grow to several feet in length.

The chance of finding cracks at an early stage in their lives is much higher if qualified and experienced inspection personnel are employed. Adequate qualifications are also essential for inspectors involved in the repair of cracks by welding and the qualifications required are no different from those necessary for inspectors involved in bridge erection.

Bridge inspection and welding inspection are two quite separate aspects of inspection that require different training and

qualifications. Bridge inspection is the use of techniques required to determine the physical condition of the structure, whereas welding inspection is the application of methods to determine the quality of welding.

QUALIFICATIONS OF INSPECTORS

Bridge Inspection

As specified in the AASHTO *Manual for Maintenance Inspection of Bridges 1983,* the individual in charge of a bridge inspection organizational unit shall possess the following minimum qualifications: (1) be a registered professional engineer; or (2) be qualified for registration as a professional engineer under the laws of the State; or (3) have a minimum of 10 years experience in bridge inspection assignments in a responsible capacity and have completed a comprehensive training course based on the Bridge Inspector's Training Manual.

A bridge inspection team operating as part of the organizational unit shall be headed by an individual with the following minimum qualifications: (1) have the qualifications as listed for the organizational unit head; or (2) have a minimum of 5 years' experience in bridge inspection assignments in a responsible capacity and have completed a comprehensive course based on the Bridge Inspector's Training Manual.

Welding Inspection

Welding inspectors should be suitably qualified, for example, to one of the following standards: (1) an AWS Certified Welding Inspector (CWI) qualified and certified in accordance with the provisions of AWS QC1, Standard for Qualification and Certification of Welding Inspectors; or (2) qualified by the Canadian Welding Bureau (CWB) to the requirements of Canadian Standard Association (CSA) Standard W178.2 Certification of Welding Inspectors; or (3) an Engineer or Technician trained to the satisfaction of the State Department of Transportation.

The Inspector may be supported by Assistant Inspectors who may perform specific inspection functions under the supervision of the Inspector. Assistant Inspectors should be qualified by training and experience to perform the specific functions to which they are assigned. The work of Assistant Inspectors should be regularly monitored by the Inspector.

RESPONSIBILITIES OF INSPECTORS

In-Service Inspection

The Bridge Inspector should compile a check list of all welded details and locations where fatigue cracking is most likely, and suitable documentation should be compiled in the form of a simple In-Service Inspection Report (Table 1). If defects are found, a more detailed Inspection Report should be compiled (Table 2).

Inspection of Repair Welding

The Welding Inspector should ensure that all welding procedures are qualified and covered by an approved Welding Procedure Specification or are qualified by tests in accordance with Chapter Six. Welding Procedure Specifications and Welding Procedure Qualification Tests should be subject to the approval of the Engineer responsible for bridge maintenance prior to commencement of repair.

The Inspector should inspect the welding and ancillary equipment to be used for repair work to ensure that it is suitable.

Inspection of Welder Qualifications

The Inspector should permit repair welding to be performed only by welders who are qualified in accordance with the provisions of Chapter Six, "Qualification." When the quality of a welder's work does not appear to be of the required standard, the Inspector should require the welder to carry out a simple test, such as a fillet weld break test, described in the ANSI/AWS Structural Welding Code D1.1–88* to demonstrate his ability. The Inspector should require requalification of any welder who cannot prove that he has used the shielded metal arc process within the previous 6 months.

Although the welder may have passed a formal performance qualification test it is advisable for him to carry out a practice repair weld at the actual site of the required repair, duplicating all conditions that will be encountered. The practice repair should be carried out immediately before starting the actual repair. This will verify that the welder is prepared and also gives him an opportunity to adjust the equipment before starting to weld on the bridge.

Inspection of Work and Records

The Inspector should make certain that the quality of all repair welds meets the requirements of this report.

NONDESTRUCTIVE TESTING PERSONNEL

Personnel performing magnetic particle, dye penetrant, or ultrasonic testing should be qualified in accordance with the current edition of the American Society for Nondestructive Testing, *Recommended Practice Number SNT-TC-1A.* Only individuals qualified to NDT Level II may perform nondestructive testing.

INSPECTION OF BRIDGES

Locations to be Inspected

During routine inspections particular attention should be paid to welded details that have been found to be susceptible to initiation of fatigue failures, for example:

1. *Flanges:* (a) flange groove welds, particularly where reinforcement is not ground smooth; (b) cover-plate terminations; (c) cover-plate groove welds, particularly where reinforcement is not ground smooth; and (d) flange connections.
2. *Webs:* (a) web groove welds; (b) misplaced holes; (c)

*Throughout this manual, all welding requirements have been referenced to the ANSI/AWS D1.1–88 welding code. At the time this work was performed, the AASHTO/AWS D1.5–88 Bridge Welding Code was not available; therefore, some of the recommendations in the manual may not comply with those in the Bridge Welding Code.

Table 1. In-service inspection report form.

IN-SERVICE INSPECTION REPORT

1. Name of bridge: .....

2. Location (attach drawing) .....

3. Detail inspected: .....

   Location: .....

   Satisfactory: [ ] Check relevant box.

   Defective: [ ]

   Nature of defect:

   .....
   .....
   .....
   .....
   .....
   .....

4. Date of inspection: .....

5. Inspected by: .....

stiffener welds, especially intermittent welds; (d) stiffener groove welds; (e) intersecting stiffeners; (f) stiffener connections; and (g) web attachments.

3. Intersecting girders, for example, flanges passing through webs, beam to column connections.
4. Box girder corner welds.
5. Low quality repairs and plug welds.
6. Tack welds.
7. Rivet holes or bolt holes.
8. Coped or blocked flanges where part of the flange or both the flange and web are cut back to provide clearance at an end connection.

Inspection can be carried out by the use of a hand magnifying lens, dye penetrant, magnetic particle inspection or by ultrasonic examination. Careful inspection can reveal the presence of cracks as small as 0.25 in. long.

INSPECTION PROCEDURE

General

Inspection should be carried out in a logical and systematic manner to ensure that the time available for inspection is used to the maximum possible extent.

Table 2. Inspection report form.

INSPECTION REPORT

1. Name of bridge: .....

2. Location (attach drawing): .....

3. Nature of damage and extent (e.g. buckling, cracking, member displacement. Attach sketches showing types of joints and section thicknesses): .....
   .....
   .....
   .....

4. Date of damage: .....

5. Date of inspection: .....

6. Cause of damage: .....

7. Steel specification or composition: .....

8. Mechanical properties specified:
   Yield strength .....ksi Tensile strength .....ksi
   Charpy impact strength ..... ft/lbf at .....°F

9. Site conditions. (Location of damaged members, e.g. height above ground): .....
   .....

10. Remarks: .....
    .....
    .....
    .....

11. Inspected by: .....

Sequence of Operations and Reporting

1. Check visually for major distortion of structural members which may indicate likely locations of cracks.
2. Carry out visual inspection of painted details to look for breaks in the paint film and corrosion stains at broken paint films.
3. Supplement suspicious looking areas with magnetic particle or ultrasonic inspection to search for surface breaking cracks.
4. If any indication of cracking is found, clean the region locally, removing paint coats and corrosion products either by blast cleaning or grinding.

5. Check length of visible crack by magnetic particle inspection or dye penetrant examination.

6. Fill in In-service Inspection Report (Table 1) as work proceeds.

7. If cracking or other defects are observed complete Inspection Report (Table 2).

8. Apply temporary protective coating to ground areas of steel to prevent rusting.

CHAPTER THREE

WELDABILITY OF BRIDGE MATERIALS

GENERAL

Weldability is defined in ANSI/AWS A3.0-85 as the capacity of material to be welded under the imposed fabrication conditions into a specific, suitably designed structure and to perform satisfactorily in the intended service. This definition has particular relevance to the repair of cracks in bridges because adverse conditions are often present that could prevent the attainment of a successful repair unless stringent precautions are taken.

Such adverse conditions include a high susceptibility to cracking of the steel base material under conditions of high restraint, and procedures to prevent this are described in this chapter. Bridge steels frequently become magnetized and the magnetic field may be strong enough to affect the welding arc causing it to deflect, an effect known as arc blow. In severe cases of arc blow weld quality can suffer, and methods to avoid this are described.

The repair of bridges by welding may involve a steel that is covered by a current ASTM specification; on the other hand, many older bridges were constructed from steels the specifications of which are out of date.

The most commonly used steels in bridge construction over the past 50 years, including those in current use, are given in Tables 3 and 4.

It is possible that repairs may be required to some older bridges that were constructed from wrought iron plates and forgings riveted together. Therefore, it is appropriate to give some guidance on the welding of this material.

Table 3. Tensile properties of ASTM structural steels that have been used in bridge construction.

ASTM	Specification		Tensile Strength ksi	Min Yield Strength ksi
A7	Steel for Bridge and Buildings		60–75	33
A36	Structural Steel		58–80	36
A242	High Strength Low Alloy Structural Steel		63–70a	42–50(a)
A373	Structural Steel for Welding		58–75	32
A441	High Strength Low Alloy Structural Manganese Vanadium Steel		60–70a	40–50(a)
A572	High Strength Low Alloy Columbium Vandadium Steel of Structural Quality	Gd 42 Gd 50	60 min 65 min	42 50
A588	High Strength Low Alloy Structural Steel with 50ksi Minimum Yield Point to 4in thick		63–70a	42–50(a)
A514	High Yield Strength Quenched and Tempered Alloy Steel Plate Suitable for Welding		100–130a	90–100(a)
A517	Pressure Vessel Plates, Alloy Steel, High Strength, Quenched and Tempered		105–135a	90–100(a)
A500	Cold Formed Welded and Seamless Carbon Steel Structured Tubing in Rounds and Shapes	Gd A Gd B	45 min 58 min	33 42
A501	Hot Formed Welded and Seamless Carbon Steel Structural Tubing		58 min	36
A618	Hot Formed Welded and Seamless High Strength Low Alloy Structural Tubing	Gd I Gd II Gd III	70 min 70 min 65 min	50 50 50

(a) Depending on Thickness

Table 4. Composition of ASTM structural steels that have been used in bridge construction.

ASTM Specification	Type or Grade	AASHTO Designation	Composition, percent a C	Mn	P	S	Si	Cr	Ni	Mo	V	Other
A7			Not Specified	-	0.05	0.063	-	-	-	-	-	Cu 0.18 min when specified
A36			0.29	0.80–1.20	0.04	0.05	0.15–(b) 0.40	-	-	-	-	Cu 0.20 min when specified
A242	1		0.15	1.00	0.15	0.05	-	-	-	-	-	Cu 0.20 min
A373			0.30	0.50–0.90	0.05	0.063	0.15–0.30(c)	-	-	-	-	Cu 0.20 max when specified
A441			0.22	0.85–1.25	0.04	0.05	0.30	-	-	-	-	Cu 0.20 min
A572	42		0.21	1.35	0.04	0.05	0.30	-	-	-	-	Cu 0.20 min
	50	M223	0.23	1.35	0.04	0.05	0.30	-	-	-	-	Cu 0.20 min
A588(d)	A	M222	0.10–0.19	0.90–1.25	0.04	0.05	0.15–0.30	0.40–0.65	-	-	0.02–0.10	Cu 0.25–0.40
	B	M222	0.20	0.75–1.25	0.04	0.05	0.15–0.30	0.40–0.70	0.25–0.50	-	0.01–0.10	Cu 0.20–0.40
A514	A(e)	M244	0.15–0.21	0.80–1.10	0.035	0.04	0.40–0.80	0.50–0.80	-	0.18–0.28	-	Zr 0.05–0.15 B 0.0025
A517	A(f)	M244	0.13–0.23	0.74–1.20	0.035	0.04	0.35–0.86	0.46–0.84	-	0.15–0.31	-	B 0.0025
A500 A501			0.30	-	0.05	0.063	-	-	-	-	-	Cu 0.18 when specified
A618	I(a)		0.18	1.04	0.16	0.063	-	-	-	-	-	Cu 0.18 min
	II		0.26	1.30	0.05	0.063	0.33	-	-	-	-	V 0.01 min Cu 0.18 min
	III		0.27	1.40	0.05	0.06	0.35	-	-	-	-	V 0.01 min

(a) Single values are maximum unless otherwise noted.
(b) Over 1½in thick.
(c) Over 1in thick.
(d) 9 grades of A588 steel are available with slightly different compositions, some containing Mo.
(e) 16 grades are available.
(f) Grades A,B,C,D,J are for 1.25in max thickness. Grades G,H,K,L,M,R are for 2in max thickness.

WROUGHT IRON

This is a duplex material consisting of low carbon iron (carbon 0.035 percent max.) which is rolled into plate together with some of the slag used in the refining process. The resultant composite material consists of iron containing drawn out stringers of slag.

The chemical composition of a sample of wrought iron will give some indication of its weldability, i.e., if the carbon and sulfur contents are low, this shows that the iron was correctly manufactured in the furnace. Carbon should be a maximum of 0.035 percent, and the sulfur content should be no higher than 0.02 percent.

Subsequent treatment, consisting of rolling or hammering, elongates the slag particles to form long stringers which, for good weldability, should have low width and depth; in other words, they should be more or less one dimensional. If the mechanical working has not been thorough and the slag stringers have a large cross section, difficulties can occur in welding by the formation of voids at the slag/metal interface because of stressing in the through thickness direction. This is likely to occur with fillet welds on low quality wrought iron. Butt welds on such iron may contain numerous slag inclusions and also some porosity, although the mechanical properties will generally overmatch those of the iron.

High quality wrought iron does not give the foregoing problems in welding and, while the chemical composition may suggest good weldability, it will give no indication of the volume or distribution of slag. Longitudinal and transverse microsections will show the distribution of slag and can give an indication of the weldability; but, if a large enough sample of the iron can be obtained, a welding procedure test should be carried out. Most repairs to wrought iron consist of either bolting or welding on reinforcing plates of steel.

The plates attached by welding have a fillet weld all around and a simple welding procedure test, if plate is available, consists of a fillet weld between overlapping plates of carbon steel and wrought iron. Macrosections should be taken to ensure the soundness of the welded joint in the test piece.

The ASTM A42 Specification for Wrought Iron Plates, now obsolete, specified the minimum requirements for the longitudinal properties of wrought iron plates produced by standard rolling operations as follows: tensile strength (min.), 48,000 psi; yield point (min.), 27,000 psi; and elongation in 8-in. (min.), 14 percent.

There is no difficulty in producing welds in wrought iron having properties at least as high as those of the base metal.

Wrought iron can be satisfactorily welded with all types of carbon steel electrodes; however, to minimize a mixture of the slag stringers with the weld metal, it is advisable to limit the penetration into the base metal. Therefore, there is a slight preference for rutile-coated electrodes E6012 and E6013, although E7018 types with their slightly deeper penetration can be used successfully.

Because of the low carbon content, preheating before welding is not usually necessary unless the ambient temperature is below 32°F. In this case, the recommendations given later should be followed and, when carbon steel plates are welded to wrought iron, the preheating requirements of the steel should be followed.

STRUCTURAL STEELS

When steel is welded, the material adjacent to the weld undergoes a severe thermal cycle and, because of this, microstructural changes occur in this region known as the heat-affected zone (HAZ). The extent of these changes in microstructure depends mainly on the composition of the material and the rate of cooling during the thermal cycle.

The rate of cooling in the heat-affected zone will depend on the thickness of the materials being welded and on the heat input used to produce the preheat and interpass temperatures as well as that produced by the welding process and procedure.

Higher rates of cooling similar to those produced by water quenching will create a hardened HAZ. This hardened HAZ may be susceptible to cracking, known as heat-affected zone cracking, cold cracking, or hydrogen cracking. HAZ cracking may be initiated from either the toe or the root of a weld, or it may occur as a buried crack, in which case it is known as an underbead crack.

Under conditions of high restraint hydrogen cracks may occur in the weld metal.

Susceptibility to cracking is increased by the presence of hydrogen in the weld metal which diffuses into the HAZ when the weld cools. Cracking occurs spontaneously after the joint has cooled to a temperature below 300°F and may occur up to several hours after welding has been completed.

The main factors affecting the incidence of HAZ cracking are: (1) the thickness of material and type of joint, both of which affect the degree of restraint; (2) the composition of the steel, which affects its tendency to form a hard HAZ and its susceptibility to cracking; (3) the cooling rate which is a function of the heat input which depends on welding current and travel speed and the preheating temperature; welding vertically-up is generally a high heat input welding procedure for all practical electrode sizes; and (4) the hydrogen content of the weld metal which depends on the type of electrode and its moisture content.

The prevention of HAZ or weld metal hydrogen cracking is accomplished by the use of one or more of the following precautions: (1) use of low hydrogen electrodes dried at high temperatures before welding; (2) preheating of the base metal before welding and maintaining the preheating temperature during welding; and (3) use of high heat input by using large diameter electrodes with high welding currents. (It should be remembered that high heat inputs may reduce the notch toughness of a material.)

Precautions 1 and 2 can be applied in all cases, but precaution 3 can only be used under certain conditions, such as when welding in the flat position. In other welding positions, particularly overhead or vertical, the size of the electrode and the welding current are necessarily limited in order to deposit a sound weld.

Another important factor, and one that cannot be controlled, is that of restraint. High restraint increases the stress on the HAZ and weld, therefore increasing the tendency to cracking.

Service cracking due to fatigue generally occurs in parts of a structure that are highly restrained; therefore, when a subsequent welding repair is carried out, this will be done under conditions of high restraint. Thus, the minimum precautions taken to avoid HAZ cracking during construction may be inadequate for repair welding.

Minimum preheating temperatures for fabrication of steels currently used for bridges are contained in the 1987–1988 interim revisions to the AASHTO *Guide Specifications for Fracture Critical Non-Redundant Steel Bridge Members* (1978). Some of the preheat temperatures specified are probably too low to ensure freedom from HAZ cracking when field welding repairs are carried out, and it is advisable that preheating temperatures of not less than 250°F should be used except when the steels are of the quenched and tempered types.

Guidelines for minimum preheating and interpass temperatures that are based on the AASHTO recommendations for A36, A572, and A588 steels, but with no temperatures lower than 250°F, are given in Table 5.

Other steels are included because they are grouped with the above steels for preheat and interpass temperatures required by ANSI/AWS D.1.–88 Structural Welding Code.

Air carbon arc gouging can form a hardened heat-affected zone that would normally be removed by subsequent grinding to remove any deposit followed by welding. However, to avoid any slight possibility of cracking due to the formation of a hardened heat-affected zone, it is recommended that a local preheat should be applied before air carbon arc gouging.

A preheating temperature of 100°F below the normal preheat specified in Table 5 should be used before gouging.

For bridge repair it is important that the welding electrodes are dried at high temperatures before use, so that the weld metal will have an extra low hydrogen content.

Preheating and interpass temperatures for quenched and tempered steels specified by AASHTO are given in Table 6, and these must be carefully controlled because any increase in heat input caused by higher preheats than specified in Table 6 could affect the mechanical properties of the steel.

The extra low hydrogen content of less than 5 ml/100 g is obtained when low hydrogen electrodes are taken from hermetically sealed containers, dried at 700 to 800°F for 1 hour and used within 2 hours after removal.

In the case of A7 material, which is now obsolete, the chemical

Table 5. Minimum preheat and interpass temperatures, °F.

Thickness of Thickest Part at Point of Welding (inches)	A7*	A36, A242, A373, A441, A500, A501 A572, A618	A558
Upto 3/4	350	250	250
>3/4 - 1½	350	250	250
>1½ - 2½	350	300	300
>2½	350	300	350

* The preheat temperature of 350°F is suitable for maximum carbon content of A7 steels which may be as high as 0.4%. If chemical analysis of the steel shows it to be of lower carbon content the preheating temperature could be reduced,

e.g., 0.30C preheat 300°F
0.25C preheat 250°F

Table 6. Minimum and maximum preheat and interpass temperature (°F) for quenched and tempered steels ASTM A514 and A517.

Thickness of Thickest Part (at point of welding) in	For Heat Input Measured in Kilojoules Per Inch 30	40	50	70	90	110
¼–3/8	50–150					
>3/8–½	150–300	50–200				
>½–3/4	250–400	200–350	100–250			
>3/4–1		250–400	250–400	150–300		
>1–2		250–400	250–400	200–350	200–250	
>2			300–450	300–450	300–450	300–450

composition was not specified and the preheat temperature in Table 5 is based on experience in welding steels having a carbon content of 0.4 percent.

It is advisable, whenever possible, to obtain drillings or a piece of the steel to be repaired for chemical or spectrographic analysis. This applies even when the specification of the steel used is known or when the mill reports have been preserved, because in some cases steel may have been supplied out of specification or incorrect mill reports may have been supplied. Therefore, the cost of analysis of a one-ounce sample of steel, which can be carried out in a few hours, is well worthwhile.

It is important that, whenever possible, the preheating temperature should be maintained for the duration of the repair. In some cases this may be inconvenient, for example, when extensive grinding operations are required before completion of welding or if the method of preheating is by use of oxyfuel gas torches. In many cases, reducing the temperature below that of the preheat for some time will be unimportant. However, in critical cases when a post weld heat treatment is to be applied immediately after welding, any reduction in temperature at any time during the repair could lead to cracking. In such cases the preheat should be maintained for the duration of the repair.

Post Weld Heat Treatment

Steels, such as A7, which may have a carbon content of 0.4 percent or more, produce a hardened HAZ that is susceptible to delayed hydrogen cracking even when the steel is preheated before welding. Therefore, to allow some of the hydrogen to diffuse away from the HAZ, it is advisable to increase the temperature to 400–600°F in the welded joint immediately after

welding and to maintain this temperature for a minimum period of 2 hours. It is recommended that this procedure should be applied to all steels when repairs are carried out on fracture critical members. This post weld heat treatment reduces the hydrogen content and reduces any tendency to hydrogen-induced cracking either of the HAZ or of the weld. Post weld heat treatment should also be applied to partially completed welds, i.e., when welding is interrupted and the weldment is allowed to cool to ambient temperature.

The rate of hydrogen removal increases with temperature and decreases with the depth of a repair weld. The following guidelines should be used for post weld heating temperatures and times for all steels:

Depth of Repair Weld (inches)	Temperature of Post Weld Heat (°F)	Time (Hours)
Up to 1	400 minimum	2
> 1–2	500 minimum	2–4
> 2–3	600	4–6

When the above times have elapsed, the heating source and any insulating material, such as blankets, can be removed to allow the weldment to cool to ambient temperature.

Heat Input Control for Quenched and Tempered Steels

When quenched and tempered steels are repaired by welding, it is possible to reduce the specified tensile and yield strengths, and also the toughness, if the steels are overheated by a combination of high preheat or interpass temperature and high heat input. It is essential that the heat input should be restricted to the maximum recommended by the steel manufacturer. This will entail careful control of welding current, travel speed, preheat and interpass temperature. The permissible minimum and maximum preheat and interpass temperatures for different heat inputs are given in Table 6 for ASTM A514 and A517 steels.

Effect of Heat Input on Toughness

The control of heat transferred to a structure during welding is dictated by the welding procedure, current, voltage and travel speed, and the technique used to deposit the weld metal.

A range of heat inputs can be used, which allow the deposition of sound weld metal at the most economic rate, without adversely affecting the mechanical properties of the joint. For structural steels, a working range of heat inputs of between 1.25 and 2.5 kJ/mm is considered to provide reasonably high deposition rates with acceptable heat-affected zone toughness.

The effect of a heat input higher than 2.5 kJ/mm, used with a weaving technique, is to reduce the heat-affected zone toughness, even though the toughness of the parent and weld metals is satisfactory.

Heat inputs of less than 1.0 kJ/mm will tend to cause excessive hardness, leading to a lack of toughness in both the weld metal and heat-affected zones.

For the flat, horizontal, and overhead positions, a stringer bead technique is the most suitable for controlling heat input, but where weaving is required, such as in the vertical position, a small diameter electrode, $\frac{3}{32}$ in. or $\frac{1}{8}$ in., with a weave width not greater than 2.5 times the electrode diameter should meet the most stringent toughness requirements.

In summary, the toughness of the parent material, weld metal, and heat-affected zone required by most codes should be achieved providing the heat input is kept within acceptable limits, 1.25 to 2.5 kJ/mm, and is used with a suitable technique.

Electrodes for Shielded Metal Arc Welding

For the welded repair of cracks in any of the steels given in Table 3, low hydrogen electrodes should be used and they should conform to the requirements of the latest edition of AWS A5.1 Specification for Covered Carbon Steel Arc Welding Electrodes. Electrodes classified as E7016 or E7018 should be used—these electrodes being suitable for use in all welding positions with direct current electrode positive (DCEP) or on alternating current (AC). The E7018 electrode coverings are similar to those of E7016 electrodes, both being low hydrogen types that produce a basic slag; however, the E7018 type contains a proportion of iron powder, which tends to make the E7018 electrodes easier to use.

Electrodes classified as E7016 or E7018 may be supplied to a minimum Charpy V-notch impact requirement of 20 ft-lb at −50°F, and these electrodes are identified as E7016-1 or E7018-1.

For exposed, bare, unpainted applications of ASTM A242 and A588 steels requiring weld metal with atmospheric corrosion resistance and coloring characteristics similar to those of the base metal, electrodes should be used that conform to E7018-W classification of AWS A5.5-81. Specification for Low Alloy Steel Covered Arc Welding Electrodes (these electrodes deposit weld metal containing 0.30 to 0.60 percent copper).

Low Hydrogen Electrode Storage Conditions

The ANSI/AWS D.1.1–88 Structural Welding Code requires that all low hydrogen electrodes shall be purchased in hermetically sealed containers or shall be dried in the following manner before being used: (1) AWS A5.1 electrodes, e.g., E7016 and E7018—at least 2 hours between 450°F and 500°F; and (2) AWS A5.5 electrodes, e.g., E7018-W—at least 1 hour between 700°F and 800°F.

Electrodes are required by the Structural Welding Code to be dried prior to use if the hermetically sealed container shows evidence of damage.

Immediately after opening the container or after removal of electrodes from drying ovens, the electrodes must be stored in ovens held at a temperature of at least 250°F.

When used for welding ASTM A514 or A517 steels, the Structural Welding Code requires electrodes to be dried for 1 hour between 700°F and 800°F before being used, whether supplied in hermetically sealed containers or otherwise.

The drying temperatures specified above give the following moisture contents in the electrode covering and diffusible hydrogen contents in the deposited weld metal:

Drying Temp. and Time	Percent Moisture Content of Covering	Diffusible Hydrogen Content of Weld Metal—Maximum (ml/100g)
450–500°F for 2 hours	0.4	10
700–800°F for 1 hour	0.2	5

Fabrication experience has proved that the foregoing drying treatments are satisfactory; however, for repair work on bridges, it would be advisable to use the more stringent drying treatment in all cases, so that the hydrogen content of the deposited weld metal is as low as possible. Therefore, the following drying treatment is recommended for all bridge repair work:

1. Remove electrodes from hermetically sealed containers and place in drying oven maintained at 700–800°F for 1 hour. Ensure that electrodes are spaced out so that all electrodes reach the drying temperature. Sufficient shelves should be provided in the oven so that the electrodes are piled in layers so that not more than four electrodes are on top of one another.
2. After high temperature drying, the electrodes should be placed in holding ovens maintained at 250–300°F.

Redrying Electrodes

After electrodes are removed from drying or storage ovens, the maximum permissible exposure time for E70XX electrodes is 4 hours. When more than 4 hours have elapsed, the electrodes should be redried at 700–800°F for 1 hour and they should only be redried once. Electrodes that are wet should be discarded.

ARC BLOW

Causes of Arc Blow

All arc welding processes are susceptible to disruption by magnetic fields that cause the phenomenon known as arc blow. The magnetic field may arise from magnetism possessed by the steel before welding and also from magnetism produced by the welding current during welding. Both effects can be present at the same time. Direct current welding is much more susceptible to arc blow than alternating current, which very rarely gives any trouble.

Possible causes of magnetism in steel are as follows: (1) The steel was solidified in a magnetic field at the steel mill. (2) The steel was lifted with a magnetic hoist. (3) A magnetic clamp was used. (4) Magnetic particle inspection was used. (5) The steel was stored in a magnetic field, e.g., near a DC power source. (6) The steel was left in-situ for sufficient time for magnetism to build up from the earth's magnetic field, e.g., a steel bridge running in a north-south direction. (7) During construction, as a bridge gets progressively longer the steel may become magnetized because of the welding current.

Effects of Arc Blow

The electric current passing through the arc produces its own magnetic field which interacts with the magnetism in the steel.

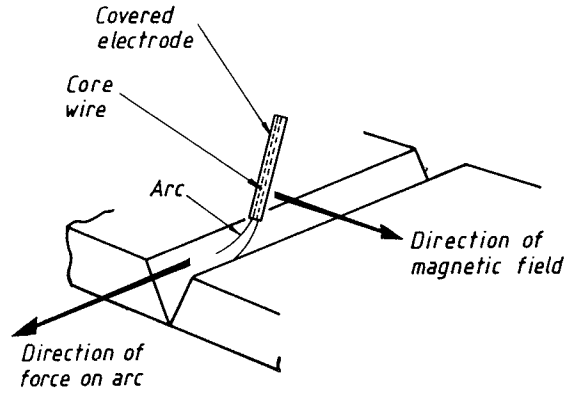

Figure 1. Arc deflection in magnetic field.

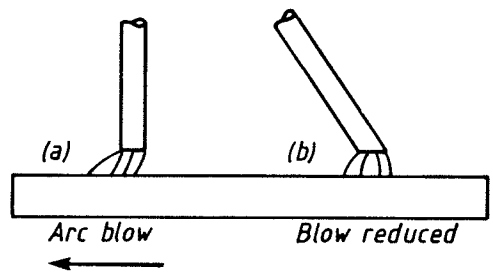

Figure 2. Minor arc blow can be corrected by angling the electrode.

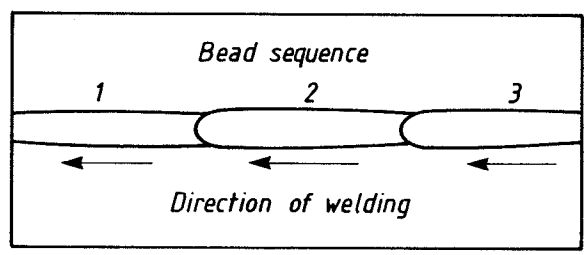

Figure 3. Back-step technique can reduce minor arc blow.

Both of these magnetic fields can vary substantially in different parts of a weldment. Therefore, the arc can be deflected and can also behave erratically.

Forces acting on the arc because of magnetism (Figure 1) can be strong enough to extinguish the arc momentarily, thus causing defects such as slag inclusions, lack of sidewall fusion, and porosity. Welds containing these defects must be cut out and rewelded, leading to increased welding time and cost.

Combating Arc Blow

Welding Technique. Sometimes minor arc blow can be corrected by angling the electrode (Figure 2) or by use of a back step welding sequence (Figure 3).

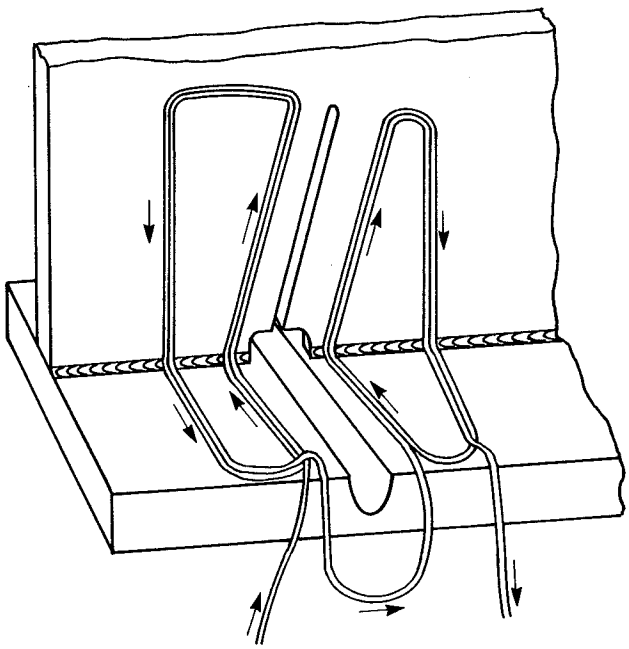

Figure 4. Demagnetizing cable used to reduce arc blow in welded repair groove in flange and web of girder.

Another common method of combating arc blow is to reposition the workpiece lead or to use two workpiece leads connected between the arc welding current source and different positions on the workpiece.

Residual Magnetism and Degaussing. Removal of residual magnetism can be carried out by the use of an AC field. The largest available AC power source should be used, which usually restricts this method of degaussing to the workshop. However, details of the procedure are provided for use on any replacement girders that are heavily magnetized. The procedure is as follows:

1. Wrap two turns of welding cable around the workpiece, applying maximum power from, say, a 500 A power source for 30 sec and then reduce the current to zero.
2. Wrap four turns (twice the previous number) of the cable around the component and apply half the previous current, i.e., 250 A for 30 sec and then reduce the current to zero.
3. Repeat with 8 turns of cable and 125 A.

With a power mains frequency of 60 Hz, it is possible that elimination of the residual magnetism will only be a surface effect; but, in many cases, this is sufficient to reduce arc blow to such an extent as to avoid defects during subsequent welding. This method is generally unsuitable for repair work because of the difficulty or impossibility of wrapping cables around girders because of obstruction.

Furthermore, when the current source is removed, residual magnetism in the remainder of the bridge will remagnetize the part that was demagnetized.

Local Opposing Magnetic Fields. The magnetic field in a weld groove can be completely removed by the application of an equal and opposite field by the passage of an electric current through appropriately positioned cables.

Commercial equipment is available for this purpose, which incorporates a hand-held field probe that is inserted into the welding groove, or into the corner in the case of fillet welds. The probe automatically feeds all the magnetic information about the joint into a portable power unit. The power unit produces a demagnetizing field by passing a suitable DC current through cables positioned each side of the welding groove.

An effective opposing magnetic field can be provided by two to three turns of cable each side of the groove (Figure 4) and direct currents in the range 50 A to 200 A, and the following procedure can be carried out with readily available equipment.

1. Place a magnetic probe in the bottom of the weld groove or the corner of a joint for a fillet weld and monitor the field level. Alternatively place a small pocket compass close to the gap. The red or north end of the needle will point in the positive field direction.
2. Support 2 to 4 turns of welding cable each side of the joint (Figure 4), 4 to 8 in. from the groove.
3. Set the polarity from a DC power source so that when the current is increased the field strength in the groove or corner of the joint is reduced or the compass needle changes its direction.
4. Adjust the current until the magnetic field strength at the point where welding is to commence is minimized. Check by a field probe or by a paper clip, or a piece of wire suspended by a length of string. When there is no magnetic pull on the suspended metal, arc blow should not occur.

Sometimes the opposing field can be dispensed with, once welding is partially completed, because the residual field is shunted through the weld metal and no longer causes disruption of the arc.

CHAPTER FOUR

REPAIR OF CRACKS

GENERAL PRINCIPLES

There are many different methods and procedures for the repair of cracks. For example, a crack in a horizontal flange is preferably gouged out so that most of the repair weld can be deposited in the flat position with high deposition rate and minimum time for completion. On the other hand, if access to the upper surface of the flange is restricted by the presence of stiffeners or intersecting girders, it may be more convenient to carry out most of the gouging and welding from underneath the flange.

When branching cracks or two or more closely spaced cracks are present, it may be advantageous to gouge out and repair each crack or it may be quicker to cut out a section containing the cracks and weld in an insert plate.

CRACK REMOVAL

Small cracks up to 1 in. long and 3/32 in. deep are most conveniently removed by mechanical means, such as a grinding wheel or a high speed rotary tungsten carbide burr. However, these methods also can be applied to cracks up to 1/2 in. deep and 12 in. long. Therefore, if a crack penetrates a 1-in. thick plate, it could be removed by mechanical gouging to half the plate thickness from each side of the plate.

When cracks are longer than 1 ft in plate and more than 1/2 in. thick, removal by mechanical means is laborious and time consuming, and these cracks can be removed by air carbon arc gouging. If cracks run into or approach close to corners, such as the junctions between stiffeners and webs or webs and flanges, it is not possible to use arc gouging methods right to the end of the cracks because the corner forms a barrier that reflects the molten metal ejected from the groove and prevents the formation of a clean cut. In such cases, the ends of the cracks must be removed by mechanical methods. Gouging electrodes are shielded metal arc electrodes designed for cutting grooves in metal, the molten metal being removed from the cut by gravity. These electrodes are most useful for the removal of fillet welds, particularly when used vertically downwards on vertical surfaces or in the overhead position. They have been replaced to a large extent by the more efficient and faster air carbon arc process. The use of thermal methods of crack removal has been known to cause propagation of a crack, and to prevent this the gouging should be started slightly beyond the end of a crack with the torch directed towards the crack.

Alternatively, crack propagation can be prevented by drilling holes at the ends of cracks, and a guide to diameters of holes is as follows:

Plate Thickness (inches)	Hole Diameter (inches)
up to 3/8	5/8
> 3/8–3/4	3/4
> 3/4	1 1/4

The center of the hole should be positioned beyond the visible extremity of the crack so that the edge of the hole coincides with the visible end of the crack. If the crack is visible on both sides of the plate, the position of the hole center should be measured from the end of the crack that has propagated farthest.

Fatigue cracks are generally orientated at approximately 90 deg to the plate surface, so that drilling a hole with its axis perpendicular to the surface should contain the crack.

High Strength Bolts

Drilled holes can prevent crack propagation as a short term measure, but a more reliable method that can provide longer term protection is the use of high strength bolts (Figure 5).

The bolts are tightened sufficiently to cause compressive stresses in the metal surrounding the hole, and this can prevent or delay the propagation of a fatigue crack.

High strength bolts should be used such as AASHTO designation M164-86 (ASTM A325-84), and the diameter of the bolt should be approximately 1/16 in. less than the hole diameter. Two hardened washers should be used, one each side of the plate, and bolts and nuts should preferably be tightened by the part-turn method. This will give a shank tension in the bolt of approximately 0.70 times the maximum specified tensile strength of the bolt. An alternative method of bolt tightening is by torque control.

Method of Tightening

If the part-turn method of tightening is used to provide the bolt tension required, the bolt is first brought to a "snug tight" condition. (Snug tight is defined as the tightness attained by a few impacts of an impact wrench or the full effort of a man using an ordinary spud wrench.) The bolt is then tightened additionally by rotation of the nut by a one-third of a turn.

Tightening by torque control, i.e., by the use of a load indicating fastener system is satisfactory, provided that it can be demonstrated that the tension in the bolt is equal to 70 percent of the specified minimum tensile strength of the bolt.

The wrench used for tightening should be maintained in proper working order and should be calibrated as recommended by the wrench manufacturer.

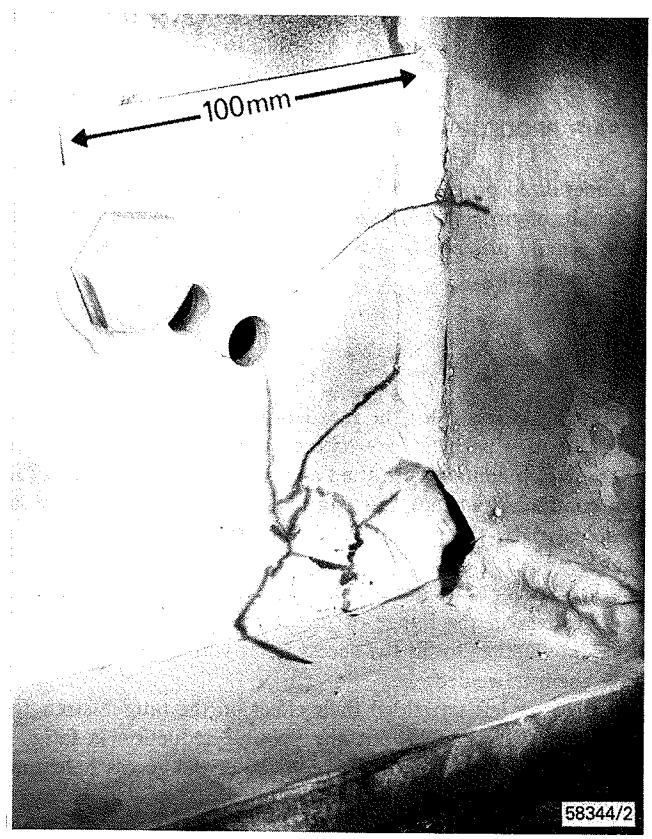

Figure 5. Use of high strength bolt to arrest fatigue crack. The stresses were too high for the crack to be arrested by the first two holes that were not bolted.

Welding position	Groove angle α°	Bevel angles α°_1	α°_2
Flat	20 min.	–	–
Vertical	20 min.	–	–
Overhead	20 min.	–	–
Horizontal	40 min.	30-45	0-15

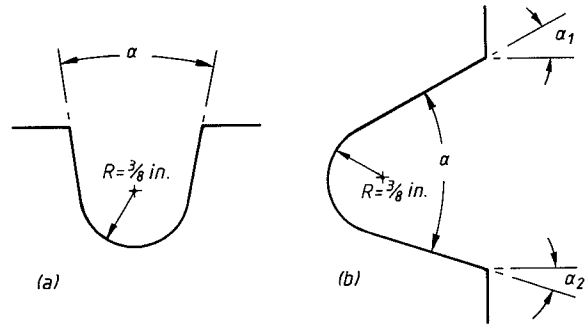

Figure 6. Dimensions of grooves for repair welds. These are intended as guidelines and may vary in practice.

Groove Types

The groove types for welding repairs in various positions are shown in Figure 6. These groove shapes and dimensions are idealized, and it will not always be possible to obtain them precisely in practice. The objective of the groove profiles is to enable the welder to obtain sufficient room to manipulate the electrode and produce sound welds without defects, such as slag inclusions or lack of fusion. As a useful guide the shape of the groove corresponds approximately to the tip of the welder's thumb.

REPAIR PROCEDURES

Generalized procedures for repair of typical cracks in flanges and webs of girders are given in this section. The adaptation of these general principles of repair to more extensive cracking is also described.

Access Holes

To provide access for the repair of a crack in the flange of a girder, it may be necessary to cut an access hole in the web where it is in contact with the flange. Similarly, the repair of a web containing a crack that runs into or close to a flange is made easier by the presence of an access hole adjacent to the flange.

When access holes are cut in a web to facilitate the welding of V-grooves in the flange or in the web, a decision must be made on whether to fill the access holes with weld metal or to leave them unwelded.

If they are left unwelded their effect on the fatigue strength of a girder is unknown, but any possible reduction in fatigue strength will be minimized if the shape of the access hole and the surface finish are carefully controlled.

An elongated hole will produce a lower stress concentration and, therefore, higher fatigue strength than a circular hole, and the surface and the corners of the hole should be ground smooth.

If the access holes are to be filled by welding, great care must be taken to ensure that the welds are free from defects that could lower the fatigue strength. To facilitate the welding of access holes it is essential to prepare the edges of the holes with the bevels described below.

Access holes in a web may be required adjacent to either the top or bottom flanges and, to facilitate their repair, the holes should be cut with the bevel angles shown in Figure 7. A backing should be used and welding carried out from one side. After filling the access hole with weld metal, the backing is gouged or ground away and the weld surfaces are ground flush with the surfaces of the web. Preheating should be used as required and in accordance with Tables 5 and 6.

An example of the procedure for making and repairing access holes follows:

1. Preheat plate locally to a temperature 100°F below the preheat temperature to be used.
2. Remove fillet welds on both sides of web for lengths of 2 in. to 3 in. by air carbon arc gouging (Figure 8).
3. Cut access hole in web by air carbon arc gouging and provide bevel on edges of hole if it is to be filled by welding after repair of crack has been carried out. Suitable bevel angles are shown in Figure 7.

For the repair of a crack that is confined to the web a small hole having a minimum height of approximately ½ in. is suitable (Figure 9). For repair of a crack in the flange, which will require a groove to be made in the flange, the access hole will have to be made larger, as shown in Figure 10. The minimum height of the hole will be approximately ¾ in. and the length of the hole must be sufficient to enable a groove to be cut in the flange.

To facilitate gouging of access holes in webs having thicknesses of ¾ in. or more, it is useful to start by cutting a slot with oxyfuel gas (Figure 11). Once the section thickness is penetrated air carbon arc gouging is easier.

4. When repair of cracks in the web or flange has been completed, a backing should be tack welded to the web (Figure 12).
5. With the required preheat maintained, fill the access hole with weld metal by depositing stringer beads (Figure 13). Check each pass visually for freedom from cracks or other defects. When the access hole is filled, deposit fillet welds between web and flange.
6. Increase temperature of joint regions for post-heating if required.
7. Grind repair welds flush with plate surface.
8. Inspect by magnetic particle or dye penetrant examination to check freedom from surface breaking defects.
9. Carry out final inspection by ultrasonic testing or radiographic testing.

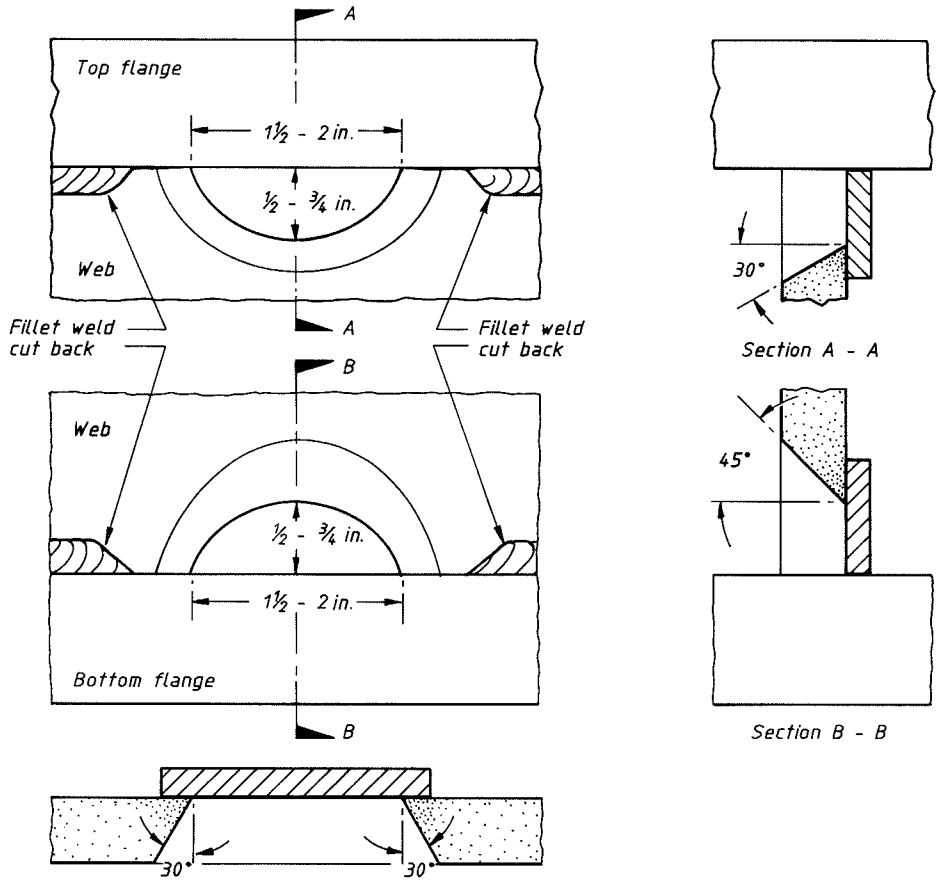

Figure 7. Access holes in web with typical dimensions and bevel angles. If access holes are to be left unfilled, bevels are not required.

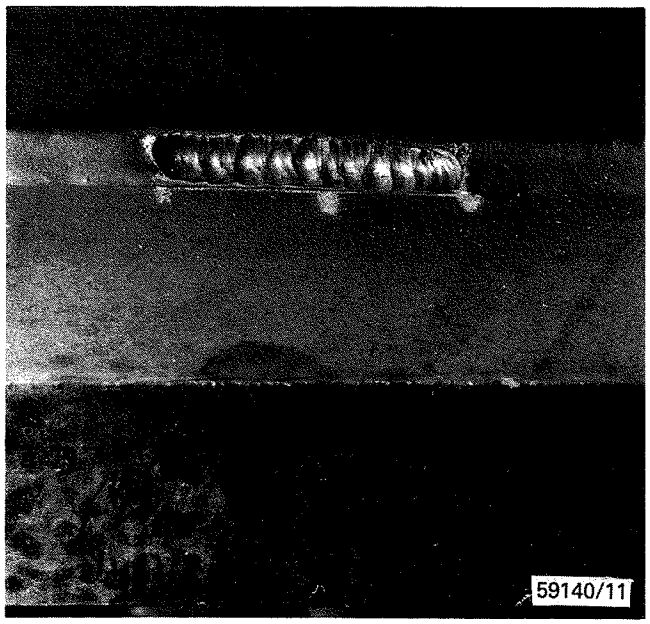

Figure 8. Part of fillet weld between web and flange of girder removed by air carbon arc gouging.

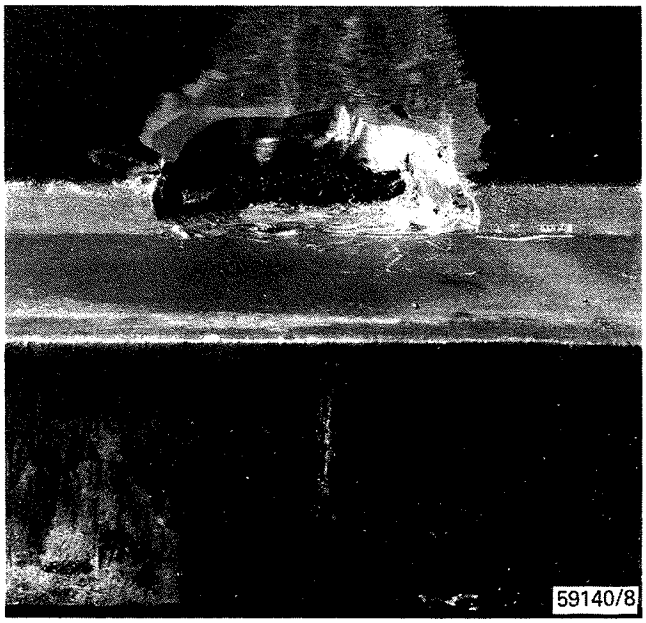

Figure 9. Small access hole suitable for repair of crack in web. Minimum height of hole ½ in.

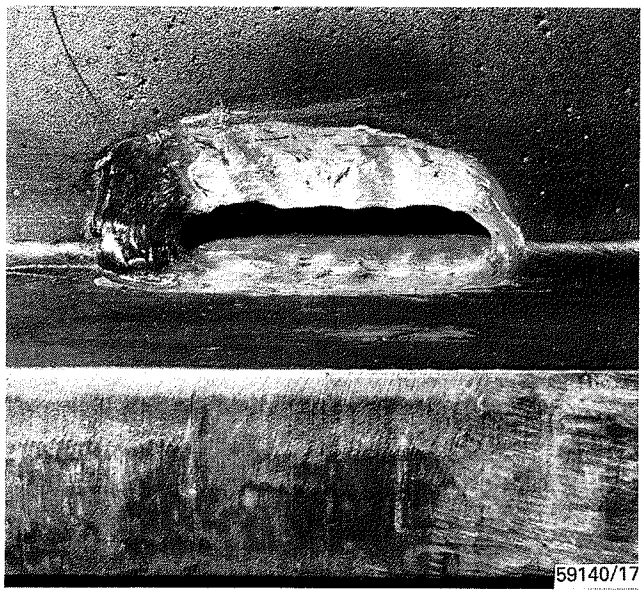

Figure 10. Access hole for repair of crack in flange. Minimum height of hole ¾ in.

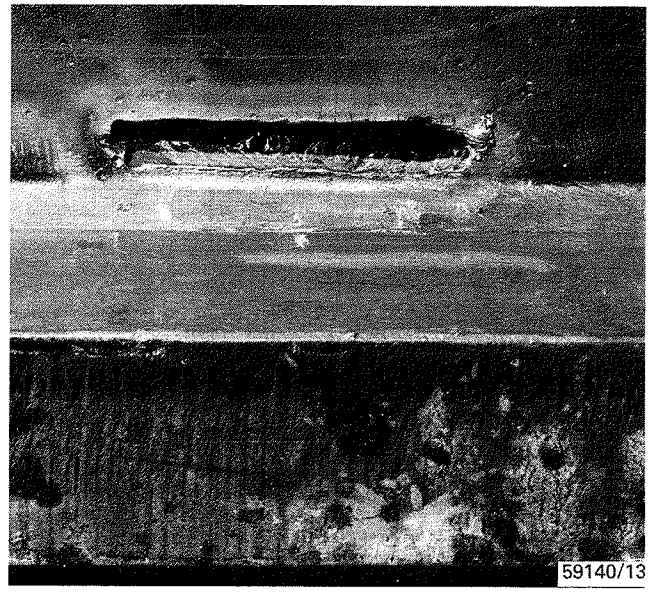

Figure 11. Slot cut by oxyfuel gas to facilitate subsequent air carbon arc gouging.

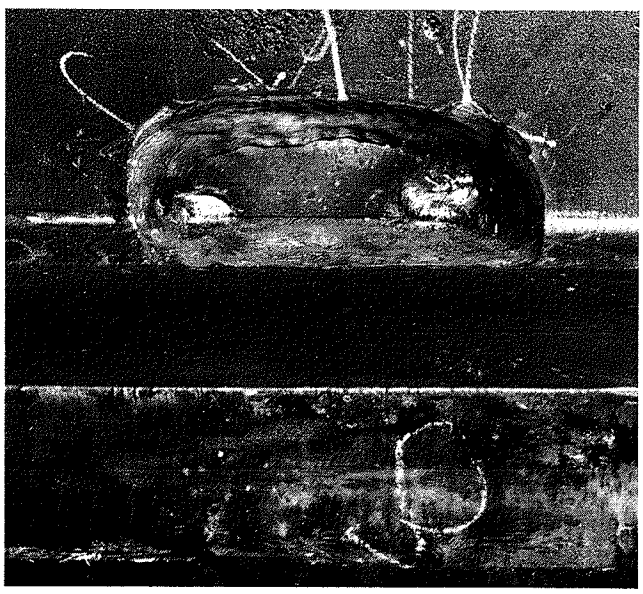

Figure 12. Backing tack welded to web at back of access hole.

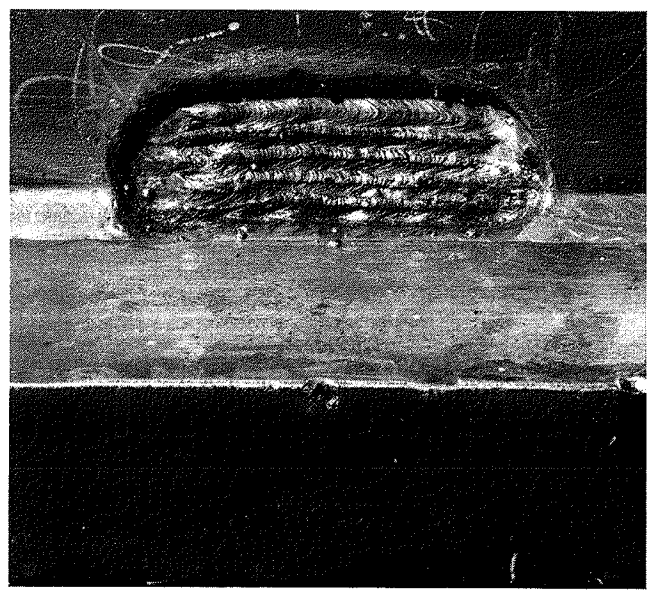

Figure 13. Access hole partially filled with weld metal.

Cracks in Flanges

Cracks Associated with Cover-Plate Details

Partial depth crack in lower surface of bottom flange (Figure 14).

1. Check length of crack by magnetic particle or dye penetrant testing.

2. Remove part of the fillet weld adjacent to the crack and cut out the crack to form a groove by air carbon arc gouging or by mechanical means, such as grinding or high speed rotary burr, as appropriate (Figure 15a). Before using the air carbon arc process, the base metal should be preheated locally to a temperature 100°F below that to be used for welding. After air carbon arc gouging, grind the surface smooth to remove any deposit.

3. Check the groove by magnetic particle testing to ensure complete removal of crack.

4. Preheat plate to the required temperature in accordance with Table 5 or Table 6 and maintain this temperature for the duration of the repair.

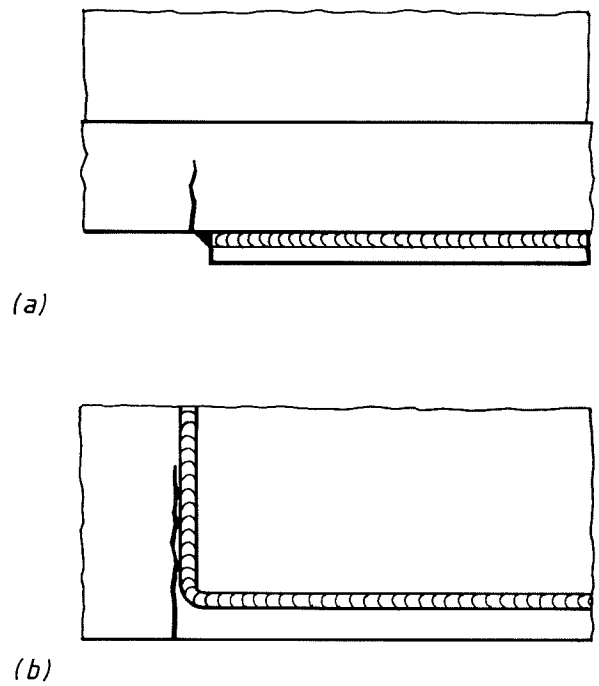

Figure 14. Partial depth crack in flange initiated from toe of fillet weld at end of cover plate: (a) side view, and (b) overhead view.

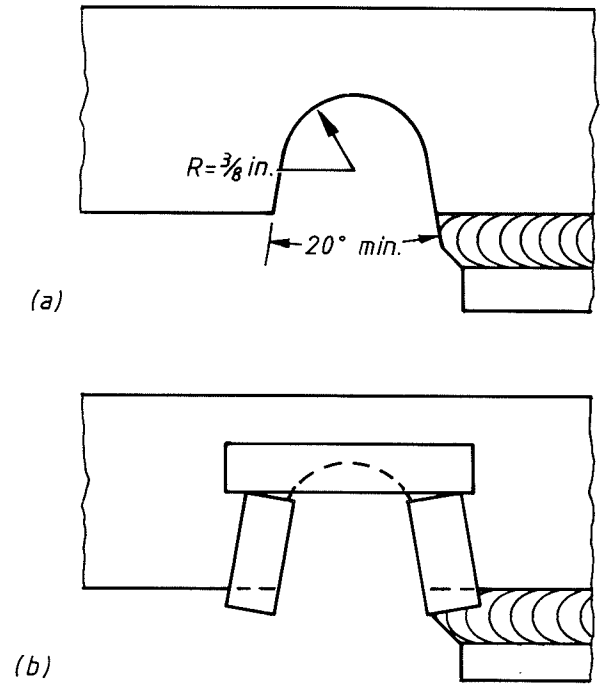

Figure 15. Groove for repair of partial depth crack in overhead position: (a) groove shape, and (b) run-off tabs tacked in place.

5. Tack weld run-off tabs in position (Figure 15b). The run-off tabs consist of three mild steel strips approximately ¼ in. thick, 2 in. long and wide enough to reach the surface of the flange.

6. Grind run-off tabs where they are in contact with the flange so that they match the profile of the groove.

7. Weld groove with low hydrogen electrodes dried at 700°F to 800°F for 1 hour to give welds that have extra low hydrogen content. Check each pass visually for freedom from cracks or other defects. Replace part of fillet weld removed.

8. Increase temperature of joint region for post-heating if required.

9. Remove run-off tabs and grind weld flush with plate surface.

10. Dress toe of fillet weld.

11. Inspect by magnetic particle or dye penetrant methods including areas from which tack welds have been removed.

12. Carry out final inspection by ultrasonic or radiographic testing.

Full depth crack through bottom flange of girder extending over whole width of flange. Depending upon the ease of access and convenience, a full depth crack may be repaired mainly in the flat position with a backing by means of a plate or a backing weld, or in the overhead position with only a minor amount of welding on the top side of the flange.

Welding in flat position with plate for backing (Figure 16).

1. Remove fillet welds between web and flange for a length of approximately 3 in. by mechanical means or by air carbon arc gouging. Before air carbon arc gouging, the base metal should be preheated locally to a temperature 100°F below that to be used for welding.

2. Cut out access hole approximately 2 in. long and 1 in. high by combination of air carbon arc gouging and rotary burr.

3. Remove crack by oxyfuel gas cutting or air carbon arc gouging a groove (Figure 16a). The groove angle should be a minimum of 20 deg.

4. Grind surface of groove to remove any deposit.

5. Preheat plate to the required temperature and maintain this as a minimum temperature for the duration of the repair.

6. Tack weld backing and run-off tabs in position (Figure 16b).

7. Weld groove. Check each pass visually for freedom from cracks or other defects.

8. Fill in the access hole with weld metal using stringer beads.

9. Remove backing by air carbon arc gouging or by grinding.

10. Replace weld metal removed from fillet weld at end of cover plate and replace fillet welds between web and flange.

11. Increase temperature of joint region for post-heating if required.

12. Remove run-off tabs and grind weld metal flush with surface of flange on top and at each side, and grind the surface of the weld metal in the access hole flush with the surface of the web plate.

13. Dress toe of fillet weld at the end of the cover plate.

14. Inspect by magnetic particle or dye penetrant method including areas from which tack welds have been removed.

15. Carry out final inspection by ultrasonic or radiographic testing.

Welding mainly in flat position with weld backing (Figure 17).

1. Remove fillet welds between web and flange for a length

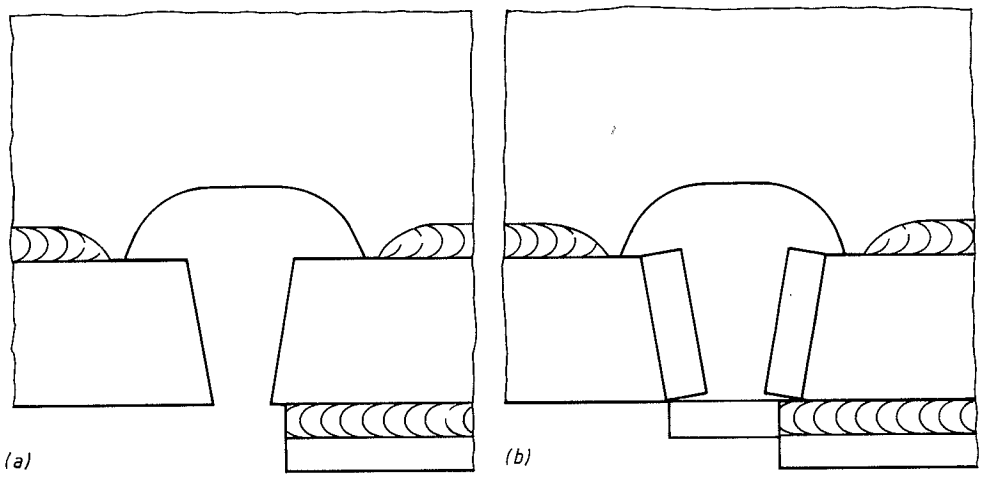

Figure 16. Full-depth crack through flange at end of cover plate. Repair procedure with temporary backing: (a) Access hole in web and groove in flange. Fillet welds are cut back from web to enable access hole to be cut. If access hole is to be filled with weld metal, it should be bevelled. Groove angle 20 deg, minimum root opening ⅜ in. Cover plate and associated fillet weld are cut back to allow access for backing. (b) Temporary back and run-off tabs in place.

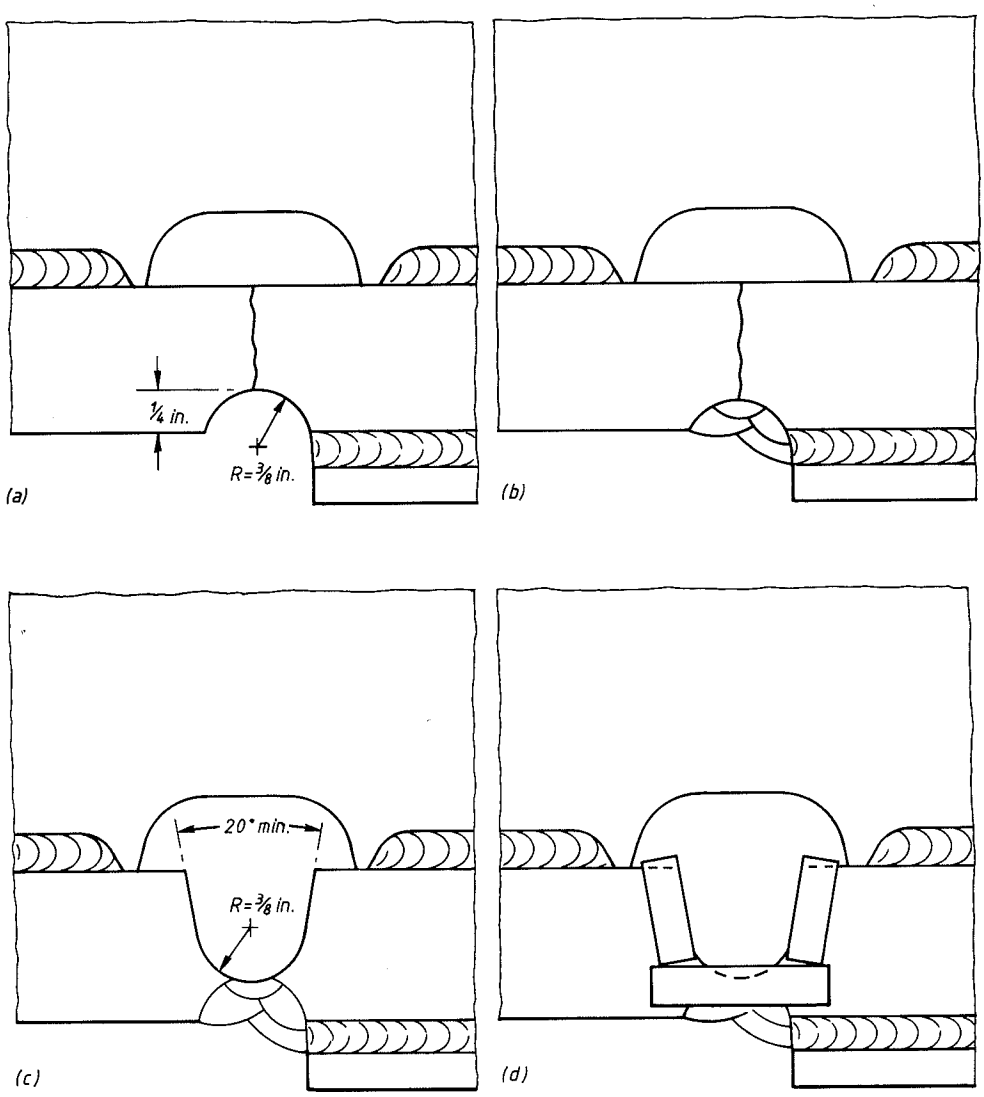

Figure 17. Repair of crack with use of backing weld: (a) Groove cut on underside of flange after removal of part of cover plate and fillet weld. Access hole cut in web after removal of part of fillet weld from web. If access hole is to be filled with weld, the edges should be bevelled. (b) Backing weld deposited in groove and fillet weld replaced. (c) Groove cut on top of flange. (d) Run-off tabs tacked in place.

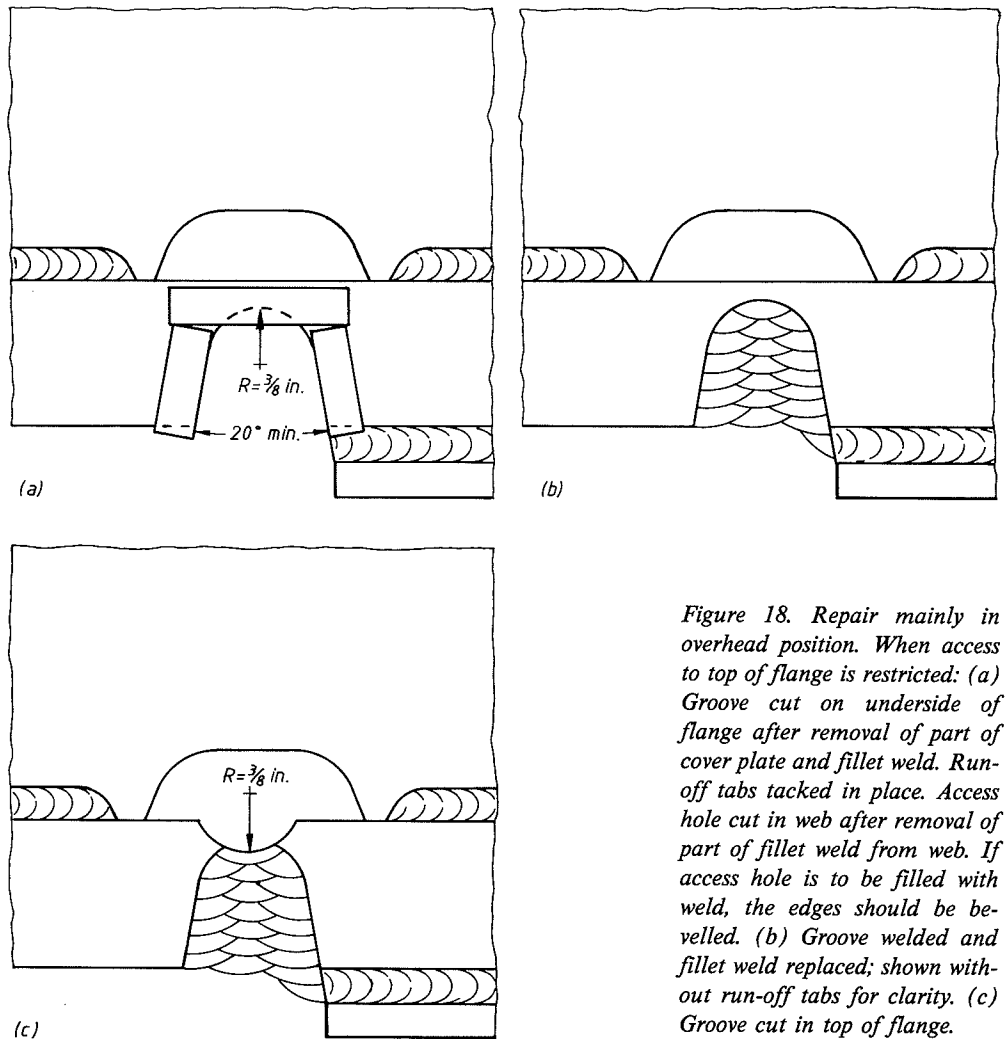

Figure 18. Repair mainly in overhead position. When access to top of flange is restricted: (a) Groove cut on underside of flange after removal of part of cover plate and fillet weld. Run-off tabs tacked in place. Access hole cut in web after removal of part of fillet weld from web. If access hole is to be filled with weld, the edges should be bevelled. (b) Groove welded and fillet weld replaced; shown without run-off tabs for clarity. (c) Groove cut in top of flange.

of approximately 3 in. by mechanical means or by air carbon arc gouging. Before air carbon arc gouging, the base metal should be preheated locally to a temperature 100°F below that to be used for welding.

2. Cut out access hole in web approximately 2 in. long and 1 in. high by combination of air carbon arc gouging and rotary burr.

3. Cut groove approximately ¼ in. deep with ⅜ in. radius along line of crack on underside of flange (Figure 17a). This will require removal of part of fillet weld between the cover plate and flange.

4. Grind surface of groove to remove any deposit.

5. Preheat plate to the required temperature. In critical applications, e.g., when post weld heating is to be carried out, the preheat temperature should be maintained for the duration of the repair.

6. Deposit weld passes to fill groove and replace weld metal removed from fillet weld (Figure 17b). At both ends of the groove each weld pass should be continued around the bottom corners of the flange and this excess weld metal should be ground flush with the edges of the flange so that no craters or notches are present.

7. Remove crack from upper surface of flange by air carbon arc gouging a groove (Figure 17c). The groove angle should be a minimum of 20 deg and the groove radius should be approximately ⅜ in.

8. Grind surface of groove to remove any deposit.

9. Preheat plate to the required temperature.

10. Tack weld run-off tabs in position (Figure 17d).

11. Weld groove. Check each pass visually for freedom from cracks or other defects.

12. Fill in the access hole with weld metal using stringer beads.

13. Replace fillet welds between web and flange.

14. Increase temperature of joint region for post-heating if required.

15. Remove run-off tabs and grind weld metal flush with upper and lower surfaces of flange and at each side around flange corners in repaired area, and grind the surface of the weld metal in the access hole flush with the surface of the web plate. The finished flange should have rounded corners.

16. Dress toe of fillet weld at the end of the cover plate.

17. Inspect by magnetic particle or dye penetrant method, including areas from which tack welds have been removed.

18. Carry out final inspection by ultrasonic or radiographic testing.

Welding mainly in overhead position (Figure 18). If access to the top of the flange is restricted, it may be necessary to carry out most of the repair by welding from underneath the flange in the overhead position. Because of the large size of the groove

its width may require removal of part of the cover plate as well as the fillet weld at the end of the cover plate.

1. Remove crack by air carbon arc gouging a groove in the bottom surface of the flange. The bottom of this groove should be ⅛ in. to ¼ in. from the top surface of the flange so that the minimum amount of welding will be required in the flat position (Figure 18a). Before air carbon arc gouging, the base metal should be preheated to a temperature 100°F below that to be used for welding.
2. Grind surface of groove to remove any deposit.
3. Preheat plate to the required temperature. In critical applications, e.g., when post-weld heat is to be carried out, the preheat temperature should be maintained for the duration of the repair.
4. Tack weld run-off tabs in position.
5. Weld groove. Check each pass visually for freedom from cracks and other defects.
6. Remove run-off tabs.
7. Replace fillet weld at the end of the cover plate (Figure 18b).
8. Cut out access hole in web approximately 2 in. long and 1 in. high by combination of air carbon arc gouging and rotary burr.
9. Remove crack from top surface of flange by cutting a groove into sound metal of the overhead weld (Figure 18c).
10. Weld groove. Check each pass visually for freedom from cracks or other defects.
11. Fill in the access hole with weld metal using stringer beads.
12. Replace fillet welds between web and flange.
13. Increase temperature of joint region for post-heating if required.
14. Grind weld metal flush with surface of flange on top and bottom and on each side around flange corners in repaired area and grind the surface of the weld metal in the access hole flush with the surface of the web plate. The finished flange should have rounded corners.
15. Dress toe of fillet weld at the end of the cover plate.
16. Inspect by magnetic particle or dye penetrant method, including areas from which tack welds have been removed.
17. Carry out final inspection by ultrasonic or radiographic testing.

Cracks in Groove Welds

Full depth crack in flange at edge of groove weld. The procedure for repair welding is similar to that used for cracks initiating from the ends of cover plates illustrated in Figures 15a to 18b, but is somewhat simpler because of the absence of a cover plate. The alternative procedures are as follows.

Welding in flat position with plate for backing (Figure 19).

1. Cut out access hole in web either to the shape shown in Figure 20 or similar to that shown in Figure 21, e.g., approximately 2 in. long and 1 in. high by combination of air carbon arc gouging and rotary burr. Before air carbon arc gouging, the base metal should be preheated to a temperature 100°F below that to be used for welding.
2. Remove crack by air carbon arc gouging a groove.
3. Grind surface of groove to remove any deposit and grind any remaining weld reinforcement flush with top and bottom surfaces of flange.
4. Preheat plate to the required temperature and maintain this as a minimum temperature for the duration of the repair.
5. Tack weld temporary backing and run-off tabs in position. For flanges up to 1 in. thick only a backing is required (Figures 19 and 20). For thicker flanges a backing and run-off tabs should be used (Figure 21).
6. Weld groove. Check each pass visually for freedom from cracks or other defects.
7. Fill in the access hole with weld metal using stringer beads and replace fillet weld (Figure 22).
8. Increase temperature of joint region for post-heating if required.
9. Remove run-off tabs and backing and grind weld metal flush with surface of flange on top and at each side around flange corners in repaired area, and grind the surface of the weld metal in the access hole flush with the surface of the web plate. The finished flange should have rounded corners.
10. Inspect by magnetic or dye penetrant method, including areas from which tack welds have been removed.
11. Carry out final inspection by ultrasonic or radiographic testing.

Welding mainly in flat position with weld backing.

1. Cut access hole in web approximately 2 in. long and 1 in. high by combination of air carbon arc gouging and rotary burr. Before air carbon arc gouging, the base metal should be preheated locally to a temperature 100°F below that to be used for welding.
2. Cut groove approximately ¼ in. deep with ⅜ in. radius along line of crack on underside of flange (Figure 23a).
3. Preheat plate to the required temperature. In critical applications, e.g., when post weld heating is to be carried out, the preheat temperature should be maintained for the duration of the repair.
4. Deposit 3 or 4 weld passes to fill groove (Figure 23b). At both ends of the groove, each weld pass should be continued around the bottom corner of the flange and this excess weld metal should be ground flush with the edges of the flange so that no craters or notches are present.
5. Remove crack from upper surface of flange by air carbon arc gouging a groove (Figure 23c).
6. Grind surface of groove to remove any deposit.
7. Preheat plate to the required temperature.
8. Tack weld run-off tabs in position.
9. Weld groove. Check each pass visually for freedom from cracks or other defects.
10. Fill in the access hole with weld metal using stringer beads.
11. Replace fillet welds between web and flange.
12. Increase temperature of joint region for post-heating if required.
13. Remove run-off tabs and grind weld metal flush with upper and lower surface of flange and at each side around flange corners in repaired area, and grind the surface of the weld metal in the access hole flush with the surface of the web plate. The finished flange should have rounded corners.
14. Inspect by magnetic or dye penetrant method, including areas from which tack welds have been removed.
15. Carry out final inspection by ultrasonic or radiographic testing.

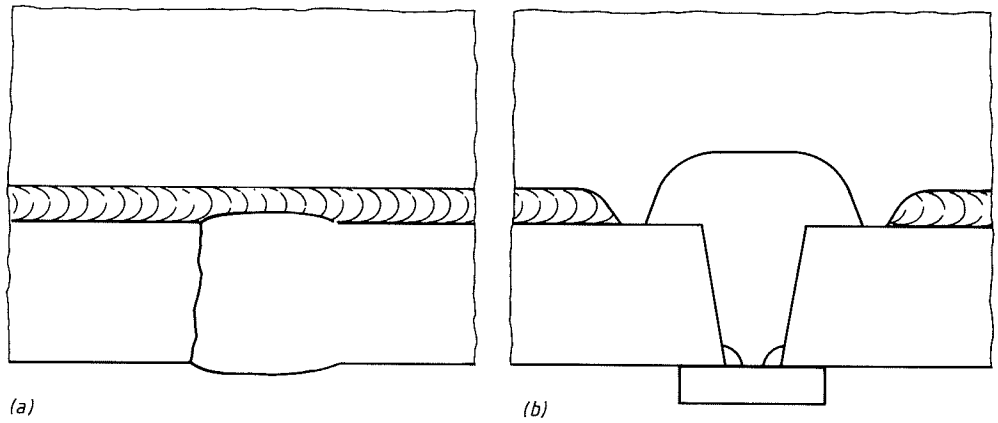

Figure 19. Full depth crack in flange at edge of groove weld: (a) Location of crack. (b) Fillet weld cut back and access hole cut in web. Groove cut in flange with groove angle of 20 deg minimum and root opening ⅜ in. Backing tacked in place. For plate above 1 in. thick, run-off tabs are required as well as the backing. Tack welds are preferably located inside the groove.

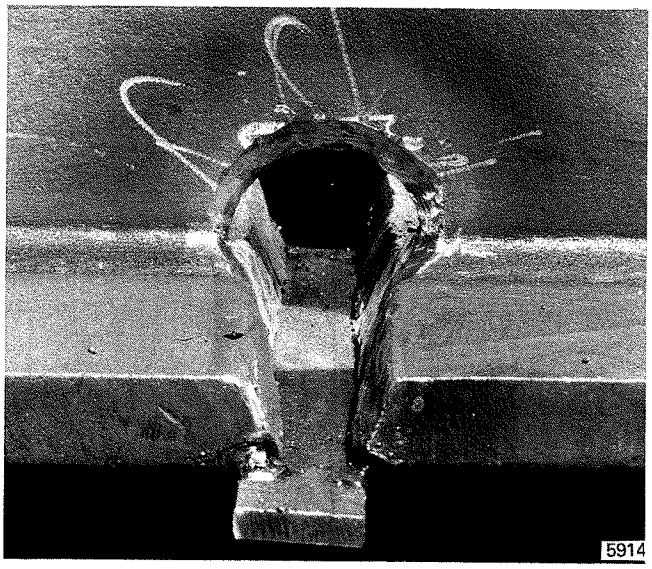

Figure 20. Groove in flange with backing. Flange thickness ¾ in.

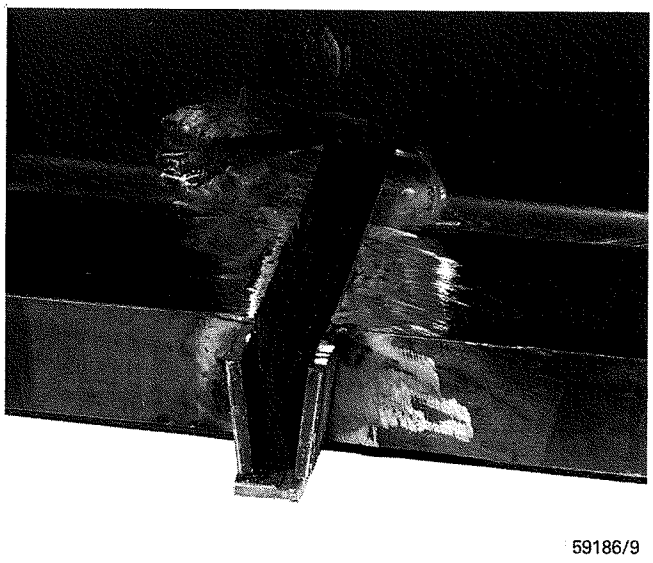

Figure 21. Groove in flange with backing and run-off tabs. Flange thickness 2 in.

Repair mainly in overhead position. If access to the top of the flange is restricted, it may be necessary to carry out repair by welding from underneath the flange in the overhead position with only 3 or 4 passes of weld made on top of the flange. The procedure is similar to that described previously for overhead repair.

Cracks in Webs

A crack in a web member will nearly always penetrate the full section thickness and may vary in orientation from vertical to horizontal.Groove dimensions for repair welds should approximate those shown in Figure 6. For cracks orientated vertically and up to 45 deg from vertical, the groove should be as shown in Figure 6a; and for crack orientation between the horizontal and up to 45 deg from horizontal, the groove dimensions in Figure 6b should be used.

Repair of full depth crack.

1. Cut out crack from one side by air carbon arc gouging or by rotary burr to approximately half plate thickness and form a groove with a minimum groove radius of ⅜ in. and a minimum groove angle of 20 deg (Figure 24). Before air carbon arc gouging, the base metal should be preheated locally to a temperature 100°F below that to be used for welding.
2. Check that the sides of the groove are free from defects by magnetic particle inspection.
3. Preheat web to specified temperature and maintain this as a minimum temperature for the duration of the repair.
4. Fill the groove by welding. Check each pass visually for freedom from cracks or other defects.

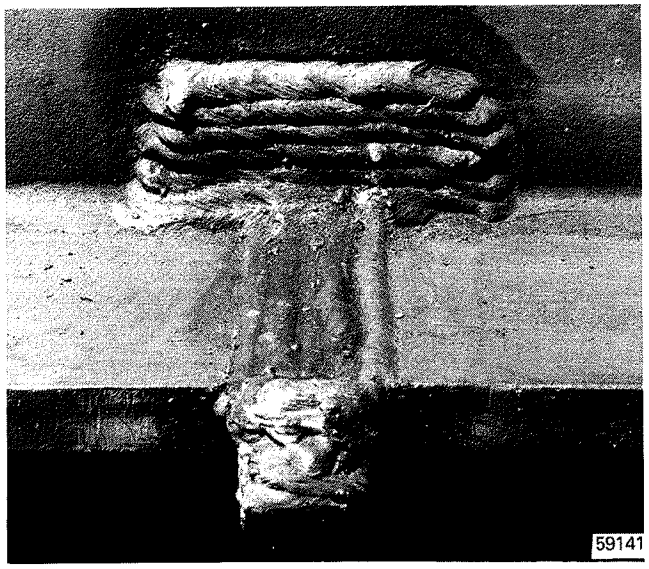

Figure 22. Groove weld with backing. Access hole filled with weld metal.

5. Cut out remainder of crack from the other side of the web.
6. Check for complete removal of crack by magnetic particle inspection.
7. Weld groove. Check each pass visually for freedom from cracks or other defects.
8. Increase temperature of joint region for post-heating if required.
9. Grind welds flush with plate surface on both sides of web.
10. Inspect by magnetic particle or dye penetrant methods.
11. Carry out final inspection by ultrasonic or radiographic testing.

Wide Cracks In Flanges or In Webs

The generalized repair procedures described previously in this chapter apply to cracks the surfaces of which may be separated by gaps of up to about $^3/_{16}$ in. In some cases, cracks either in flanges or in webs may separate to form wider gaps which may be up to 2 in. This can occur when a bottom girder flange is completely penetrated by a crack which then propagates through a large proportion of the web. As well as separating to form a

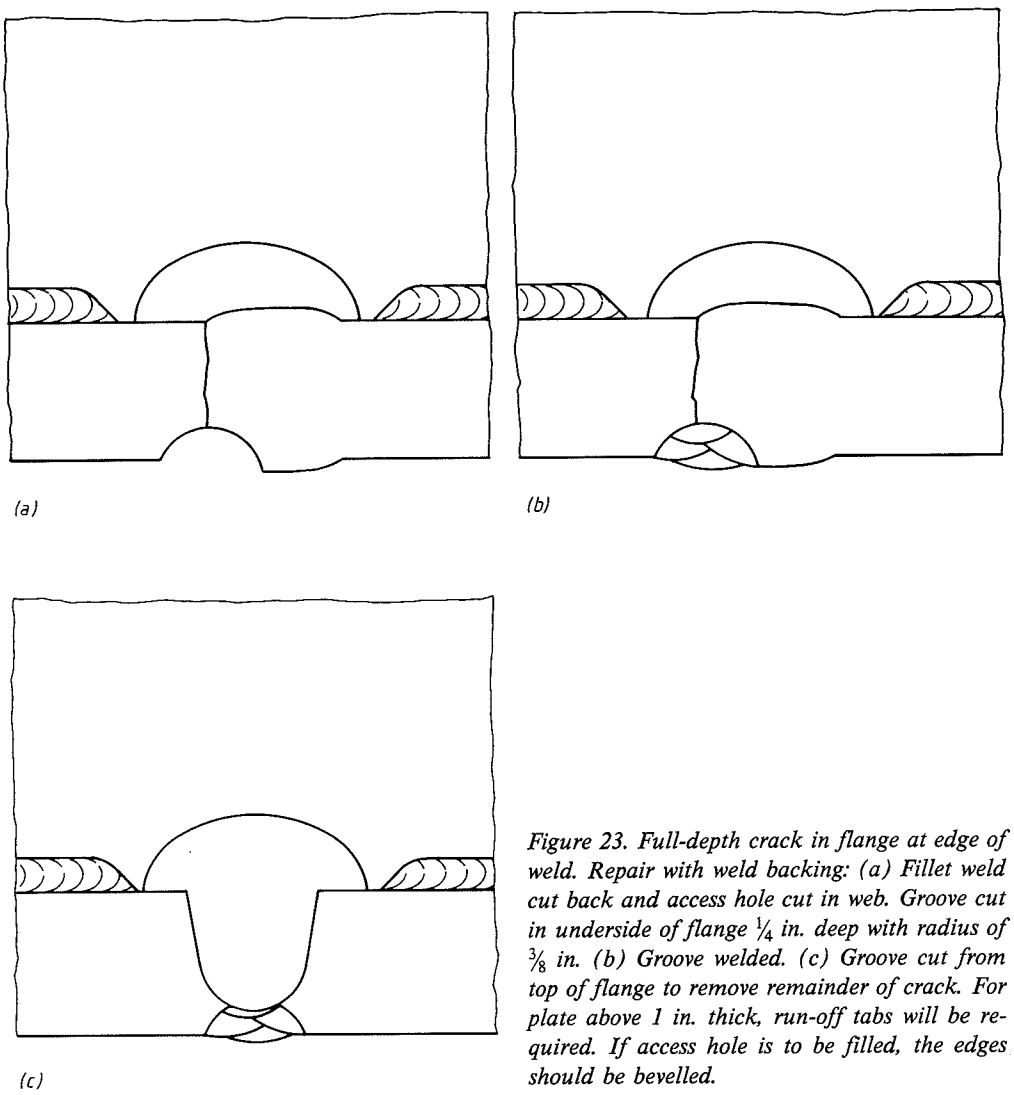

Figure 23. Full-depth crack in flange at edge of weld. Repair with weld backing: (a) Fillet weld cut back and access hole cut in web. Groove cut in underside of flange $^1/_4$ in. deep with radius of $^3/_8$ in. (b) Groove welded. (c) Groove cut from top of flange to remove remainder of crack. For plate above 1 in. thick, run-off tabs will be required. If access hole is to be filled, the edges should be bevelled.

wide gap, the materials on each side of the crack may be displaced sideways in different directions. In such cases, it may be possible to bring the materials back into line by means of jacks, and possibly even to close up the gaps, following which the groove preparations described earlier can be used.

Repair of wide cracks.

1. If the gaps cannot be closed and misalignment of the plates is considered unacceptable, the only course of action may be to replace part of the cracked member. On the other hand, if large gaps and misalignment are acceptable, the gaps can be repaired by welding. A highly skilled welder can bridge gaps by building up the crack face progressively with weld metal, but repair is simplified if a backing is used (Figure 25). If the gap is wide enough for manipulation of the electrode, it is not always essential to bevel the edges; but, for narrow gaps, a minimum bevel angle of 10 deg is recommended for ease of welding (Figure 25b).

2. Towards the end of a crack in a web, where the gap becomes narrower, it is necessary to gouge out a groove to make welding possible right to the end of the crack. The backing should be long enough to reach a short distance beyond the end of the crack.

3. If the plates are misaligned (Figure 26), it may only be necessary to bevel one crack face because the misalignment makes the other crack face readily accessible. Whether bevels are required on one or both sides will depend on the plate thickness, gap width, and amount of misalignment. The shape of the groove for repair will depend on obtaining sufficient access for manipulation of the electrode.

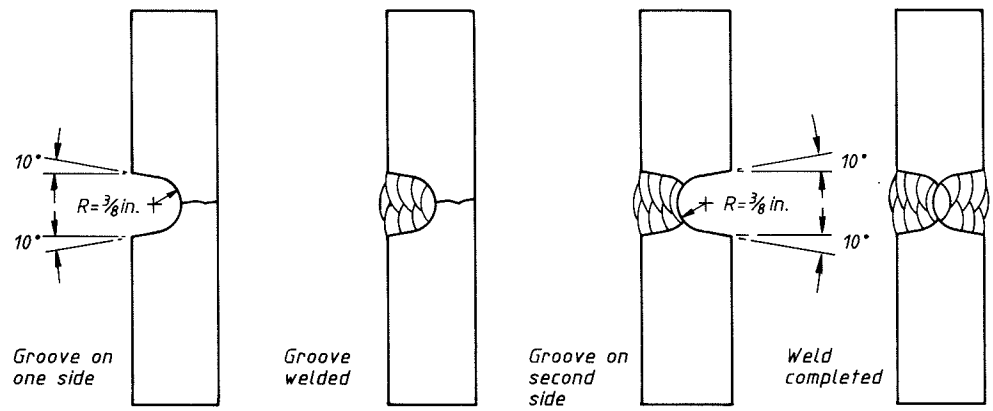

Figure 24. Full-depth crack in web.

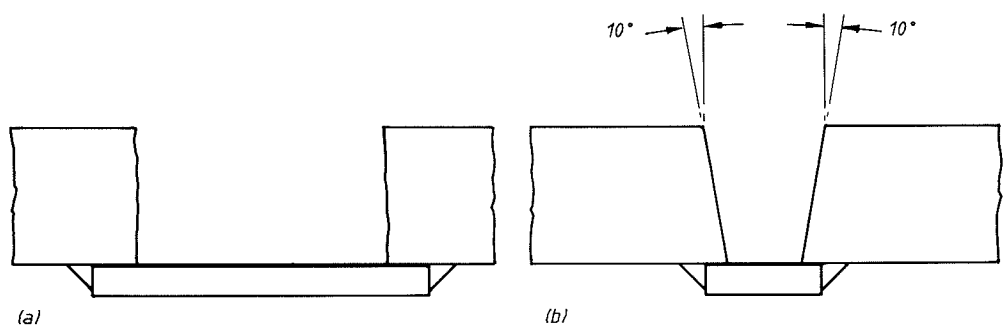

Figure 25. (a) Wide gap between crack faces. (b) Narrow gap 10-deg bevels required.

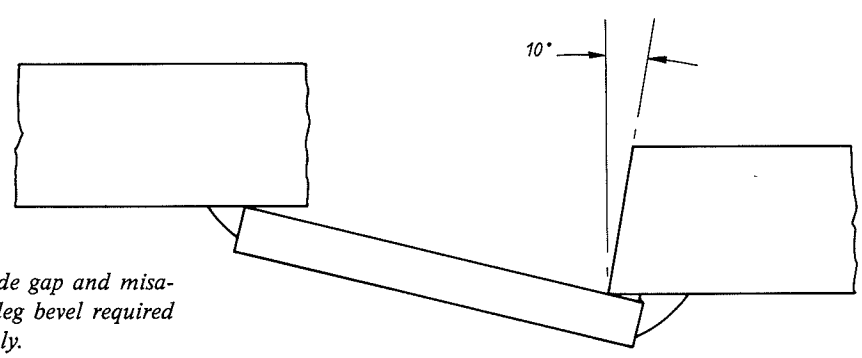

Figure 26. Wide gap and misalignment; 10-deg bevel required on one side only.

4. If there is misalignment, it is likely that the plates will also be bowed or twisted, and in this case the backing must be progressively pressed or hammered and tack welded into as close contact as possible with the plate.

5. After welding is completed all the backing material should be removed by grinding and the backing side of the weld inspected by magnetic particle or dye penetrant to check for absence of cracks.

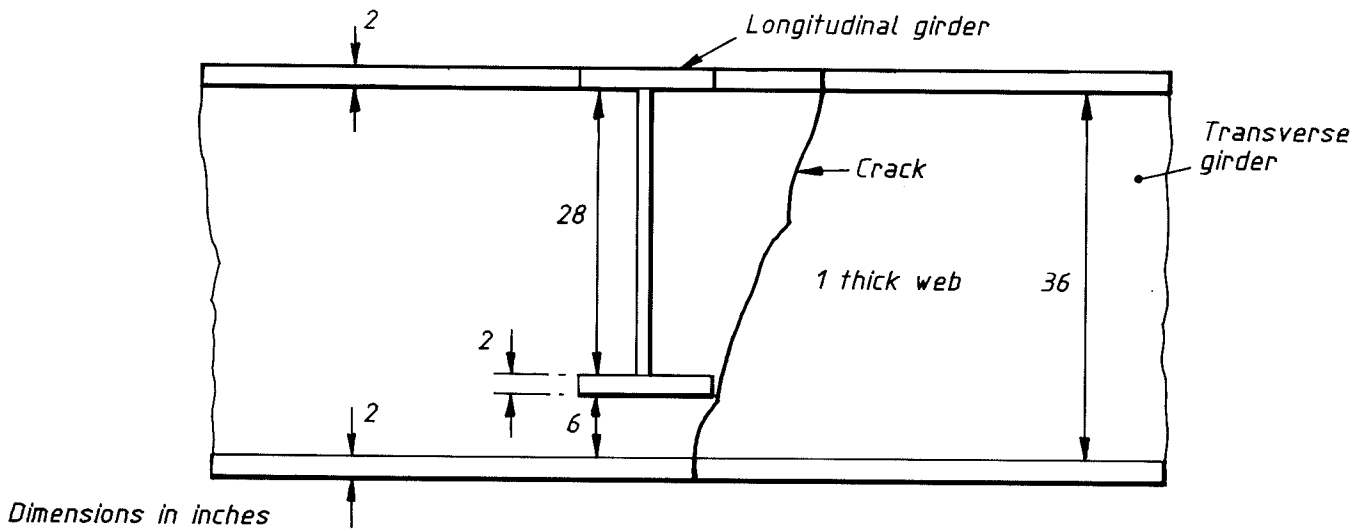

Figure 27. Major cracking in transverse girder initiated at toe of fillet weld on flange of longitudinal girder.

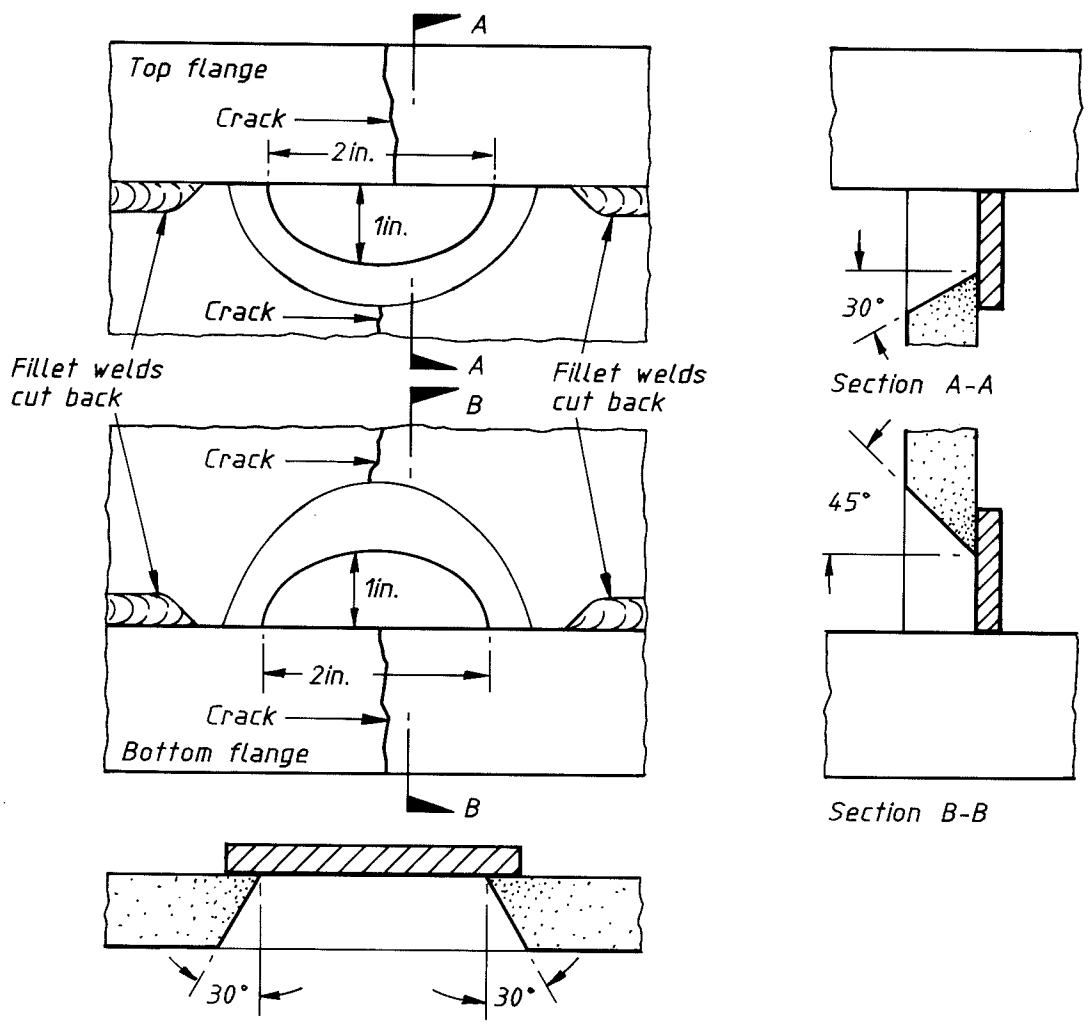

Figure 28. Access holes cut in web of transverse girder. If access holes are to be left unfilled, bevels are not required.

6. If defects are present, these should be repaired followed by further magnetic particle or dye penetrant inspection.
7. Final inspection should be by ultrasonic or radiographic testing.

EXAMPLES OF SPECIMEN REPAIR PROCEDURES

Typical repair procedures incorporating the principles laid down in the previous sections are described in this section.

Single Crack Running Through Web of Girder and Both Flanges

- *Type of Bridge:* Continuous plate girder.
- *Details of Failure:* Transverse plate girders with longitudinal plate girders passing through them (Figure 27). Fatigue cracking initiated in traverse girder at toe of weld on edge of bottom flange of longitudinal girder. The crack extended by brittle fracture through the full depth of the web and through both flanges of the transverse girder. The transverse girders are not fracture critical members, but the longitudinal ones are. Because of the extensive cracking it would be advisable to carry out post weld heat treatment after repair.

  Access is good except to top of bottom transverse flange underneath flange of longitudinal girder. The maximum gap between the crack faces is ⅛ in. and there is no misalignment.

  The concrete deck above the top flanges is broken open to allow access for preheating, gouging, and welding the crack in the top flange.
- *Material:* ASTM A588.
- *Dimensions:* All flanges 12 in. × 2 in. Webs 3 ft × 1 in. 2 ft × 1 in.
- *Repair Procedure:*
  1. Cut out access holes at top and bottom of web approximately 2 in. long and 1 in. high by combination of air carbon arc gouging and rotary burr (Figure 28). Before air carbon arc gouging preheat base metal locally to 150°F.
  2. Remove crack from underside of bottom flange to depth of approximately 1¾ in. by air carbon arc gouging a groove having a minimum groove angle of 20 deg with a minimum root radius of ⅜ in. (Figure 29a).
  3. Grind surface of groove smooth with rotary burr.
  4. Check that the sides of the groove are free from defects by magnetic particle inspection.
  5. Set up resistance heating mats on both faces of top and bottom flange. Alternatively, oxyfuel gas heating torch units can be used for preheating.
  6. preheat bottom flange to 300°F.
  7. Tack weld run-off tabs in place on both edges of bottom flange (Figure 29b). These are positioned, as shown, because most of the welding will be carried out in the overhead position because of restricted access to the top of the flange.
  8. Grind run-off tabs where they are in contact with flange so that they match the profile of the groove.
  9. Weld groove in overhead position with E7018 electrodes. Check each pass visually for freedom from cracks or other defects.

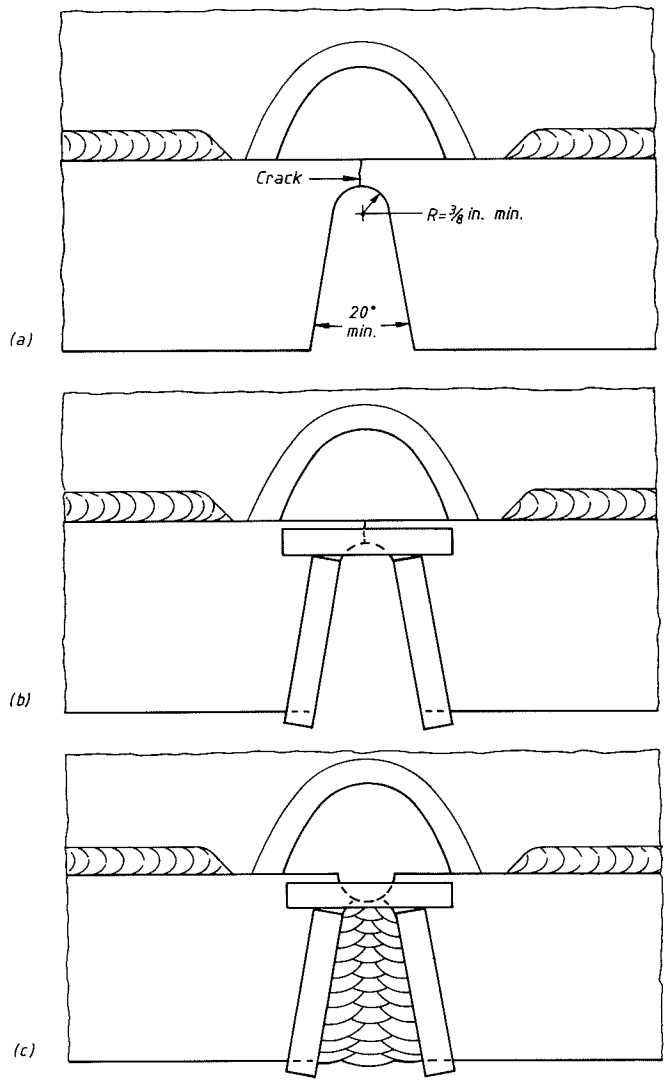

Figure 29. Grooves cut in bottom flange of transverse girder: (a) Groove cut in underside of flange; (b) run-off tabs tacked in place on both sides of flange; (c) groove welded in overhead position—groove cut in top side of flange.

  10. Remove crack from top surface of bottom flange by air carbon arc gouging to sound weld metal and form a groove having a minimum groove angle of 20 deg and a minimum root radius of ⅜ in. (Figure 29c). Continue the groove into the run-off tabs at each end of the groove for approximately 1 in.
  11. Grind surface of groove smooth.
  12. Carry out magnetic particle inspection to check that the sides of the groove are free from defects, and check that all traces of the fatigue cracks have been removed.
  13. Weld groove. Check each pass visually for freedom from cracks or other defects.
  14. Gouge out the web crack to half depth (Figure 30a) and remove fillet weld from edge of flange of longitudinal girder where it intersects the web. The groove adjacent to the edge of the flange of the longitudinal girder will have one side only bevelled (Figure 30b).
  15. Set up resistance heating mats or oxyfuel gas torch heating units on both faces of web.

16. Preheat web to 100°F.
17. Weld groove and replace fillet weld at edge of longitudinal flange of girder where it passes through the web under repair (Figures 30c, 30d).
18. Remove the web crack from the other side of the web by gouging to sound weld metal.
19. Weld groove and replace fillet weld at edge of flange of longitudinal girder where it passes through the web under repair.
20. Set up resistance heating mats or oxyfuel gas torch heating units on both faces of top flange.
21. Gouge a groove on the bottom surface of the top flange (Figure 31a). Before air carbon arc gouging, preheat base metal locally to 200°F.
22. Grind surface of groove smooth with rotary burr.
23. Check that the sides of the groove are free from defects by magnetic particle inspection.
24. Preheat flange to 300°F.
25. Deposit 3 or 4 weld passes to fill groove (Figure 31b). At both ends of the groove each weld pass should be continued around the bottom corner of the flange, and all excess weld metal should be ground flush with the surface and the edges of the flange so that no craters or notches are present and also to enable run-off tabs to be fitted.
26. Remove crack from top surface of flange by air carbon arc gouging a groove (Figure 31c).
27. Tack weld run-off tabs to top flange (Figure 31d).

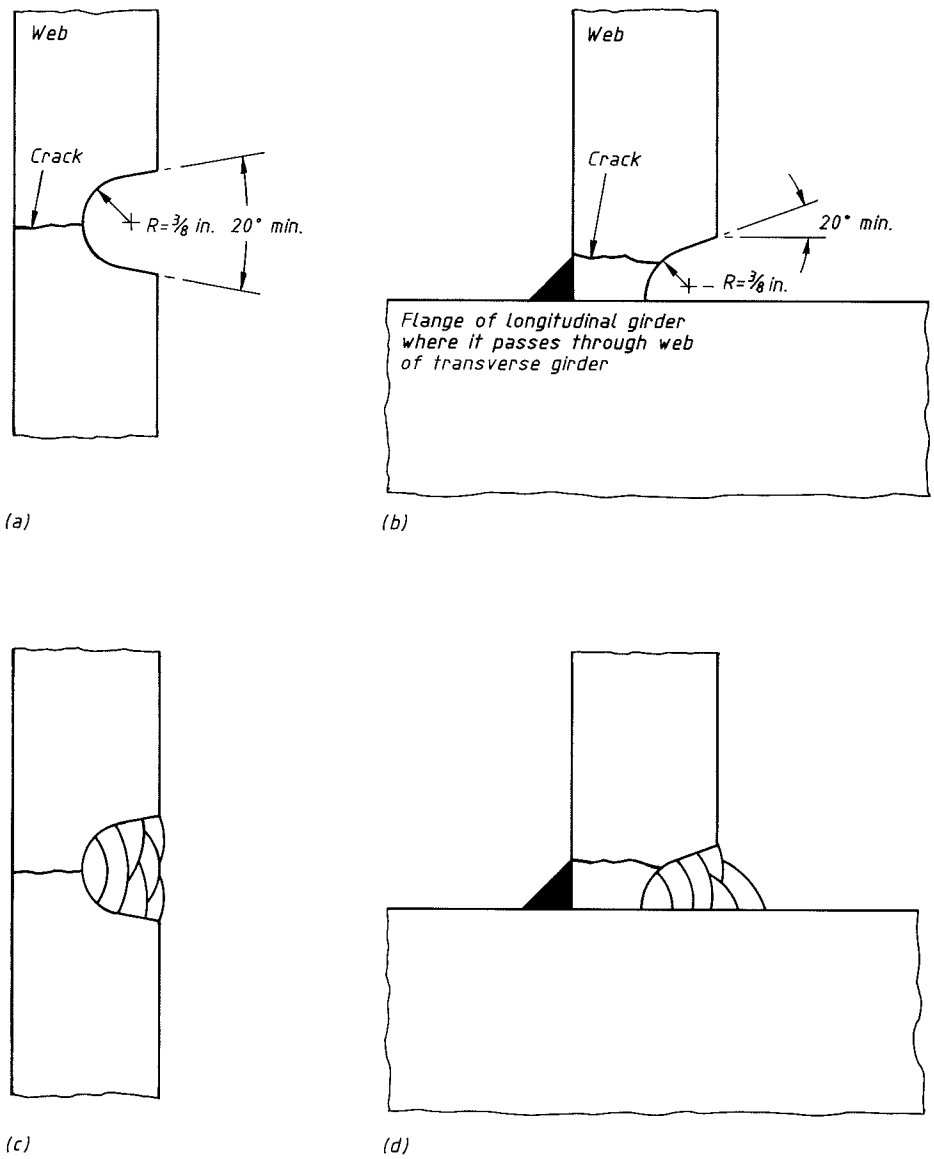

Figure 30. Grooves cut in web of transverse girder: (a) Groove gouged to half depth of web; (b) groove gouged to half depth of web adjacent to flange of longitudinal girder after removing fillet weld on one side of web; (c) groove in web welded in vertical position; (d) groove in web adjacent to flange welded in vertical position and fillet weld replaced—repair of web is completed after gouging a groove from the other side.

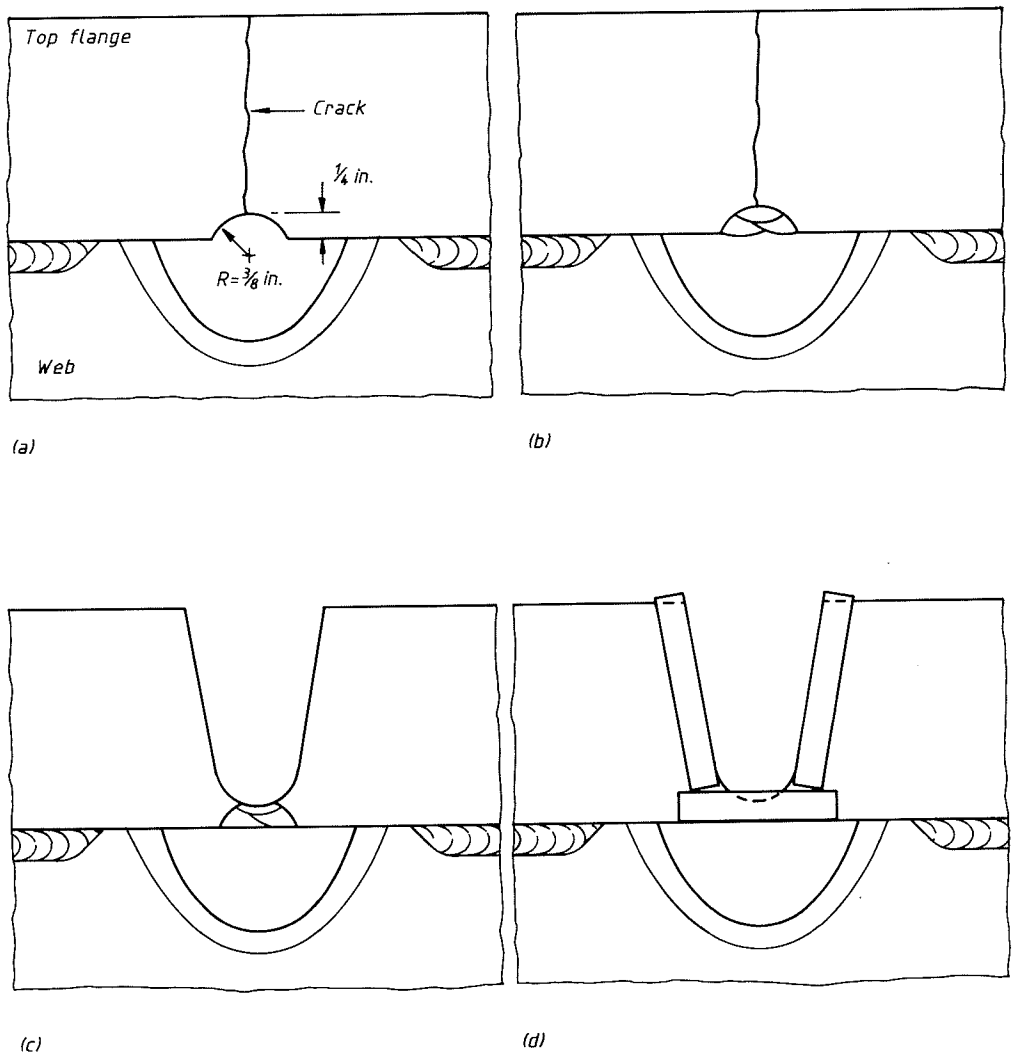

Figure 31. Grooves cut in top flange of transverse girder: (a) Groove cut in underside of flange; (b) groove welded in overhead position; (c) weld metal ground flush with weld surface—groove cut from top side of flange; (d) run-off tabs tack welded on each edge of top flange.

28. Grind run-off tabs where they are in contact with flange so that they match the profile of the groove.
29. Weld groove. Check each pass visually for freedom from cracks or other defects.
30. Fill access holes by welding and replace adjacent web to flange fillet welds.
31. Increase temperature in region of repair welds to 500°F and maintain this temperature for 4 hours for the flanges and 2 hours minimum for the web.
32. Remove heating mats or oxyfuel gas torches.
33. Remove run-off tabs and grind surface smooth.
34. Grind all repair welds flush with flange and web surfaces.
35. Inspect by magnetic particle or dye penetrant method.
36. Grind weld toes.
37. Carry out final inspection of complete repair by ultrasonic or radiographic testing. All welds, including filled access holes, must be checked.

Branching Crack in Web

- *Type of Bridge:* Continuous plate girder.
- *Details of Failure:* Plate girders with discontinuous vertical stiffeners (Figure 32). Fatigue cracking initiated at toe of fillet weld at end of stiffener and propagated vertically along toe of fillet weld on one side of stiffener and approximately horizontally through web. The girder is not a fracture critical member.
- *Material:* ASTM A36.
- *Dimensions:* Thickness of web and stiffener ½ in.
- *Repair Procedure:*
  1. Preheat plate locally to 100°F by hand-held oxyfuel gas torch.
  2. Remove fillet weld adjacent to vertical crack and from the end of the stiffener by air carbon arc gouging. Remove cracks by gouging to half plate thickness and form grooves

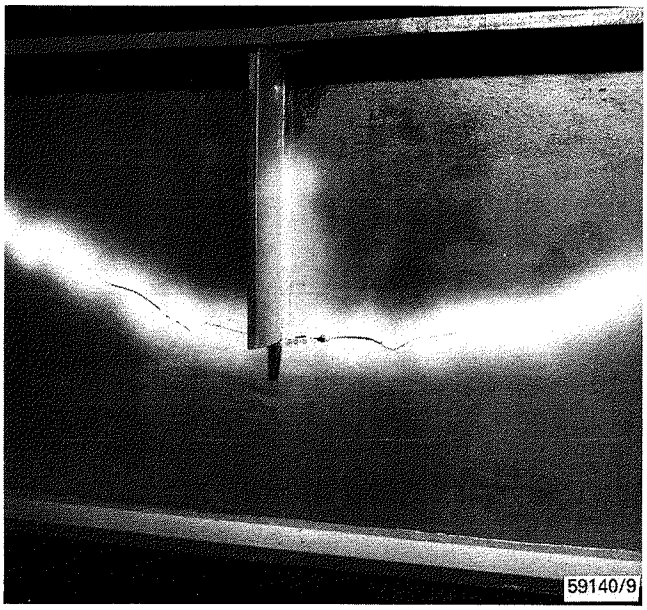

Figure 32. Fatigue cracks in web of girder and at edge of vertical fillet weld attaching stiffener.

8. Remove backing by air carbon arc gouging and rotary burr. Remove fillet weld from other side of web to the end of the vertical crack. Remove the cracks by air carbon arc gouging to sound metal.
9. Weld groove and replace fillet weld. Check each pass visually for freedom from cracks or other defects. Preheating can be discontinued immediately welding is completed.
10. Grind repair welds flush with surface of web on both sides of plate.
11. Inspect by magnetic particle or dye penetrant method.
12. Grind toes of fillet welds.
13. Carry out final inspection by ultrasonic or radiographic testing.

- *Extension of Stiffeners:* Grinding the toes of the fillet welds where they meet the surface of the web should increase the fatigue life beyond that of the original life. A further improvement in fatigue life would be obtained by extending the stiffeners to the bottom flange on both sides of the web as shown in Figure 34. A suitable procedure used on both sides of the web is as follows.

1. Form double bevel of 30 deg on end of stiffener to within 1 in. of the surface of the web by grinding.
2. Cut extensions to stiffeners from ½-in. thick plate with double bevel angle of 15 deg on one end and access holes having radius of approximately 1 in. Alternatively, triangular snipes can be cut. Length of added stiffener should leave a gap of approximately ⅛ in. for groove weld.
3. Preheat region of web, flange, and stiffener where added stiffener is to be welded and tack weld added stiffener into place.
   NOTE: Added stiffener should also be preheated before tack welding.
4. Weld one side of groove with E7018 electrodes.
5. Grind out reverse side of groove to round weld metal.
6. Weld second side of groove. The groove weld should be at least wide enough to insert the thumb (Figure 33). In the present example multiple cracking was present in three small areas and when these were gouged out three holes were present.
7. Deposit fillet weld between web and stiffener.
8. Grind surface of groove smooth with rotary burr.
9. Preheat plate locally to 200°F and tack weld backing to the other side of the web behind the three holes.
10. Preheat region of groove to 200°F by hand-held oxyfuel gas torch or by the use of resistance heating mats.
11. Weld groove and fill holes by welding with E7018 electrodes. Check each pass visually for freedom from cracks or other defects.

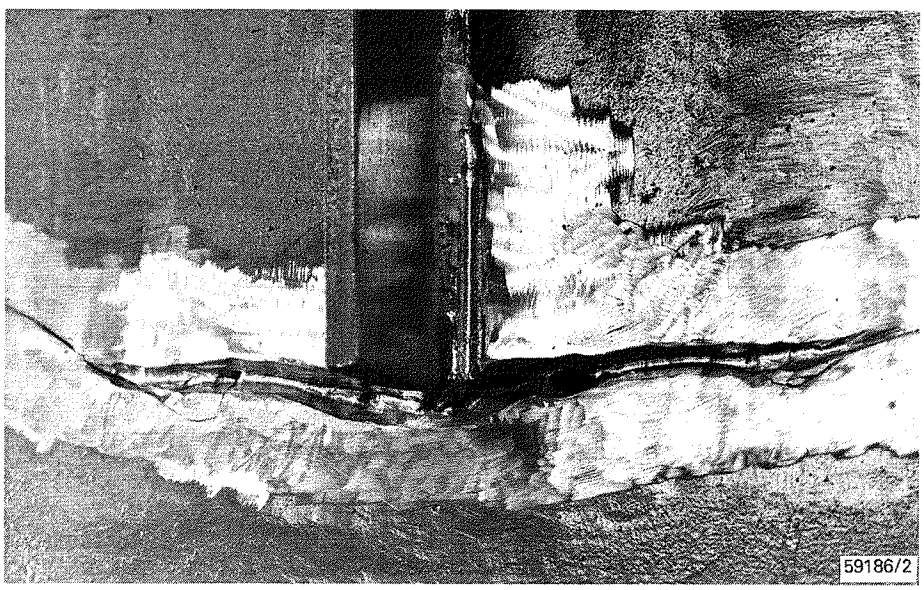

Figure 33. Groove gouged to approximately half-plate thickness. Gouging has opened up a hole through the plate where a branching crack was present. Further gouging is required to open up two more holes.

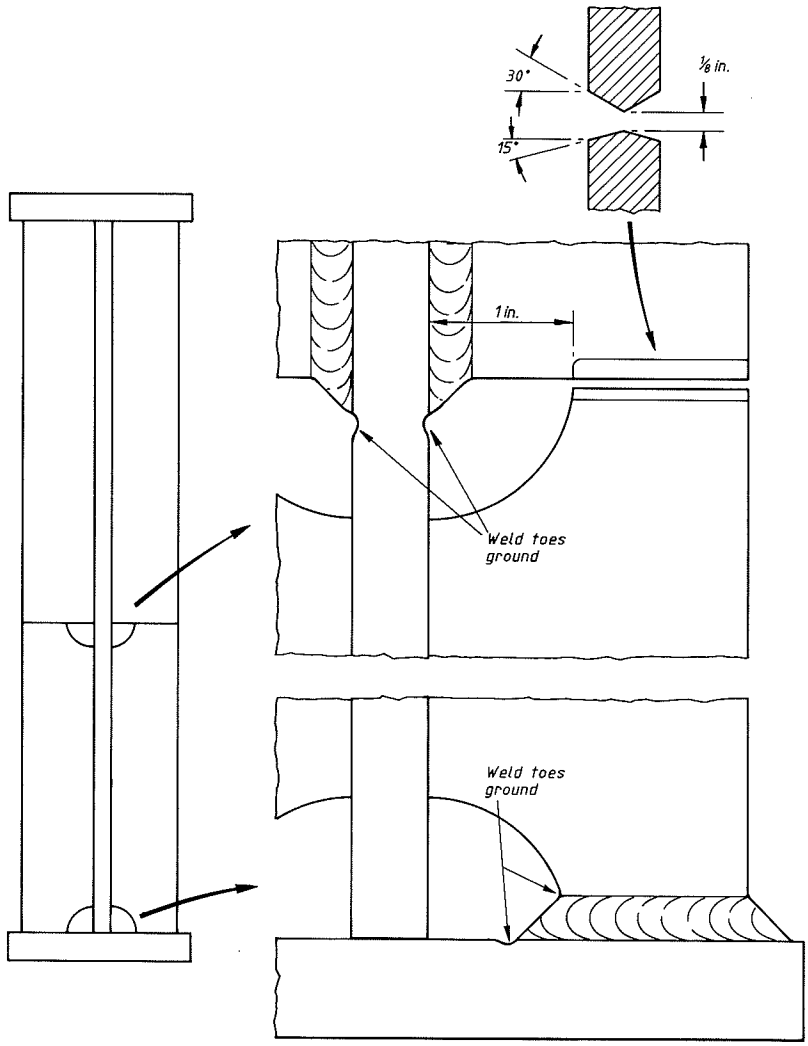

Figure 34. Extension of stiffeners to bottom flange.

continued around the inside of the access hole or snipe.

7. Deposit fillet weld between added stiffener and web and also on bottom flange. Fillet welds should be continued around the inside of the access holes or snipes and around the outer edge of the stiffener where it is welded to the flange.
8. Preheating can be discontinued immediately welding is completed.
9. Inspect by magnetic particle or dye penetrant method.
10. Grind groove weld flush with surface of stiffener, and grind weld toes and weld surfaces inside the access hole or snipe. Grind the inside surfaces of the access holes and remove sharp corners.
11. Carry out final inspection by ultrasonic testing.

REPAIR WITH INSERT PLATES

When cracking is extensive, particularly when branching cracks are present (Figure 35), it may be quicker or more convenient to cut out a section containing the cracks and weld in an insert plate.

The replacement of a damaged web section consists typically of cutting out a rectangular section with rounded corners by

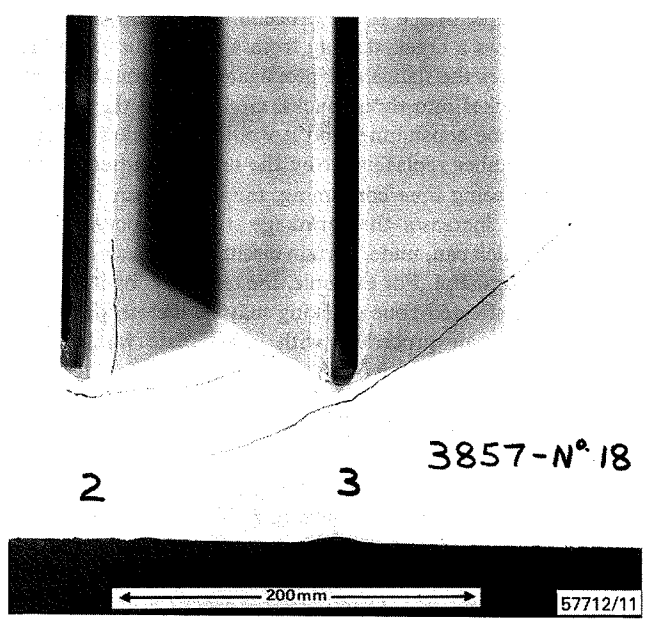

Figure 35. Branching cracks that are closely spaced and should be repaired by replacement with an insert plate.

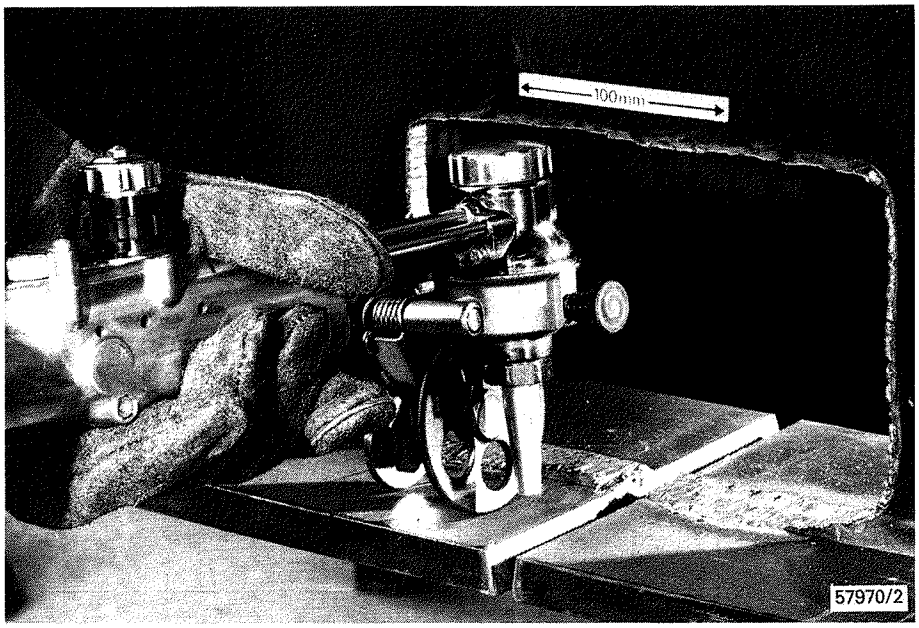

Figure 36. Hand-held motorized cutting torch adjusted to give 10-deg bevels to groove in flange. (Photograph courtesy of Koiki UK Limited)

oxyfuel gas cutting. If the straight line cuts are longer than 12 in., it is advantageous in terms of both speed and accuracy to use mechanized cutting by attaching the cutting torch to a motorized carriage which rides on a track. The track can be attached to the member by clamps or magnets or by the use of suction pads. Mechanized flame cutting can also be used to form grooves in flanges when a section of flange is replaced.

Flame cutting can also be facilitated by the use of a hand-held cutting torch having a motor-driven driving wheel which rotates at speeds that can be selected according to the thickness of the member (Figure 36). The driving wheel can be inclined to give the required bevel angle by adjustment of a parallel free running wheel. Alternatively, an oxyfuel gas torch supported on a carriage running on a track can be used.

As an example of the repair procedure with an insert plate, Figure 37 shows a crack starting from a flange butt weld. The crack penetrates the flange and propagates up through the web where it branches into three cracks. Gouging out the cracks is feasible but time consuming, and it would be quicker to repair by partial member replacement by the use of an insert plate.

As well as being time consuming, the weld repair of closely spaced cracks increases the shrinkage strains imposed on the base metal which can, under certain circumstances, cause cracking of the base metal. For example, the tendency for hydrogen-induced heat-affected zone cracking may be increased.

A typical repair procedure with insert plate would be as follows:

1. Remove fillet welds between web and bottom flange by air carbon arc gouging.
2. Cut out section of web following dotted line (Figure 37). At the corners a minimum radius of 6 in. is recommended.
3. Grind remnants of web and fillet welds flush with surface of flange so that the insert plate can be supported on the flange and be slid into position. Grind original groove weld flush with surface of flange.
4. Cut a groove in the flange to remove the crack by oxyfuel gas cutting (Figure 38a). The bevel angles of the groove should be 10 deg minimum and the root gap should be $^5/_{16}$ in. minimum.
5. Set up resistance heating mats or oxyfuel gas torch heating units on both faces of flange.
6. Preheat flange in accordance with Table 5.
7. Tack weld run-off tabs and backing to flange (Figure 38b).
8. Weld groove in flange. Check each pass visually for freedom from cracks or other defects.
9. Remove backing and run-off tabs and grind weld metal flush with surface of flange on both sides and edges. In critical applications, e.g., when post weld heating is to be carried out, the preheat temperature should be maintained for the duration of the flange repair. After welding the flange there are two

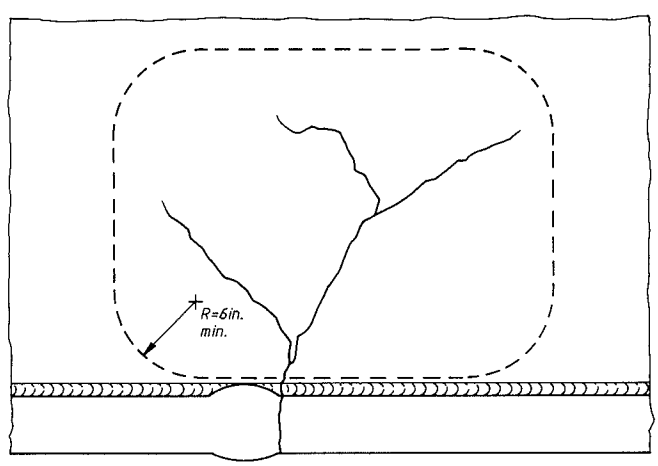

Figure 37. Partial replacement of member by insert plate. Dotted line shows cut out. The extensive cracking may cause large gaps in the flange and web, and the flange may require straightening by jacking. The bottom flange may need supporting to prevent deformation when large cutouts are made.

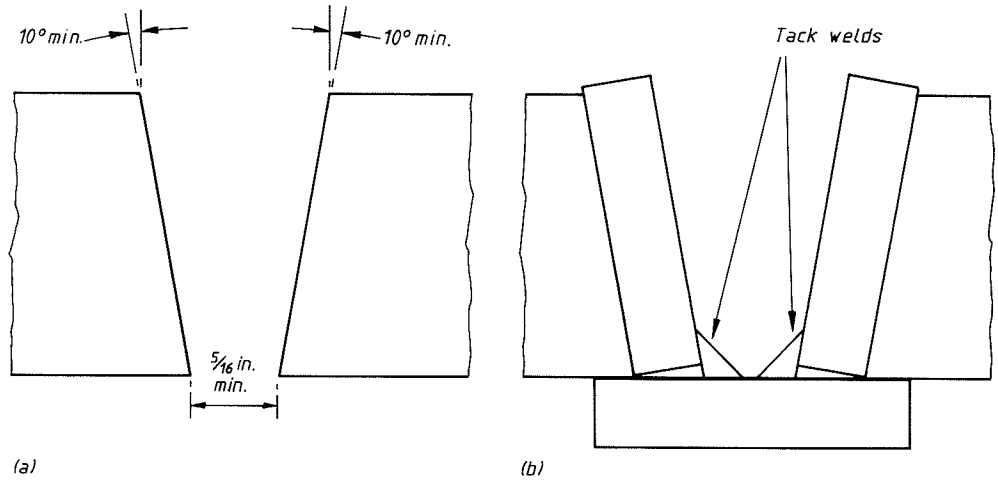

Figure 38. Groove cut in flange by oxyfuel gas: (a) dimensions of groove; (b) run-off tabs and backing tack welded in place.

alternative procedures: (a) carry out post weld heating of flange and then allow the flange to cool to ambient temperature, or (b) maintain preheat temperature of flange until all repair welding is completed and carry out post weld heating of flange at this stage.

10. Inspect flange repair by magnetic particle inspection. (For final inspection see step 21).

11. Cut an insert plate from similar material to the web. This can be done by measurement or by marking the shape of the hole on a wooden board held against the web. The board is then cut to the outline of the hole and can be laid on the plate to be used for the insert.

12. Cut the edges of the insert plate to double bevels of 45 deg minimum on the top and bottom edges and 50 deg minimum on the sides. Allow a minimum gap of ⅛ in. all around (Figure 39).

13. Position the insert plate in the hole, grinding to fit as necessary, and maintain the ⅛-in. gap at the flange by supporting the insert plate on two ⅛ diameter wires which are ground out after tack welding.

14. Preheat part of web and insert plate locally in accordance with Table 5 and tack weld insert plate into place.

15. Preheat region of groove to required temperature and maintain as a minimum temperature for duration of repair.

16. Weld groove and check each pass visually for freedom from cracks or other defects.

17. Replace fillet welds between web and flange.

18. Apply post weld heat if required.

19. Grind repair weld flush with surface of web.

20. Inspect by magnetic particle or dye penetrant methods.

21. Carry out final inspection by ultrasonic or radiographic testing.

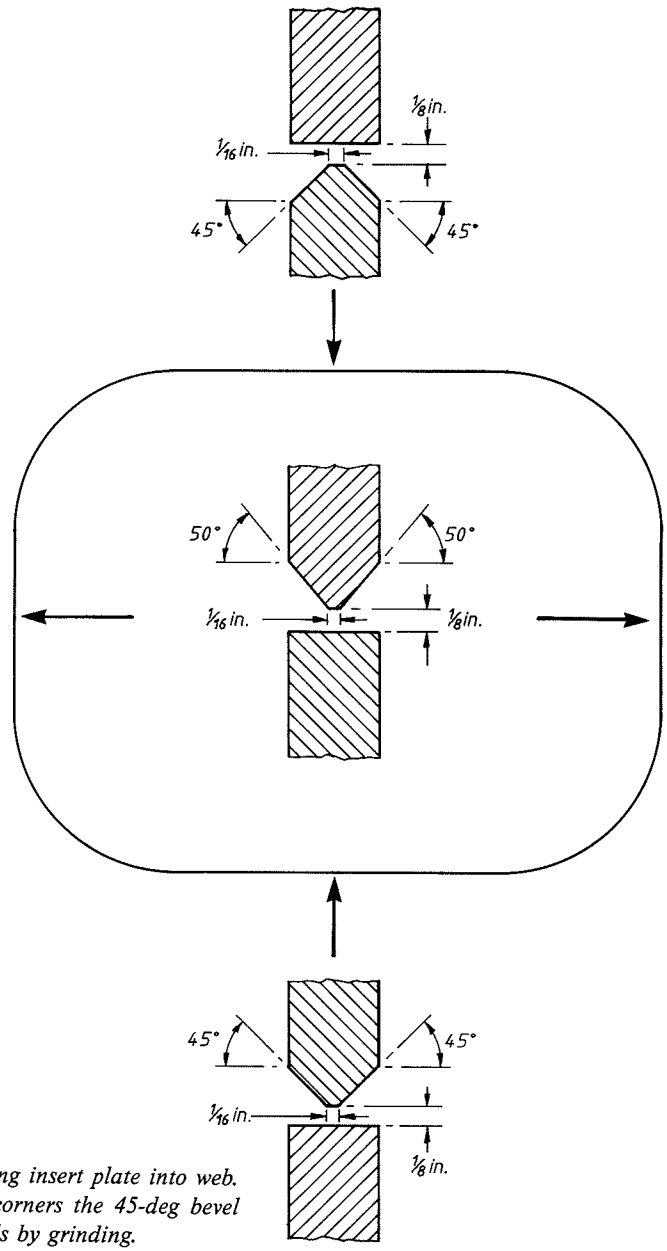

Figure 39. Groove dimensions for welding insert plate into web. Bevels are cut on insert plate. At the corners the 45-deg bevel angles are merged into the 50-deg bevels by grinding.

REPAIR OF HOLES

In some cases it may be necessary to fill holes with weld metal, for example, when repairing access holes that have been

cut to facilitate the welding of grooves. Another example is the filling of holes drilled to prevent the propagation of cracks or the filling of mislocated fastener holes or repair of rivet holes. However, the preferred method of filling misplaced fastener holes is by a high strength bolt.

Access Holes

The preparation and repair of access holes is covered in a previous section. Suitable dimensions and bevel angles are shown in Figures 7a and 7b.

Fastener and Crack Prevention Holes

Round holes can be filled by using a backing that is removed by gouging and grinding after the weld is completed; however, welds made in this manner, i.e., with a minimum of preparation, are likely to contain defects. To obtain a high quality weld the following repair method is recommended:

1. Insert a plug into the hole to one-half the hole depth. The plug material should be the same as the base metal if available. Otherwise, use A36 steel for the plug (Figure 40).
2. Prepare a boat-shaped cavity by air carbon arc gouging or by grinding from the unfilled side of the hole (Figures 40 and 41).
3. After preheating to the required temperature fill the cavity by welding with low hydrogen electrodes. Use stringer beads and do not use a continuous plug welding technique.
4. Backgouge to sound weld metal, removing the plug in the process and form a cavity from the other side of the plate similar to the first weld cavity.
5. Fill the cavity by welding.

In the foregoing examples, if access to one side of the plate is restricted, the depth of the cavity on the first side can be increased so that most of the weld is deposited from this side. For example, in a horizontal plate up to 100 percent of the welding could be carried out in the flat position by the use of a thin plug or by the use of a backing on the underside of the plate.

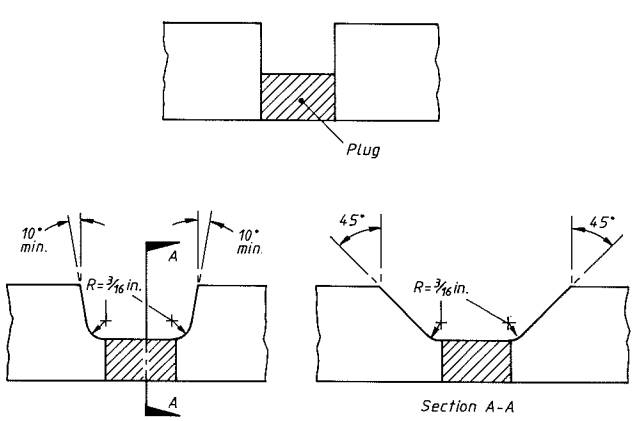

Figure 40. Preparation for repair of hole in horizontal plate.

Alternative Method of Hole Repair

The use of high strength bolts to prevent crack initiation and propagation from a hole was described earlier in this chapter under "Crack Removal," subsection "High Strength Bolts." This is a viable method of retrofitting holes and could be considered as an alternative to welding.

REPAIR UNDER DYNAMIC LOADING

Experimental work has shown that it is possible to carry out the repair of a crack that is opening and closing, i.e., under conditions of dynamic loading. However, the preferred procedure is to close the bridge to traffic while the root pass and possibly a second pass of weld metal are deposited. The welding operation can then be completed with the bridge open to traffic. Only when it is difficult to close the bridge to traffic should repair under dynamic loading be considered. The procedure is as follows:

1. After gouging a suitable groove either from one or both sides of the cracked member, a root pass of weld is deposited at the outer ends of the groove where the gap is opening to a maximum of approximately $\frac{1}{32}$ in.
2. If a root pass is deposited on wider gaps, the solidifying weld is likely to crack. However, short lengths of weld, up to about 4 in. long can lock the groove and restrict movement. When a sound root pass is obtained there is no difficulty in completing a weld.
3. An alternative procedure for dealing with gaps that are opening and closing is to wedge the gap open to its maximum extent by inserting pieces of metal in the gap to restrict the movement.

It should be noted that welded repair of open cracks, repaired under either dynamic or static loading conditions, will cause

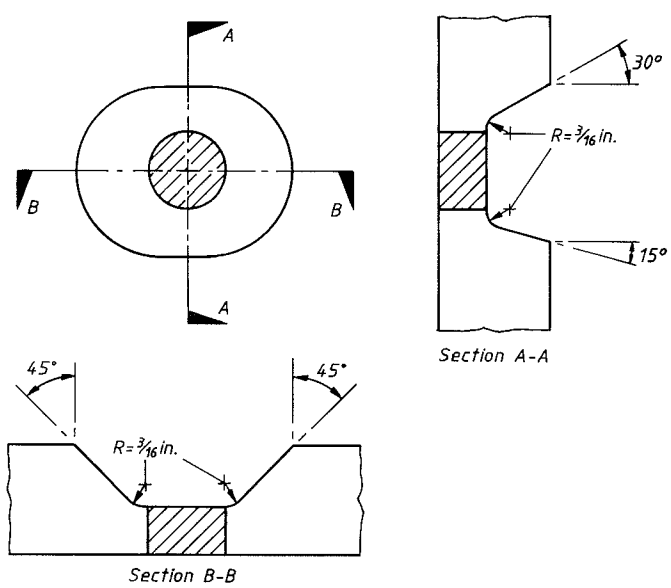

Figure 41. Preparation for repair of hole in vertical plate.

small local dimensional changes that may affect the stress distribution in the surrounding steelwork.

Caution should be exercised before repairing cracks under dynamic loading because an open crack is transferring load to another part of the structure. Any further extension of a crack caused by stresses set up by a gouging operation could create problems such as an unacceptable degree of deformation of the structure. Adequate support of the structure during repair is important.

EQUIPMENT

The equipment requirements for bridge repair will depend on the extent of the damage and the magnitude of the repair operation. Guidance on the minimum requirements based on those specified by the New York DOT is given in Table 7. This table shows the equipment required for both heat straightening and welding repair.

Additional equipment may speed up the repair. For example, if two 300 A welders are used, one can be used for gouging and one for welding. These power sources will not be suitable for magnetic particle inspection which requires peak currents of 700 A to 1,000 A.

For close control of preheating temperatures, especially when extensive repairs are required, it is advisable to use electric resistance heating elements with correctly positioned thermocouples and automatic temperature controllers and recorders. The application of electric preheating equipment is a highly skilled task, and the operators should be adequately trained if the full effectiveness of the method is to be realized. It is frequently more satisfactory to employ preheating contractors for this job rather than to rely on personnel who are not using the techniques on a daily basis.

Table 7. Equipment for heat straightening and welding. (Based on New York Department of Transportation requirements for minimum equipment necessary to initiate repairs with a single crew. If more than one crew is used in the work, additional equipment will be required. Expendables must be replaced as the work progresses.)

The following equipment should be assembled at the work site at the beginning of the repair:

1. Platform Truck - adjustable height. 8' x 8' work platform.
2. 300 amp DC welding machine.
1. 450 CFM - Air Compressor. Note: The Compressor is to be used for gouging, chipping, grinding, bolting and forced air cooling. The contractors attention is directed to the provisions of the Occupational Safety and Health Act which limits air cleaning pressure to 35 psi. 100lbs per square inch is required for air cooling. It may be necessary to furnish suitable protective equipment for the workmen during air cooling. (Forced air cooling is optional. The contractor may elect to let the steel cool down without artificial cooling).
1. Impact wrench with sockets.
1. Oxy-acetylene cutting unit.
1. Air carbon arc gouger (3/8" electrode capacity, swivel head unit with 2 air nozzles minimum).

   Furnish with ¼" gouging electrodes.
2. High speed disc grinders with extra 4½" and 9" diameter grinding discs.
1. 20,000 rpm pencil grinder with rotary burrs and carborundum grinding cone.
2. Propane heating torch units complete with propane and oxygen gauges, 100ft of hose for each unit, pigtails (manifolds), "T" connections, 4ft long heating torches equipped with heating tips equivalent to Harris #3H and #5H. Each heating unit should be set up with one, 100lb tank of propane and two, 240 (K) tanks of oxygen.
2. 25 ton hydraulic jacks (Enerpac model S-178 or equal), with 2 gallons spare hydraulic fluid.
1. 50 ton hydraulic jack (Enerpac model RC-506 or equal).
1. 10 ton hydraulic jack (Enerpac model RLC-101 or equal).
2. 6 ton chain come-a-longs.
1. Generator, (3,000 watt minimum, 110 volts).
1. Electrode drying oven.
1. Pneumatic chipping gun with chisels for slag removal.
6. 8" x 8" x 10' oak timbers (minimum).
1. Chain saw.

   Assorted hardwood wedges.
1. 50lb hermetically sealed container of E7018 5/32 diameter electrodes.
4. 100lb tanks of propane.
16. Oxygen cylinders as described above.

   Temperature measuring devices such as contact pyrometer or temperature indicating crayons.

   Safety equipment for all workmen, inspectors, etc
   Traffic control materials and equipment.

CHAPTER FIVE

IMPROVING THE FATIGUE STRENGTH OF WELDED JOINTS

GENERAL

There are two main reasons why it is often necessary to improve the fatigue strength of a particular welded joint in a structure: (1) The fatigue design calculations may have shown that the as-welded joint possesses an inadequate life and it may not be possible to reduce the service loads or redesign the connection using a joint geometry with a better fatigue performance. (2) A welding repair may have been carried out to a service fatigue crack, without modifying the design. Under these circumstances it would be advisable to apply a fatigue improvement technique to reduce the likelihood of further failure.

For load carrying joints, fatigue failure by cracking from the weld root must always be considered. However, this failure mode is normally confined to partial penetration groove welds and undersized fillet welds. In the majority of cases the weld toe is the most likely fatigue crack initiation site. This is because of the existence of small intrusions at the weld toe which act as pre-existing cracks and start to propagate almost as soon as cyclic loading commences. In addition, the change of section occurring at the joint leads to a stress concentration at the weld toe. The growth of fatigue cracks in as-welded structures is also

influenced by the presence of large tensile residual stresses as a result of the welding process.

The fatigue strength of a welded joint prone to failure from the toe can be improved by application of one of a variety of established post weld fatigue improvement techniques.

All these techniques rely to a greater or lesser extent on removing the intrusions, reducing the joint stress concentration, or modifying the residual stress distribution. Two broad groups of techniques can be identified: (1) modification of the weld toe profile, and (2) modification of the residual stress distribution.

MODIFICATION OF THE WELD TOE PROFILE

The objective of this group of techniques is the removal of the intrusions at the weld toe and the achievement of a smooth transition between weld metal and parent plate. This has the effect of increasing the time for crack initiation with a resulting increase in fatigue life, and a fatigue limit may occur at stresses that are much higher than for as-welded joints.

Local Machining—Grinding

It is possible to improve the weld toe profile and to remove the slag intrusions by grinding. The forms of grinding usually employed are either a rotary burr or a disc grinder.

Either the whole weld surface or just the weld toe may be treated. The degree of improvement achieved increases as more care and time are taken. Disc grinding the weld toe is suggested as a suitable compromise between benefit obtained and time required. Grinding is the most common improvement technique.

Remelting Techniques

In welds made by the gas tungsten arc welding (GTAW) stringer bead process, there appear to be no slag intrusions at the weld toe. Thus, joints made by this process would be expected to possess good fatigue strength. GTAW is not a practical process for the majority of structures, but it can be used to improve the fatigue strength of joints made by other processes. This is achieved by remelting the existing weld metal to a shallow depth along the weld toe, thereby removing the intrusions and generally improving the toe shape.

Remelting the weld toe using a plasma arc is a similar technique but, because of the wider weld pool, plasma dressing is not as sensitive to the electrode position as GTAW dressing.

Special Electrodes

A number of manufacturers have developed shielded metal arc welding electrodes that are designed to provide an improved geometry at the weld toe. This is achieved by the use of suitable flux to obtain good wetting characteristics. The electrodes are intended to be used for the final weld pass in joints made in weldable high strength steels.

It is understood that these electrodes are used extensively in Japan, particularly in bridge structures. A possible limitation on their use is that it may be practical to obtain the improved weld toe geometry when welding in the flat position but for positional welding the improvement may not be marked.

RESIDUAL STRESS TECHNIQUES

In the absence of residual stresses, the stress range to cause failure at a given endurance is not very sensitive to mean stress if the applied stresses are wholly tensile. If the applied stresses are partly compressive, however, an increase in stress range for the given endurance occurs and becomes steadily larger as the compressive proportion of the stress cycle increases. This occurs because compressive stresses are less damaging than tensile stresses.

As a result of the presence of large tensile residual stresses in as-welded joints, applied stress cycles with a nominally compressive component generally become wholly tensile in the vicinity of the weld toe. Thus, the stress range to cause failure after a given endurance is almost constant over a wide range of mean stresses. Stress relief itself, therefore, is a potential fatigue strength improvement technique when the applied stresses are at least partly compressive.

Residual stress techniques to increase fatigue life generally rely on the creation of compressive residual stresses in the regions where fatigue cracks are likely to initiate. In this way, even a wholly tensile stress cycle can be made at least partly compressive in the regions of interest.

Stress Relief

Stress relief, whether carried out using thermal or vibratory techniques, provides a method for improving fatigue strength when the applied stresses are at least partly compressive. Unlike most other residual stress techniques, stress relief does not introduce compressive residual stresses but relies on the removal of tensile residual stresses so that compressive stresses may be experienced at the weld toe. It should be realized that vibratory stress relief techniques may use up a considerable proportion of the fatigue life of a structure themselves. In any case, these methods are not generally applicable to large structures such as bridges.

Peening

Peening is a cold working process in which the surface of the component is deformed either by a high velocity stream of metal particles (shot peening) or by a tool (hammer peening). The objective is to produce plastic deformation of the surface so that under each impact the surface layer attempts to expand laterally but is prevented from doing so by the elastic material underneath. Thus, residual compressive stresses are created in the surface layer. Both the work hardening and the residual compressive stresses are beneficial and, additionally, the weld toe profile may be improved, thus reducing the severity of the stress concentration.

Spot Heating

Spot heating involves heating the structure locally, usually with an oxyacetylene gas torch, so as to produce yielding as a result of thermal stresses. The residual stresses, therefore, are formed by a similar mechanism to that involved in the formation of residual stresses during welding. Thus, the region treated

becomes an area of residual tensile stress. The compressive residual stresses employed in the fatigue improvement technique exist some distance from the heated spot and are formed because the internal residual stress distribution must be self-balancing.

COMPARISON OF TECHNIQUES

Many of the techniques discussed have been studied at The Welding Institute using mild steel specimens. The results are shown in Figure 42a for traverse nonload carrying joints and in Figure 42b for those with a fillet welded longitudinal gusset. Similar results have been obtained for both joint geometries and all the techniques exhibit similar fatigue characteristics. At high stresses, at best only a small increase in fatigue life is observed, but as the stress is reduced an increasing improvement in fatigue life is obtained. In addition, for many techniques there is evidence of a fatigue limit well above the as-welded fatigue limit. Thus, for a joint that experiences only very high stresses, only limited benefit can be gained irrespective of the technique applied. If, however, a joint is subjected to relatively small stress, clearly a very large increase in fatigue life can be obtained.

Considering these techniques in the context of their intended application, toe grinding methods are chosen as the most practical and economical methods of achieving a worthwhile improvement in fatigue strength. Their application is considered in detail below.

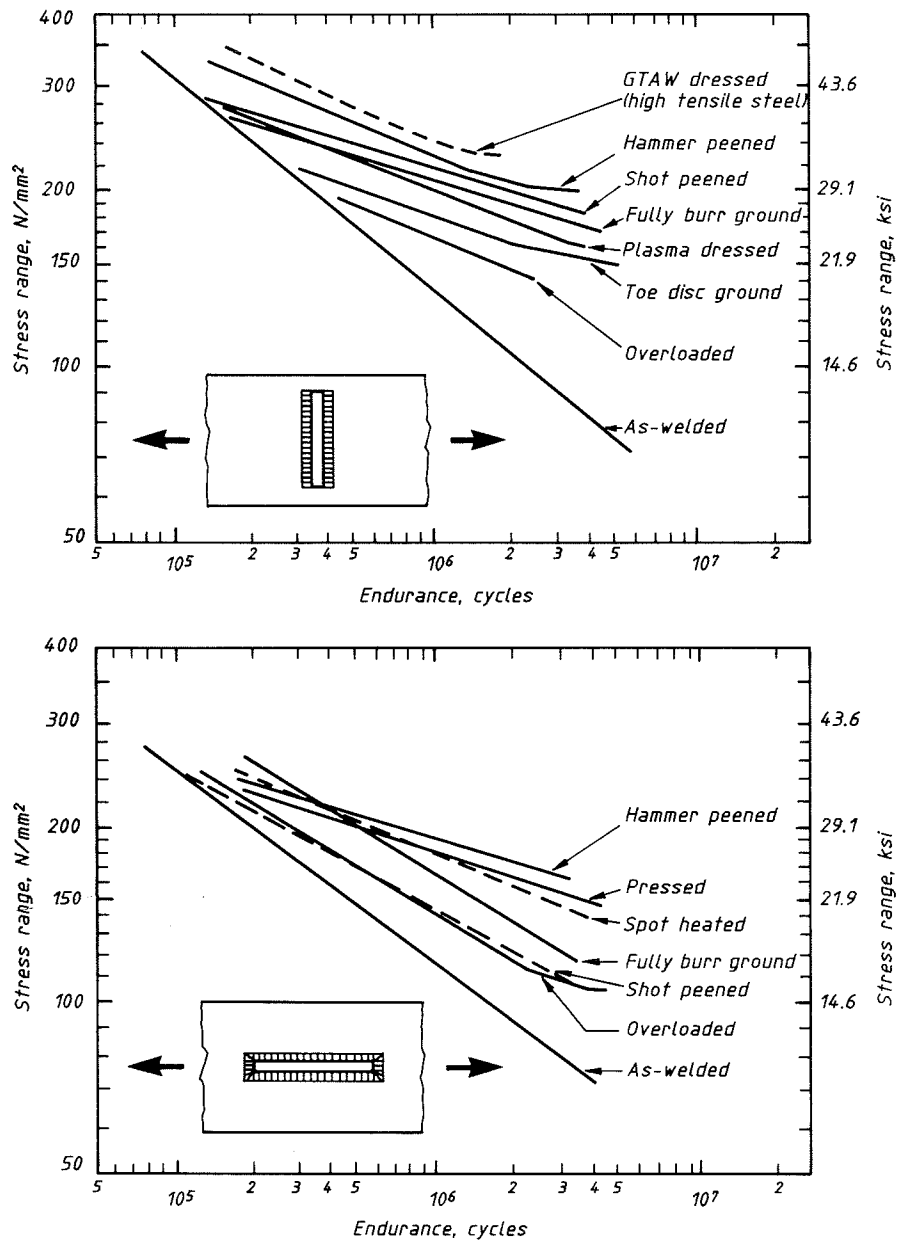

Figure 42. Effect of improvement techniques applied to mild steel nonload carrying fillet welded joints: (a) transverse; (b) longitudinal.

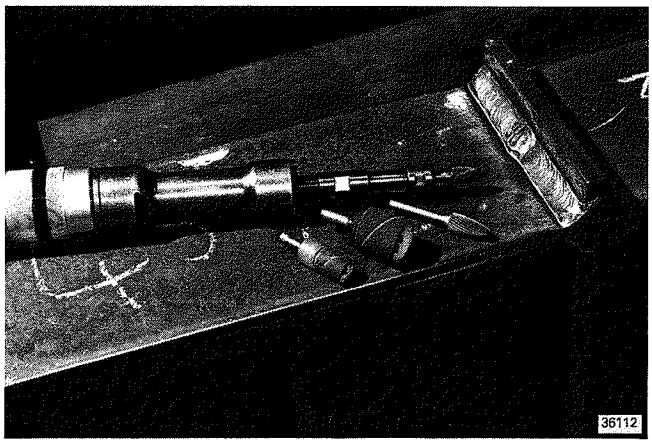

Figure 43. Burr grinding equipment.

ROTARY BURR GRINDING

Equipment

The following equipment is required: (a) high speed rotary air tool, 15,000 to 20,000 rev/min with oil spray mist unit; (b) air supply at 80 psi to 100 psi; (c) tungsten carbide rotary burrs—tip radius $^3/_{16}$ in. to $^5/_{16}$ in.; and (d) protective clothing (including leather jacket and gloves, face mask and goggles, and ear protection).

Figure 43 shows a typical rotary tool, together with two burrs and two polishing bands. After grinding, the polishing bands may be used to achieve a very smooth surface. This requires considerable additional time, however, and probably is not justified in view of the small extra benefit gained except for very critical regions. For the purposes of this chapter it will be assumed that only the burr grinding operation is carried out.

Method

The rotary burr grinding method is depicted in Figure 44. The axis of the tool should be maintained at about 45 deg to the direction of travel. The depth of grinding must be a minimum of $^1/_{32}$ in. beneath the plate surface, and the maximum depth of grinding allowed is $^5/_{64}$ in. or 5 percent of the plate thickness, whichever is greater. The depth of $^1/_{32}$ in. was selected to give an adequate margin over the maximum observed depth of weld toe intrusions of $^1/_{64}$ in. The final surfaces should be clean, smooth, and free from all traces of undercut or slag.

Figure 45 shows the burr grinding operation on a tubular joint, and Figure 46 illustrates the final appearance of a burr ground joint.

DISC GRINDING

Equipment

The following items are required: (a) hand-held disc grinder, approximately 4,000 to 7,500 rev/min; (b) appropriate electricity or air supply; (c) grinding discs (the following have been found suitable: (i) 35–45 grit 4 in. diameter—use 7,500 rev/min, and (ii) 35–45 grit 7 in. diameter—use 4,000 rev/min)(note the disc thickness is not important because the corner of the disc is used); and (d) protective clothing (including leather jacket and gloves, face mask and goggles, and ear protection).

Figure 47 illustrates two typical disc grinders, with 4-in. and 7-in. diameter discs. For most applications the 4-in. diameter tool would be preferred because of its greater ease of handling and maneuverability.

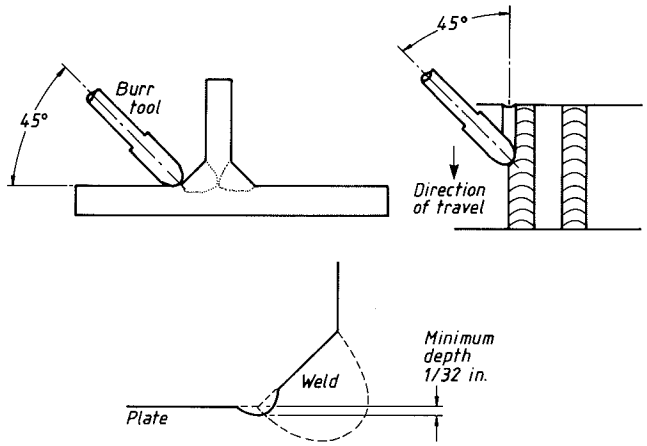

Figure 44. The method of burr grinding.

Figure 45. Burr grinding a tubular joint.

Method

The disc grinding method is shown in Figure 48. The disc should be inclined at between 30 deg and 45 deg to the parent plate. As for burr grinding, the depth of cut must be at least $^1/_{32}$ in. and the maximum depth allowed is $^5/_{64}$ in. or 5 percent of the plate thickness, whichever is greater. The final surfaces

Figure 46. Final appearance of a burr ground joint.

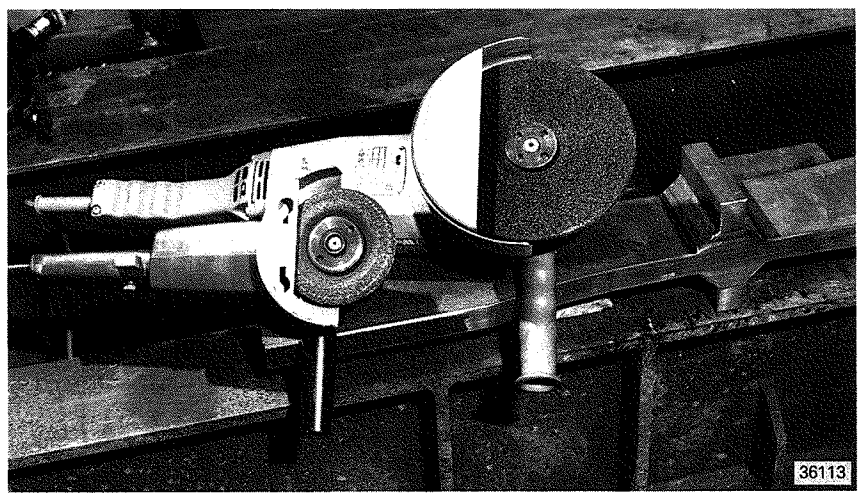

Figure 47. Two disc grinders 4-in. and 7-in. diameter.

should be free from all traces of slag or undercut. Severe, deep scratches parallel to the length of the weld should not be accepted.

The final appearance of the ground toe is shown in Figure 49. A section through a disc ground joint is presented in Figure 50, which again clearly emphasizes the depth of cut and the smooth transition obtained between the weld metal and parent plate.

PRACTICAL ASPECTS OF GRINDING

Assuming a typical duty cycle, experience has shown that the minimum rate of burr grinding achieved on mild steel, such as A36, is approximately 3 linear ft/hr (total time). When disc grinding, the rate is approximately doubled to 6 linear ft/hr (total time).

Each burr tool can be expected to treat a minimum 15 ft length of weld toe, whereas discs can be expected to grind very long lengths of weld without renewal. Burr grinding is approx-

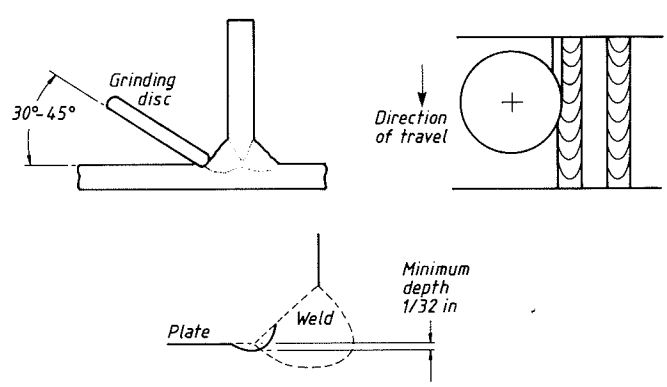

Figure 48. The method of disc grinding.

Figure 49. The appearance of a disc ground weld.

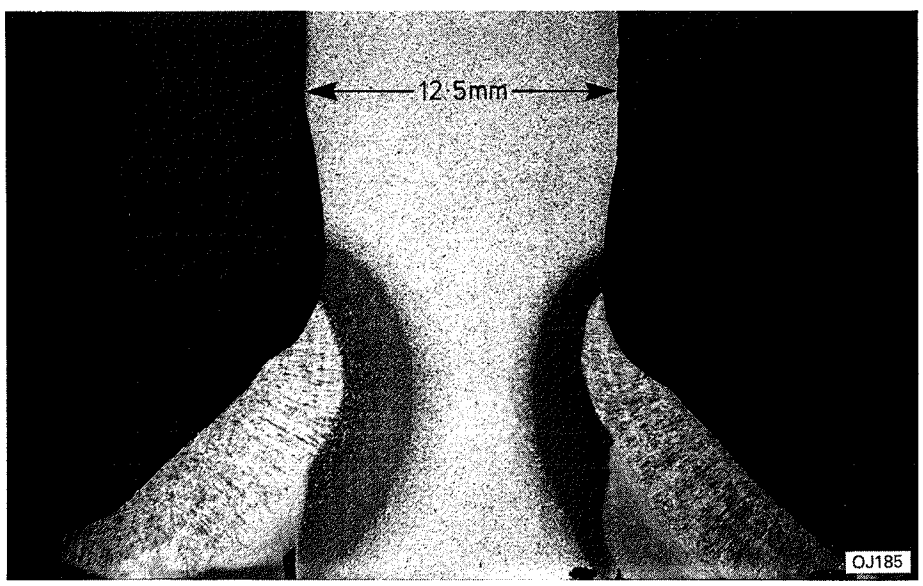

Figure 50. Section through a disc ground fillet weld in ½-in. thick plate; recommended depth of grinding 1/32-in. minimum below plate surface. Actual depth of grinding in this figure is approximately 0.028 in. each side, i.e., slightly less than recommended.

imately 2½ times as expensive as disc grinding, and only half as fast.

However, disc grinding suffers from two disadvantages that may make rotary burr grinding more attractive in some cases: (1) an inexperienced operator using a disc grinder may inadvertently remove too much material very quickly; and (2) the disc grinder is large and cumbersome and may be difficult to use in confined areas. In addition, it may not be possible to use disc grinding on certain joints where access to parts of the weld toe are restricted, such as cope holes.

For a relatively thin plate, the reduction in plate thickness arising from grinding may become significant. Therefore, grinding may not be suitable for joints in plates thinner than about 5/16 in., and other techniques, such as GTAW or plasma dressing, should be considered.

The benefit gained by grinding can only be claimed for joints in a corrosive environment if there is an adequate protection system. This is because an unprotected joint suffers corrosion attack which roughens the smooth ground surface, thus resulting in the loss of most of the beneficial effects of grinding.

Another factor which has to be considered is that the joints must be inspected after treatment to ensure that the grinding has been correctly performed. This quality control of the grinding operation should involve visual examination to ensure that the ground weld toes are free from any traces of undercut. In addition, the depth of grinding should be monitored using a suitable depth gauge to ensure that too much material is not being removed.

CHAPTER SIX

QUALIFICATION

GENERAL

When using arc welding in the fabrication or repair of bridges it is essential that the fabricator can demonstrate that the welding procedure used and the welder carrying out the work are capable of producing welds of the required quality.

A qualified welding procedure may be specified by standards or codes, such as AWS B2.1–84 Standard for Welding Procedure and Performance Qualification or ANSI/AWS D1.1–88 Structural Welding Code.

The qualified welding procedure has to meet the requirements of the relevant code of practice based on certain mechanical and nondestructive tests of weldments.

Qualified welding procedures are of two types: (1) procedures based on qualification tests independently verified; and (2) standard procedures that do not require further testing (prequalified welding procedures).

The ability of a welder to produce welds of acceptable quality is verified by performance qualification tests, and the qualification lasts indefinitely provided that the welder carries out similar work without interruptions of more than a certain period, the duration of which is specified by the code—6 months in the case of AWS D.1.1–88.

PROCEDURE QUALIFICATION

Before a repair weld is carried out the welding procedure must be qualified according to the requirements of the Structural Welding Code ANSI/AWS D.1–88. This will require welds to be made and tested according to the requirements laid down in the Structural Welding Code, unless the procedures are prequalified.

The Structural Welding Code specifies a wide range of both groove and fillet welds that can be used without welding procedure qualification tests. For example, the joints are considered to be prequalified and welding of a structure containing such joints can be carried out without any prior weld tests.

In the case of repair welding, some repair procedures may be considered to be prequalified. For example, the repair of cracks by cutting a hole and welding in a patch should not require weld procedure testing if standard groove dimensions are used. A fillet weld cracked through the throat could be gouged or ground out and replaced with sound weld metal by a qualified welder. However, in many cases the repair of cracks will involve nonstandard groove welds and, for repairs, some additional form of procedure qualification would be advisable over and above that required by the AWS Structural Welding Code.

Rehearsal of Repair Operation

This additional qualification should consist of a rehearsal of the repair with plates set up to simulate as far as possible the situation in practice. Obviously, in many cases it would be too time consuming and uneconomic to reproduce part of a complex structure for practice of a repair, but attention should be paid to the use of appropriate plate thickness and arrangement of the plates to reproduce the available access on the actual bridge.

Positions of cracks should be marked on the mock up and the welders should carry out removal and repair with any pre- and post-heat treatment required. A rehearsal will give some idea of the total time required for various stages of the operation so that an estimate can be made of any requirements for interruption of traffic on the bridge.

After repairs have been carried out during the above additional procedure qualification tests, the welds should be examined by nondestructive testing.

Procedure Qualification for Welding Fracture Critical Members

Rehearsal of the repair operation should be carried out as described above, and further qualification is also necessary.

If repair of fracture critical members is required, the mechanical properties of the weld metal must meet certain minimum requirements and it will be necessary to weld a separate test plate in the 1G (flat) position. The procedure qualification test plate for fracture critical members and details of the welding procedures are given in the 1987 interim revisions to the AASHTO *Guide Specifications for Fracture Critical Non-Redundant Steel Bridge Members* (1978).

This AASHTO publication specifies the minimum requirements for Charpy V-notch impact values. Tensile and bend test requirements are specified in the Structural Welding Code AWS D1.1.

Welding procedure qualification must comply with the provisions of Section 5 of AWS D1.1 except that qualification of

groove welding procedures depend on the use of the test plate or plates referred to above. Each fillet welding procedure must be qualified by T-test weldments in accord with AWS D1.1, 5.10.3 except that, in addition to the maximum size single pass test and the minimum size multiple pass test, a T-test weldment shall be produced to represent the minimum size, single pass fillet weld to be used in practice.

PERFORMANCE QUALIFICATION

All welders who carry out repair work should be qualified for shielded metal arc welding by means of qualification tests in accordance with the requirements of the Structural Welding Code ANSI/AWS D.1.1–88.

In addition to compliance with the requirements of the AWS Structural Welding Code, a welder engaged on bridge repair work should carry out, before each repair, a simulated repair operation on a mock-up, as described in the previous section on "Procedure Qualification."

CHAPTER SEVEN

NONDESTRUCTIVE EXAMINATION

ACCEPTANCE STANDARDS

The inspection of repair welds should be at least as thorough as that used when the bridge was fabricated, and the methods and extent of inspection should match those required if the bridge was to be built today. Before a weld is inspected it is necessary to know precisely the acceptance standard or, in other words, the level of quality required. Acceptance standards that are specified by codes, such as the AWS Structural Welding Code, specify the types of discontinuities that are prohibited and the sizes and distribution or extent of those that are permissible, and these criteria should be used for judging the quality of repair welds.

In many cases a fitness-for-purpose approach can be used when specifying the quality required for welded repairs. For example, if a fillet weld suffers from a fatigue failure through the throat of the weld, it was obviously too small and should be replaced by a larger weld, the size of which is obviously the most important feature to inspect. The repair of fatigue failures initiating at weld toes should be completed by grinding groove welds flush with the plate surface, and in the case of fillet welds a weld toe improvement technique by grinding should be used.

QUALITY OF REPAIR WELDS

Visual Inspection

Visual inspection is the most important method of examination and is applied to all repair welds, whatever other methods of inspection are used. Useful aids to visual inspection are a magnifying glass (10X magnification) and welding gages for measurement of fillet weld sizes, root openings, plate alignment, and so forth.

The inspector should be provided with full details of the welding repair procedure, with drawings or sketches, so that he can check compliance with all the requirements regarding depth and extent of excavations, dimensions of weld grooves, pre-heat and post-heat, type of welding electrodes, run-off tabs, welding sequence, as well as the quality required of the finished repair.

Visual inspection prior to welding should be carried out to check the following items:

1. Groove dimensions (length, depth, bevel angles, and root radii).
2. Cleanliness and surface finish of grooves.
3. Freedom from any remains of cracks or other discontinuities. This will require confirmation by dye penetrant or magnetic particle inspection.
4. Alignment and fit-up of insert plates or of plates that have been straightened.
5. Fit-up of backing plates.

Visual inspection during welding should be carried out to check the following items:

1. Preheat and interpass temperatures.
2. Welding sequence where there are multiple welds.
3. Electrode type and sizes.
4. Drying of electrodes.
5. Welding variables.
6. Details of grooves formed after the commencement of welding, i.e., cleanliness and dimensions.
7. Distortion.
8. Post weld heat treatment.

Visual inspection after welding should be carried out to check the following items:

1. Removal of backing and any temporary attachments with surface ground smooth.
2. Dimensional accuracy and alignment.

3. Size of fillet welds.
4. Profile of fillet welds.
5. Depth and surface finish of ground weld toes when fatigue life improvement techniques have been carried out.
6. Profile of groove welds when reinforcement has been ground flush with plate surface.
7. Depth of undercut when groove welds are not ground flush with plate surface or when fillet welds are not subject to weld toe grinding. Maximum undercut should be 0.032 in.
8. Freedom from cracks and other surface breaking defects.

Dye Penetrant Inspection

The dye penetrant inspection method is limited to the detection of discontinuities that are open to the surface, and it is the most convenient technique to extend the capabilities of visual inspection.

Penetrant tests should only be performed when the steel temperature is between 40°F and 110°F.

Testing Procedures. All testing should be carried out in accordance with ASTM Designation E165 Method B, Visible Solvent, Removal Penetrant. The surface being inspected should be cleaned in accordance with ASTM Designation E165. If surface irregularities interfere with the interpretation of test results, they should be removed by grinding.

Standards of Acceptance. Repair welds subject to dye penetrant inspection should be free from cracks and other surface breaking defects.

Magnetic Particle Inspection

The magnetic particle inspection method is used for detecting surface or near surface discontinuities in ferromagnetic materials including steel. It is a more searching method than dye penetrant inspection for the detection of small tightly closed cracks, but it is more time consuming and requires more skill in its application to ensure that spurious indications are not confused with genuine discontinuities.

Testing Procedure. Either the dry or wet magnetic particle technique may be used. The dry particle technique is not as sensitive as the wet technique for very fine and shallow cracks, but it is generally more suitable for field use and it is not as messy as the wet technique. Another advantage of dry powder is that it is not affected by cold or by heat up to temperatures of 600°F.

Magnetization of the part to be inspected should be carried out using either the prod or yoke technique as described in ASTM E709, Standard Recommended Practice for Magnetic Particle Examination.

Standards of Acceptance. Repair welds subject to magnetic particle inspection should be free from cracks and other surface breaking defects.

Radiographic and Ultrasonic Testing

The foregoing methods of visual inspection, supplemented by either dye penetrant or magnetic particle inspection, employed effectively will be sufficient to ensure that a welding repair does not contain any surface breaking defects. However, to ensure that internal discontinuities are within acceptable limits, it will be necessary to supplement these methods of nondestructive testing by ultrasonic or radiographic testing. In such cases, the procedures to be used and the acceptance standards should be those specified in the AWS Structural Welding Code D1.1–88.

Nondestructive testing personnel should have Level II qualifications as described in the American Society for Nondestructive Testing (ASNT) publication, *Recommended Practice Number SNT-TC-1A.*

CHAPTER EIGHT

CONCLUSIONS

The following general conclusions have been drawn from the findings of the major activities of this research:

1. Based on the results of the literature survey and interviews, it has been possible to categorize the various types of cracking known to occur in steel bridge structures, estimate their relative frequency of occurrence, and express an opinion on the suitability of welded repair. Table 8 summarizes these findings.

2. The primary cause of cracking in steel bridges is fatigue from welded joints, and a variety of joint types have been identified as likely sources of crack initiation. The predominant location of fatigue cracking was found to be welded stiffeners and other attachments on girder webs. Therefore, these areas should receive some degree of priority during in-service inspection so that fatigue cracks are detected before they reach a critical size.

3. The most important factor concerning repair of cracks in bridge members is that the cause of cracking may be poor detail design or poor welding and sometimes a combination of both. Details and conditions that cause fatigue crack initiation and growth will reinitiate cracks after welding repair as rapidly as the original cracks. Therefore, it is necessary to change the conditions that caused cracking in the first place. Welded repair alone may show little or no improvement in crack resistance, unless weld toe improvement techniques can be used to extend

Table 8. Type and frequency of cracking in steel bridges, and scope for welded repair.

Detail Type	Frequency of Occurrence*	Scope for Welded Repair**
1. FLANGES		
Flange Butts	1	3
Cover Plate Terminations	3	3
Cover Plate Butts	2	1
Flange Attachments	2	3
2. WEBS		
Web Butts	2	3
Misplaced Holes	2	3
3. WEB ATTACHMENTS		
Discontinuous Stiffeners	3	2
Stiffener Butts	2	3
Intersecting Stiffeners	2	3
Stiffener Attachments	3	2
4. INTERSECTING GIRDERS	3	2
5. BOX GIRDER CORNER WELDS	2	2
6. LAMELLAR TEARING	1	2
7. TACK WELDS	2	2
8. RIVET HOLES	1	1
9. ELECTROSLAG WELDS	2	1
10. EYEBARS	1	1
11. PIN PLATE LINKS	1	1

* 1. Rare
2. Occasional
3. Common

** 1. Little or none
2. Some
3. A lot

fatigue life. Weld toe improvement techniques alone may not be sufficient to increase service life and to be successful, a repair may need to incorporate a design modification, usually in the form of addition of load-carrying material.

4. The results of the fatigue tests carried out on test specimens in which fatigue cracks were repaired either in the welding laboratory or out of doors under conditions of restricted access showed that there was no deterioration in fatigue strength.

5. The majority of fatigue cracks in steel bridges should be capable of being successfully and economically repaired, completely or in part, by welding, provided that a good quality weld can be guaranteed. It is important to note that the suitability of repair welds is made under the assumption that the welds are sound, because the presence of defects in a weld can severely reduce its fatigue strength.

6. Fracture toughness testing indicated that repair welds can meet the relevant ASSHTO requirements for toughness, but in repairs of fracture critical joints the welding procedures should not always be considered to be prequalified, without a need for further mechanical testing.

BIBLIOGRAPHY

Anon., "Crack Growth in Highway Girder Bridges." *Metal Construction,* 10 (10) (Oct. 1978) pp.476–477.

BALL, J.G. and RAWLINGS, R.D., "Materials Aspects of Engineering Disasters." *Engineering,* 218 (12) (Dec. 1978) pp.1344–1346.

BENNETT, J.A. and MINDLIN, H., "Metallurgical Aspects of the Failure of the Point Pleasant Bridge." *ASTM J. Testing and Evaluation,* 1 (2) (Mar. 1973) pp.152–161.

BOOTH G.S., "Improving the fatigue strength of welded joints by grinding—techniques and benefits." *Welding Institute Report 268/1985* (Mar. 1985).

BURDEKIN, F.M., "The Investigation of Structural Failures in Steel Buildings, Cranes and Bridges." *J. Occupational Accidents,* 103 (3) (Sept. 1981) pp.163–175.

CHATTERJEE, S. and DAWE, P.H., "Fatigue Cracking in Two Steel Bridges [in the UK]." In *Fatigue of Steel and Concrete Structures, Proc.,* International Association for Bridge and Structural Engineering Colloquium, Lausanne, 23–26 Mar. 1982. IABSE Reports, 37. Publ: CH-8093, Zurich, Switzerland (1982) ISBN 3-85748-030-0, pp.525–534.

FISHER, J.W., "Fatigue and Fracture in Steel Bridges—Case Studies." Wiley Interscience, New York, N.Y. (1984) ISBN 0-471-80469-X.

FISHER, J. W., "Inspecting Steel Bridges for Fatigue Damage." Lehigh University, *Fritz Engineering Laboratory Report No.386-15 (81)* (Mar. 1981).

FISHER, J.W., BARTHELEMY, B.M., MERTZ, D.R., and EDINGER J.A., "Fatigue Behaviour of Full Scale Welded Bridge Attachments." *Final Report. 446-1 (80),* Lehigh University, Fritz Engineering Laboratory (1980) p.141.

FISHER, J.W. and HAUSAMMANN, H., "Detection and Repair of Fatigue Damage in Welded Highway Bridges." *NCHRP Report 206,* Transportation Research Board, Washington, D.C. (June 1979) 85 pp.

FISHER, J.W., HAUSAMMANN, H., and PENSE, A.W., "Fatigue and Fracture Analysis of Defects in a Tied Arch Bridge [in the USA]." In *Fatigue of Steel and Concrete Structures, Proc.,* International Association for Bridge and Structural Engineering Colloquium, Lausanne, 23–26 Mar. 1982. IABSE Reports, 37. Publ: CH-8098 Zurich, Switzerland (1982) ISBN 3-85748-030-0, pp.545–552.

FISHER, J.W., MERTZ, D.R., and WU, K.A., "Displacement Induced Fatigue Cracking of a Box Girder Bridge." In *Maintenance, Repair and Rehabilitation of Bridges, Proc.* International Association for Bridge and Structural Engineering Symposium, Washington D.C. 1982. IASBE Reports, 39.

Publ: Zurich, CH-8093, Zurich, Switzerland (1982) ISBN 3-85748-0351, pp.71–76.

FISHER, J.W., PENSE, A.W., and HAUSAMMANN, H., "Quinnipiac River Bridge Cracking." Lehigh University, Bethlehem, Pennsylvania, *ASCE J. Struct. Div.,* 106 (4) (Apr. 1980) pp.773–789.

FISHER, J.W., PENSE, A.W., and ROBERTS, R., "Cracking in Welded Steel Bridges."*Proc.,* International Conference, Atlanta 1982. American Welding Society (1982 Paper 10) pp.70–89.

FISHER, J.W., PENSE, A.W., and ROBERTS, R., "Evaluations of Fracture on Lafayette Street Bridge." Lehigh University, Bethlehem, Pennsylvania, *ASCE J. Struct Div.* 103 (7) (Jul. 1977) pp.1339–1357.

FISHER, J.W., PENSE, A.W., and ROBERTS, R., "The Failure of the Lafayette Street Bridge (St. Paul, Minnesota)—Influence of Design Details." *Proc.,* Conference, Prevention of Structural Failures—The Role of NDT, Fracture Mechanics and Failure Analysis, Tarpon Springs, Fla., 14–16 June 1976 and 19–22 June 1977, American Society for Metals (1978) pp.3–28.

FISHER, J.W., SLOCKBOWER, R.E., and HAUSAMMANN, H., "Long Time Observation of a Fatigue Damaged Bridge." Lehigh University, Bethlehem, Pa., *J. Tech. Council ASCE,* 107 (1) (Apr. 1981) pp.55–71.

FISHER, J.W., YEN, B.T., and FRANK, K.H., "Minimizing Fatigue and Fracture in Steel Bridges." *Proc.,* Conference Washington 1979. American Society of Mechanical Engineers (1979) pp.155–161. Also in *Trans. ASME J. Engineering Materials and Technology* (1980) pp.20–25.

HANDEL, W. and MUNSE, W.H., "Investigation of an Interstate 57 Bridge Beam Brittle Fracture." *SRS Series No.477,* University of Illinois (Mar. 1980).

HARTBOWER, C.E. and SUNBURY, R.D., "Variability of Fracture Toughness in A514/517 Plate." In *Proc.,*Symposium, "What Does the Charpy Test Really Tell Us? ". Denver, 27–28 Feb. 1978, American Society for Metals (1978) pp.151–171.

HORIKAWA, K., SUZUKI, H., and IMI, K., "Repair Welding on Bridges in Service Condition." *Transaction of JWRI,* 12 (2) (Dec. 1983) pp.309–315.

"Improving the Fatigue Performance of Welded Joints." The Welding Institute, Abington Hall, Abington, Cambridge, CB1 6AL, (1983).

"Inspection of Steel Bridges for Fatigue Damage." *ASCE J. Struct. Div.,* 97 (STB) (Aug. 1971, Paper 8321) pp.2107–18.

INTERNATIONAL INSTITUTE OF WELDING. "Inquiry on Fatigue Failures—Crack Growth in Highway Bridge Girder." *Welding in the World,* 16 (9/10) (1978) pp.172–177.

KOZULIN, M.G., MOSHNIKOW, V.S., FIL CHENKOV, D.I., and VOLKOVA, A.P., "The Multiple Repair of Welded Joints in Low Carbon Steels." *Welding Production,* 24 (6) (June 1977) pp.52–54.

NEW CIVIL ENGINEER, "Severn Report Lists Wide Ranging Weaknesses. . .As Doubt is Cast on Other Long Bridges." *New Civil Engineer,* no.517 (18 Nov. 1982) pp.4–5.

OGLE, M.H., "Repair of a Steel Viaduct." *Welding Institute Research Bulletin, 26* (Apr. 1985) pp.118–126.

PENSE, H.W., DIHS, R., and FISHER, J.W., "Examination and Repair of Bridge Structures." *Welding J.,* 63 (4) (Apr. 1984) pp.19–25.

PENSE, A.W., WOOD, J.D., and FISHER, J.W., "Recent Experiences with Electroslag Welded Bridges." *Welding J.,* 60 (12) (Dec. 1981) pp.33–42.

REEMSNYDER, H.S., "Fatigue Life Extension of Rivetted Connections." Bethlehem Steel Corp., Bethlehem, Pa., *ASCE J. Struct. Div.,* 101 (12) (Dec. 1975) pp.2591–2608.

REEMSNYDER, H.S. and DEMO, D.A., "Fatigue Cracking in Welded Crane Runway Girders—Causes and Repair Procedures." *Iron and Steel Engineer,* 55 (4), pp.52–56.

"Reports on Brittle Fractures : Main Girder of a Bridge." *Welding in the World,* 7 (1) (Spring 1969) pp.54–59.

ROBERTS, R., "Fracture Design for Structural Steels." *Application of Fracture Mechanics to Design, Proc.,* 22nd Sagamore Army Materials Research Conference, Raquette Lake, N.Y., Aug. 1985. J.J. Burke and V. Weiss (eds), Plenum Press, (1979) ISBN 0-306-40040-5.

SCHEFFEY, C.F., 'Point Pleasant Bridge Collapse." Federal Highway Administration, Washington D.C., *Civ. Eng.,* 41 (7) (Jul. 1971) pp.41–5.

SHANAFELT, G.O. and HORN, W.B., "Guidelines for Evaluation and Repair of Damaged Steel Bridge Members." *NCHRP Report 271* (June 1984) 64 pp.

SHI, Y., YANG, Y. and CHEN, Z., "Fatigue failures of Steel Railway Bridges in China." In *Fatigue of Steel and Concrete Structures, Proc.,* International Association for Bridge and Structural Engineering Colloquium, Lausanne, 23–26 Mar. 1982. IABSE Reports, 37. Publ: CH-8092, Zurich, Switzerland (1982) ISBN 3-85748-030-0, pp.517–524.

SWEENEY, R.A.P., "Some Examples of Detection and Repair of Fatigue Damage in Railway Bridge Members." Transportation Research Board, *Transportation Research Record 676* (1978) pp.8–14.

TOKUZAWA, N. and HORIKAWA, K., "Mechanical Behaviour of Structural Members Welded Under Loading." *Transactions of JWRI,* 10 (1) (Mar. 1981) pp.95–101.

APPENDIXES A AND B

UNPUBLISHED MATERIAL

Appendix A *Literature Survey* and Appendix B *Experimental Work* contained in the report as submitted by the research agency are not published herein. Their contents are listed here for the convenience of those interested in the subject area. Qualified researchers may obtain loan copies, or microfiche may be purchased, of the agency final report by written request to the NCHRP.

APPENDIX A CONTENTS—LITERATURE SURVEY

- Bridge Failures and Crack Locations
- Repair Methods
- Repair Welding Under Load
- Crack Detection

APPENDIX B CONTENTS—EXPERIMENTAL WORK