Thermal Transfer of Liquid in Porous Media

A. M. GLOBUS and B. M. MOGILEVSKY
Agrophysical Institute, Leningrad

The time rates of thermal transfer of H_2O, C_2H_5OH, C_6H_6, CCl_4, and dibutyl phthalate ($C_{16}H_{22}O_4$) were measured at early stages of experiments with closed columns of two unsaturated porous ceramics—crushed ceramsite and crushed firebrick. The measured fluxes were shown to be higher than the calculated vapor diffusion fluxes in all cases except dibutyl phthalate, whose thermal transfer was not detected.

The differences between these values do not follow the sequence of thermo-capillary film fluxes which can be induced by surface tension gradients along the air-liquid interface. Thus thermo-capillary film flow does not play an essential role in thermal mass transfer under the conditions investigated.

The analysis of the two other possible mechanisms of thermal liquid transfer—thermo-self-diffusion and thermo-osmosis in a single capillary filled with one-component polar liquid—was accomplished on the basis of irreversible thermodynamics and kinetic theory of liquids. This analysis resulted in the expression for the steady pressure difference between the ends of a non-isothermal capillary.

•IN MANY papers reviewed by Globus (6), the time rate of thermal water transfer (TWT) in unsaturated porous media was shown to be significantly higher than vapor diffusion flux calculated according to Fick's law, with allowance for temperature-dependence of vapor pressure and diffusivity, tortuosity factor, and water-free porosity (16). Generally speaking, this is not surprising because of the existence of several mechanisms actuating thermal liquid transfer. Among these mechanisms are thermo-capillary meniscus flow due to the difference of Laplace pressure induced by temperature gradient, thermo-capillary film flow (4) due to surface tension gradients along air-liquid interface, thermo-osmosis (3, 17), and thermo-self-diffusion (1). Relative parts played by these processes in TWT are not clear, although analysis has shown (6) that thermo-capillary meniscus flow cannot explain relationships of TWT in different porous media observed experimentally.

In this paper we attempt to estimate the role of thermo-capillary film flow in TWT and discuss thermo-osmosis and thermo-self-diffusion.

THERMAL MASS TRANSFER FLUXES: TOTAL MEASURED FLUX, CALCULATED THERMAL VAPOR DIFFUSION, AND THERMO-CAPILLARY FILM FLUXES

One-dimensional thermo-capillary film flow of a liquid in porous media is described by (4)

$$q_{tf} = -\frac{\rho h^2}{2\eta}\frac{2}{3} S \frac{d\sigma}{dx} = -\frac{1}{3}\frac{\rho}{\eta}\frac{W^2}{S}\frac{\partial\sigma}{\partial T}\frac{dT}{dx} \qquad (1)$$

Here q_{tf} = time rate of thermo-capillary film flow in g/cm^2/sec; η = viscosity in g/cm/sec; h = W/S = thickness of liquid film in cm; S = specific surface in cm^2/cm^3; W = moisture content on volume basis in cm^3/cm^3; T = temperature in deg C; σ = surface tension in dynes/cm; ρ = density of liquid in g/cm; and x = coordinate in cm.

TABLE 1

SOME PROPERTIES OF CERAMICS USED

Medium	Diameter of Particles, mm	Apparent Density, g/cm^3	Specific Surface, cm^2/cm^3	Moisture-Free Porosity in Experiments cm^3/cm^3
Crushed ceramsite (CC)	0.5-1.0	0.60	12,400	0.71
Crushed firebrick (CB)	0.5-1.0	0.63	3,300	0.70

The temperature gradient-dependent vapor diffusion in a material, where vapor pressure is near saturation (closed system), can be described approximately by the equation

$$q_{tv} = -\alpha C D_a \frac{P}{P-p} \frac{\partial c}{\partial T} \frac{dT}{dx} \tag{2}$$

where q_{tv} = time rate of temperature gradient-dependent vapor diffusion in $g/cm^2/sec$; α = tortuosity factor ($\approx$ 0.66) (12); C = liquid-free porosity in cm^3/cm^3; D_a = diffusivity of vapor in air in cm^2/sec; P = barometric pressure in mm Hg; p = saturated vapor pressure in mm Hg; and c = vapor concentration in g/cm^3.

It is evident that, for a given W (and consequently h and C) of a porous medium and equal temperature conditions, the magnitude of thermo-capillary film flow is proportional to

$$\zeta = \frac{\rho}{\eta} \frac{\partial \sigma}{\partial T}$$

and the magnitude of temperature gradient-dependent vapor diffusion relates linearly to

$$\xi = \frac{D_a}{P-p} \frac{\partial c}{\partial T}$$

Choosing substances whose ζ and ξ form different sequences and comparing calculated fluxes with the observed ones, it is possible to attempt to determine if any particular mechanism dominates in each case.

Here the results are reported concerning thermal transfer of H_2O, C_2H_5OH, C_6H_6, CCl_4 and dibutyl phthalate ($C_{16}H_{22}O_4$) in two model porous ceramic media—crushed ceramsite (CC) and crushed firebrick (CB)—investigated earlier (7).

EXPERIMENTAL

Some properties of the porous media are given in Table 1 and properties of fluid substances appropriate to their vapor and liquid transfer are given in Table 2.

TABLE 2

CHARACTERISTICS OF H_2O, C_2H_5OH, C_6H_6, CCl_4, AND $C_{16}H_{22}O_4$ INFLUENCING THEIR VAPOR DIFFUSION AND THERMO-CAPILLARY FLOW

Substance	η, g/cm/sec	ρ, g/cm^3	$\partial\sigma/\partial T$, dynes/cm/deg C	$\frac{\rho}{\eta}\frac{\partial\sigma}{\partial T}$ $\times 10^2$	P, mm Hg	D_σ, cm^2/sec	$\partial c/\partial T$, g/cm^3 C	$\frac{DP}{P-p}\frac{\partial c}{\partial T}$ $\times 10^7$
H_2O	0.86	1.00	0.157	18.2	27	0.27	0.13	3.62
C_2H_5OH	1.06	0.79	0.091	6.8	68	0.12	0.82	10.8
C_6H_6	0.58	0.88	0.137	20.7	105	0.09	2.06	21.5
CCl_4	0.88	1.61	0.110	20.1	131	0.09	3.60	38.9
$C_{16}H_{22}O_4$	20.0	1.05	–	–	1×10^{-4}	–		1×10^{-5}

No values of the surface tension-temperature relationship and of the vapor diffusivity of dibutyl phthalate are at our disposal, and thus no calculations have been made for this substance. However, it was felt that, because of the negligible vapor pressure, its thermal mass transfer (TMT), if it exists, can be ascribed to the liquid flow.

Experimental determinations of TMT time rates were accomplished following the method described earlier (6) for a temperature difference of 22-32 C and a steady temperature gradient of $1.\overline{0}$ C/cm.

Observations on the TMT kinetics in the closed horizontal cylindrical columns used in the experiments have shown that, in some range of initial moisture content W_i, the gradient of W in the middle section of a column is negligibly small at an early stage of the experiment. Transferred mass quantity increases nearly linearly with time during that period of a run. Because of constancy of W, T, and dT/dx, a mean time rate during this stage of the experiment may be taken as a true time rate of TMT at first approximation and used for comparison between the fluxes of different substances.

The TMT fluxes of H_2O, C_2H_5OH, C_6H_6, and CCl_4 were determined experimentally for a W_i of 6-8 percent. The values obtained were compared with those calculated according to Eqs. 1 and 2. When using these equations one needs to introduce some approximations. Thus, when calculating h, the authors of Eq. 1 supposed all the liquid to be distributed uniformly on the surface of solid particles. However, actually a part of the liquid is in wedges around the contacts of particles and it is impossible to compute a share of film moisture for non-ideal systems. The use of the supposition mentioned leads to overestimation of h and q_{tf}. A part of the film adjacent to the solid surface is probably more viscous than the bulk liquid, which also induces overestimation of q_{tf}. Due to a deviation of actual film surface from the direction of temperature gradient, the effective value of the latter is smaller than the overall gradient entering the equation. Further, Eq. 1 must include only the available surface, not the total surface, as a path for the liquid flow. However, we do not know any reliable method for its estimation for the media as used. In our calculations we used total specific surface measured by adsorption of water vapor (10). For h determined independently of S it leads to overestimation of q_{tf}, but for the adopted method it may cause some underestimation of q_{tf}, which probably is outweighed by the former factors. But since the initial moisture contents for all the liquids were made equal, the computed values of q_{tf} can be compared among themselves even though their absolute magnitudes are not true. Doing so, we suppose the differences in distribution of each liquid between film and wedges and in the thickness of immovable film to be insignificant.

When using Eq. 2, we accounted for the presence of dead-end pores in CC by introducing a factor calculated with the help of diffusivities of CO_2 measured experimentally.

RESULTS AND DISCUSSION

In Table 3 the time rates of TMT observed for the substances studied (q_e) are given along with those calculated according to Eqs. 1 and 2. Figure 1 shows net TMT in the closed systems as a function of W_i.

We could detect no measurable TMT of dibutyl phthalate even in very long runs (10 days).

As can be seen from Table 3, thermal transfer rates larger than those calculated according to Fick's law are appropriate not only to water but to all the substances transferred. When written in the order of their magnitudes, the values of observed TMT fluxes form a sequence similar to that of their fluxes computed according to Eq. 2, i.e., temperature gradient-dependent vapor diffusion. The ratios q_e/q_{tv} are not constant, however, and tend to decrease with the increase of q_{tv}. It may partially be explained by the fact that larger values of q_e relate to the substances whose vapor pressures in experiments could be somewhat lower than the saturated pressure. Nevertheless it is reasonable to suppose that if the excess of q_e over q_{tv} were caused by the existence of thermo-capillary film flow, the differences (q_e - q_{tv}) for all the substances should form the same sequence as the values of q_{tf} for these substances.

As Table 3 shows, this is not the case. This may be interpreted as evidence of an insignificant part played by the thermo-capillary film flow in TMT under the conditions

TABLE 3

COMPARISON BETWEEN OBSERVED (q_e) AND COMPUTED TIME RATES OF THERMAL TRANSFER OF H_2O, C_2H_5OH, C_6H_6, AND CCl_4 IN CRUSHED CERAMSITE AND CRUSHED FIREBRICK

(dT/dx = 1.0 C/cm, T = 22-32 C)

Substance	q gm/cm²/sec × 10⁶								q_e/q_{tv}		$(q_e - q_{tv}) \times 10^6$	
	Crushed Ceramsite (CC)				Crushed Firebrick (CB)							
	Eq. 1	Eq. 2	Eqs. 1 + 2	Experimental	Eq. 1	Eq. 2	Eqs. 1 + 2	Experimental	CC	CB	CC	CB
H_2O	3.14	0.14	3.28	0.70	8.18	0.18	8.36	0.89	5.0	4.9	0.56	0.71
C_2H_5OH	1.17	0.36	1.53	0.94	3.04	0.47	3.51	1.20	2.6	2.6	0.58	0.73
C_6H_6	3.56	0.75	4.31	1.27	9.29	0.98	10.27	1.76	1.7	1.8	0.52	0.78
CCl_4	3.44	1.34	4.78	1.98	9.02	1.77	10.79	3.03	1.5	1.7	0.64	1.20

of the experiment. Net TMT in closed systems depending on the ratio of thermal isothermal permeabilities of a medium increases with

$$\xi = \frac{Da}{P - p} \frac{dc}{dT}$$

and so does the range of W_i where net TMT occurs. The results suggest that, under the conditions studied (low to medium moisture content, low specific surface), vapor diffusion, probably with vapor-liquid interaction (13), is an essential element of processes which secure increased time rate of TMT, and that thermo-capillary liquid flow exerts little, if any, influence on the process investigated.

It should be noted that ratios q_e/q_{tv} are greater for H_2O and C_2H_5OH, both substances having molecules of high polarity. This property influences the degree of orientation of the liquid layer adjacent to the solid surface and thermodynamic characteristics of these layers may favor thermo-osmotic liquid flow (3).

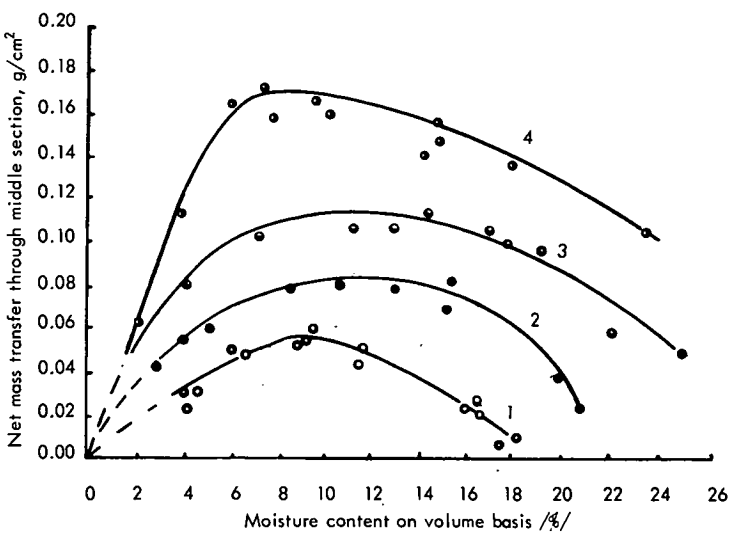

Figure 1. Net thermal transfer of several substances in granular porous ceramic (crushed firebrick): 1—H_2O, 2—C_2H_5OH, 3—C_6H_6, 4—CCl_4.

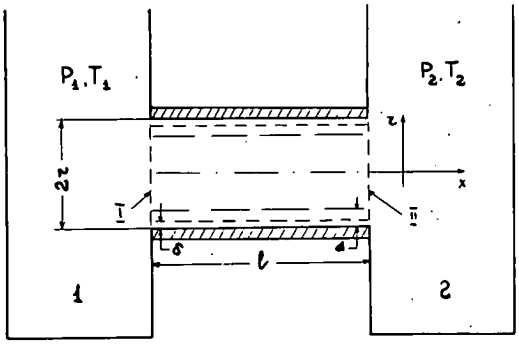

Figure 2. Capillary model.

THERMO-SELF-DIFFUSION AND THERMO-OSMOSIS OF LIQUID

In the second part of this paper we consider the thermo-osmosis and thermo-self-diffusion of liquids as probable mechanisms of TMT in porous media.

Here we consider thermo-osmosis (3) and thermo-self-diffusion in a model capillary system comprising (Fig. 2) a cylindrical capillary filled with one-component liquid and placed between two vessels, 1 and 2, where pressure P and absolute temperature T are different. In our discussion we will use the "hole theory" of liquids (5). From the point of view of this theory a liquid flow through the capillary along which there is a steady temperature field includes "molecular" (diffusion) and "bulk" components.

"Molecular" flow is due to translocations of molecules caused by the gradient of chemical potential and temperature. Considering these translocations as discrete jumps of molecules or their associates (coordinated groups) in adjacent "holes," the molecular components of the flux may be expressed with the help of the well-known equation of irreversible thermodynamics (8):

$$j_M = L_M \left(X_M + Q_M^* X_q \right) \tag{3}$$

Here L_M = the phenomenological coefficient; Q_M^* = heat of transfer of liquid per particle, which is equal to the translation movement activation energy of molecules of a liquid; and X_M and X_q = thermodynamic forces:

$$X_M = - \frac{[\text{grad } \mu]_T}{T}$$

$$X_q = - \frac{\text{grad } T}{T^2}$$

where μ_M = the chemical potential of particles of a liquid.

The "bulk" component of the flux is a well-correlated movement of particles due to the external force field. This flux is equal to

$$j_B = n_M \, u\,[r]$$

where u[r] = the radial distance-dependent velocity of liquid flow due to the pressure gradient, grad p; this velocity can be determined from the equation

$$\eta \text{ div grad } u[r] = \text{grad } p \tag{4}$$

and where n_M = concentration of particles of a liquid per unit volume and η = viscosity of a liquid. Thus, total flux is $j = j_M + j_B$, and total flow $I = I_M + I_B$ is found by integration over the section area of a capillary.

Let us consider now the influence of interaction between the liquid and capillary walls on the molecular components of mass flow. In general, energy characteristics of particles of a liquid are modified owing to such an interaction. The interaction forces weaken rapidly with the distance from the wall; thus, changed properties are appropriate to a thin layer of thickness d adjacent to the wall.

Molecular transfer of a liquid can take place both in the bulk and in the boundary layer d. Consequently, I_M may be represented approximately (taking into account the

absence of distinct boundary) as a sum of two components: one characterizing the flow in the boundary layer and the other describing the flow in the remaining volume.

Now we define Eq. 3 with the help of grad p_c and grad T only, considering μ as a function p, T, and n_h where n_h = volume concentration of holes defined in its turn by the local values of p and T. Here the pressure gradient in a capillary, grad p_c, does not equal $(P_1 - P_2)/l$ (where l = length of a capillary) because of a pressure jump in boundary zones 1 and 2 (Fig. 2) occurring due to the modified energy characteristics of a liquid in the near-wall boundary layer. We assume zones 1 and 2 degrade to flat surfaces separating a capillary from vessels 1 and 2.

At surfaces 1 and 2 the condition of equality of the particles' chemical potentials in the capillary and outer volumes is satisfied. Meantime the chemical potential in the vessels, μ_V, is defined by temperature and pressure only, whereas in a capillary the particles' chemical potential, μ_c, depends on the distance from the wall (R-r) as well.

Let us find $(p_{2c} - p_{1c})$, supposing the pressure difference to be small and using expansion of μ about P_1:

$$\text{grad } p_c = \text{grad } p + \frac{S[r]}{v_b} \text{grad } T \tag{5}$$

where $S[r] = S_c[P_1, r] - S_b[P_1]$; S = entropy; and v_b = specific volume (per particle).

Further, using grad p_c from Eq. 5, the total molecular flow, $I_M = I_M^b + I_M^d$, is

$$I_M = -\sigma_{MP} \text{ grad } p - \sigma_{MT} \text{ grad } T \tag{6}$$

$$\sigma_{MP} = -\pi R^2 D_b \left(\frac{\partial \mu}{\partial n_h}\right)^{-1} \Psi_{MP}^b + 2\frac{d}{R}\xi\left(\frac{\partial \mu}{\partial n_h}\right)^{-1} \Psi_{MP}^d \tag{7}$$

$$\sigma_{MT} = -\pi R^2 D_b \left[\left(\frac{\partial \mu}{\partial n_h}\right)^{-1}\left(\frac{Q_b^*}{T} + f_T^b\right) + 2\frac{d}{R}\xi\left(\frac{\partial \mu}{\partial n_h}\right)^{-1}\left(\frac{Q_h^*}{T} + f_T^d\right)\right] \tag{8}$$

where $f_T^{b,d} = \frac{\partial \mu}{\partial n_h}\frac{\partial n_h}{\partial T} + \frac{\overline{\Delta S}}{v_b}\frac{\partial \mu}{\partial n_h}\frac{\partial n_h}{\partial p} + \frac{\overline{\Delta S}}{v_b}\frac{\partial \mu}{\partial p}$; $\xi = \frac{D_d}{D_b}$; and

$$\Psi_{MP}^{b,d} = \frac{\partial \mu}{\partial n_h}\frac{\partial n_h}{\partial p} + \frac{\partial \mu}{\partial p}$$

The first term in parentheses in Eqs. 7 and 8 was deduced as a sequence if averaging over the volume of a capillary; the second term is due to averaging over the layer d and, on the basis of the kinetic theory of liquid, the transition was accomplished from L to self-diffusivity D.

Now let us consider the bulk component of the total liquid flow in a capillary,

$$I_B = \frac{-2\pi}{v_b}\int_0^R u[r]\,dr$$

The value of u can be deduced from Eq. 4 using grad p_c from Eq. 5. The first term in the right part of Eq. 5 depends only upon P, the second one upon T; thus the total flow I_B can be split into two components:

$$I_B = I_B^P + I_B^T$$

where I_B^P = Poiseuille's flow due to the pressure difference, and I_B^T = thermo-osmotic flow due to the difference in thermodynamic properties:

$$I_B^P = -\sigma_{BP} \text{ grad } p$$
$$\sigma_{BP} = \frac{\pi R^4}{8 v_b \eta} \tag{9}$$

The component I_B^T depends upon grad T and is defined by the actual form of the relationship of $\Delta S[r]$:

$$I_B^T = -\sigma_{BT} \text{ grad } T \tag{10}$$

$$\sigma_{MT} = \frac{2\pi}{\eta v_b^2} \int_0^R r dr \int_0^R \frac{dr'}{r'} \int_0^{r'} \Delta S[r''] \, r'' \, dr'' \tag{11}$$

Considering μ = constant in the section perpendicular to capillary axis, we write

$$S[r] = \frac{\Delta h[r]}{T} \tag{12}$$

where $\Delta h[r]$ = difference of enthalpy for particles situated at (R - r) distance from the wall and particles which are sufficiently far from the layer d.

If the interaction potential changes with the distance from the wall according to $(R - r)^{-m}$, then (5)

$$\Delta h[r] = \frac{\gamma}{(R - r)^{m-3}} \tag{13}$$

Here $\gamma = \gamma_{1,2} - \gamma_{2,2}$, where γ is the force constant of the particles' interaction; $\gamma_{1,2}$ characterizes the interaction between particles of the liquid and the capillary wall, and $\gamma_{2,2}$ is the interaction between the particles themselves (we suppose the distance dependence of the particles' potential to be the same for both interactions). The maximum τ is equal to $(R - \delta)$, where δ is the minimum interparticle distance, i.e.,

$$(\Delta h)_{max} = -\frac{\gamma}{\delta^{m-3}}$$

Using Eq. 13 in Eq. 12 and inserting the result into Eq. 11, we obtain, after integration up to $(R - \delta)$ (instead of R), when neglecting terms that depend upon δ^3 and its higher powers,

$$\sigma_{BT} = \frac{\pi R^2 \delta^2 (\Delta h)_{max}}{(m - 4)(m - 5) v_b^2 \eta T} \tag{14}$$

Thus, the total flow through the capillary is

$$I = I_M + I_B = -\left(\sigma_{MP} + \sigma_{BP}\right) \text{grad } p - \left(\sigma_{MT} + \sigma_{BT}\right) \text{grad } T$$

At steady state, when I = 0, grad p and grad T are related as follows:

$$\frac{\text{grad } p}{\text{grad } T} = -\mathcal{L}$$

$$\mathcal{L} = \frac{\sigma_{MT} + \sigma_{BT}}{\sigma_{MP} + \sigma_{BP}} \tag{15}$$

Supposing each of $\frac{\partial \mu}{\partial n_h}$, $\frac{\partial n_h}{\partial T}$ and $\frac{\partial n_h}{\partial p}$ in the capillary volume to be negligibly small and adding Eqs. 7 ÷ 9 and 8 ÷ 14, we arrive at

$$\sigma_{MT} + \sigma_{BT} = -\pi R^2 k D_b \left(\frac{\partial \mu}{\partial n_b}\right)^{-1} \left[\frac{Q_e^*}{kT} - M\left(\frac{-(\Delta h)_{max}}{kT}\right)\right] \tag{16}$$

where introduction of the Boltzmann constant, k, reduces the term in brackets to a dimensionless one.

Further,

$$\sigma_{MP} + \sigma_{BP} = -\pi R^2 v_b D_b \left(\frac{\partial \mu}{\partial n_h}\right)^{-1} [1 + 2(d/R)\,\xi + N] \tag{17}$$

$$\mathcal{L} = -k/v_b \frac{\frac{Q^*}{kT} - M\left[\frac{-(\Delta h)_{max}}{kT}\right]}{1 + 2(d/R)\,\xi + N} \tag{18}$$

$$N = -\frac{R^2}{8\, v_b D_b\, \eta} \frac{\partial \mu}{\partial n_h} \tag{19}$$

$$M = \frac{T}{(\Delta h)_{max}} \frac{\partial \mu}{\partial n_h} [1 + 2(d/R)\,\xi] + \frac{\Delta S_b}{(\Delta S_b)_{max}} + 2(d/R)\,\xi \frac{\Delta S_h}{(\Delta S_h)_{max}}$$

$$+ \frac{8\delta^2 N}{(m-4)(m-5) R^2} \tag{20}$$

$$Q_e^* = Q_b^* + 2(d/R)\,\xi\, Q_d^*$$

Supposing $n_M >> n_h$, we get

$$\Psi_{MP} = \frac{\partial \mu}{\partial n_h} \frac{\partial n_h}{\partial p} + \frac{\partial \mu}{\partial p} = v_b \tag{21}$$

Using the power relation of the type in Eq. 13 gives

$$\frac{\overline{\Delta S}_b}{(\Delta S)_{max}} = \frac{2}{(m-4)}\, d/R$$

$$\frac{\overline{\Delta S}_h}{(\Delta S)_{max}} = \frac{1}{(m-4)}\, \delta/d \left[1 - (\delta/d)^{m-4}\right]$$

Let us estimate $\frac{\partial \mu}{\partial n_h}$, $\frac{\partial n_h}{\partial T}$, $\frac{\partial \mu}{\partial p}$, $\frac{\partial \mu_h}{\partial p}$. Considering a liquid as a mixture of particles

of the liquid and holes we write Gibbs' free energy for liquid:

$$G = n_M g_M + n_h g_h - kT \ln \frac{(n_M + n_h)!}{n_M!\, n_h!} \tag{22}$$

where g_h = free energy of the hole.

From Eq. 22 we obtain

$$\mu_M = \frac{\partial G}{\partial n_M} = g_M + kT \ln \frac{n_M}{n_M + n_h} \tag{23}$$

$$\mu_h = \frac{\partial G}{\partial n_h} = g_h + kT \ln \frac{n_h}{n_M + n_h} \tag{24}$$

If in every microzone (in the sense of thermodynamics) there is local equilibrium in relation to the number of holes, then Eq. 22 leads to

$$n_h = \left(n_M + n_h\right) \exp\left(\frac{-g_h}{kT}\right) \tag{25}$$

$$\frac{\partial n_h}{\partial p} = -\frac{n_h v_h}{kT}$$

$$\frac{\partial n_h}{\partial T} = \frac{n_h h_h}{kT^2}$$

Here v_h is the volume of a hole, h_h is the enthalpy of the creation of a hole, and $\frac{\partial \mu}{\partial p} = v_M$ is the volume of a particle of the liquid. Then from Eq. 21,

$$\frac{\partial h}{\partial n_h} = -\frac{v_b - v_M}{v_h n_h} = -v_b kT$$

If we ascribe all the changes of the volume depending upon the changes of pressure and the temperature to the change of number of holes, then

$$dn_h = \frac{dv_b}{v_h v_b}$$

$$\frac{\partial n_h}{\partial T} = \frac{1}{v_h v_b} \frac{\partial v_b}{\partial T} = \frac{\alpha}{v_h}$$

$$\frac{\partial n_h}{\partial p} = \frac{1}{v_h v_b} \frac{\partial v_b}{\partial p} = -\frac{\beta}{v_h}$$

where α is the thermal coefficient of volume expansion, and β is the compressibility. Thus,

$$\frac{\partial \mu}{\partial n_h} \frac{\partial n_h}{\partial T} = -k\, \alpha\, T \frac{v_b}{v_h}$$

It is known (5) that $h_h = kT$ and consequently

$$\frac{\dfrac{\partial n_h}{\partial p}}{\dfrac{\partial n_h}{\partial T}} = -\frac{\beta}{\alpha} = -\frac{\upsilon_h}{\varkappa}$$

$$v_h = (\beta/\alpha)k$$

$$\frac{\partial \mu}{\partial n_h}\frac{\partial n_h}{\partial T} = -T\frac{\alpha^2}{\beta}v_b$$

It is possible to write

$$N = \frac{R^2 kT}{8\, v_b D_b\, \eta} \tag{26}$$

instead of Eq. 19. Neglecting terms of order $(d/R)^3$, $(\delta/R)^3$, and higher, we have instead of Eq. 20,

$$M = \left[\frac{kT}{-(\Delta h)_{max}}\right]\frac{\alpha^2 v_b T}{k\beta} + A\,N \tag{27}$$

where

$$A = \frac{8\delta^2}{(m-4)\,(m-5)R^2}$$

in the case of Eq. 13 and

$$A = 4\, d^2/R^2$$

if we consider h as a constant in the layer d, h having the value appropriate to the bulk liquid beyond this layer. Since $N >> 1$ for the majority of liquids at normal temperatures and $R \geq 10^{-6}$ cm, we can finally rewrite Eq. 18

$$\mathcal{L} = \frac{8D_b\eta}{R^2 T}\left\{\frac{Q_e^*}{kT} - M\left[\frac{-(\Delta h)_{max}}{kT}\right]\right\} \tag{28}$$

The value of $(\Delta h)_{max}$ can be estimated from the condition

$$\int_{\delta}^{\infty} \Delta h\, n_M\, dx \approx \theta \tag{29}$$

where $\theta = \theta_{la} + \theta_{ls} - \theta_{sa}$; θ_{la} and θ_{sa} are the surface tension at liquid-air and solid-air interfaces, and θ_{ls} is the same at the liquid-solid interface. For wholly wettable system $\theta < 0$.

From Eq. 29,

$$(\Delta h)_{max} = \frac{(m-4)\,\theta}{n_M \delta} \approx (m-4)\,\delta^2\theta \tag{30}$$

For $R \geq 10^{-4}$cm, $m = 6$ (Van der Waals force) $|\theta| \leq 100$ dyne/cm, $\dfrac{(\Delta h)_{max}}{kT} = 2 \div 3$, and consequently $M < 1$ for water.

Taking Q_e^* as equal to the activation energy of viscous flow and self-diffusion (14), i.e.,

$$Q_e^*/kT \approx 5 \div 7$$

we obtain

$$\mathcal{L} = (20 \div 40) \frac{D_b \eta}{R^2 T} \tag{31}$$

If in the system $P_1 = P_2$ at the beginning, the steady state establishes only in a certain time interval after the steady temperature gradient has set in. The magnitude of this time interval, depending on the self-diffusivity and on the characterizing dimension of a system (in this case, on the capillary length l), has the order of l^2/D. If Q_e^* and $(\Delta h)_{max}$ are of different sign—i.e. $(\Delta h)_{max} < 0$—the sign of $\mathcal{L}$ may change in the course of time, since during the first period the flow is governed by the temperature gradient-induced pressure head between the capillary ends (thermo-osmosis) and afterwards it depends mainly upon thermo-self-diffusion.

At present it is difficult to compare quantitatively the theory and experiments because of the lack of data and complexity of the systems investigated. Most of data concern polydispersed porous systems filled with electrolyte solutions, the influence of which calls for a special account in the theory. So the considerations that follow are only tentative.

Taylor and Cary (15) and Cary (2) studied thermal moisture and heat transfer in soils. They have found that in their systems Onsager's relation of reciprocity was obeyed both in saturated and unsaturated media. Habib and Soeiro (9) have found for saturated and very compacted loam $\mathcal{L}$ is of the order of 2×10^3 dynes/cm^2/grad with net thermal moisture transfer directed to a lower temperature.

One can find more details in the study by Taylor and Cary (15). During the first stage of their experiment the temperature field induced a pressure rise at the "hot" end of the column and lowering at the "cold" end. The pressure difference achieved a maximum of the order of 20 dynes/cm^2/grad; then this difference gradually changed to the opposite one having the order of 100 dynes/cm^2/grad.

Such a behavior of the system corresponds qualitatively to the theory reported, although it could be influenced by the other factors too, i.e, by the redistribution of dissolved substances.

The majority of data on the relationship between water enthalpy and moisture content of hydrophilic porous media demonstrate the lowering of h with diminishing of water film thickness (11). If this is the case, the thermo-osmotic flow must be directed to a higher temperature and induce the appropriate pressure difference. Water transfer to the lower temperature and steady state pressure difference of the reverse sign may be explained, among the other factors, by thermo-self-diffusion. Estimations with the help of Eq. 31 show that, when $R = 10^{-5}$ cm, $\mathcal{L}$ for water is of the order of 100 dynes/cm^2/grad, in semi-quantitative accordance with the data (15) if viscosity of water is assumed to be that of the bulk liquid.

The net pressure difference in the wholly filled capillary under temperature gradient is the result of a dynamic equilibrium of the three flow components: the thermo-osmotic one, I_B^T, directed to the higher temperature; the thermo-self-diffusion one, I_M^T, directed to the lower temperature; and the Poiseuille flow, I_B^P, directed opposite to the resultant of both former ones. The increased viscosity of water in the boundary layer influences mainly the thermo-osmotic component of the flow, causing its decrease.

REFERENCES

1. Ananian, A. A. The Study of Moisture Transfer and Appearance of Segregation Ice in Freezing and Frozen Soils. Tr. Gidroproekta, sb. 3, 1960, Moscow (in Russian).

2. Cary, J. W. Water Flux in Moist Soil: Thermal Versus Suction Gradients. Soil Sci., Vol. 100, No. 3, 1965.
3. Deriagin, B. V., and Sidorenkov, G. N. Thermo-Osmosis Under Normal Temperature Conditions and Its Similarity to Thermomechanical Effects in Helium—II. Doklady Akad. Nauk USSR, Vol. 32, No. 9, 1941 (in Russian).
4. Deriagin, B. V., and Melnikova, M. K. On Definition of Soil Moisture Transfer Laws. Sb. "Voprosy Agronomitcheskoi Fiziky." Selkhozizdat, Leningrad, 1956 (in Russian).
5. Frenkel, Ya. I. Kinetic Theory of Liquids. Akad. Nauk USSR, Moscow, 1945 (in Russian).
6. Globus, A. M. Study on Soil Water Movement Due to Thermal Gradient. Diss. Agrophysical Institute, Leningrad, 1962 (in Russian).
7. Globus, A. M. Influence of Apparent Density, Structure, and Nature of Solid Phase on Moisture Redistribution Due to Thermal Gradients in Closed Systems. Doklady Akad. Nauk USSR, Vol. 160, No. 1, 1965 (in Russian).
8. DeGroot, C. R., and Mazur, P. Non-Equilibrium Thermodynamics. North-Holland Publ. Co., Amsterdam, 1962.
9. Habib, P., and Soeiro, F. Migrations d'Eau dams les Sols provoquées par une Difference de Temperature. Proc. Fourth Internat. Conf. on Soil Mech. and Found. Eng., Leningrad, 1957.
10. Kutilek, M. New Method of Specific Surface Determination. Roslina Vyroba, Vol. 35, No. 6, 1962.
11. Low, P. Physical Chemistry of Clay-Water Interaction. Advances in Agronomy, Vol. 13, 1961.
12. Penman, H. L. Gas and Vapour Movement in the Soil. Jour. Agric. Sci. Vol. 31, 1940.
13. Philip, J. R., and De Vries, D. A. Moisture Movement in Porous Materials Under Temperature Gradients. Proc. Amer. Geophys. Union, Vol. 38, No. 2, 1957.
14. Robinson, R. A., and Stokes, R. H. Electrolyte Solutions. Leningrad, 1959.
15. Taylor S. A., and Cary, J. W. Analysis of the Simultaneous Flow of Water and Heat or Electricity With Thermodynamics of Irreversible Processes. Trans. Fourth Internat. Congr. Soil Sci., Amsterdam, 1961.
16. De Vries, D. A. Some Remarks on Heat Transfer by Vapour Movement in Soils. Trans. Fourth Internat. Congr. Soil Sci., Amsterdam, 1950.
17. Winterkorn, H. Fundamental Similarities Between Electro-Osmotic and Thermo-Osmotic Phenomena. HRB Proc., Vol. 27, p. 443-455, 1947.