viduals in the developments in soil mechanics, men who have given shape and dimensions to new ideas. For example, men who developed the pedological system of soil classification, the theory of consolidation, the moisture-density relationship in soil compaction, the present concept of the phenomenon of frost heaving and the currently used concept of swelling pressure, to name only a few. The problems in the field have hardly been more than surface explored.

There are among you who meet here today and who will meet at other points, some of those responsible for new findings which give even better definition to dimensions than those previously used. Those of you who are studying soil freezing and permafrost, the response of soil to vibration and to repeated rapidly applied loadings or impact, exemplify my point. Without doubt, you can name a host of others of equal significance.

Wherever we may now be in our progress of development of this young science of soils mechanics and where our future lies, depends in large measure on individuals now in this room, for you are recognized leaders in the field. That development could take a slow pace if each of you elected to work as an individual and to jealously guard your findings, or that development could be rapid and its benefits be made available to all men quickly if you pool your knowledge through cooperative visits such as this one. The American Society of Civil Engineers and the Highway Research Board of the National Academy of Sciences are organizations whose very existence depends upon cooperation in the solution of engineering problems.

It is my great privilege as director of the Highway Research Board to welcome our distinguished Soviet technical visitors to this the first of five seminars to be held in this country during their three-week visit. We have looked forward to this occasion as one of signal importance and promise. By exchanging ideas and pooling experiences derived from a variety of studies in the two countries we can do much in furthering our knowledge of soils in the field of engineering and in making possible similar future meetings of mutual benefit.

In conclusion, I would like to express my sincere gratitude to each of you who have come to contribute your ideas and experiences, for from a better knowledge of soil mechanics will come better solutions to our soil engineering problems.

Problems of Frozen Soil Mechanics in Engineering Practice

NIKOLAI A. TSYTOVICH, *Chairman,*
National Association of Soil Mechanics and Foundation Engineering, USSR

SUMMARY OF THE REPORT

More than a quarter of the world's land and about 47 per cent of the USSR territory are covered by permanently frozen soils *(Fig. 1)*.

Construction on permanently frozen soils is associated with many specific features, which, if not taken into consideration, cause unadmissible deformations quickly destroying structures *(Fig. 2)*.

The deformations of structures built on permanently frozen soils are due to their settling at unproportional thawing and the heaving of soils and foundations at freezing *(Figs. 3, 4, 5, 6, 7)*.

These deformations are the results of peculiar properties of frozen soil and are caused by sharp alterations of their volume and structure both at freezing and thawing *(Fig. 8)*.

The proper solution of the problems of construction on permafrost is possible on the basis of a new science—mechanics of frozen soils—the application of which allows safe and economical design of the constructions.

The main contemporary problems are:

1. Consideration of the parameters and the determination of stress-strained state of frozen soils.

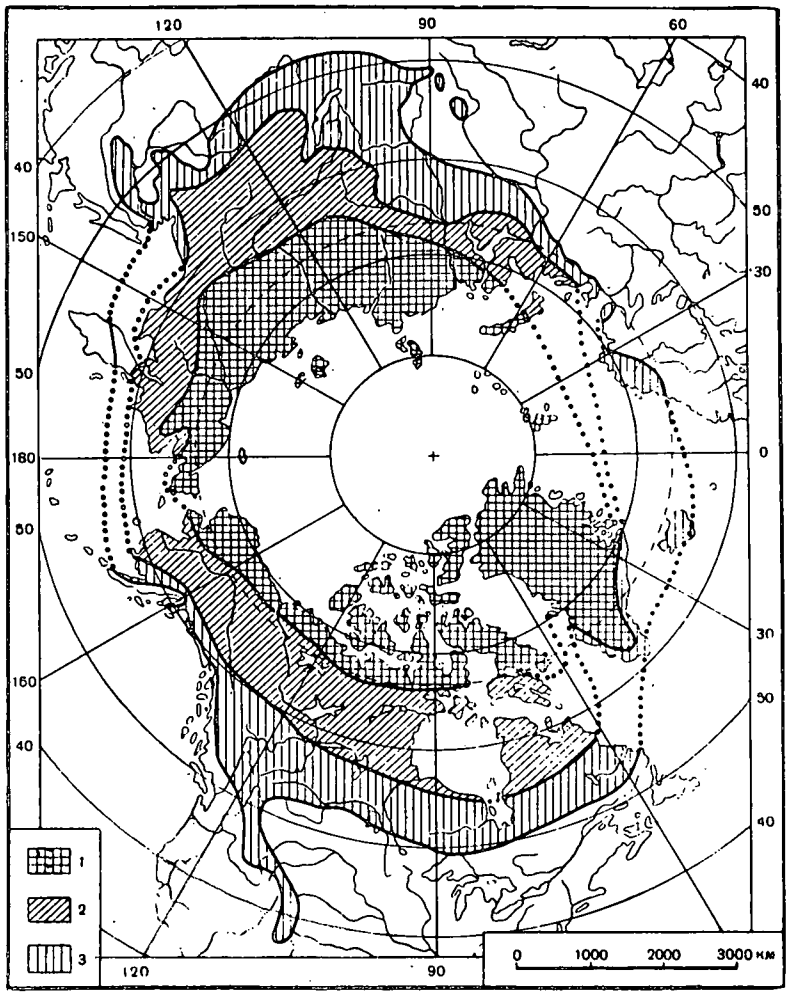

FIGURE 1
Distribution of frozen soils in the northern hemisphere (after Black): 1. zone of continuous permafrost; 2. zone of discontinuous permafrost; 3. zone of sporadic permafrost.

2. Establishment of general laws of frozen soils mechanics by means of thorough study of their nature.

3. The methods of solution of frozen soil mechanics, and the engineering problems for construction practice.

4. The investigation of the practical applicability limits of separate theories and the determination of the corresponding correction coefficient.

The most important parameters of frozen soils are as follows:

1. Shearing strength, as the initial value for limit load and deformation modulus of frozen soils determination, when they are considered as foundations *(Fig. 9)*.

2. Continuous strengths and deformation moduli of frozen soils, as construction materials *(Fig. 10)*.

3. Heaving forces, congelation strength, "solidity coefficients" of frozen soils as a medium for construction *(Fig. 11)*.

It is presently necessary to pass from local characteristics of frozen soils to the characteristics of frozen soil massifs and to use new methods: crystallooptical, radioactive rays, ultrasound, electrotensometric and other methods.

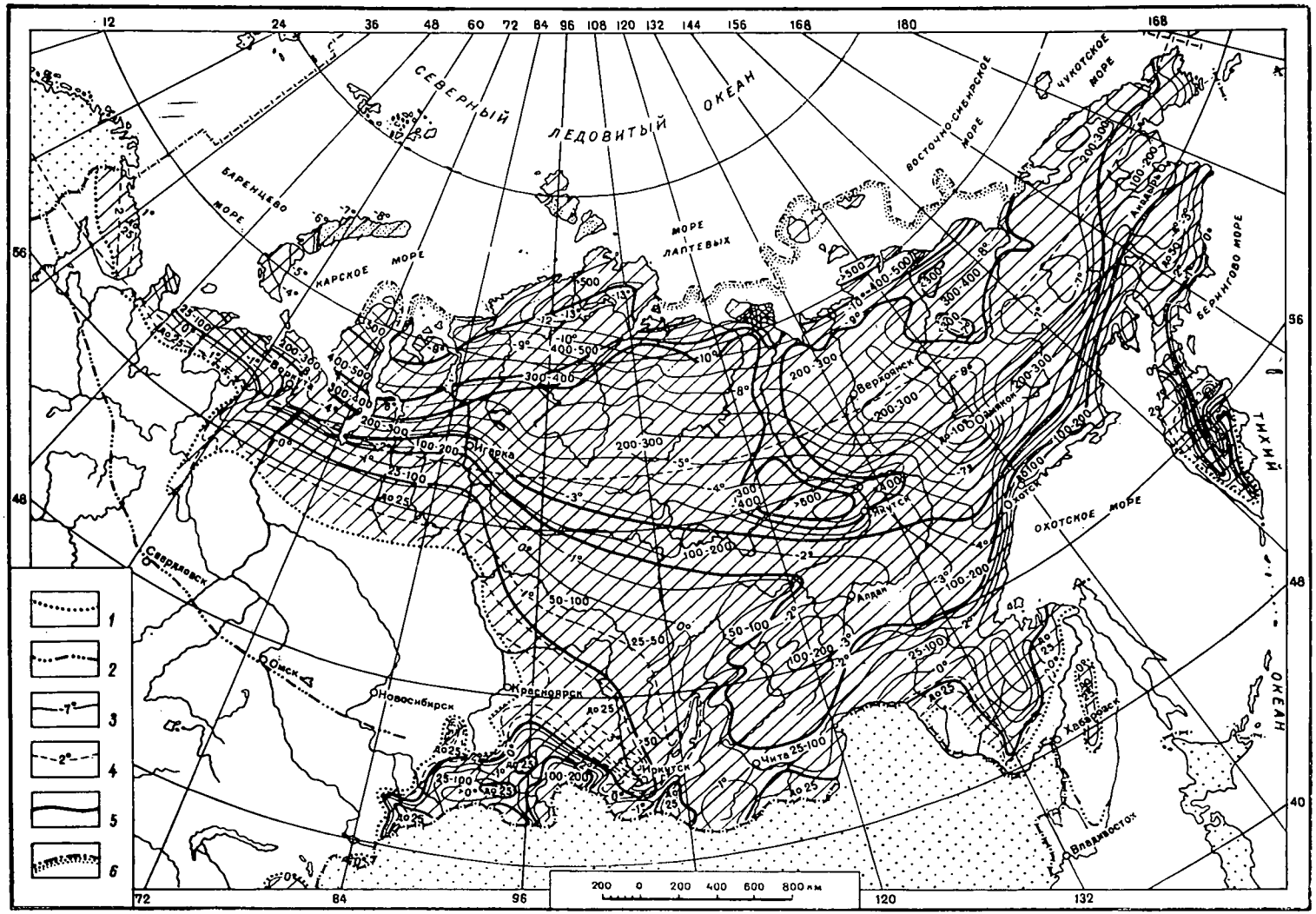

FIGURE 2

Permafrost map of the USSR (after Baranov): 1. southern boundary of permafrost occurrence; 2. boundary of the "pereletki" zone; 3. temperature isolines at the depth of zero amplitudes; 4. temperature isolines in soil at the depth of 1 to 2 meters; 5. thickness of permafrost (in meters); 6. permafrost boundary under sea bottom

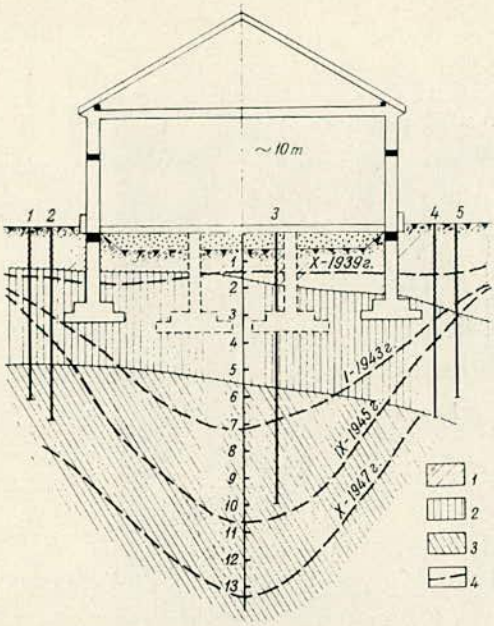

FIGURE 3

An example of unproportional soil thawing as the cause of foundation deformation: 1. mantle clayey soils; 2. moraine clayey soils; 3. gravel clayey soils (lower moraine); 4. boundary of thawing (S = 20 cm; ΔS = 8 cm; occurrence of fissures).

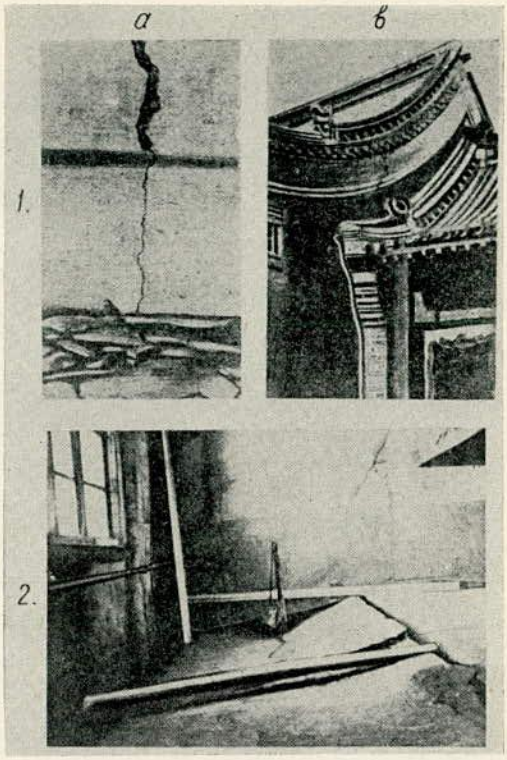

FIGURE 5

Photos of deformed building erected on permafrost soils: 1. fissures in randbeams (a) and in building walls (b) due to the heaving of soils; 2. floor deformation at fish packing plant caused by settling of frozen soils on thawing.

Experimental investigations allow establishment of the following cardinal points of frozen soil mechanics:

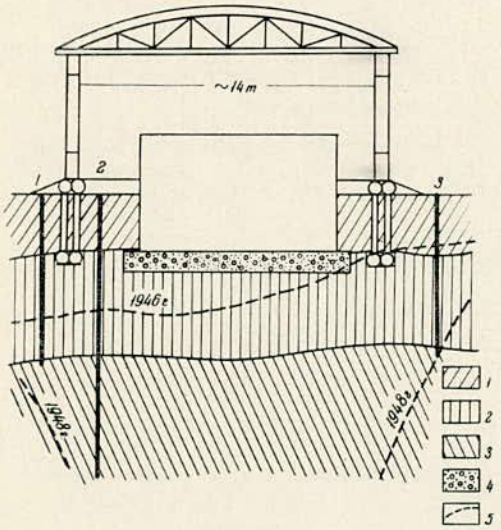

FIGURE 4

Thawing of soils under the boiler building: 1. mantle clayey soils; 2. moraine clayey soils; 3. moraine clayey soils of lower moraine; 4. gravel; 5. thawing boundary.

1. The principle of dynamic balance of water and ice in frozen soils *(Fig. 12)*.

2. The conditions of water migration in freezing and frozen soils *(Fig. 13)*.

3. Dependence of frozen soil strengths on their composition, temperature and structure *(Fig. 14)*.

4. Decrease of frozen soil strength to external forces with time due to the relaxation of stresses *(Fig. 15)*.

5. The conditions of frozen soil densification and the beginning of plastic flow *(Fig. 16)*.

6. The dependence of frozen soils settlements at thawing on the value of external pressure *(Fig. 17)*.

7. The breaking of structural bonds in freezing-thawing cycles *(Fig. 18)*.

The chief practical engineering problems of frozen soil mechanics are:

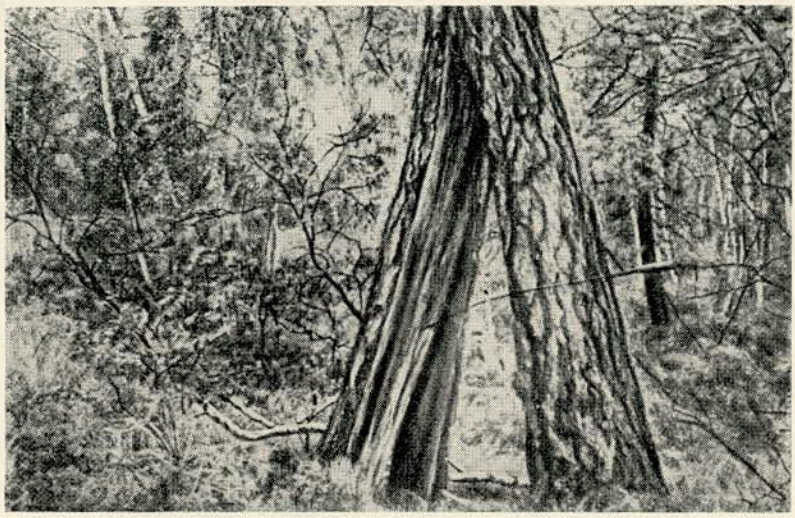

FIGURE 6
An illustration of frost heaving forces in soils (splitting of tree trunk).

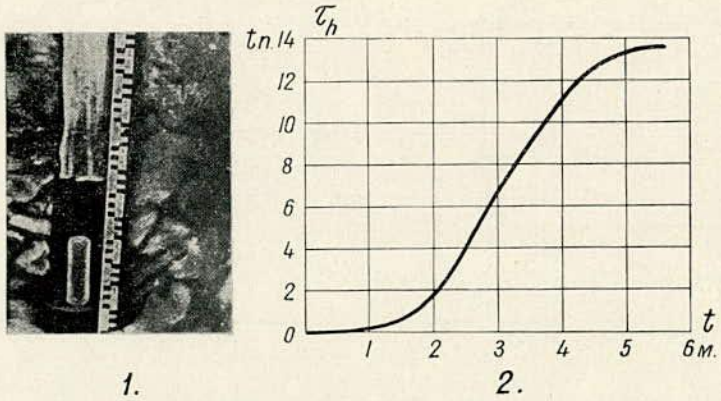

FIGURE 7
Open ground works with upheaved post: 1. upheaved post; 2. change of frost heaving forces with time.

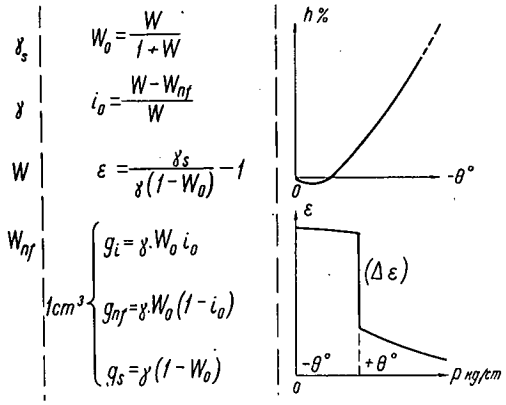

FIGURE 8

Physical properties of frozen soils. Determined by measurements: γ_s—specific weight of mineral particles; γ—volume weight of natural structure; W—natural water content; W_{nf}—quantity of unfrozen water. Calculated: W_0—total water content (relative to wet soil weight); t_0—relative ice content, ϵ—porosity coefficient, g_i—ice weight; g_{nf}—unfrozen water weight, g_s—mineral particles weight; at the right side—heaving curves at freezing and settling at thawing.

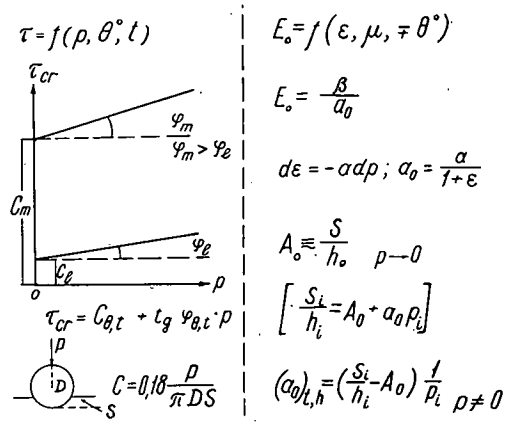

FIGURE 9

Characteristics of frozen and thawing soils as construction bases. τ_{cr}—critical (limiting) shearing strength; C_m, ϕ_m—instantaneous cohesion and internal friction angle; C_e and ϕ_e—corresponding continuous values; E_0—general deformation modulus, A_0—reduced thawing coefficient; a_0—reduced coefficient of densification at thawing.

Fr.gr. σ_e кg/cm²

fr. > 0,005mm	$-\theta°$		
	-0,4°	-1,2°	-4,0°
< 3%	6	10	14
3-10% (W < 35%)	3,5	7	10
10-30% (W < 45%)	3,0	5	8
w.i. (W > 45%)	2,5	4	6

Ice

$R_\alpha = 5 - 150$ кg/cm²

$R_{m\alpha} \cong 30$ кg/cm²

$\eta \cong 2{,}5 \cdot 10^{14}$ gr.sec/cm² $= 7 \cdot 10^{14}$ кg.h./cm²

$R_z \cong \frac{1}{2} \cdots \frac{1}{3} R_\alpha$

$$\varepsilon = \varepsilon_c + \varepsilon_e + \varepsilon_p$$

FIGURE 10

Frozen soil and ice strength, as construction materials. σ_e—continuous strength (strengths for designing); R_d—destruction pressure stress; R_z—the same for tension; ϵ—relative deformation; of densification (ϵ_c), elastic (ϵ_e), and plastic (ϵ_p).

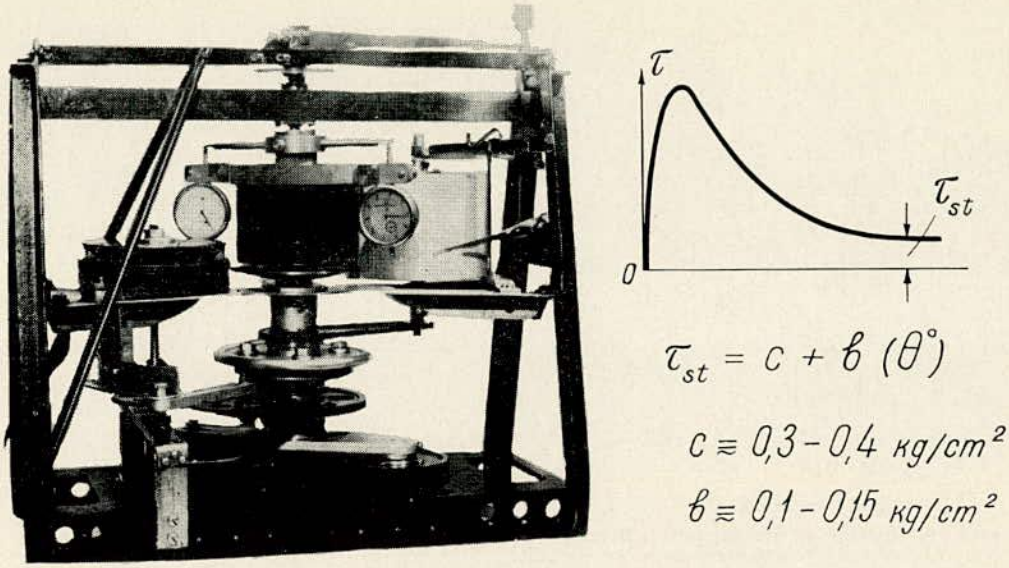

FIGURE 11

Characteristics of frozen soil as a construction medium. (Left) B. Dalmatov's apparatus for determination of heaving forces. (Right) determination of steady congelation force ($_{\tau}$); and continuous congelation strength ($_{\tau_{st}}$).

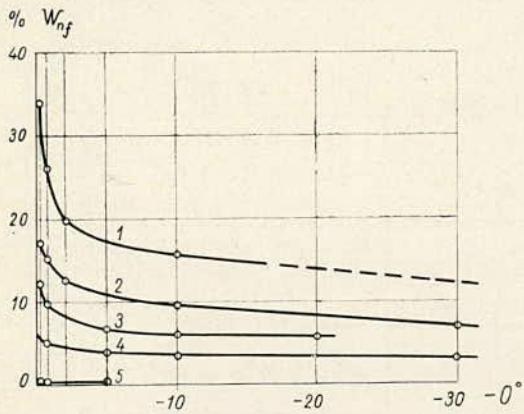

FIGURE 12

Curves of equilibrium content of unfrozen water (W_{nf}) in frozen soils. 1. Clay; 2. cover clay; 3. loam; 4. clayey sand; 5. sand.

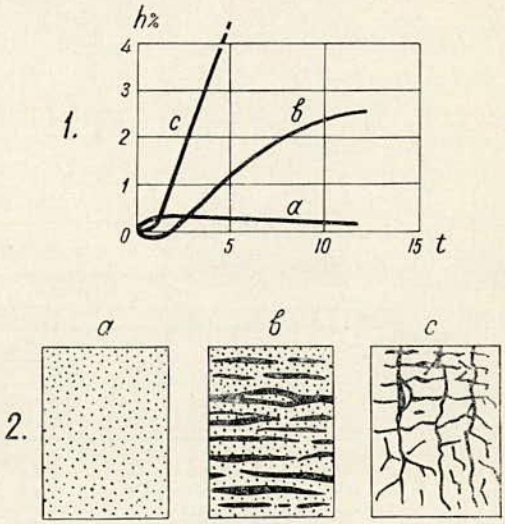

FIGURE 13

Processes caused by the migration of water in freezing soils (frost heaving, formation of structure). 1. Frost heaving of soils (a) sand, (b) clay, (c) silty loam with supply of water; 2. types of frozen soil structures (a) massive; (b) laminar; (c) cellular.

1. Prognosis of temperature and moisture field in frozen soils and the changes under the influence of constructions *(Figs. 19, 20)*.

2. Determination of limit loads for frozen soils *(Fig. 21)*.

3. Determinations of frozen soil deformations at different stages of strain (at densification, plastic and progressing flow as shown in Figure 16).

4. Prognosis of construction settlements on thawing soils as shown in Figure 17.

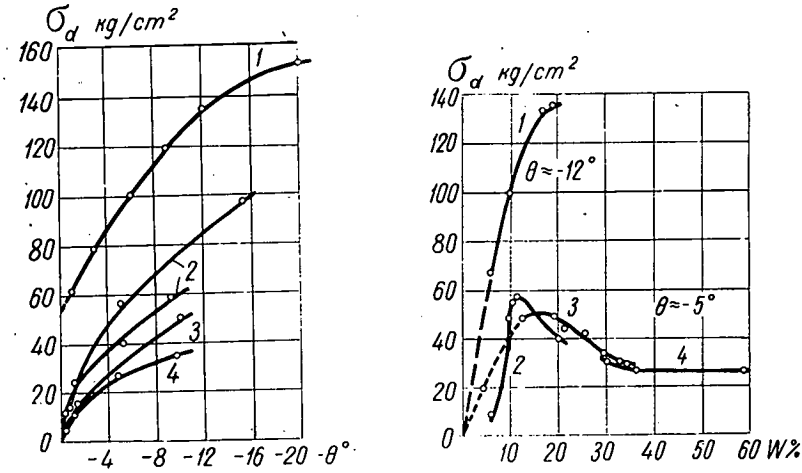

FIGURE 14

Dependence of frozen soil strengths on composition, temperature and structure. (Left) dependence of limiting strength (σ_d) of frozen soils on pressure: 1. sand, 2. clayey sand differently wetted; 3. clay; 4. silty clay. (Right) dependence of limiting strength (σ_d) on water content.

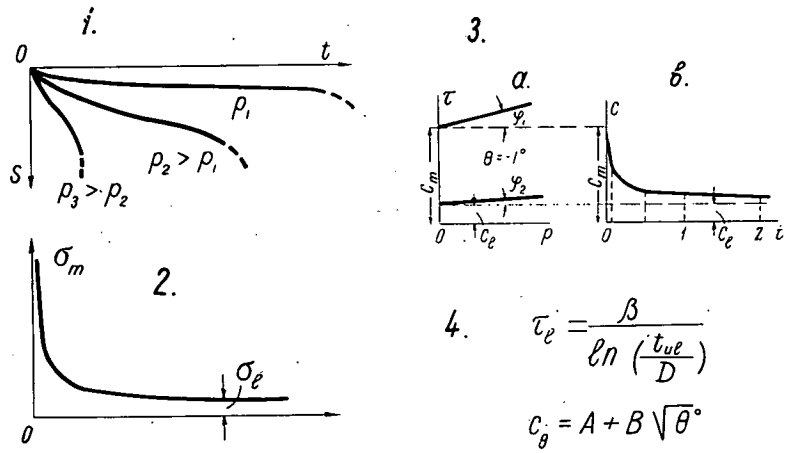

FIGURE 15

Frozen soil strength decrease with time (relaxation of strength). 1. Transition of plastic flow into progressive flow; 2. decrease of normal strength; 3. decrease of shearing strength; 4. dependence of shearing strength (τ) on time, and cohesion (C_θ) on the value of negative temperature.

5. Consideration of the alterations in mechanical properties of soils when the soils freeze and thaw as shown in Figure 18.

Let us consider briefly some general solutions of engineering problems concerning the mechanics of frozen soils including the calculations of foundations with preservation of permafrost according to the constructive method *(Fig. 22)*, taking into account the thawing settlements *(Fig. 23* and *Figs. 31, 32)*, and by the method of preconstruction thawing *(Figs. 24, 25)*.

The limits of applicability of suggested methods and worked-out solutions can be established only by means of special observations of the stress-strained state and its

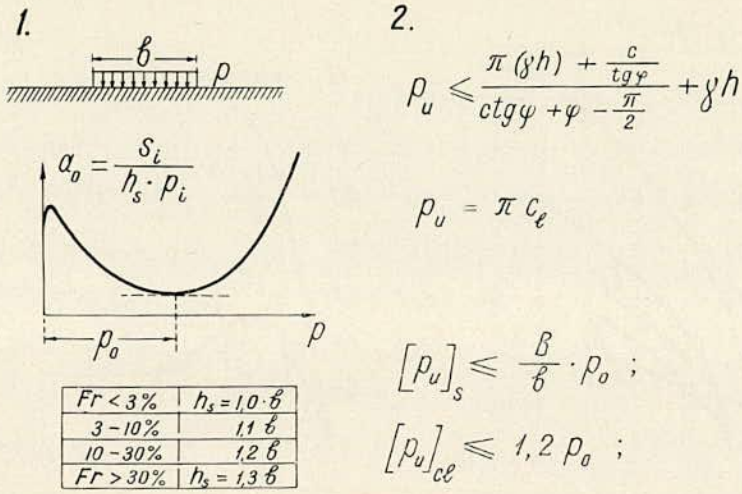

FIGURE 16

Conditions of soil densification and of plastic flow start. 1. Determination of densification stage limit (p_0 kg/cm²) by testing load results; 2. theoretical calculation of densification stage limit ϕ—internal friction angle, c—cohesion, B—foundation width, b—testing area width, a_0—reduced densification coefficient; c_e—continuous cohesion for cohesive soils, $p_{u,s}$—for sands, $p_{u,cl}$—for clays.

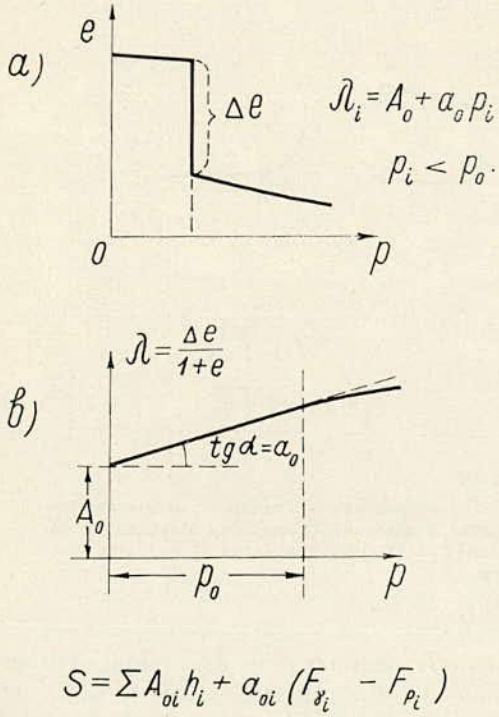

FIGURE 17

Dependence of relative deformation (λ_i) of thawing soils and of total formation settling (S_i) on external pressure (p_i) and own weight (γ) of thawed soil. ($F_{\gamma i}$—area of diagram of densifying pressure caused by own weight of thawed soil; F_{pi}—the same for external load.

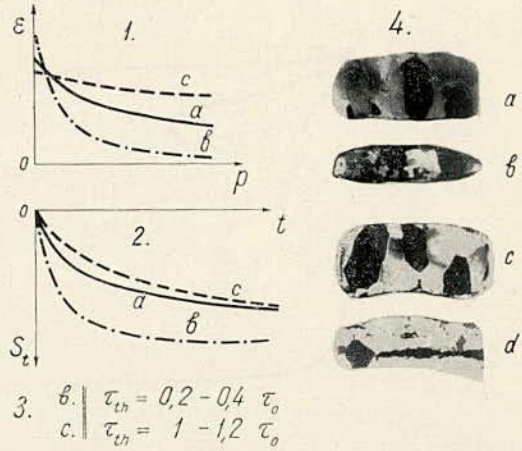

FIGURE 18

Changes in structural bonds in soils during freezing-thawing cycle. 1. Compressibility change; 2. densification speed change; 3. shearing strength change during freezing-thawing cycle: (a)—before freezing, (b)—for laminar and cellular structure, (c)—for massive structure at freezing; 4. ice structure: (a, c)—before deformation, (b, d)—after compression and after shearing.

changes in the course of time in experimental constructions with the determination of mechanical parameters of frozen soils and of construction materials.

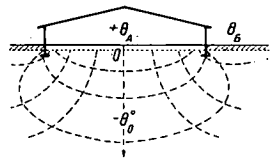

$$h_{max} = \alpha\sqrt{t} - \beta t$$

$$\alpha \approx \sqrt{\frac{2\lambda(\Delta\theta)}{\xi \cdot W_0 \gamma \cdot i_0 + \frac{c\gamma(\Delta\theta)}{2}}} \; ; \; \beta = \frac{q}{\xi \cdot W_0 \cdot \gamma \cdot i_0}$$

$$h_0 \approx h_{max}$$

FIGURE 19

Thawing depth determination. h_{max}—thawing depth in the case of linear problem; λ—coefficient of heat conductivity; C—heat capacity; ξ—ice melting heat; q—thermal flow from the Earth interior (0.5 to 6 kcal/m²/hr.

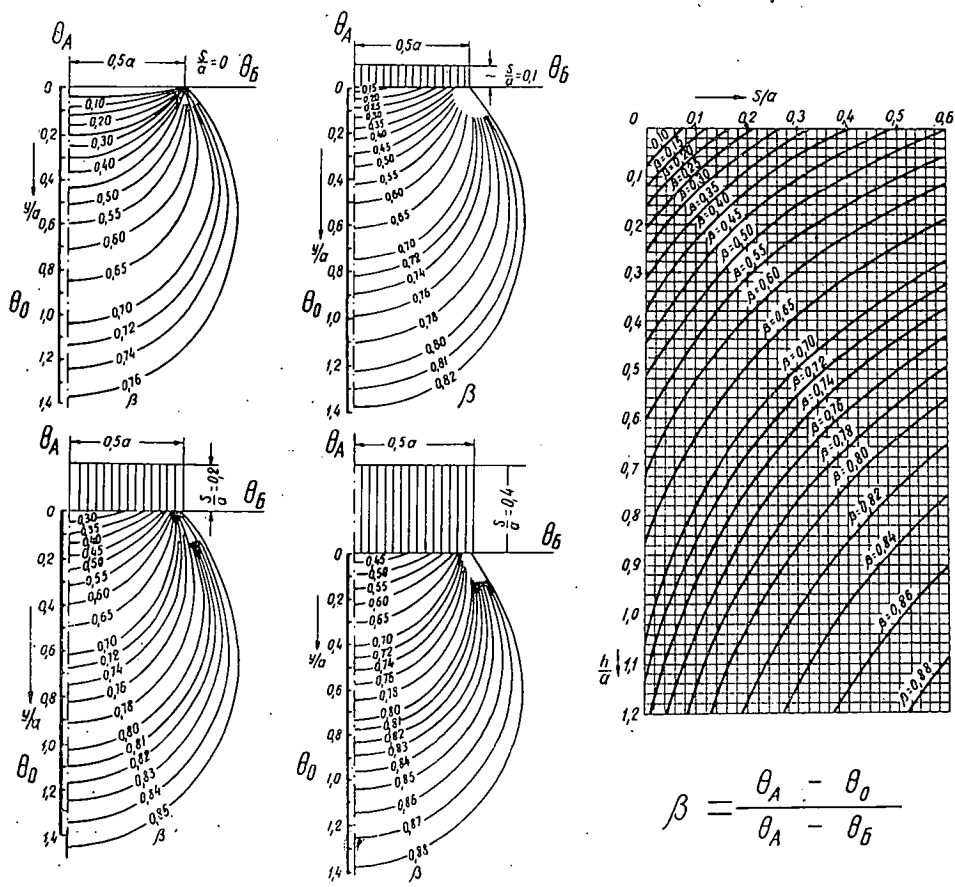

FIGURE 20

Calculation of limit thawing "basin" (after Golovko) S/a—equivalent thermal isolation thickness, b—width.

1.		2.			
	$c=f(t,W,\theta^\circ);\varphi=0$	$c=0;\varphi=f(t,W,\theta^\circ);p_u=D\cdot\gamma b+\gamma h$			
		h/b	$\varphi=26^\circ$	30°	36°
$\frac{l}{b}>10$	$p_u=5{,}14c+\gamma h$	0	6,8	D = 10,8	26,2
		1	21,3	34,8	79,5
		2	36,3	58,9	138,0
$\frac{l}{b}=1$	$p_u=5{,}7c+\gamma h$	0	—	17,3	~56
		0,5	—	33,7	~106
		2	—	122,0	~335
$\frac{l}{b}>10$	$p_u=c\cdot Ctg\,\varphi(\xi-1)+\gamma h\cdot\xi;\ \xi=e^{\pi tg\varphi}tg^2(45^\circ+\frac{\varphi}{2})$ $\varphi\neq0;\ c\neq0$				

FIGURE 21

Formulas for determination of limit load on frozen and thawing soils. 1. For frozen cohesive and solid clayey soils; 2. for thawing soils ($\phi_{t,h}<\phi$) and for dense loose soils.

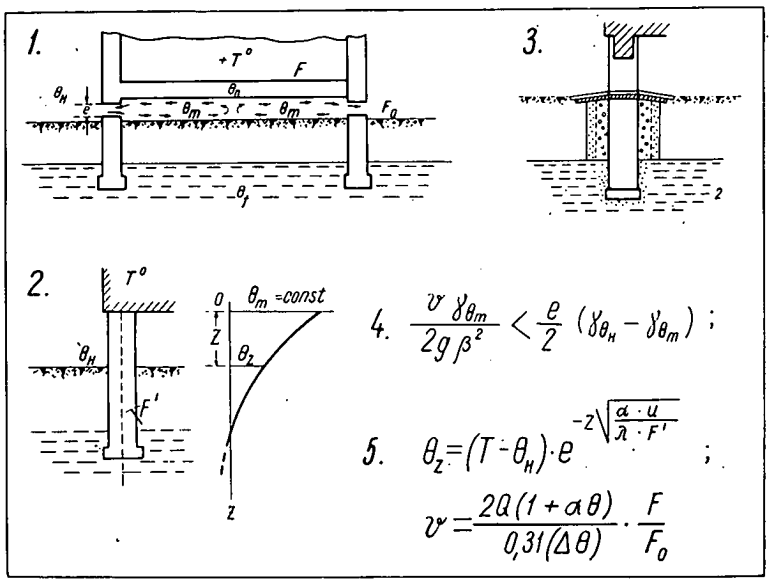

FIGURE 22

Calculation of foundations erected with preservation of permafrost in base. 1. Scheme of underfloor space ventilated in winter; 2. temperature change with depth of pillar foundation; 3. constructive scheme of foundation and counter-heaving filling; 4. formula for calculation of height (e) of ventilated underfloor space; 5. formula for determination of temperature along foundation axis.

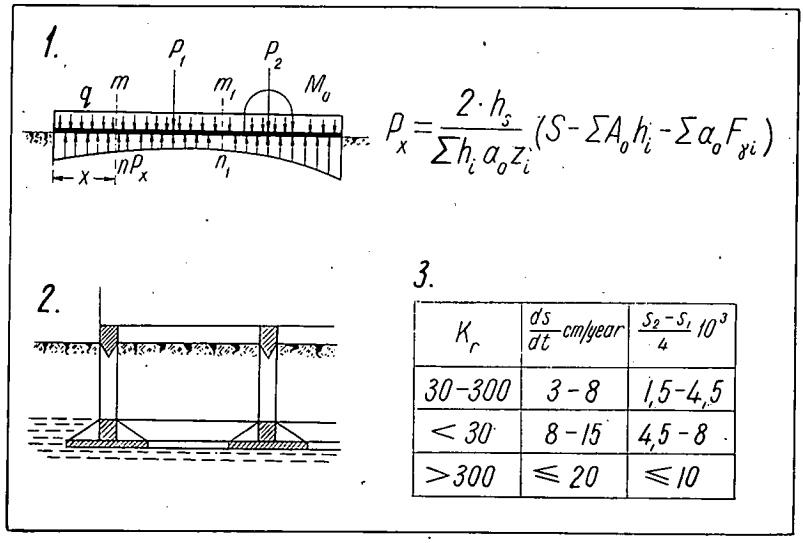

K_r	$\frac{ds}{dt}$ cm/year	$\frac{S_2 - S_1}{4} 10^3$
30–300	3–8	1,5–4,5
< 30	8–15	4,5–8
>300	≤ 20	≤ 10

FIGURE 23

Schemes of calculation and construction of foundations erected with the thawing of frozen base soils. 1. Calculation scheme; 2. construction scheme for rigid foundations; 3. value of limit deformations at base thawing. K_r—rigidity coefficient.

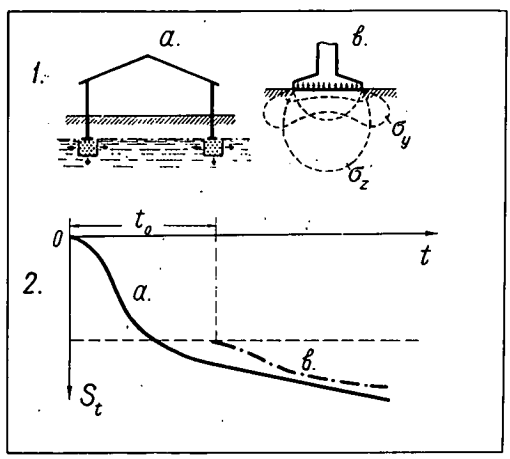

FIGURE 24

Scheme of foundation work at preliminary thawing: 1. (a) thawing zones scheme, (b) pressure isolines under foundation; 2. settling value: (a) in the process of thawing at construction exploitation and (b) at preliminary thawing; t_0 time of preliminary thawing.

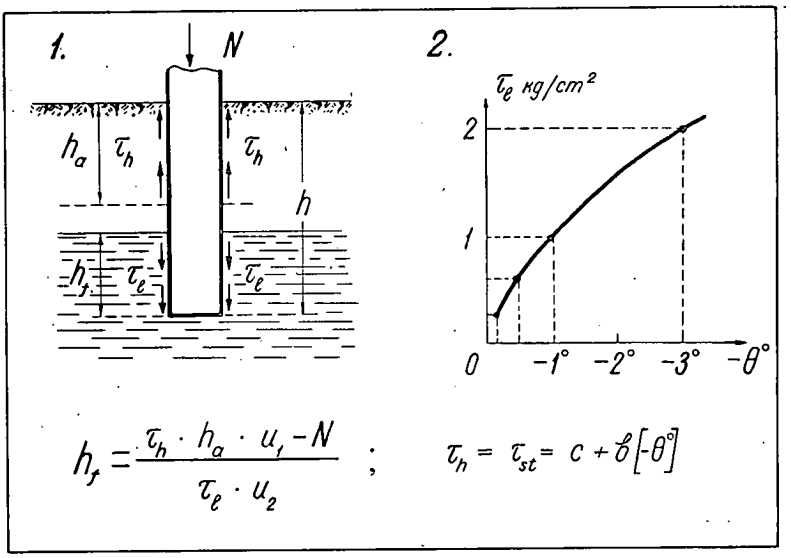

FIGURE 25

Scheme of foundation calculation for frost heaving. 1. Forces involved; 2. dependence of continuous congelation strength (τ_0) on the value of negative temperature; 3. formulas for necessary foundation sinking into frozen soil; h_a—active depth, about $\frac{2h}{3}$ in the case of frozen soils; U_1, U_2—formulation perimeter in active layer and in permafrost; τ_h—specific upheaving force.

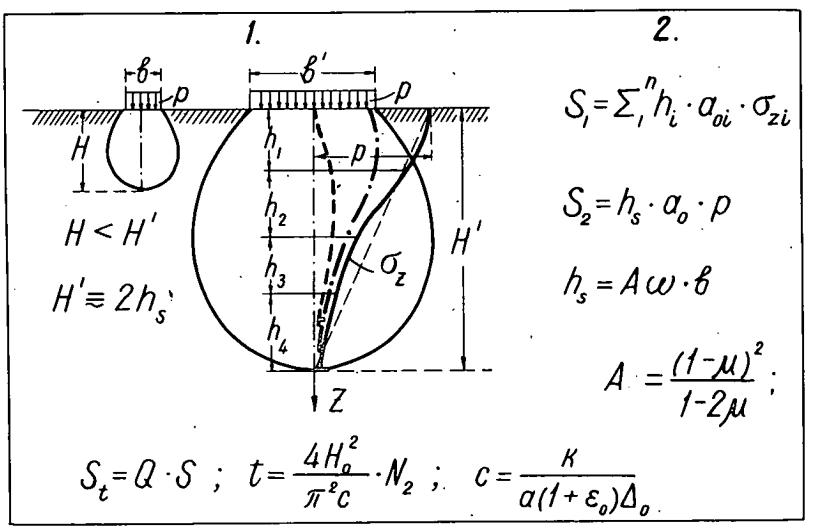

FIGURE 26

Example of foundation setting calculation on homogeneous soils: 1. dependence of densification zone value on dimensions of loading area and the concept of equivalent soil layer (h_s); 2. formulas for foundation setting calculation in homogeneous soils; S_1—by the method of elementary summing (without accounting for lateral expansion of soil); S_2—by the equivalent layer method (worked out by the author) accounting for lateral expansion of soil (μ), and size and shape of foundation, and its rigidity (coefficients, w, b).

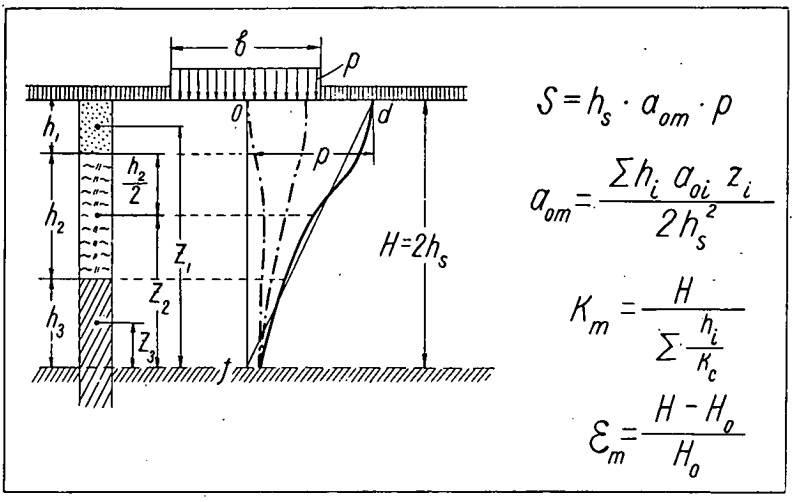

FIGURE 27

Equivalent diagram of densifying pressures (odf) and formulas for calculation of foundation settlement on laminar layer of soils by the equivalent soil layer (h_s) method.

$a=\frac{l}{b}$	Gravel		Sands				Plastic Loams		Plastic Clays	
	Hard Clay and Loams				Sandy Loams					
	$\mu=0.10$		$\mu=0.20$		$\mu=0.25$		$\mu=0.30$		$\mu=0.35$	
	Aw_c	Aw_m	Aw_c	Aw_m	Aw_c	Aw_m	Aw_c	Aw_m	Aw_c	Aw_m
1	0.568	0.96	0.598	1.01	0.631	1.07	0.687	1.17	0.790	1.34
1.5	0.687	1.16	0.724	1.23	0.764	1.30	0.832	1.40	0.956	1.62
2	0.775	1.31	0.817	1.39	0.862	1.47	0.938	1.60	1.079	1.83
3	0.903	1.55	0.951	1.63	1.003	1.73	1.092	1.89	1.256	2.15
4	0.994	1.72	1.047	1.81	1.105	1.92	1.203	2.09	1.383	2.39
5	1.065	1.85	1.122	1.95	1.184	2.07	1.289	2.25	1.482	2.57
6	1.124	1.98	1.184	2.09	1.249	2.21	1.360	2.41	1.568	2.76
7	1.173	2.06	1.236	2.18	1.304	2.31	1.420	2.51	1.632	2.87
8	1.216	2.14	1.281	2.26	1.316	2.40	1.472	2.61	1.692	2.98
9	1.254	2.21	1.321	2.34	1.393	2.47	1.517	2.69	1.744	3.08
10 and more	1.288	2.27	1.357	2.40	1.431	2.54	1.558	2.77	1.792	3.17

FIGURE 28

Table of equivalent layer coefficient (Aw) values for calculation of foundation settlement on compressible soils: Aw_c—for corner points of flexible foundations with rectangular bases; Aw_m—for average settlement of rigid foundations.

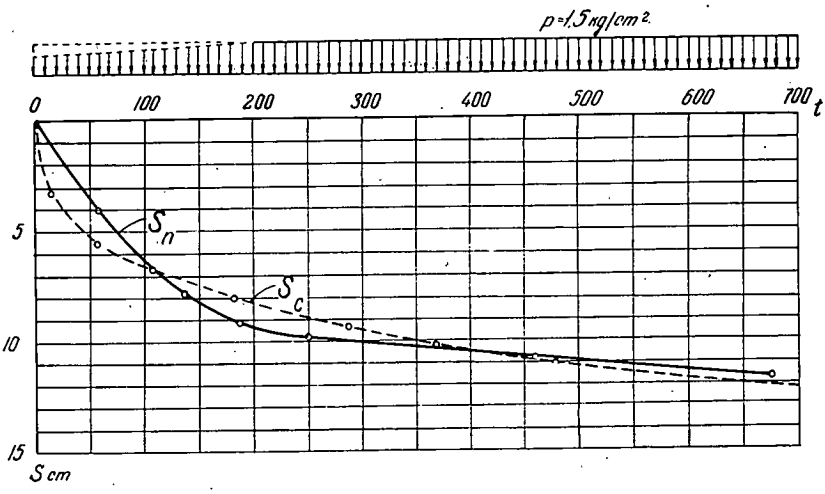

FIGURE 29

Comparison of settlement (S_c) calculated by equivalent layer method with measured settlement (S_n) of school building erected on complicated (seven layers) soil base.

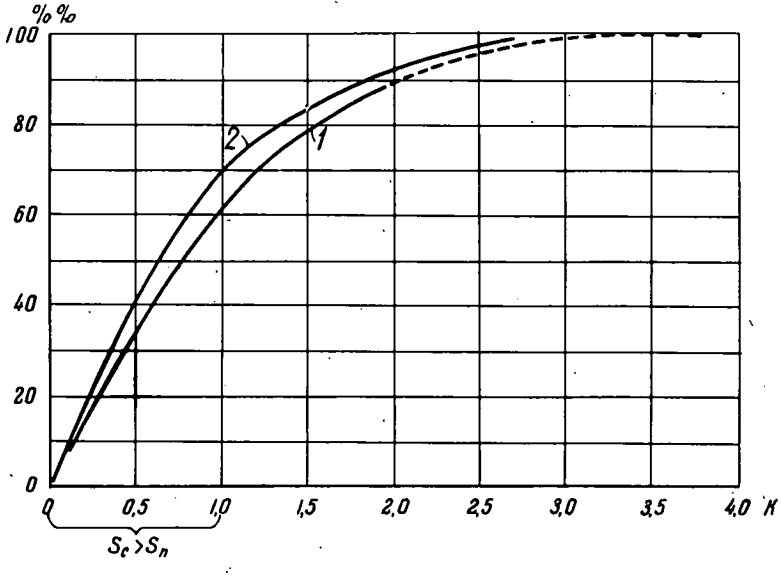

FIGURE 30

Curves of statistical distribution of certainty coefficient (K) for different methods of foundation calculation: 1. as calculated by the method of elementary summation; 2. as calculated by the equivalent soil layer method (when design settlement in 80 per cent of the cases is not smaller than actual, coefficient of certainty is from 1.3 to 1.5).

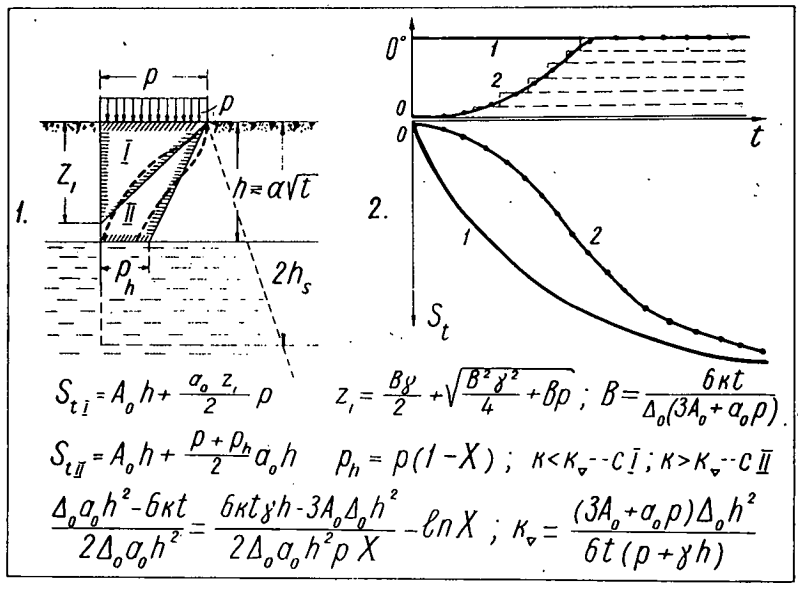

FIGURE 31

Calculation scheme for causes of change with time of foundation settlement in thawing soils: 1. when thawing speed is greater than that of densification (S_{tI}) and 2. when speed of densification is less than that of thawing (S_{tII}); on the right—curves of foundation settlement with time at a different heat transfer. $\theta = F(t)$ in partial case at $A_0 = 0$ and $\gamma h = 0$ the formulas transform into those obtained previously by K. Terzaghi for unfrozen soils.

Ultimate values of settlements

K_r 1	$\frac{dh}{dt}$ m/year 2	S cm 3	$\frac{dS}{dt}$ cm/year 4	Slope $i \cdot 10^3$ 5	Deflection $f \cdot 10^3$ 6
30÷300	0,3-0,9	10-20	3-8	1,5-4,5	1-3
<30	0,9-1,8	20-40	8-15	4,5-8	3-6
⩾300	to 2	to 50	to 20	to 10	—

$$K_r \cong 1{,}7(1-\mu_0^2)\left(\frac{A_0}{p} + a_0\right)\cdot\Omega\cdot E_B\frac{H^3}{L^3}$$

FIGURE 32

Ultimate values of settlement (after V. P. Ushkalov). 1. Rigidity index; 2. soil thawing rate under the construction; 3. settlement rate; 4. limiting settlement rate; 5. limit gradient; 6. limit downwarping of foundations (according to USSR standards, values of admitted deformations are about twice smaller).