A Truck-Mounted Portable Maintenance Barrier

W. LYNN BEASON and HAYES E. ROSS, Jr.

ABSTRACT

A truck-mounted portable maintenance barrier is described. The barrier is designed to provide a reasonable degree of positive protection in short-duration work zones where it is not practical to use conventional barriers. It consists of a steel barrier section supported between two maintenance trucks. The barrier section is towed to the work zone on a specially fabricated transport dolly. On-site deployment can be accomplished by a crew of two men in 15 min or less. The barrier is highly maneuverable in the deployed configuration so that it can be easily repositioned as the work progresses. Three full-scale crash tests were conducted to demonstrate the impact performance of the barrier.

There is an increasing number of high-volume, multilane expressways where it is not practical to stop traffic across all lanes during single-lane maintenance operations. The current approach is to close only the lane under repair and redirect traffic into adjacent lanes. The problem with this approach is that the work zone is adjacent to a traffic lane, which exposes the workers to the risk of being struck by an errant vehicle. This situation is particularly hazardous during times of heavy traffic flow when the loss of even one lane of traffic can create severe local traffic congestion. There is an urgent need to increase the protection of workers in this situation.

In some instances, the nature of the maintenance is such that the work zone is occupied for weeks or months. In such cases, it is possible to install portable concrete barriers (1). In other instances, the time required to accomplish the maintenance is such that it would take substantially more time to deploy portable concrete barriers than it does to perform the maintenance. In addition, the widths of the portable concrete barriers are such that they encroach into either the work zone or the adjacent traffic lane.

Research discussed here was directed toward development of a truck-mounted portable maintenance barrier for use in short-term highway maintenance. The portable maintenance barrier provides a reasonable degree of protection for the workers; it can be easily deployed and, once deployed, it remains highly maneuverable.

Discussions of the concept of the portable maintenance barrier, the performance criteria, and results of both strength and maneuverability tests are presented.

CONCEPT

It is common practice in highway maintenance to station maintenance vehicles in the work-zone lane. This is done to provide ready access to supplies and to prevent unnecessary blockage of additional traffic lanes. A side benefit of this practice is that the maintenance vehicles afford the workers protection from in-lane impacts. The purpose of the research reported here is to develop a barrier system that enhances the protection afforded by in-lane maintenance vehicles. The portable maintenance barrier developed is intended for use in short-term (less than 1 day) maintenance operations such as guardrail replacement, pothole repair, and so on. Major emphasis was placed on developing a barrier that is easily transported and deployed.

The truck-mounted portable maintenance barrier consists of a steel barrier section supported between two trucks as shown in Figure 1. Figure 2 shows planned deployments of the portable maintenance barrier in a work zone. The support trucks provide protection against in-lane impacts, and the barrier section provides protection against lateral impacts. The major components of the portable maintenance barrier are the support trucks, the hitch assemblies, the support members, the barrier section, and the transport dolly (Figure 3). Each of these components is discussed in the following paragraphs.

The support trucks used in the prototype are 5-yd^3 (3.8-m^3) dump trucks. The only modification to the trucks consisted of the installation of frame plates to increase the in-plane stiffnesses of the truck frames so that the support trucks can withstand the design impact without damage. The frame plate is a steel plate 1/2 in. (1.27 cm) thick mounted between the frame members of the truck and the dump bed in a horizontal plane. The frame plate does not interfere with the dump mechanism.

Two different types of hitches were developed to

FIGURE 1 Truck-mounted portable maintenance barrier.

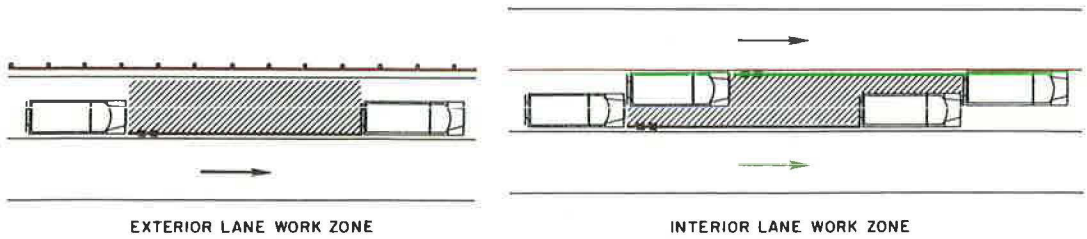

FIGURE 2 Single-lane barrier deployments.

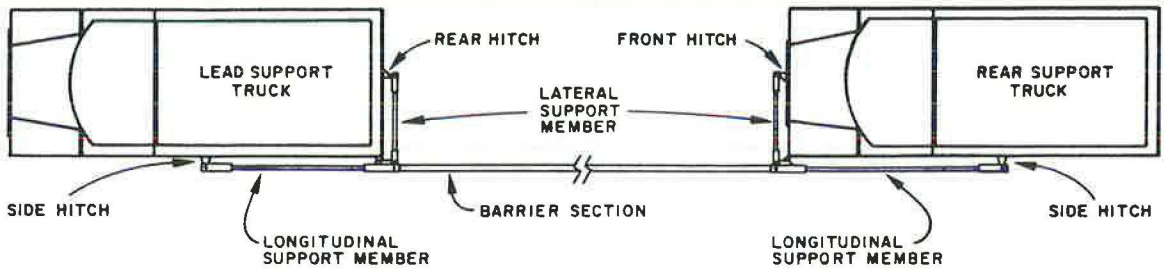

FIGURE 3 Barrier components.

attach the support members to the trucks: a front-rear hitch and a side hitch. Fabrication details of the hitches are presented in Figures 4 and 5. The lead support truck is equipped with a rear and a side hitch, and the rear support truck is equipped with a front and a side hitch. The support members attach to the hitches with pins and bolts.

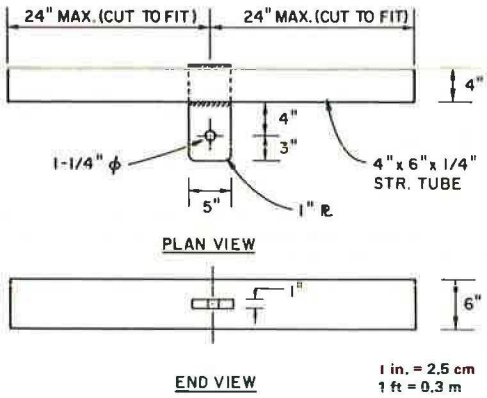

FIGURE 4 Fabrication details of front-rear hitches.

Two types of support members were developed to attach the barrier section to the hitches: longitudinal support members and lateral support members. The support members transfer the impact forces from the ends of the barrier section to the support truck hitches. The longitudinal support members connect the side hitches to the ends of the barrier section. The lateral support members connect the barrier ends of the longitudinal support members to the rear and front hitches of the front and rear support trucks, respectively. Fabrication details of the support members are presented in Figures 6 and 7.

The barrier section is fabricated by using two parallel sections of 6 x 6 x 1/4-in. (15.24 x 15.24 x 0.64-cm) structural steel tubes welded together as shown in Figure 8. The weight of the barrier section is supported by two swivel casters permanently mounted on the underside of the barrier section as shown in Figure 9. In addition, two screw jacks are permanently mounted on the barrier section to aid in handling. The ends of the barrier sections are equipped with single-pin connections that mate with the ends of the longitudinal support members. These connections are designed to allow 180 degrees of yaw and nominal amounts of pitch and roll.

The barrier section is towed to and from the work zone by using a detachable transport dolly (Figure 10). Fabrication details of the transport dolly frame are presented in Figures 11 and 12. The barrier section is loaded and unloaded onto the transport dolly by alternatively using the two barrier section screw jacks. An experienced crew of two men can load or unload the barrier section in 15 min or less. When not in use, the transport dolly is connected to an auxiliary hitch point on the rear of the front truck.

PERFORMANCE CRITERIA

Performance criteria for guardrails, traffic barriers, and other types of highway appurtenances are presented in NCHRP Report 230 (2). The criteria presented in this paper are the result of a consensus involving interested experts and professionals. Although it is not explicitly stated, the primary use of NCHRP Report 230 has been to establish performance criteria for permanent appurtenances.

The proposed portable maintenance barrier is not intended to be permanently deployed. Therefore, it is not exposed to the continual risk associated with a permanent barrier. Further, it must be recognized that maintenance workers are currently working with little or no protection. These factors combine to suggest that it is reasonable to employ performance criteria that are less stringent than those presented in NCHRP Report 230 (2).

The criteria for permanent guardrail installations presented in NCHRP Report 230 are intended to evaluate the following three principal performance factors: structural adequacy, occupant risk, and vehicle after-collision trajectory (2). Permanent guardrail installations must be designed to safely redirect a 4,500-lb (2043-kg) automobile traveling

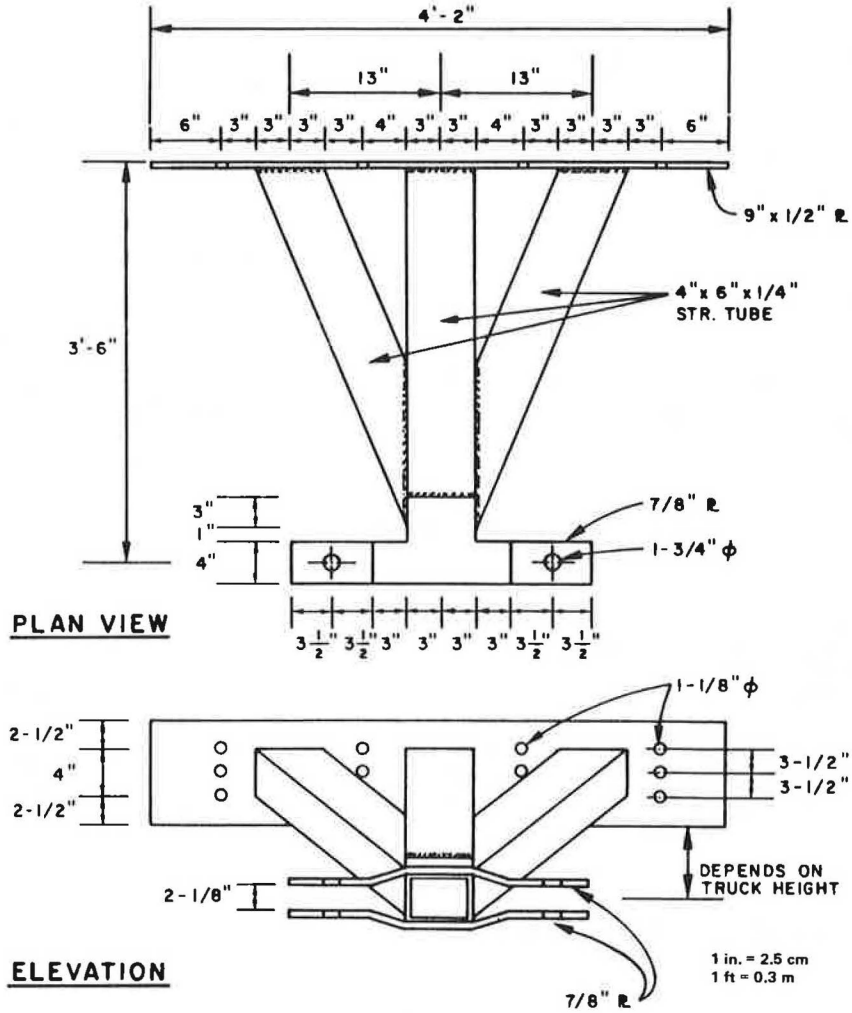

FIGURE 5 Fabrication details of side hitches.

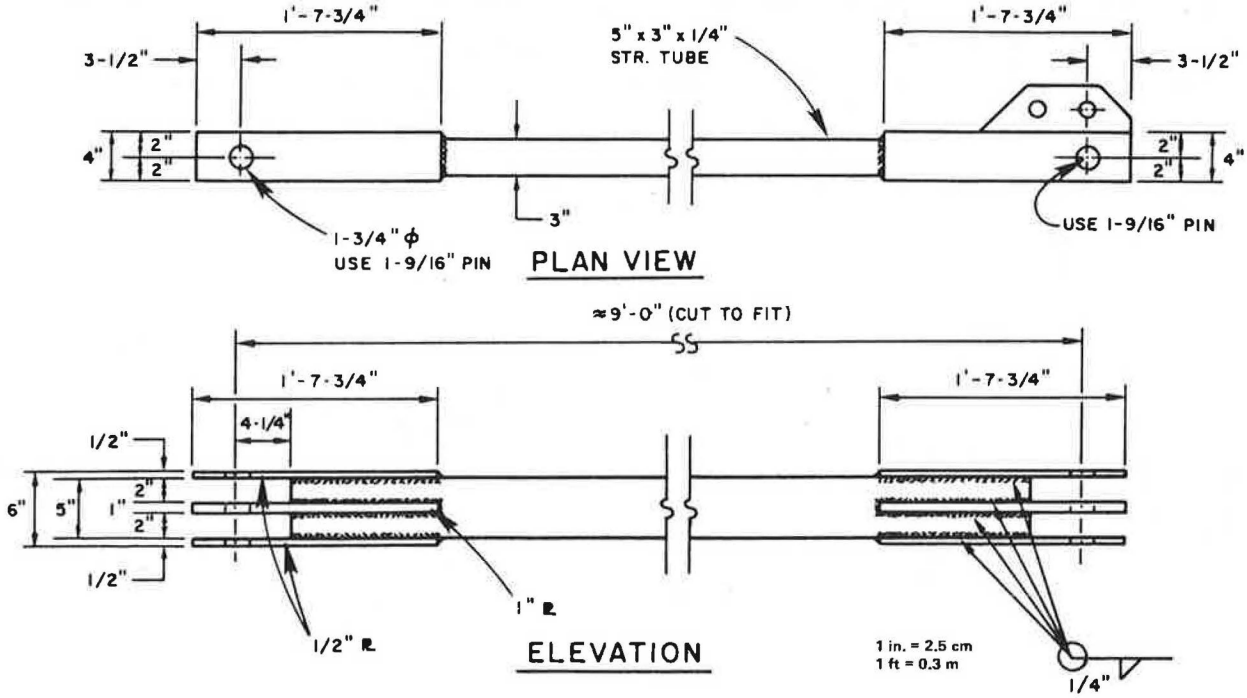

FIGURE 6 Fabrication details of longitudinal support members.

at 60 mph (96.6 km/hr) and impacting at an angle of 25 degrees. In addition, permanent guardrail installations should be able to smoothly redirect compact automobiles [2,250 and 1,800 lb (1022 and 812 kg)] traveling at 60 mph and impacting at an angle of 15 degrees. The first criterion establishes the required strength of the barrier and evaluates the occupant risk factors. The second criterion evaluates the barrier's potential for destabilizing errant automobiles.

On the basis of discussions with engineers from the Texas State Department of Highways and Public Transportation (SDHPT) and the judgments of researchers at the Texas Transportation Institute

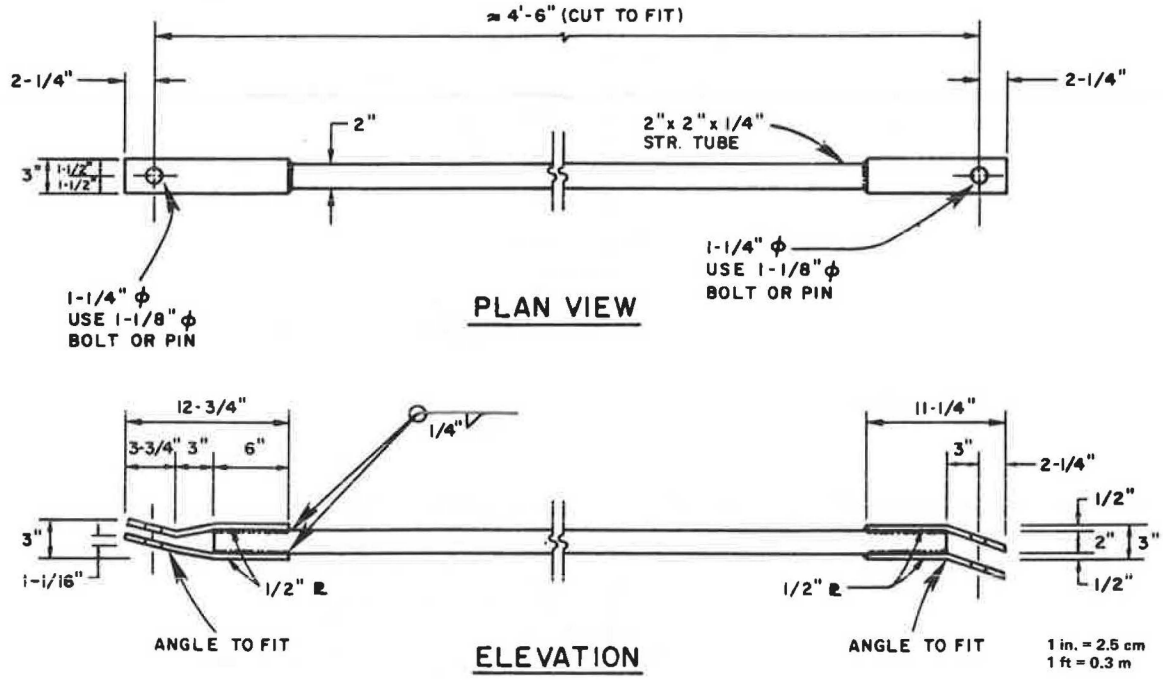

FIGURE 7 Fabrication details of lateral support members.

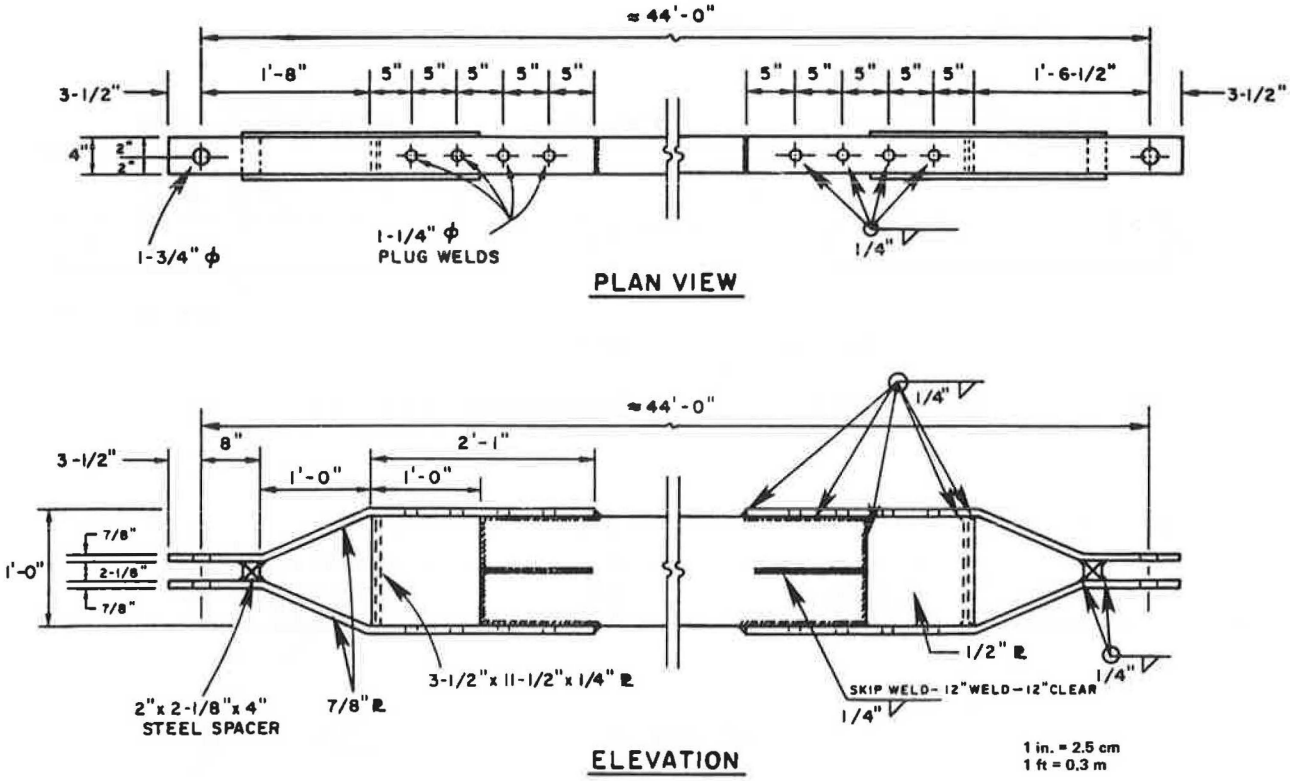

FIGURE 8 Fabrication details of barrier section.

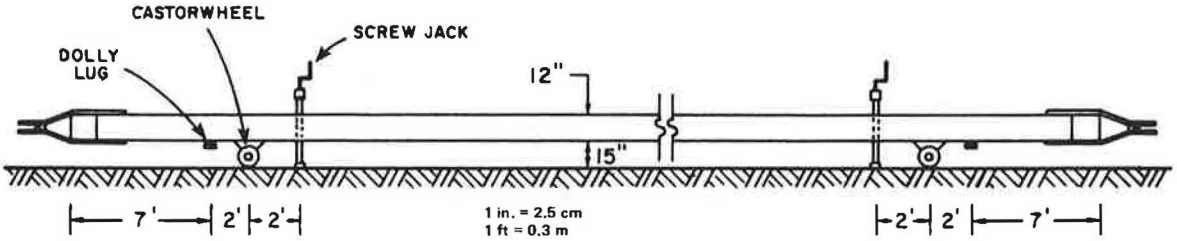

FIGURE 9 Side view of barrier section.

FIGURE 10 Barrier section on transport dolly.

(TTI), the following performance criteria were established for the truck-mounted portable maintenance barrier. It was designed to redirect a 4,500-lb automobile with a velocity of 50 mph (80.5 km/hr) and an impact angle of 15 degrees. The destabilizing potential of the portable maintenance barrier was evaluated by using an 1,800-lb automobile traveling at 50 mph and impacting at an angle of 15 degrees.

TEST RESULTS

Three full-scale crash tests were conducted on the truck-mounted portable maintenance barrier. The purpose of the tests was to establish the redirective capabilities of the barrier section and to determine its destabilizing effect on compact cars. The impact point in all of the tests was loaded one-third of the length of the barrier section ahead of the rear support truck to maximize the flexural loading on the barrier section. The authors recognize that direct impact into the support trucks would be much more serious for the errant vehicle than an impact on the barrier. However, it is their

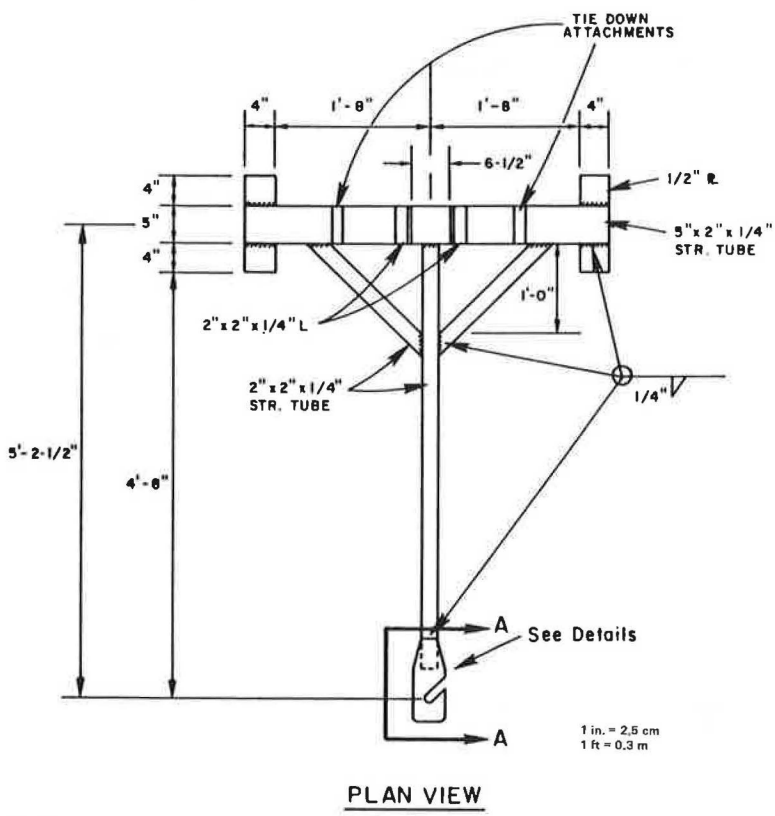

FIGURE 11 Transport dolly: plan view.

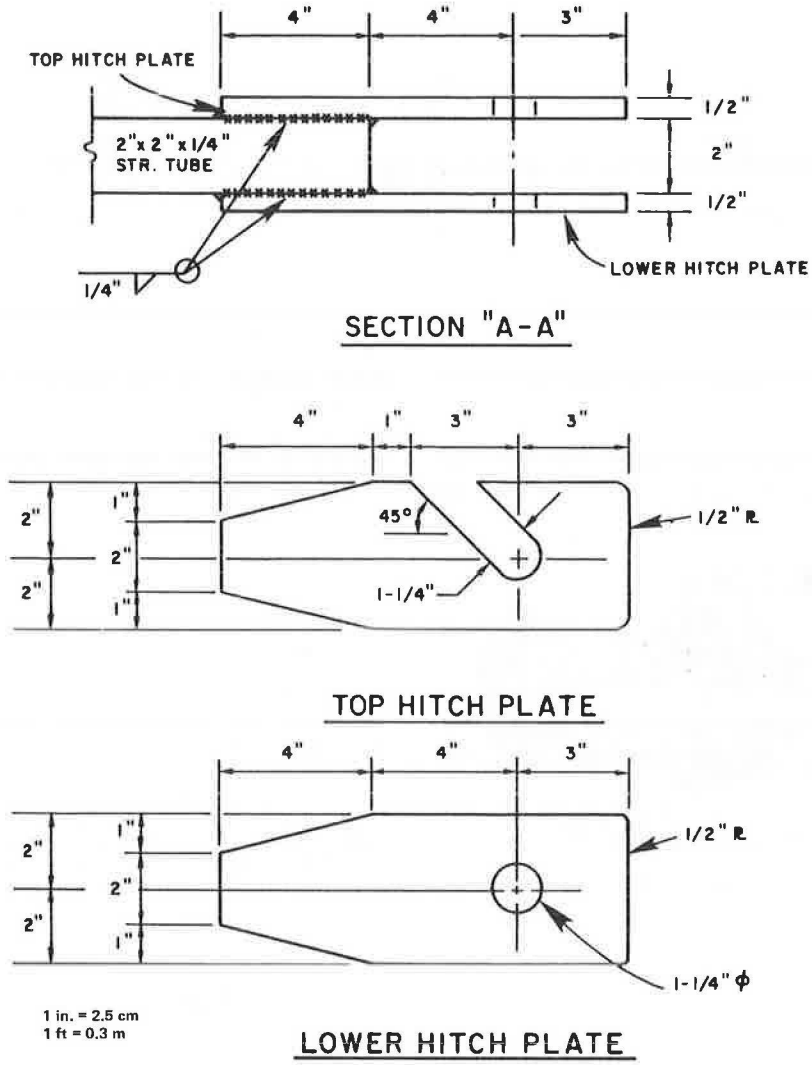

FIGURE 12 Transport dolly: fabrication details.

opinion that such an impact would not be any worse than an impact with a free-standing maintenance vehicle. It is recommended that one of several different types of rear crash cushions be towed behind the rear support truck to reduce the consequences of such a crash.

Table 1 presents a summary of pertinent test statistics. The tests were conducted in order of increasing severity. Complete photographic and accelerometer data are presented elsewhere (3). In addition, tests were conducted to evaluate the maneuverability of the barrier. Short discussions of both the strength and maneuverability tests are presented in the following paragraphs.

TABLE 1 Crash Test Summary

	Test		
	1	2	3
Vehicle weight (lb)	4,500	1,765	4,500
Impact speed (mph)	50.9	50.9	49.7
Impact angle (degrees)	7.3	14.0	15.0
Exit angle (degrees)	0.5	1.3	1.0
Barrier displacement (in.)	11.2	13.0	24.0
Occupant impact velocity (ft/sec)			
Longitudinal	6.7	11.3	10.0
Lateral	0	0	0
Occupant ridedown acceleration (g)			
Longitudinal	0.87	1.58	1.34
Lateral	0	0	0
Vehicle damage classification			
Traffic Accident Data	2-RFQ-1	2-RFQ-2	2-RFQ-2
Vehicle Damage Index	02RFMW5	02RFMW6	02RFMW[illegible]

Note: 1 lb = 0.45 kg; 1 mph = 1.61 km/hr; 1 in. = 2.5 cm; 1 ft/sec = 0.3 m/sec.

Full-Scale Crash Tests

In Test 1 a 4,500-lb automobile impacted the barrier with a velocity of 50.9 mph (82.0 km/hr) at an angle of 7.3 degrees. The automobile was smoothly redirected with relatively minor damage. The barrier section sustained 1/2 in. (1.22 cm) of permanent lateral deflection.

In Test 2 a 1,765-lb automobile impacted the barrier with a velocity of 50.9 mph at an angle of 14.0 degrees and was smoothly redirected with relatively minor damage. The barrier section sustained an additional 1/2 in. of permanent lateral deflection.

In Test 3 a 4,500-lb automobile impacted the barrier with a velocity of 49.7 mph (80.0 km/hr) at an angle of 15.0 degrees and was smoothly redirected with only moderate damage. The barrier section sustained an additional 3 in. (7.62 cm) of permanent lateral deflection.

Damage to the impacting vehicles in all three tests consisted of sheet metal damage on the right side and damage to the right front tire and rim. Figure 13 shows the damage done to the vehicle in Test 3 (the most severe impact). The sheet metal damage was the result of contact between the automobile and the barrier section. The damage to the right front wheel occurred when it hit the barrier section support caster as the automobile slid along the barrier section. This occurred because the caster pivoted outward into the wheelpath as the barrier section underwent lateral deformation. This phenomenon occurred in all three tests; however, the failure of the tire and rim did not destabilize the impacting vehicles. It should be noted that following Test 3, the vehicle spare tire was mounted on the right front of the car, which allowed the vehicle to be operated at low speeds. In all instances the measured occupant risk values defined in NCHRP Report 230 were below recommended values.

The same barrier section was used in all three tests with no intermediate repair or straightening. The only damage experienced by the barrier was permanent lateral deflection. On completion of the third test the barrier section had an accumulated lateral deflection of 4 in. (10.2 cm), as shown in Figure 14. The permanent lateral deflection of the barrier section in no way interfered with transport of the barriers. The support trucks, hitches, and support members survived the tests with no damage.

FIGURE 13 Damage to automobile in Test 3.

Figure 14 Accumulated damage to barrier section in Tests 1, 2, and 3.

Maneuverability Tests

In addition to the three crash tests, maneuverability tests were conducted with the truck-mounted portable maintenance barrier. It was found that the barrier section mounted on the transport dolly and hitched to the center of the lead truck for highway transport had handling characteristics similar to those of a tractor-trailor rig of similar length. There were no special problems noted by the drivers in maneuvering the system set up in this fashion.

The fully deployed system (Figure 1) consisting of both trucks, the barrier section, and two drivers had a surprising amount of maneuverability with forward speeds up to 15 mph (24.15 km/hr). When the barrier is deployed in this fashion, the lead truck provides the power. The forward thrust is transferred through the barrier section to the rear truck whose transmission is in neutral. The driver in the lead truck is responsible for controlling the application of power and braking. The responsibility of the driver in the rear truck is to guide the rear truck along the desired path. The only constraint on maneuverability is that the trucks are forced to remain a constant distance apart.

In addition to the general maneuverability tests, the following test was conducted to simulate maneuverability around an obstacle in the work zone. A section of pavement 30 ft (9.15 m) long was marked off between the trucks to simulate an obstacle such as an area of pavement under repair, as shown in Figure 15. Then it was shown that the trucks and barrier can be steered around the 30-ft repair zone without encroaching on it. The maneuverability of the portable maintenance barrier around such obstacles is hindered only by the handling characteristics of the rear truck.

CONCLUSIONS

Recent experiences with injuries and fatalities among SDHPT maintenance personnel suggest that there is a need for increased personnel protection in short-term work zones. One way to reduce the risks

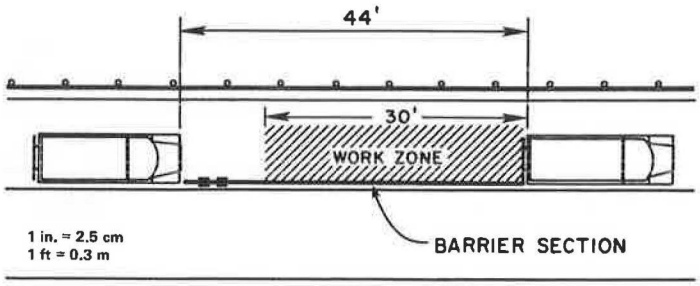

FIGURE 15 Barrier configuration for maneuverability test.

is to use portable maintenance barriers. The problem is that most available portable maintenance barriers require too much set-up time or too much work-zone space. The truck-mounted portable maintenance barrier overcomes both of these difficulties.

The truck-mounted portable maintenance barrier consists of a steel barrier section supported between two trucks. The barrier section was designed to smoothly redirect a 4,500-lb automobile impacting at a velocity of 50 mph and an angle of 15 degrees. These design criteria reflect a consensus among SDHPT and TTI engineers for a portable maintenance barrier. Results of three crash tests conducted on the prototype substantiated that the barrier section can successfully redirect the design impact.

It is clear that if an errant vehicle directly impacts either of the support trucks, the outcome would not be as favorable. However, it is the authors' contention that such an impact would be no more severe than an impact with any other maintenance vehicle. It is recommended that normal procedures involving the use of towed crash cushions and proper delineation of the work-zone hazard be used with the truck-mounted portable maintenance barrier.

The barrier is towed to the work zone on a specially fabricated transport dolly. Experience with the system shows that the barrier can be deployed by an experienced team of two men in less than 15 min. In addition, tests show that the deployed portable maintenance barrier can be easily maneuvered around obstacles that might be encountered in a work zone.

The approximate cost of the barrier system exclusive of the cost of the trucks is $8,000 for a 44-ft (13.42-m) barrier section. This translates to an approximate cost of $182 per foot ($596 per meter). A substantial portion of the fabrication cost is involved in the construction and installation of hitches, support members, and the truck frame plate. However, in the event of a design impact, only the barrier section will have to be replaced or repaired. Therefore, the economics of the system appear to be favorable.

A second version of the portable maintenance barrier has been constructed and delivered to the Houston are a SDHPT office, which plans to put it into service shortly. It is hoped that the system can be easily integrated into routine operations and help to reduce maintenance personnel injuries and fatalities.

ACKNOWLEDGMENTS

This research study was conducted under a cooperative program between the Texas Transportation Institute, the Texas State Department of Highways and Public Transportation, and FHWA. David Hustace, Hunter F. Garrison, and William V. Ward of SDHPT worked closely with the researchers, and their comments and suggestions are appreciated.

REFERENCES

1. D.L. Ivey, H.E. Ross, T.J. Hirsch, C.E. Buth, and R.M. Olson. Portable Concrete Median Barriers: Structural Design and Dynamic Performance. In Transportation Research Record 769, TRB, National Research Council, Washington, D.C., 1980, pp. 20-30.
2. J.D. Michie. Recommended Procedures for the Safety Performance Evaluation of Highway Appurtenances. NCHRP Report 230. TRB, National Research Council, Washington, D.C., March 1981.
3. W.L. Beason and H.E. Ross. Development of a Truck-Mounted Portable Maintenance Barrier. Research Report 2262-5. Texas Transportation Institute, Texas A&M University, College Station, May 1984.