Natural Fiber Reinforced Concrete

R. SETHUNARAYANAN, S. CHOCKALINGAM, AND R. RAMANATHAN

In recent years, several investigations have been reported on the strength and behavior of concrete reinforced with natural fibers. Since natural fibers are available in abundant quantities in many developing countries, more elaborate research should be directed toward the various problems associated with the use of these fibers. This paper presents a critical review of the factors that affect the properties and behavior of natural fiber reinforced concrete (NFRC). Test results for concretes obtained by using water blended with yeast granules are also reported in this paper.

During the past two decades, there has been considerable interest in the study of fiber reinforced concrete and its applications to several types of structures. Most of the studies have been concerned with concrete reinforced with steel, glass, or other synthetic fibers, and adequate literature regarding their manufacture, handling, structural applications, and performance is available.

The manufacture of synthetic fibers is quite expensive and consumes considerable energy. It is in this context that low modulus natural fibers, which are readily available in many parts of the world, could be put to their best advantage, particularly in the production of building components. Because of the acute shortage of essential building materials, coupled with low income, unemployment, and a high increase in the population growth, millions of people in many developing countries do not have proper shelter. Providing proper shelter for the masses remains a real challenge to all associated with the planning and execution of various housing schemes (*1*).

Roofs, floors, and walls form the major load-carrying structural components of a building. While concrete can be used, it makes the construction very expensive and sometimes difficult, particularly in the construction of low-cost houses for the poor. In rural areas, roofs are traditionally made from straw, palm leaves, grass, or coconut thatch. These types of roofs not only need frequent replacement but are seldom water tight. They are also easily infested and are not fire resistant. Provision of such roofs in rural areas is not safe, particularly during disputes among the people. Asbestos cement sheets and corrugated steel sheets provide a better substitute but are again expensive and also are not suitable for tropical regions. The use of burnt clay tiles where timber is scarce requires additional structures consisting of purlins and rafters, which increases the cost of roofing. Roofs with clay tiles are also not suitable for resisting earthquakes.

Natural vegetable fibers have long been used for reinforcing clay and mud, and the properties of plain concretes are improved by the introduction of these fibers at the time of making concrete. Several studies have been reported on the mechanical properties, structural behavior, and possible applications of natural fibers in buildings. To identify the various problems associated with the use of natural fibers, a joint research project was initiated by the Department of Building Frame Works at the Royal Institute of Technology in Stockholm, Sweden, in collaboration with the Government of Tanzania. A comprehensive report has been published (*2*) on the various problems associated with the use of two types of natural fibers (sisal and coconut fibers) for the manufacture of roofing sheets.

Department of Structural Engineering, Annamalai University, Annamalainagar 608 002, India.

NATURAL FIBER REINFORCED CONCRETE (NFRC)

The use of natural fibers in making concrete is recommended since several types of these fibers are available locally and are plentiful. The idea of using such fibers to improve the strength and durability of brittle materials is not new; for example, straw and horse hair are used to make bricks and plaster. Natural fibers that are suitable for reinforcing concrete and are easily available in developing countries can be broadly classified as shown in Figure 1.

Wood fibers have been attempted as reinforcement in cement concrete productions. Hast fibers include hemp, flax, and ramie. These fibers are reported to be stronger than other vegetable fibers and possess a higher modulus of elasticity. Among the leaf fibers, sisal is one of the most important and widely used and is plentiful in many tropical countries. Among the seed and fruit fibers, coconut or coir is reported to be the most suitable for concrete. Previous studies have been concerned with the use of sisal and coconut fibers in making corrugated roofing sheets and ribbed or folded plates. Fibers derived from palm trees are considered to be stronger than coconut fibers, and a detailed investigation of their use is worth pursuing. The use of bamboo fibers also needs to be investigated. Many types of bamboos are available in tropical countries, and their fibers may be suitable as reinforcement in concrete products. It is reported that the mechanism for metallic fiber reinforcements are also valid for natural fibers. Experimental investigations reported from Bangaladesh (*3*) indicate that the addition of jute and coconut fibers decreases the compressive strength and increases only slightly the tensile strength of the concrete composites.

Few studies have been reported on the long-term behavior of natural fiber reinforced concrete beams. Singh (*4*) reported that the useful life of such beams increases when subjected to cyclic loading and that the method of mix proportioning of natural fiber needs to be standardized.

After conducting several tests on slabs reinforced with coconut coir fibers, Paramasivam et al. (*5*) concluded that the strength of the slabs is comparable to that of asbestos cement sheets. They have, therefore, recommended the use of such slabs in housing.

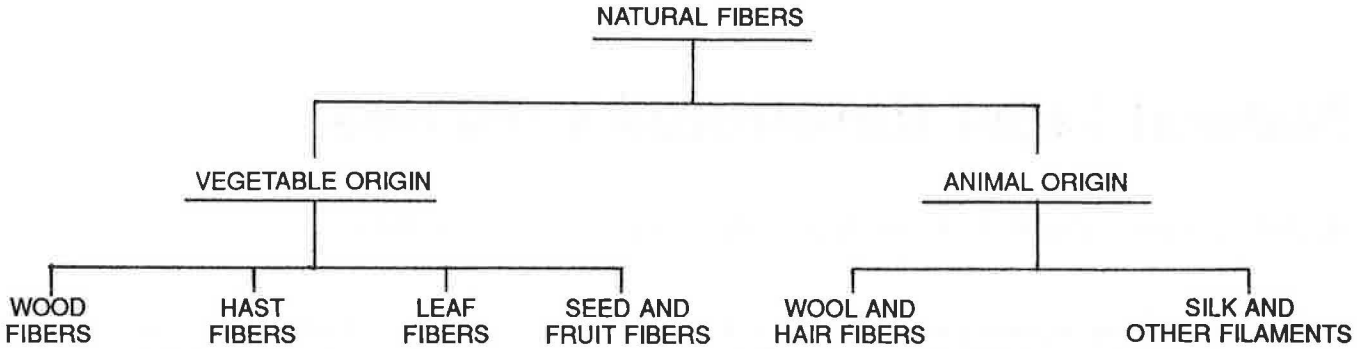

FIGURE 1 Classification of natural fibers.

BAMBOO FIBERS

Pakotiprapah et al. (*6*) studied the mechanical properties of cement composites made out of bamboo fibers, both experimentally and theoretically. The fibers used were extracted by hammering short bamboo sticks.

While most of the studies have been concerned with the mechanical properties of NFRC obtained from short-term tests, Gram et al. (*7*) conducted durability tests on several samples, which were tested after 360 days and 540 days. To prevent the decay of fibers, the partial replacement of cement with rice husk ash has been recommended. Since the strength and stiffness of natural fiber concrete reduces with time, adequate precautions should be taken when using natural fibers.

Among the various studies reported on the use of natural fibers in concrete, the results reported from Sweden (*2*) could be regarded as the first systematic study on these fibers. The factors that affect the properties of NFRC are given in Table I. A typical stress-strain curve for natural fibers is shown in Figure 2.

When used as roofing sheets, the allowable crack width is not recommended in any design guideline. Hence, suitable design guidelines have to be established.

TABLE 1 FACTORS AFFECTING PROPERTIES OF NATURAL FIBER REINFORCED CONCRETE

Factors	Variables
Fiber type	Coconut, sisal, sugarcane, bagasse, bamboo, jute, wood and vegetables, canes, skin from trunk
Fiber geometry	Length, diameter, cross section, rings, and hooked ends
Fiber form	Mono-filament, strands, crimped, and single-knotted
Fiber surface	Smoothness, presence of coatings
Matrix properties	Cement type, aggregate type and grading, additive type
Mix design	Water content, workability aids, defoaming agents, fiber content
Mixing method	Type of mixer, sequence of adding constituents, method of adding fibers, duration and speed of mixing
Placing method	Conventional vibration, vacuum dewatering, sprayed-up concrete member, extrusion, and guniting
Casting technique	Casting pressure
Curing method	Conventional, special method

OTHER FIBERS

While many investigators have studied the behavior of concrete reinforced with such fibers as coir and sisal, Ramanathan et al. (*8*) recently reported the results of their study on yeast fiber concrete. The addition of yeast was found to improve both the mechanical properties and workability of concrete.

Yeast (fungi) belongs to the Ascomycetes class of the plant kingdom. This microorganism has a peculiar property of reproduction by means of bud formation. It is a unicellular organism with a smooth, gelatinous cell membrane. A single yeast cell becomes doubled, then tripled, and all the cells thus reproduced orient along almost straight chain lines. These chain-like interlinks act as "elastic fibers" or wires, making connective bonds with every contour terminal of the concrete mass; hence the name "yeast fiber reinforced concrete."

All the tests on yeast fiber concrete were conducted at the Structures Laboratory of the Annamalai University. For a total concrete mass of 14 kg (having 2 kg of cement in a 1:2:4

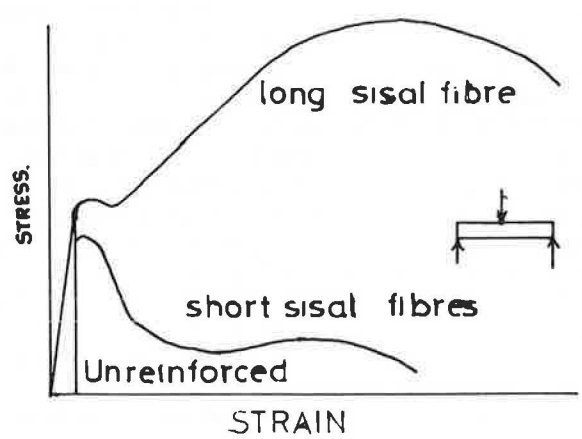

FIGURE 2 Typical stress-strain curves for natural fiber concrete.

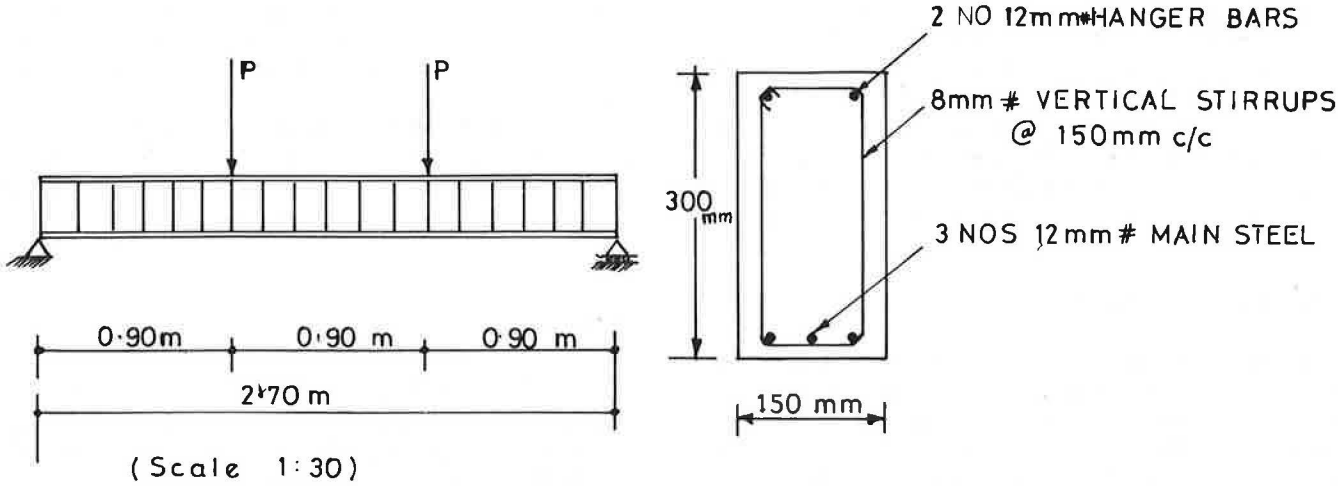

FIGURE 3 Details of cross section and loading of reinforced concrete beams.

TABLE 2 COMPARISON OF STRENGTH PROPERTIES OF PURE WATER CONCRETE WITH WBY-MADE CONCRETE (*8*)

Properties	Number of Days	Percentage Increase in Strength for WBY-Made Concrete
Tensile strength	3	16
Tensile strength	7	12
Compressive strength	7	7.5
Compressive strength	28	6.77

TABLE 3 COMPARISON OF FLEXURAL STRENGTH OF PURE WATER CONCRETE AND WBY-MADE CONCRETE (*8*)

Test Beams Number	Effective Span	Cracking Load (tons)	Ultimate Load (tons)
1[a]	2.7	0.82	3.62
2[a]	2.7	0.82	3.552
3[b]	2.7	1.43	4.03
4[b]	2.7	1.23	4.098

[a]RC beam made with pure water.
[b]RC beam made with WBY.
Percentage increase in cracking load = 62
Percentage increase in ultimate load = 13

concrete), the amount of yeast granules added was only about 10 g. The following tests were conducted to determine the various properties of yeast fiber concrete:

- Compression test,
- Tension test,
- Consistency and setting time tests,
- Slump test,
- Vee-bee degree test, and
- Flexural test.

The consistency and setting time tests were performed using a Vicats apparatus. From a total of 72 briquettes, 36 samples were made out of water blended with yeast (WBY) and another 36 samples were made with pure water. The samples were cast under identical laboratory conditions. The ratio of cement to fine aggregate was 1:3, and the water added was 8 percent of the total weight of the dry mix in both cases. Out of 36 briquettes made from WBY, 18 were tested for tension at the end of 3 days and another 18 after 7 days. Curing was done by keeping all the samples immersed in water. For the compression test, concrete cubes (10 cm size) were cast and tested after 7 days and 28 days. Yeast-blended water was also used for casting two reinforced concrete (RC) beams, and the beams were tested under two-point loading as shown in Figure 3.

The normal consistency of the cement pastes made out of WBY increased by only 1 percent, but there was not much difference in the initial setting time of these pastes.

As shown in Table 2, the tensile strength of cement mortar briquettes made with WBY had increased by 16 percent at the end of 3 days; in the 7-day test, the tensile strength of these briquettes increased by 12 percent.

Table 2 shows that the compressive strength of concrete cubes made with WBY had increased by 7.5 percent after 7 days and by 6.77 percent after 28 days. The increase in tensile strength could be attributed to the presence of yeast chain links acting as fibers.

The experiments for measuring workability also provided encouraging results. For the same water/cement ratio, the slump obtained for the concrete made with WBY was more than that made with pure water. Increased slump value and better workability can be achieved by adding yeast to the normal quantity of water used for making concrete.

In the vebe tests, the concrete made with WBY showed better flow property than that made with pure water; the other conditions remained the same. The increase in workability can be attributed to the presence of gelatinous cell membranes, which act as lubricants inside the mass of concrete.

Table 3 compares the measured values for the cracking and ultimate loads for the beams made using pure water and those made with WBY. The cracking load increased by 62 percent

and the ultimate load increased by about 13 percent in the beams made with WBY. The load-deflection behavior for yeast-blended beams also showed a definite increase in the stiffness of the beams.

It should be mentioned that the name yeast fiber reinforced concrete was chosen since the yeast cells develop in the form of a chain. This chain-like formation has been referred to as fiber even though these fibers cannot be seen by unaided eyes.

CONCLUSIONS AND RECOMMENDATIONS

- While there has been considerable research relating to steel fiber reinforced concrete elements, few attempts have been made to study the behavior of structural elements made out of natural fibers. Only limited types of fibers have been tried; hence, more investigations are needed on the behavior of structural elements made from all available types of natural fibers, including bamboo fibers, palm tree fibers, and canes.
- Most of the vegetable fibers, when dried, lose their moisture. To achieve better results, the presence of certain amounts of moisture is necessary, and this aspect needs further study.
- The effect of creep and cyclic reversal of stresses on NFRC should be investigated.
- The use of NFRC in the construction of shell-type roofs should be explored.
- The use of natural fibers should be popularized. All problems associated with the extraction of fibers, such as mix design, casting, curing, placing, and transportation, should be investigated and a code of practice formulated.
- A major disadvantage in using natural fibers is that the fibers will decay over time and the composite will lose its strength, resulting in sudden brittle failure. Hence, proper treatment of the fibers before mixing may be necessary. To increase durability, partial replacement of ordinary portland cement by rice husk ash or silica fume is recommended. Other types of admixtures, such as resins and gums, can be tested to prevent decay of natural fibers that have been embedded in concrete.
- The problem of providing proper housing should be treated as a global issue. It can be solved only through research and the transfer of technology and resources (*9*). The efforts of the Government of Sweden in this direction are applauded.

REFERENCES

1. *Proc., National Seminar on Housing for the Rural Poor in India*, Annamalai University, India, 1985.
2. H. K. Gram, H. Person and A. Skarendahl. *Natural Fibre Concrete*. Report R2:1984. Swedish Agency for Research Cooperation With Developing Countries, Sweden.
3. R. Islam and A. K. M. K. Alam. Study of Fiber Reinforced Concrete With Natural Fibres. *Proc., ISFRC*, Vol. II, Madras, India, 1987.
4. R. N. Singh. Flexural Behaviour of Notched Coir Reinforced Concrete Beam Under Cyclic Loading. *Proc., ISFRC*, Vol. II, Madras, India, 1987.
5. P. Paramasivam, G. K. Nathan and N. C. Das Gupta. Coconut Fibre Reinforced Corrugated Slab. *The International Journal of Cement Composite and Light Weight Concrete*, Vol. 6, No. 1, Feb. 1984.
6. B. Pakotiprapah, R. P. Pama and S. L. Lee. Behaviour of Bamboo Fibre Cement Paste Composite. *Journal of Ferro-cement*, Vol. 13, No. 3, July 1983.
7. H. E. Gram and P. Nimityongskul. Durability of Natural Fibre in Cement-Based Roofing Sheets. *Journal of Ferro-Cement*, Vol. 17, No. 4, Oct. 1987.
8. R. Ramanathan, S. Chockalingam and R. Sethunarayanan. Yeast Fibre Reinforced Concrete. *Proc., ISFRC*, Vol. II, Madras, India, 1987.
9. S. Chockalingam. A New Technology for Rural Development. *Proc., National Seminar on Housing for the Rural Poor in India*, Annamalainagar, India, 1985.