Innovations Deserving
Exploratory Analysis Programs

Transit IDEA Program

Apparatus for Gap Management

Final Report for
Transit IDEA Project 74

Prepared by:
Thomas O. Boucher
Rutgers University

September 2015

TRANSPORTATION RESEARCH BOARD
The National Academies of
SCIENCES · ENGINEERING · MEDICINE

Innovations Deserving Exploratory Analysis (IDEA) Programs Managed by the Transportation Research Board

This IDEA project was funded by the Transit IDEA Program.

The TRB currently manages the following three IDEA programs:

- The NCHRP IDEA Program, which focuses on advances in the design, construction, and maintenance of highway systems, is funded by American Association of State Highway and Transportation Officials (AASHTO) as part of the National Cooperative Highway Research Program (NCHRP).
- The Safety IDEA Program currently focuses on innovative approaches for improving railroad safety or performance. The program is currently funded by the Federal Railroad Administration (FRA). The program was previously jointly funded by the Federal Motor Carrier Safety Administration (FMCSA) and the FRA.
- The Transit IDEA Program, which supports development and testing of innovative concepts and methods for advancing transit practice, is funded by the Federal Transit Administration (FTA) as part of the Transit Cooperative Research Program (TCRP).

Management of the three IDEA programs is coordinated to promote the development and testing of innovative concepts, methods, and technologies.

For information on the IDEA programs, check the IDEA website (www.trb.org/idea). For questions, contact the IDEA programs office by telephone at (202) 334-3310.

IDEA Programs
Transportation Research Board
500 Fifth Street, NW
Washington, DC 20001

ACKNOWLEDGMENTS

Martin Robbins and Bob Noland of the Voorhees Transportation Center of Rutgers University were early supporters of the modified trap door concept for managing the gap and funded our first laboratory model. We were greatly assisted in its further development by Bill Schneider and his staff at the Physics Machine Shop of Rutgers University. Their machining skill was invaluable for insuring that the unique designs we were proposing were manufactured so that they functioned as expected. We thank our technicians in the Industrial Engineering laboratory, Joe Lippencott and Bill Doig, for their assistance in preparing the unit for demonstrations at New Jersey Transit. Robert Lavell, General Manager of Rail Operations at NJ Transit, generously provided the resources of his agency to support this project. Finally, we were fortunate to have three experienced engineering professionals from NJ Transit to provide oversight for the project and to advise us at key points along the way. Our appreciation goes to our Expert Panel, Dak Murthy, Mark Ives, and Carlos Barrera for their enthusiastic support and advice during the project.

TABLE OF CONTENTS

EXECUTIVE SUMMARY

Current federal law sets a 3-inch maximum gap width for the distance between the entry to a railcar and the railway platform for railway platforms built after 1991 (*1*). However, according to the Federal Railroad Administration (FRA), compliance with that standard would be difficult to maintain (*2*). It has been reported that there is currently considerable variability in gap size between commuter railcars and station platforms due to a number of causes, including station platform curvature, track curvature at some stations, shifting of track position over time, safe passage of express trains moving through the station at high speeds, and differences in the widths of car bodies passing through or using the same stations when both freight and passenger trains are involved.

There have been reports of serious injuries on commuter rail lines attributed to platform gaps. Concern with gap safety problems prompted the formation of the General Passenger Safety Working Group under the FRA's Railroad Safety Advisory Committee to address the gap issue (3–5). It reviewed the data and highlighted the severity of gap problems across the country. In 2007, FRA issued the document *Approach to Managing Gap Safety*, which recommended practices that transit agencies should adopt to monitor and control gap sizes (*2*).

The Americans with Disabilities Act has also been a significant consideration in managing the impact of the gap on mobility impaired passengers (*6*). A common method of assisting passengers in wheelchairs has been the manual deployment of a portable ramp placed across the gap by transit personnel. The ramps are kept on station platforms in a locked cabinet. Their use may require the attendance of personnel at station locations and sometimes implements a call-ahead procedure to prepare station personnel. Also, conductors on trains have keys to unlock the cabinets and can secure a ramp when the train is in the station. Although this solution may be cost-effective in terms of manufacturing and maintenance cost of the equipment, it does not provide a general solution to gap elimination for all passengers.

Another approach that has recently been used on subway systems and commuter train platforms is the "gap filler" [2]. This is a fixed extension either from the sill of the train door or from the platform to close the width of the gap. Due to previously cited variations in car width, platform and track curvature, and minimum gap requirements for express trains moving through stations at high speeds, there are limits to the effectiveness of this approach.

New York City Transit has installed a series of hydraulic platform extensions to bridge the gap in certain subway stations. Here the platform is automatically extended toward the subway car in order to close the gap before loading and unloading the passengers. Platform extensions are expensive to implement and, to date, have been limited to indoor subway stations where they are not exposed to changing environmental weather conditions. They are not designed for outdoor commuter train stations. An additional difficulty with a movable platform at a commuter train station is the need for the rolling stock on-board communication system to interact with the wayside system in order to deploy and return the platform. This would be necessary to avoid additional risks of personal injury should a train strike an extended platform that has failed to retract.

The goal of this Transit IDEA project is to provide an engineered solution that would dynamically fill the gap between a commuter train and a high level platform and have safety provisions to avoid potential passenger accidents while eliminating the hazards and inconveniences of the gap. This work builds on a project funded by the Transportation Coordinating Council/Federal Transit Administration (FTA) Research Program of Rutgers University. That program was funded by the FTA's National Research and Technology Program (NRTP). Under that funding, the investigators designed and built a laboratory model of a device that could in principle replace the current trap door used aboard commuter railcars in the Northeast United States with one that could dynamically close the gap. Figure 1 shows the current trap door arrangement on a typical commuter train.

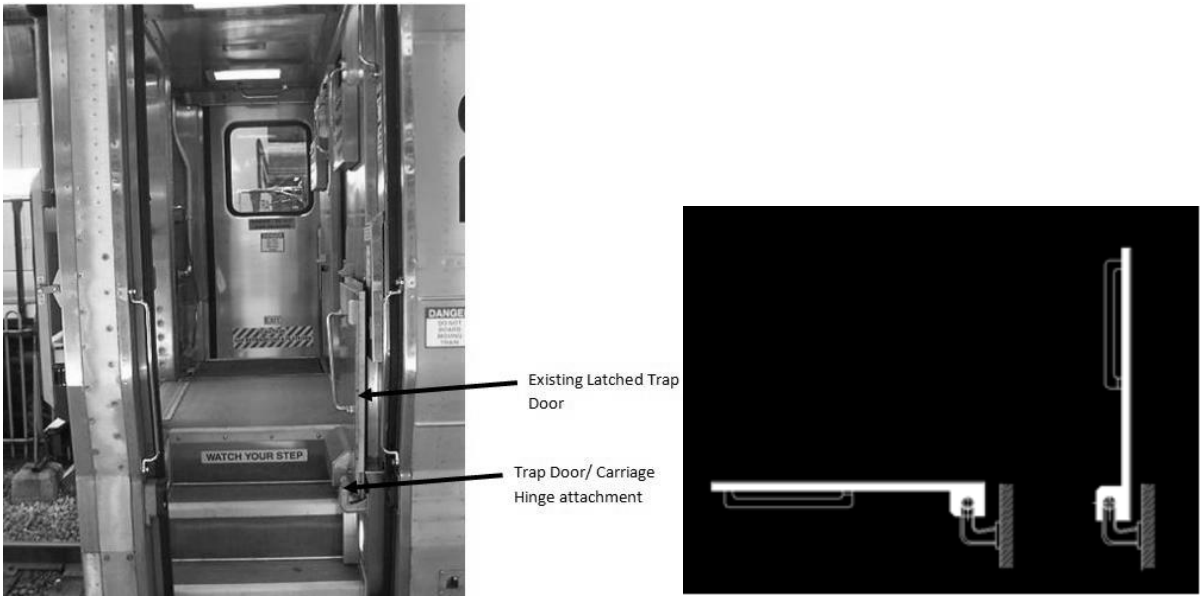

FIGURE 1 Trap door assembly aboard a commuter train and trap door positions.

The trapdoor is attached to the railcar by a hinge arrangement and a torsion bar. It can assume two positions. On the left of Figure 1 it is shown in its upright position, which allows passengers to board and depart the train between the vestibule and the track level. If the train stops at a station with a high level platform, the trap door is lowered to the horizontal position. This is shown at the right of Figure 1. In the horizontal position passengers can traverse between the train and the high level platform.

In this project we have successfully integrated a moving platform within the trap door. The design concept is shown in Figure 2. When the train is stopped at a high level platform, a bridge is extended from the trap door across the gap to provide a surface for wheelchairs as well as protection against passengers being injured by stepping into the gap. In addition, passengers are often moving luggage on wheels off and onto trains. This apparatus makes it easier for them to move these items across the gap. Also, a sensor on the apparatus allows the measurement of the amount of forward movement of the slide as the extending bridge closes the gap. In this way it provides real-time data on the size of the gap at a station that can be captured by the communication network of a railcar when implemented on a modern railcar system.

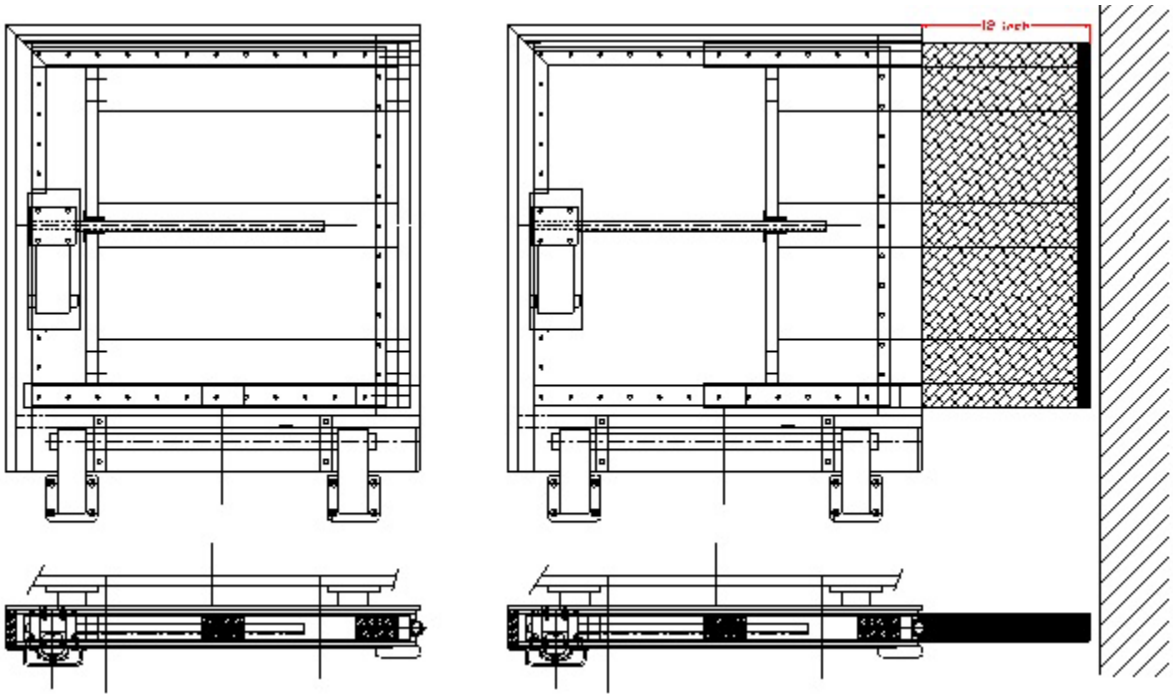

FIGURE 2 (*left*) Trapdoor with fully retracted slide and (*right*) the trapdoor with fully extended slide to bridge the gap between the railcar and the high level platform.

These innovations provide unique features that are not currently available on commuter trains. This project successfully completed the design, construction, testing, and demonstration of this product. The final apparatus design can be used to retrofit existing railcars and the design concept can be integrated into the design of new vehicles.

IDEA PRODUCT

The purpose of this project is to design, build, and test an apparatus that can provide safe passage for passengers over the gap between a high level platform and a commuter train. It applies to commuter trains that use a trap door to accommodate both high level platform and ground level traffic. The proposed apparatus will dynamically bridge the gap and provide three functions: (1) easy access for mobility-impaired passengers, (2) protection against slip and fall injuries for all passengers, and (3) automatic data acquisition of actual gap widths in order to alert maintenance personnel of track movement or other anomalies in accordance with the FRA approach to managing gap safety.

The product replaces the existing trap door currently used aboard commuter trains with a new trapdoor of the same footprint, but with an integrated moving slide that automatically covers the gap when passengers are entering and exiting the train. The unit incorporates a motor drive that is compatible with the railcar power supply, sensors to ensure safe operation, and a magnetic pulse sensor mounted on a rotary actuator for measuring the length of the extension before contact with the platform, thus measuring the gap width.

CONCEPT AND INNOVATION

The primary innovation is a safe and reliable apparatus that can coordinate the covering of the gap with the passenger traffic on and off the train. Figures 3 through 5 show the testing of the unit aboard an Arrow III commuter train in the NJ Transit maintenance facility. In Figure 3, the apparatus is in the retracted position as it would be before the commuter train has entered a train station. When stopped in a train station and while the train door is still closed, the control system commands the bridge to extend until it reaches the platform or until it reaches its maximum extension (Figure 4). Sensors on the front of the bridge stop the forward movement if the platform is reached. If a passenger on the platform should place a body part between the platform and the extending bridge, the bridge will also cease forward movement. The device has been designed to be safe for use by the traveling public. Note in Figure 4 that the train door is closed until the bridge has completed its full extension. Finally, in Figure 5, the door is opened and passengers are allowed to traverse the gap over the bridge plate. After passenger traffic has ceased, the control system reverses the sequence, closing the door first and then retracting the bridge plate to the position shown in Figure 3. The apparatus is equipped with a sensor that can monitor forward movement of the bridge and provide data on the actual gap width between the train and the platform.

FIGURE 3 Innovative trap door in the retracted position.

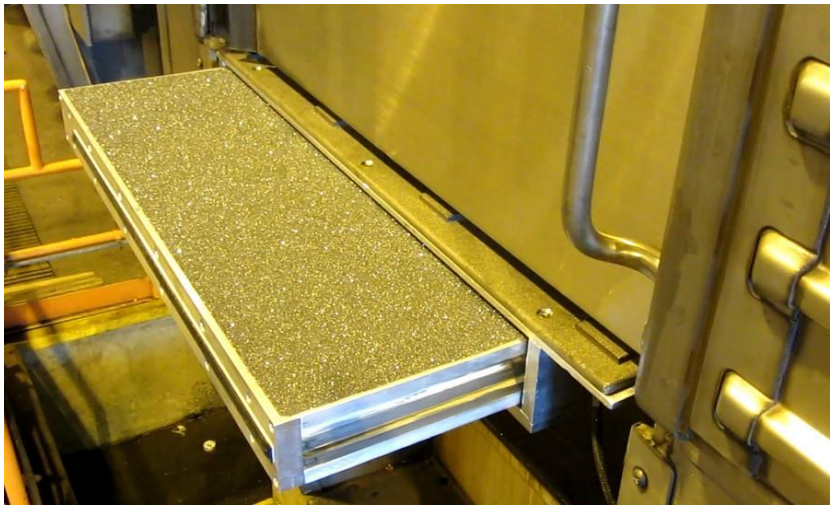

FIGURE 4 Innovative trap door being deployed before passenger movement is allowed.

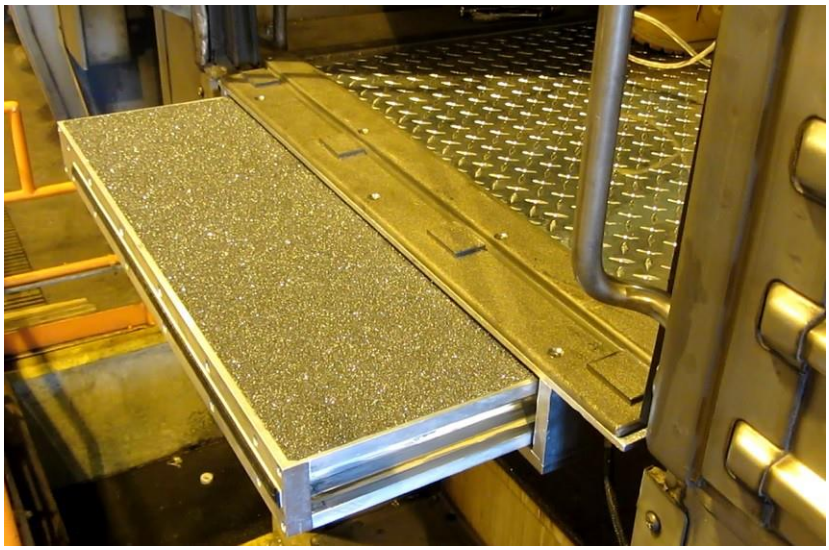

FIGURE 5 Innovative trap door in deployed position with passenger movement allowed.

The project testing of the apparatus was done in the NJ Transit maintenance yard and in the Automation Laboratory of the Industrial & Systems Engineering Department at Rutgers University. Testing aboard the Arrow III commuter train demonstrated that the unit performs as designed in terms of fitting on the equipment and integrating the control of the unit with the opening and closing of the passenger doors. The unit is designed to handle loading of 800 lb with virtually no deflection. It has undergone accelerated life testing in the Automation Laboratory at Rutgers University in order to test the motor and drive system as well as the consistent deployment and retraction of the bridge plate. Accelerated testing equivalent to two months of regular use on a train was done. During this testing there were no mechanical malfunctions of the unit or of the electronic control system. The testing demonstrated that this unit could perform effectively in actual use.

INVESTIGATION

This project was executed in two stages. In Stage 1, the laboratory prototype was modified so that it would fit aboard the test vehicle, an Arrow III commuter railcar. By installing and testing the prototype on a railcar, the project investigators could observe interferences and clearances, as well as design and test the electrical protocols for coordinating the control of the functions of the apparatus slide with the operations of the railcar door. Lessons learned in this stage were to be incorporated into the design of the final apparatus.

In Stage 2, the final unit was constructed and tested. This unit took advantage of our observations made in Stage 1 and the comments and suggestions of our advisory panel, and represents a significant improvement over the original laboratory prototype.

In the progression from Stage 1 to Stage 2, the project investigators were assisted by an expert advisory panel from New Jersey Transit. They provided the investigators access to the transit agency's equipment when its use was required for demonstration and testing, they followed our work, and they made helpful suggestions that were taken into consideration as we moved from prototype to final design. The members of our advisory panel were:

Dak K. Murthy P.E., CQE
Director of Quality Assurance
NJ Transit Rail Operations

Carlos Barrera
Reliability/Warranty Compliance Officer
NJ Transit Rail Operations

Mark Ives
Manager of Technical Service
NJ Transit Rail Operations

The following section of this report describes the work accomplished in each project task.

STAGE 1

Task 1: Fit Current Prototype to Carriage, Modify as Required and Integrate With Controls

A laboratory prototype version had been developed with funding through Rutgers University Voorhees Transportation Center, under a grant from the FTA. The laboratory prototype is shown on a laboratory test stand in Figure 6.

The laboratory model was constructed primarily from components that could be purchased off the shelf and assembled in an erector set fashion with minimal machining. The purpose of the laboratory model and its adaptation to fit on a railcar was to demonstrate proof of concept with the understanding that it could not serve as a final production unit. The final production unit would be designed in Task 3 and built in Stage 2 of this project.

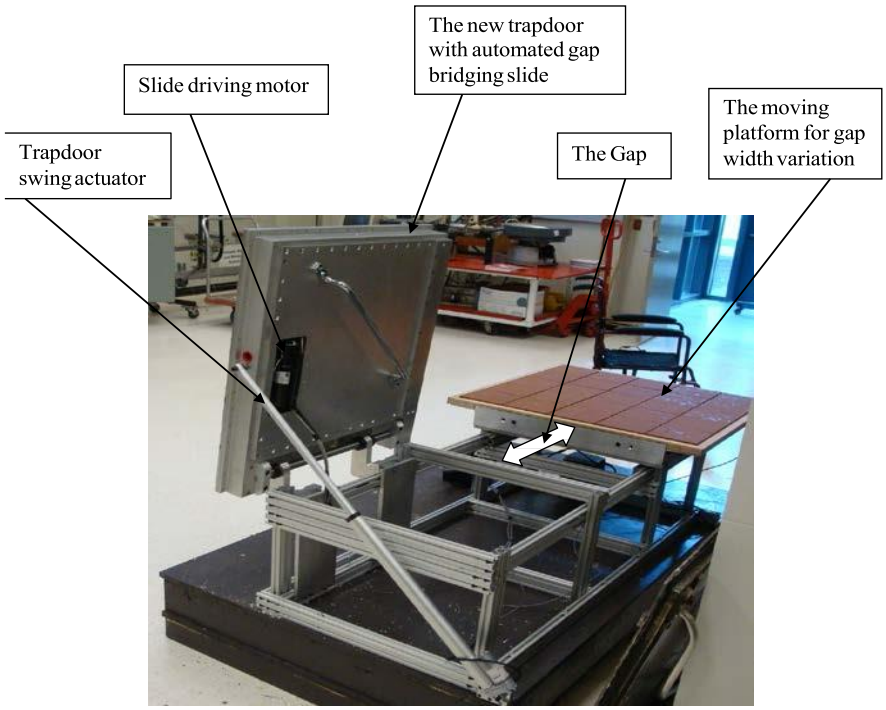

FIGURE 6 Laboratory version of trap door on a test rig.

The design of the laboratory prototype apparatus includes a *top plate* over which passengers traverse just as they would when using the standard trap door that is currently on most commuter trains in the Northeast United States. The innovation is a moving slide beneath the trap door top plate. Figure 7 shows the main subassemblies of the moving slide.

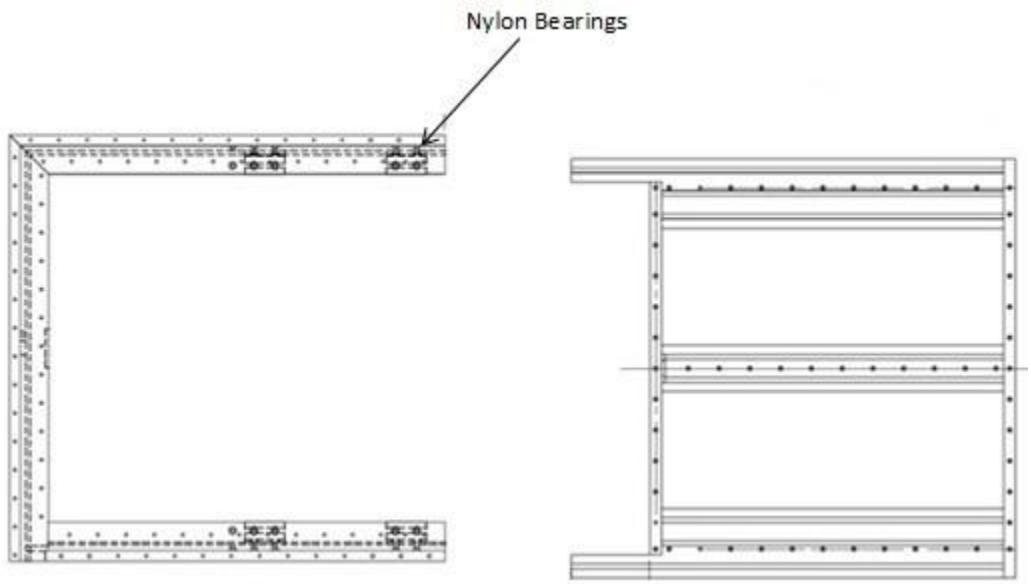

Bearing Profile Assembly **Slide Assembly**

FIGURE 7 Main subassemblies of bridge plate assembly.

The *slide assembly* is a movable bridge that is propelled outward by a DC motor that drives a power screw. It is housed within the *bearing profile assembly*, which is a fixed component attached to the underside of the top plate. The slide assembly moves across nylon bearing pads that provide a minimal friction surface. It rests on those pads when passenger traffic across the slide assembly places a load on the bridge plate.

The laboratory prototype was used as the basic design concept. An objective of the project was to extend the prototype design to a near production unit and to take advantage of lessons learned in adapting the prototype to a railcar. Unlike the prototype, the final unit was to be fully machined from metal work pieces such that it would be stronger and lighter than the prototype.

There were several modifications necessary to adopt the laboratory prototype to the railcar equipment. These included, among others, a redesign of the top plate such that it would fit the existing railcar stairwell, and changes to the mounting mechanism such that it could be attached to the car using the conventional torsion bar. These modifications were done in the fall of 2013. Machining of major parts took place at Rutgers University in the Physics Machine Shop, the only campus facility equipped to machine large components such as the top plate. Smaller component machining and alterations were done in the machine shop of the Industrial & Systems Engineering Department, where this contract is being managed.

The Arrow III railcar was identified by New Jersey Transit as our testbed. Our laboratory unit was then modified to fit the Arrow III stairwell. Figure 8 (top) shows the modified laboratory apparatus fitted to the Arrow III in both the upright position and the deployed position. The bridge is extended about 12 inches in Figure 8 (bottom), which is the designed maximum extension.

Innovative trap door in upright position

Innovative trap door in deployed position

FIGURE 8 Modified laboratory trap door in testing aboard Arrow III.

The modified laboratory prototype was successfully demonstrated on a railcar for fit and for deployment and retraction of the bridge plate device. Subsequently, the electrical controller of the apparatus was redesigned such that it integrated the operation of the bridge plate with the opening and closing of the railcar doors. The laboratory prototype controller was designed and built using conventional relay circuits as opposed to microprocessor-based controls. It was our intension to replace it with modern electronic controls in the design of the final unit.

From Task 1 we were able to observe the clearances required for the device when installed. We also observed that the width of the bridge plate could be extended about another 4 inches to give better coverage across the entrance for wheelchairs, and it could be extended backward to give more room for the electronics of the control system. These observations were taken into consideration when designing the lighter weight unit in Task 3.

Task 2: Preliminary Operational Testing

This task involved testing the actuator and moving components of the apparatus for reliable functioning. Accelerated life testing was performed on the prototype after it was modified for installation on a railcar. This testing took place in the Automation Laboratory at Rutgers University and was done in the interest of observing the reliability of the sensors, actuators, and drive systems. The unit was allowed to run continuously for increments of time over several days. The accelerated life test was equivalent to over a month of normal operation on a typical commuter train schedule. There were no system or component failures observed during this testing.

In addition, during this testing, a programmable logic controller (PLC) was used to control the apparatus in executing these accelerated life testing trials. Unlike the conventional relay circuit controller, the PLC is able to acquire data from sensors. During these trials we installed a magnet on the motor shaft and a magnetic sensor to measure the number of turns of the shaft as the slide is extended to the platform. The mathematical relationship between a complete rotation of the motor shaft and the forward movement of the slide in inches is known. Thus, we demonstrated the ability to measure the length of the extension of the slide until it reaches the platform, which is the size of the gap width. This feature can be used in conjunction with the communication network on a train to log this measurement in the same fashion that other performance data are currently captured over modern train networks.

Task 3: Design Revision and Lightweight Structural Design Modifications

In this task, the investigators used what was learned in Tasks 1 and 2 to revise the design. It was our intention to produce a design that would be close to one that could be produced commercially by a railcar builder, be lighter than the first prototype used for proof of concept, and be closer to the weight of the existing trap door.

The new design was based on a *sandwich structure* concept and is shown in Figure 9. It consists of top and bottom platens, and side beams that house the bearing pads and encase the moving slide in a box-like casing. A key improvement is the use of support channels, similar to an I-beam structure. For practical reasons, the construction of the new design is consistent with being able to be manufactured from metal work pieces by conventional machining processes.

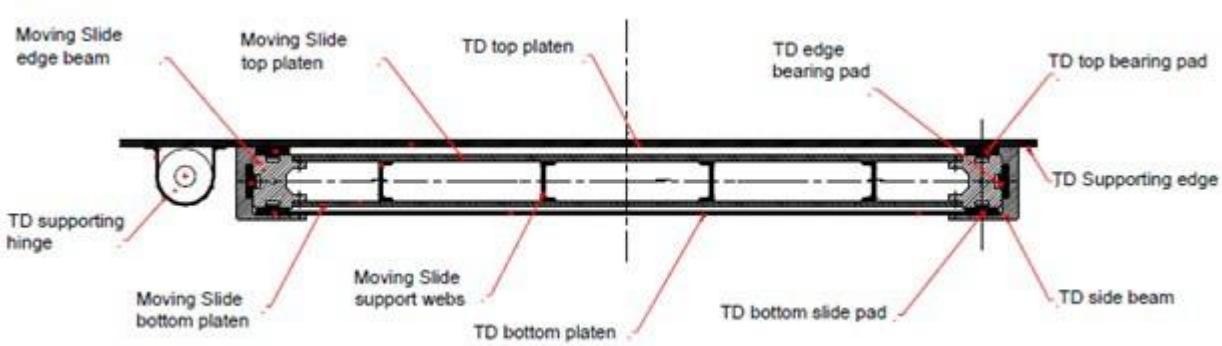

FIGURE 9 Cross section view of the proposed trapdoor of sandwich structure design concept.

The depth of the moving slide has been increased to 2 inches (compared with 1.5 inches for the laboratory prototype). Using an I-beam structure, we substantially increased the rectangular moment of inertia. In addition, the thickness of the top plate was reduced. The combination resulted in a trapdoor assembly that fulfills all operational requirements at a reduced weight.

Using computer simulation, key mechanical performance measures were studied using the finite element analysis facility of the SolidWorks design software. A comparison of mechanical design features of the laboratory prototype design and the design of Figure 9 is given in Table 1. These are based on an assumed loading of four 200 lb passengers on the bridge plate while it is extended at 12 inches. All stresses are well within a reasonable factor of safety. The bearing pads can withstand a stress of 8,000 psi before deformation and the components of the bridge plate, made of 6061 T6 aluminum alloy, can withstand a stress of 44,000 psi before deformation. Importantly, the deflection of the bridge plate under loading for the new design is minimal.

TABLE 1
RELATIVE IMPROVEMENT OF NEW DESIGN OVER PROTOTYPE

Mechanical Characteristics	Prototype	New Design
Maximum stress on bearing pads	3,257 psi	2,090 psi
Maximum stress on movable bridge plate	8,567 psi	4,760 psi
Maximum deflection of bridge plate	0.051 in.	0.028 in.

Source: SolidWorks.

Task 4: Engineering Design Review

This task requires that a design review be held with the project's expert advisory panel in order to include their input and observations for the Stage 1 report. A review meeting was held on July 14, 2014, at the facilities of New Jersey Transit in Kearny, New Jersey. The panel was given the Interim Report to read in the prior week.

The project investigators reviewed the activities and accomplishments of Stage 1 and the major improvements represented by the proposed new design. Specific suggestions were made by the advisory panel and are summarized below. The way in which these suggestions and comments were incorporated into the final design will be discussed in a later section of this report.

- Operational Safety. It was pointed out that operational safety is critical to any new design as it should provide the intended service and not be any less safe than current practice. For example, regarding this device, it is important that train personal be aware that the bridge is fully retracted before the train attempts to leave the station. Otherwise, there can be damage done to the train platform and resulting delays can cascade into schedule problems.
- Local Control. It is necessary for the conductor to be able to have local control of the device and to override the operation of the device and to manually recover from failure of the device.
- The Timeliness of Door Opening. It is a fact of life that commuters want to move through the door to the platform as quickly as possible during rush hours. They do not want to be unnecessarily delayed by a bridge deployment. Somehow the time of deployment has to be considered.

- Mobility-Impaired Passengers. One of the objectives of the device is to assist mobility-impaired passengers in wheelchairs. The strategy for complying with ADA requirements in the industry has been evolving. Newer designs of railcars, for example the Bombardier multi-level car, incorporates fixed level doors and provides more room for wheelchairs to enter and park within the car next to these doors. Manual ramps are still used with these fixed level doors, but these doors are not of the trap door type. Trap doors do exist on these trains as vestibule doors, but they do not have the wide turning room of the fixed level doors
- Environmental Factors. Because the bridge is projected outward to the platform, it is reasonable to assume that it will collect snow on days of heavy snow fall. As the bridge is retracted into the car, snow might collect on the door tracks, thus impeding easy closing of the door.

STAGE 2

Task 5 And 7: Fabricate and Build Redesigned Unit/Engineering Changes

The Task 5 activity was to fabricate and build the unit that was designed in Task 3 of Stage 1. However, it was anticipated in the original project proposal that, at any time, it may be necessary to make design changes. Usually this occurs when the unit is fabricated and tested and it is found to be wanting in some unanticipated way. Therefore, Task 7, Engineering Changes, was specified as part of Stage 2 of the project to accommodate these possibilities. In our case, engineering changes were made as part of Task 5.

After Stage 1 was completed, it became evident to the project investigators that an important consideration had been overlooked in the new design that had not been noted previously. A critical problem involved the construction of the edges of the moving slide beam, which is shown in Figure 10a. Each moving slide edge beam of the proposed new design has three channels that ride on bearing pads. The bearing pads are made of nylon and are the primary support of the bridge as it is extended. As can be seen in Figure 10a, when the bridge is extended outside of the supporting shell, these channels are exposed to the elements and will collect dirt and other foreign materials while in the extended position. As the bridge is withdrawn back into the shell, these foreign materials will be brought in to the bearing pads. This will wear on the bearing pads and eventually jam the unit, rendering it incapable of functioning. It was clear that this is a problem that had to be addressed.

The solution was to invert the relationship between the bearing pads and the slide beams and to enclose the sliding beam bearing surface so that it is not exposed. This new arrangement is shown in Figure 10b. Note the absence of any exposed groves for collecting dirt and debris. There are other improvements that were made in the new design, although the enclosure of the moving slide contact area was the primary issue that we felt that we had to address.

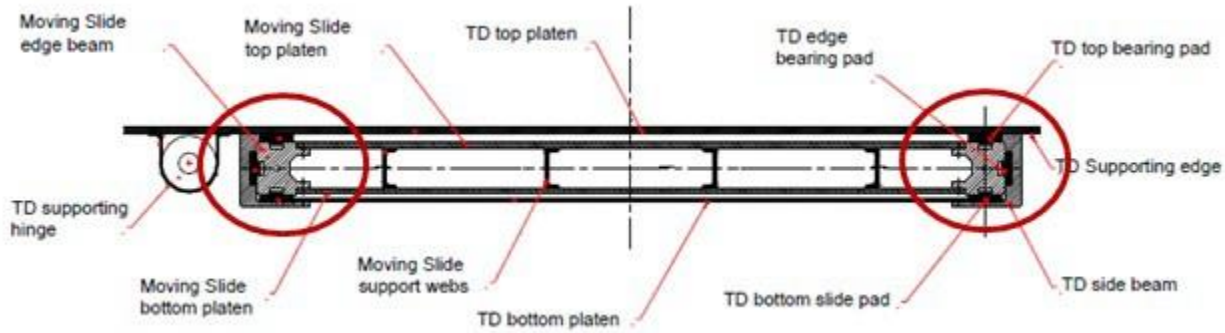

FIGURE 10(a) Final design as originally conceived in Task 3 showing area of concern circled in red.

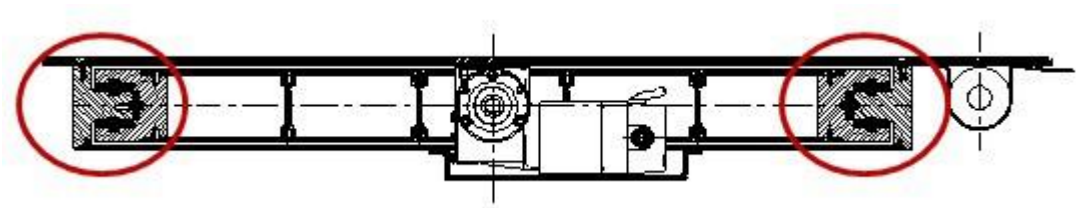

FIGURE 10(b) Improved design with inverted bearing pad interface to reduce exposure.

FIGURE 10 Comparison of original Task 3 design and final design with reduced environmental exposure of critical elements

The width of the slide assembly in Figure 10b is increased to 27 inches from 24 inches of the modified laboratory prototype, giving passengers a wider surface and allowing wheelchairs to comfortably traverse the bridge. When the new moving slide beam arrangement was studied for mechanical performance using SolidWorks simulation, it was found that the mechanical properties were improved over those of the prior design. The stresses on the bearing pads and bridge plate were significantly lower and the maximum deflection of the bridge plate under 800 lb loading when extended 12 inches is 0.013 inches, which is only half of the deflection of the design of Figure 10a. The design of Figure 10b was manufactured in the Physics Machine Shop of Rutgers University and completed on July 1, 2015.

The Physics Machine Shop fabricated and assembled a single unit of the mechanical structure for $9,700. When one includes purchased components (motor, controller, and sensors), $10,500–$11,000 is a reasonable estimated range for manufacturing one prototype unit.

Manufacturing in volume reduces unit cost significantly because of the reduced setup time and other fixed costs. A conservative estimate was made for the manufacture and assembly of the new unit in batch sizes of 100. We conservatively estimate that cost at about $4,500–$5,000. The conventional trap door replacement unit for the Arrow III costs about $3,000 when made in production volume. Therefore, we estimate that the marginal cost of adding the conveniences incorporated in the new design would be in the range of $1,500 to $2,000 per unit.

Task 6: Install Unit on Carriage and Perform Functional Life-Cycle Tests

The fabricated and assembled unit of Figure 10b needed to have a control system installed to execute the functions of the unit and to coordinate it with the opening and closing of the doors on the Arrow III. The proposed sequence of the controller was to first extend the bridge on command of the conductor and then open the carriage door for the safe passage of passengers. After passengers have cleared the entrance, the conductor would command the closing of the door. The door would first close and, following that, the bridge plate would be retracted. This sequence was previously shown in Figures 3–5.

A programmable controller replaced the hard wired relay circuit used with the prototype. Appropriate

sensors were installed. A photo of the final unit being prepared for installation on the Arrow III is shown in Figure 11 and will be described in overview in what follows.

Figure 11a shows the main mechanical assemblies when viewed from the front with the bottom cover removed. In this photo the open unit is viewed from the bottom and is resting on the top plate. The bearing profile assembly, referred to previously, is the outer structure that is fixed to the top plate. It provides the cradle in which the slide a ssembly resides. The slide assembly is the movable bridge that is driven by the power screw that is shown in the center. The power screw moves the slide assembly forward 1 inch every eight turns. An important safety component at the front of the slide assembly is a pressure-sensitive tape switch. When it comes in contact with an object, a signal is sent to the controller and forward movement of the slide can be stopped. Coverage of the face of the moving slide assembly with the pressure switch will prevent accidents in the event that a passenger wedges a body part between the device and the platform. In the laboratory prototype, a proximity sensor was used to indicate that the platform had been reached. This was proven to be effective in stopping at the platform, but the coverage was not broad enough to indicate a foreign object at any point along the front width of the moving device. Any one of a number of responses can be programmed for the tape switch. It could simply stop all forward movement or, in conjunction with a proximity sensor, it could be used to distinguish whether the object encountered is the front end of the platform or a foreign object, such as a person. For the latter, some recovery action could be programmed, such as retracting the slide assembly while keeping the carriage door closed. The reader should also note the lateral I-beams within the body of the slide assembly, which give the unit the rigidity and strength to easily carry 800 lb of load with virtually no deflection.

Figure 11b shows some of the internal workings of the electronic controls. Items are numbered for easy identification. Item 1 is a hollow shaft DC motor with rotational speed of 500 rpm. It is driven directly from the carriage voltage source at 36 volts DC. The motor drives a power screw, labeled 3. The laboratory prototype unit used a DC motor with a rotational speed of 250 rpm. Therefore, the extension and retraction speed of the new unit is double that of the laboratory prototype unit. The power screw is threaded through a gear box (2). The gearbox has access nuts on the bottom side and the top side that allow a conductor to easily manually retract the slide in the event of power failure by using a wrench. A quickly removable cap is placed over these access nuts. This feature was not present on the laboratory prototype. Non-contact magnetic sensors (4) are used to set limits to the maximum forward position and the retracted (home) positions of the slide. The original laboratory prototype used contact limit switches, which are less desirable due to wear. The controller is a microprocessor-based PLC (6) that is programmable for any control sequence desired. If the unit is to be integrated into the design of a newer generation of railcar, the PLC can easily be replaced by wiring the sensors and actuators to the on-board train network control system. This is beyond the scope of this project. Since the PLC is powered by standard 24 volt DC supply, a step down DC transformer (5) is used to convert from the carriage voltage of 36 volts DC. Relay contacts (7) are controlled by the PLC and are used to turn the motor on and off and to provide external signals to the carriage door operating system to open and close the door on command. A magnet is embedded in a cylindrical fixture (8) on the secondary motor shaft. Using a magnetic sensor, the number of rotations of the motor shaft, as it moves the slide assembly to the platform, can be counted. This allows the size of the gap to be measured in inches using the ratio of the forward travel of the slide assembly in inches for each complete rotation of the shaft. Our testing of the gap measurement accuracy of this system indicates it can provide an accurate reading of gap width to at least a tenth of an inch.

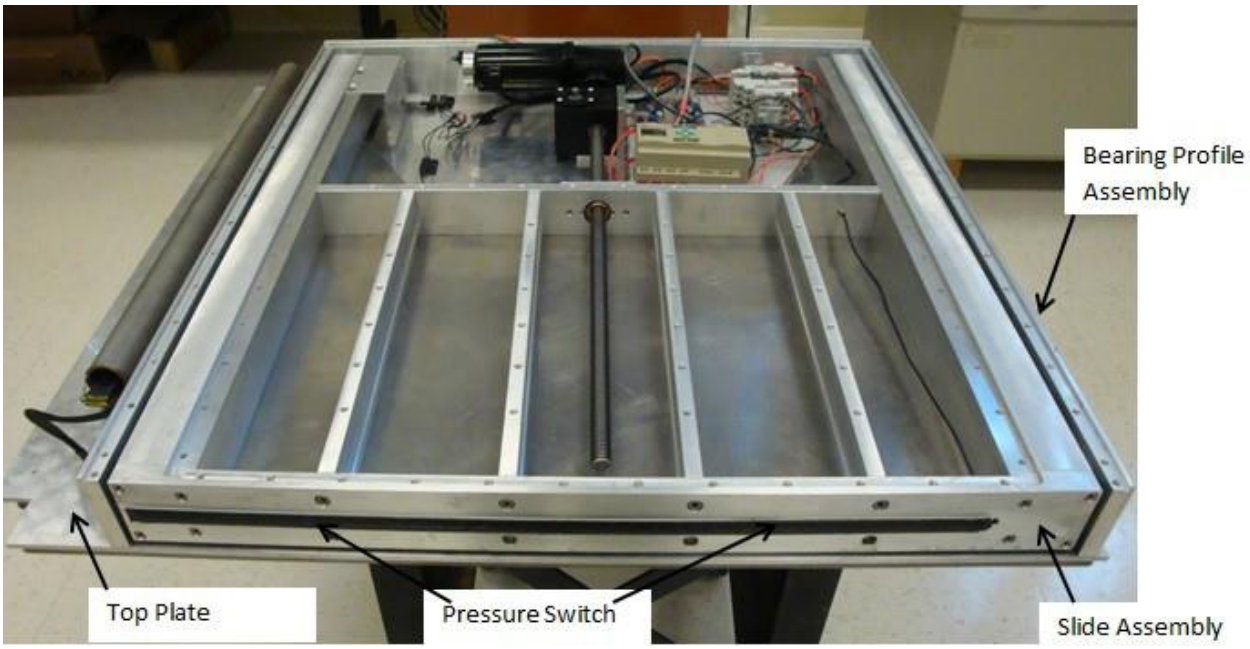

FIGURE 11(a) Overview of mechanical structure of innovative trap door.

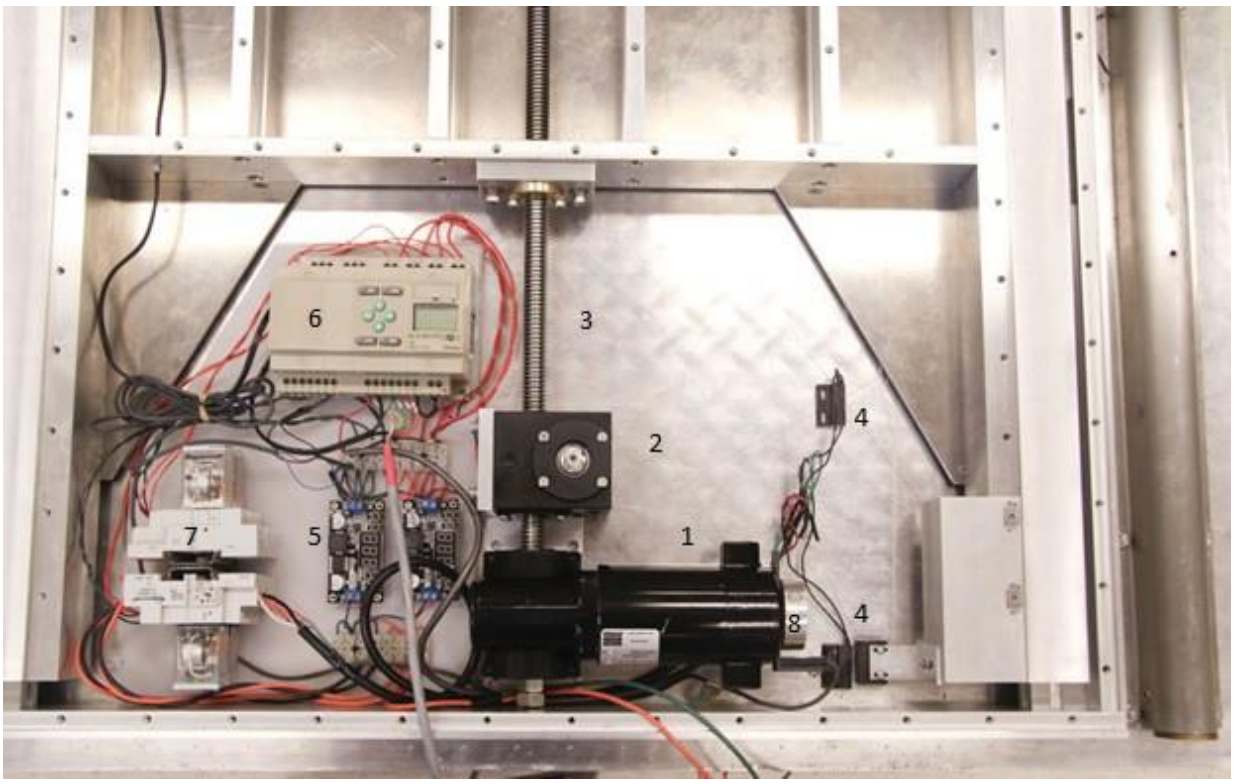

FIGURE 11(b) Actuators and electronic components.

FIGURE 11 View of the internal structure of the innovative trap door.

These improvements in the current unit allow us to address some of the concerns raised by the Advisory Panel at the end of Stage 1. We shall briefly describe those points again.

- Operational Safety. It was pointed out that operational safety is critical to any new design as it should provide the intended service and not be any less safe than current practice. For example, regarding this device, it is important that train personal would be aware that the bridge is fully retracted before the train attempts to leave the station. Otherwise there can be damage done to the train platform and resulting delays can cascade into schedule problems.
  Additional safety is now provided by the use of a pressure tape across the front of the bridge to reduce the likelihood of any passenger-related accidents. The previous unit used contact sensors to indicate that the bridge was completely retracted. In the new unit, contact sensors were replaced with non-contact sensors, greatly improving the reliability of the system in reporting that the home position is reached and the device is fully retracted. These are all improvements from the initial prototype.
- Local Control. It is necessary for the conductor to be able to have local control of the device and to override the operation of the device and to manually recover from failure of the device.
  The addition of a manual override in the form of a gearbox allows the conductor to recover from a complete failure of the system. A wrench can be inserted from both the top and the bottom of the unit and the power screw can be turned by hand to retract the bridge. We have also equipped the control box of the unit with a software E-Stop (emergency stop) button that will allow the conductor to disable all actuator movement at any time. If the E-Stop is used, recovery is then possible using either the manual retraction via the gearbox or electronically by using one of the other control buttons to automatically retract the slide to the fully retracted home position.
- The Timeliness of Door Opening. It is a fact of life that commuters want to move through the door to the platform as quickly as possible during rush hours. They do not want to be unnecessarily delayed by a bridge deployment. Somehow the time of deployment has to be considered.
  In the new unit design we incorporate a motor with twice the speed of the old design. With the new motor the slide extends at slightly more than 1 inch per second.
- Mobility-Impaired Passengers. One of the objectives of the device is to assist mobility-impaired passengers in wheelchairs. The strategy for complying with ADA requirements in the industry has been evolving. Newer designs of railcars, for example the Bombardier multi-level car, incorporates fixed level doors and provides more room for wheelchairs to enter and park within the car next to these doors. Manual ramps are still used with these fixed level doors, but these doors are not of the trap door type. Trap doors do exist on these trains as vestibule doors, but they do not have the wide turning room of the fixed level doors.
  This project proposal stated its intention to focus on an apparatus for a trap door. It can assist mobility-impaired passengers when using a trap door, which is also on the newer train designs, including the Bombardier multi-level. The basic concepts could also be adopted by railcar builders for fixed level doors, although that would require changes to the structural characteristics of the railcar. By focusing on the trap door, we have eliminated any considerations of carriage structural changes. It would be left to a railcar builder to adapt the concepts to a fixed level door.
- Environmental Factors. Since the bridge is projected outward to the platform, it is reasonable to assume that it will collect snow on days of heavy snow fall. As the bridge is retracted into the car snow might collect on the door tracks, thus impeding easy closing of the door.
  In Task 5, we addressed a critical environmental concern by redesigning the interface between the sliding members of the slide assembly and bearing pads so that environmental contamination is minimized. Also, our control sequence requires that the carriage door is closed before the slide is

retracted. Because the door is closed, any snow that accumulates on the slide will not be carried back into the cab vestibule or on to the door tracks.

The final unit was tested aboard an Arrow III railcar in the NJ Transit Maintenance Yard on August 3, 2015. The unit met all specification requirements. The unit was then transferred to the Automation Laboratory of the Industrial & Systems Engineering Department at Rutgers University for further testing. Accelerated life testing was performed on the unit. The unit was allowed to run continuously for increments of time over several days. The accelerated life test was equivalent to more than 2 months of normal operation on a commuter train. There were no mechanical system failures or electronic system failures observed during this testing.

Task 7: Engineering Changes and Retesting

The results achieved in Task 6 did not indicate that any further design changes were necessary. As previously discussed, Task 7 was invoked as part of Task 5 and the results of Task 6 confirmed the improvement in design and functionality.

Task 8: Technology Transfer

Rutgers University applied for a patent on this innovative device. We received a notice of publication from the U.S. Patent and Trademark Office that the patent application was published on December 4, 2014. This is the primary way in which universities transfer technology. The Office of Technology Commercialization at Rutgers University is involved with the project team in seeking commercial interest in the innovation.

PLANS FOR IMPLEMENTATION

Rutgers University has applied for a patent on this innovation and the patent application is published and available in the public domain. In the opinion of the project investigators, the next step in any plan for implementation is deployment of the current unit on a train in order to observe its actual use in place, and particularly to observe the reaction and behavior of the traveling public to it. The unit was purposefully designed such that it could be installed on a single door of a commuter railcar and operated under the supervision of a conductor. A field trial phase in which the traveling public is involved is an important next step in product transfer. Since the unit was tested under laboratory conditions and demonstrated in a maintenance facility, the actual performance under varying weather conditions is not known, another reason why field trials are called for at this time. We recommend that such trials be funded by the appropriate federal agency. In our opinion, it is important that a railcar equipment builder be involved with the transit agency so that lessons learned from field trials can be integrated into a commercial version of the product. Engineering drawings and other technical information is available for transfer to any vendor who enters an agreement to license the technology from Rutgers University.

INVESTIGATOR PROFILES

Thomas O. Boucher is Professor in the Department of Industrial and Systems Engineering, Rutgers University. He has a BS in Electrical Engineering (University of Rhode Island), and an MS and PhD in Industrial Engineering (Columbia University). His research is in the areas of manufacturing automation, computer information systems, production control, and engineering economics. His research has been funded by the National Science Foundation, the Defense Logistics Agency, Robert Wood Johnson Foundation, and industry. He is the author or coauthor of three books, including *Computer Automation in Manufacturing* (Chapman & Hall 1996) and *Design of Industrial*

Information Systems (Elsevier 2007). His research articles appear in numerous journals, including *IEEE Transactions on Robotics and Automation*, *Robotics and Computer Integrated Manufacturing*, and *IIE Transactions on Design and Manufacturing*.

Basily B. Basily is Research Professor in the Department of Civil and Environmental Engineering, Rutgers University. He is also a Professor in the Mechanical Design and Production Department, Cairo University. His research interests are in the areas of experimental stress analysis, elasticity and plasticity, metal forming, and machine design. He is the author of five international patents, and twenty-four publications in the above areas of interest. His research has been funded by the Department of Transportation, National Science Foundation, Department of Defense, Honda Corporation, and other industrial companies. In 2011, he was a recipient of the Thomas Alva Edison Patent Award from the New Jersey Commission on Science and Technology for his design of a novel folding process and associated machine that manufactures high strength shapes.

REFERENCES

1. Office of the Federal Register, Code of Federal Regulations: Title 49 Transportation Parts 1 to 99, Revised as of Oct. 2013, p. 537.
2. Federal Railroad Administration (FRA), *Approach to Managing Gap Safety*, Office of Safety, FRA, Washington, D.C., Dec. 2007.
3. Jewell, M., *Federal Panel to Study Passenger Risks from Rail Platform Gaps*, Associated Press, Feb. 12, 2007 [Online]. Available: www.examiner.com/articlaPDF.cfm?articleID=561506.
4. Maloney, J., *National Group Offers Solution to Gap Problem*, Newsday.com, Feb. 14, 2007.
5. Maloney, J., *Federal Effort to Bridge Gap*, Newsday.com, Oct. 4, 2006.
6. American with Disabilities Act, *ADA Accessibility Guidelines* (ADAAG), Section 10, Transportation Facilities, U.S. Department of Labor, Washington, D.C., 2001.

Appendix

A meeting of the Expert Advisory Panel was held on September 4, 2015, to review the report with the Investigators and to allow the Panel to give their comments on the work accomplished and their recommendations for further possible improvements of the product. Participants included all advisory panel members and the project team members, Thomas O. Boucher and Basily B. Basily of Rutgers University. The following is a summary of the major points and comments of the panel. Italics indicate follow-up comments of Professors Boucher and Basily.

- Need for more reliability testing. Before the proposed device could be deployed on a mass scale, there is significant reliability testing required. It will be necessary to test the device in different situations, on different lengths of platforms, and so on. Significant field testing is always done in the industry when a new device is proposed for use.
  We agree. The project was executed in a research setting. Reliability testing under different actual operating conditions is consistent with our recommendations for the future as described in the section of the report entitled Plans for Implementation.
- Delay caused by the extension of the bridge. The extension speed has been cited as slightly more than 1 inch per second. This delay in opening the train doors for passenger loading/unloading may be considered a tradeoff for safety. However, anything that can be done to minimize the time of bridge deployment will be helpful.
  In future embodiments of the apparatus it may be possible to use a higher power motor with larger lead power screw so that fewer turns are required to extend the bridge to a given length. There will always be some small delay while extending the bridge, which is the price of added passenger safety and convenience.
- The effects of vibration during actual use. Vibration is quite common on trains. Products that function under laboratory conditions or on a train that is not moving will not necessarily function under vibration conditions. This product has to be tested under vibration conditions.
  We agree, although the compound use of Acme power screw and plain bearing in our design for the moving of the slide makes it relatively insensitive to vibrations and impact. This is another argument for actual operational testing aboard a train as proposed on page 16 or the report under Plans for Implementation.
- Protecting electronic controls. Electronic controls, such as programmable controllers, can be damaged by water. Rain and other environmental conditions can bring moisture into the area of the controls. Additional sealing may be required to prevent this from happening.

  We agree. In the current embodiment of our prototype, the controller is located in a fixed position to the rear of the unit well back from the slide assembly and beneath the top plate. Still, being in the same chamber as the slide assembly can put the unit at risk for water damage. If the unit were adapted to a modern vehicle, the stand-alone controller would be replaced by integrating the controls on a train network that complies with the IEEE 1473-L (in trains control) standard, or similar. This would eliminate the need for a controller to be housed within the unit. A cable could carry the signals to the network input points installed in a protected place within the rail car. If the device was used as a stand-alone system on a vehicle not having a network, then some attention should be given to relocating the controller off the unit. In any forward looking plan for application to new equipment, a train network will certainly be used, just as it is for control of pneumatic breaking and other critical functions on a train.
- Weight of the unit and ease of lifting by train personnel. Compare the unit to the current conventional trap door without moving slide.
  The current design is about 15 lb lighter than the comparable laboratory model design. The current unit

was designed with the objective of bringing the weight of the innovative trap door to around 115 lb, which is the weight of the conventional trap door currently in use on the Arrow III. When producing the unit some excess material was not removed in order to eliminate some machining time in the machine shop and to move the unit into testing and demonstration to stay on the project schedule. The unit as built was 10 to 15 lb heavier than the unit as designed. Since the torsion bar mounting mechanism has a counter weight that can be set well above 150 lb, the demonstration and testing could be done with the extra weight. However, all the improved mechanical properties of the unit as documented in this report were evaluated by simulation at the design specification and weight, which the computer-aided design software estimates is around 115 lb. So, the design weight was reduced considerably from the comparable laboratory design, and is of the order of the weight of the conventional trap door. Additional machining can reduce the built prototype weight to design weight.

- Recovery from mechanical failures. Mechanical equipment is subject to failure from jamming and it is important to be able to recover from the problem. For example, sometimes mechanical jamming is experienced with train doors. If this occurs it is important for the conductor to be able to see the source of the jam and recover from it. To diagnose such a problem in the current embodiment of the trap door apparatus design, the conductor would have to completely remove the bottom cover. In any future embodiment of the design it would be a good idea to integrate an inspection port for easy access to inspect the causes of a jam rather than to have to remove the bottom cover.
  We agree with the recommendation.
- Elimination of the current practice of using a manual bridge plate for covering the gap will save time. If this apparatus is implemented in actual application it will eliminate the need for the conductor to fetch a manual bridge plate for passengers in wheelchairs. This would be a savings in time spent by the train at the station and can reduce potential schedule delays. This is one of the advantages of the device not specifically mentioned in the report.
  We acknowledge this advantage of the apparatus.
- Overall it was a valuable project and we learned a lot from the experience. The report is well written.