# APPENDIX G

# DESIGN EXAMPLES OF END ZONE REINFORCEMENT

## Table of Contents



---

## G.1 EXAMPLE I

*Design the end zone reinforcement for a 45 in. deep Virginia bulb-T with 38-0.6 in. diameter strands in the bottom flange, and 14-0.6 in. diameter strands in the top portion of the web. The strands are 270 ksi low relaxation strands, tensioned to a stress of 0.75x270 ksi, or a force of 44 kips each. No debonded strands were used. This example is similar to the Virginia specimens used in this study, except that it does not have the extra 4 in. of top flange thickening needed for testing.*

### G.1.1 Design according to the AASHTO LRFD Specifications

The total prestressing force = 52*44 = 2,288 kips

The bursting force = 0.04*2,288 = 91.52 kips

The required steel area = 91.52/20 = 4.58 $in^2$

(h/4) = 11.25 in.

Use 6 pairs of #6 bars at @ 2.0 in. spacing

The area of steel = 6*2*0.44 = 5.28 $in^2$ > 4.58 $in^2$

Use a 1.5 in. space from the member end to the centerline of the first pair of bars. Thus, the clear cover is larger than 1 in. The distance from the end of the member to the centerline of the last pair of bars = 1.5 + (5*2) = 11.5 in. This is close enough to h/4 = 11.25 in.

Bottom flange confinement steel is required to be #3@3" for a distance of 1.5h = 67.5 in. Use 67.5/3 = 23 #3 bars.

The reinforcement details are shown in Figure G-1.

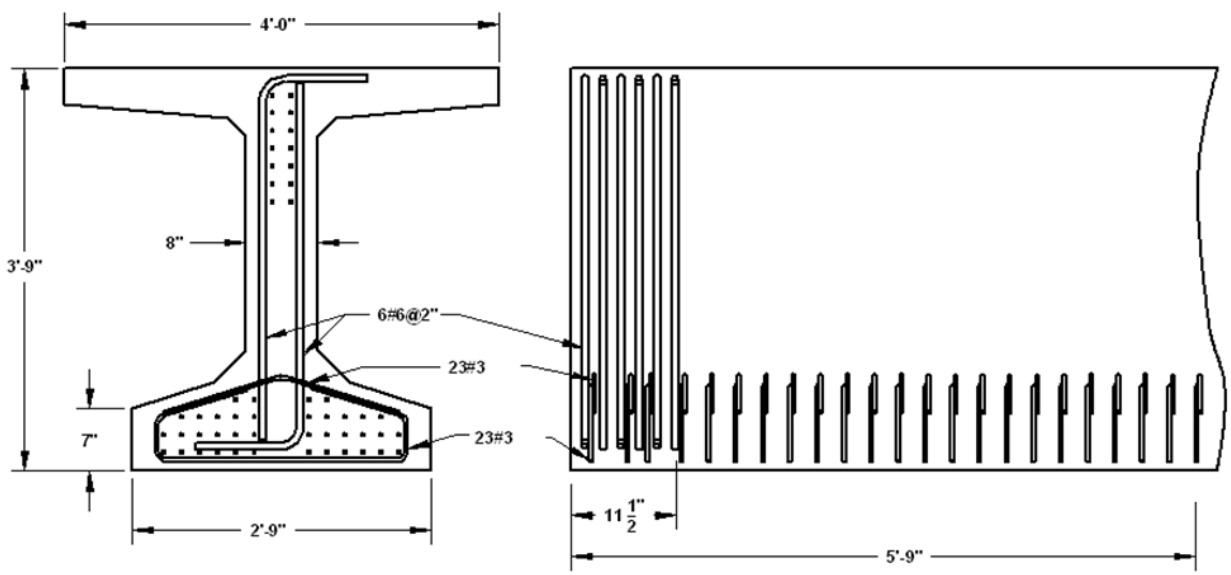


Figure G-1. Reinforcement Details according to the LRFD Specifications

### G.1.2 Design according to the Proposed Detail

(1) Fifty percent of the bursting force requires reinforcement area = 0.50*4.58 $in^2$ = 2.29 $in^2$. It is recommended to be placed within h/8 = 5.625 in. from the girder end. Use a single #8 -C shaped bar at the centerline of the web whose centerline is 1.5 in. from the member end. In addition, use a pair of #5 bars on the two web faces at the same 1.5 in. distance from the end. Add one more pair of #5 bars at 3 in. spacing.

Thus, the total distance from the member end to the centerline of the second pair of #5 bars = 1.5 + 3 = 4.5 in. < 6.625 in. The area provide = 0.79 + 4*0.31 = 2.03 $in^2$ < 2.29 $in^2$. However, as will be shown, the next set of 2#5 bars at 3 inch would contribute more than the required amount of steel within the required h/8 distance.

(2) Provide at least 4.58 $in^2$ in the end h/2 = 22.5 in. Of this amount, 2.03 $in^2$ is already provided in the first 4.5 inch. The remainder is 4.58 - 2.03 = 2.55 $in^2$, or 5 pairs of #5 bars. Separate calculations, not shown here, for shear design indicate that #5@6 in. is required for shear at the nearest critical section. If 4 additional pairs of #5 are placed at 3 in. spacing and one pair at 6 in., then to total area of steel = 0.79 + (7*0.62) = 5.13 $in^2$ > 4.58 $in^2$, in a distance = 1.5+(5*3)+(1*6) = 22.5 in. = h/2 as required.

(3) Use #5 @6 in. for a distance beyond h/2, determined by shear design.

(4) Use #3 @ 3 in. bottom flange confinement reinforcement for a distance = 60*0.6 = 36 in.

Details of the end zone reinforcement are given in Figure G-2.

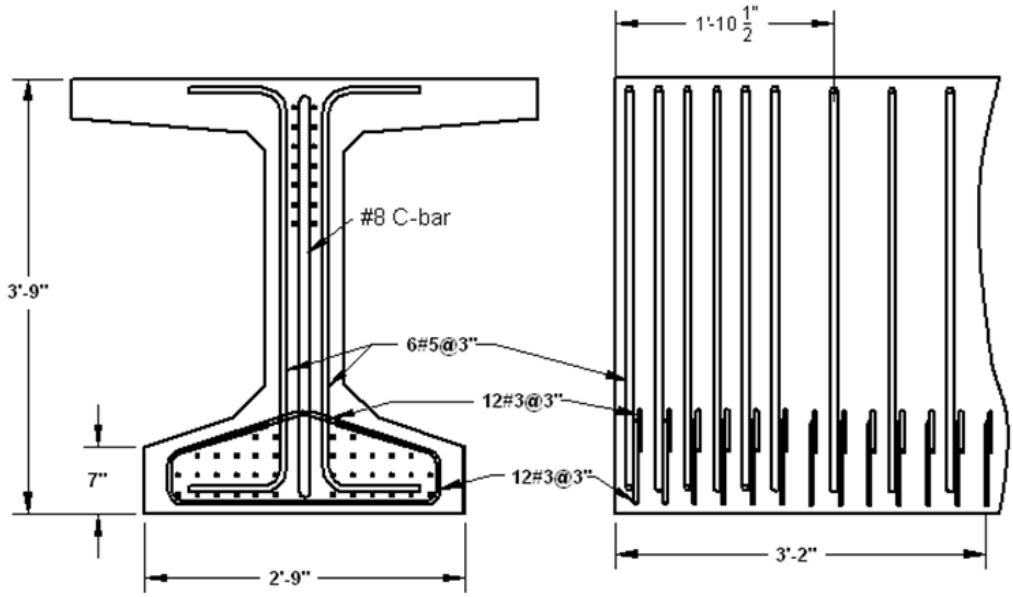


Figure G-2. Reinforcement details according to the proposed method

## G.2 EXAMPLE II

*Design the end zone reinforcement for the newly introduced Florida I-Beam (FIB). The beam is 45 in. deep. 72-0.6 in. diameter strands are placed in the bottom flange. Of these strands, 10 are debonded at 8 feet from the ends and another 8 strands are debonded at 16 feet from the ends. The strands are tensioned to 44 kips. All strands are straight.*

### G.2.1 Design according to the AASHTO LRFD Specifications

The prestressing force at the end = (72 – 10 - 8)*44 = 2,376 kips

The bursting force = 0.04*2,376 = 95.04 kips

The required steel area = 95.04k/20ksi = 4.75 $in^2$

h/4 = 11.25 in.

Use 6 pairs of #6 bars with a clear cover of 1 in. and a spacing of 2 in. Thus, steel area = 6*2*0.44 = 5.28 $in^2$ over a distance = 1.375 + (5*2) = 11.375 in.

### G.2.2 Design according to the Proposed Detail

Use a pair of 1 in. diameter coil rods at 1 in. clear cover, followed by 7 pairs of #5 bars at 3 in. spacing. The pairs of #5 provide the equivalent of 0.62/3 = 0.207 $in^2$/in.

The area of bursting steel within a length of 5.625 in. = 2*0.79 + 0.207*(5.625-1.5) = 2.43 $in^2$ > 2.375 $in^2$

The total area of bursting steel = 1.58 + (7*2*0.31) = 5.92 $in^2$ > 4.75 $in^2$

It is placed over a distance = 1.5 + (7*3) = 22.5 in. = h/2.

Confinement steel should be provided for a distance of 60 strand diameters, or 36 in., from the end. A second set of confining steel should be provided starting at 8 feet and a third set starting at 16 feet. However, for simplicity, it is recommended to uniformly use #3 at 3 in. for a distance = 16 + (36/12) = 19 feet from the ends. Details are shown in Figure G-3.

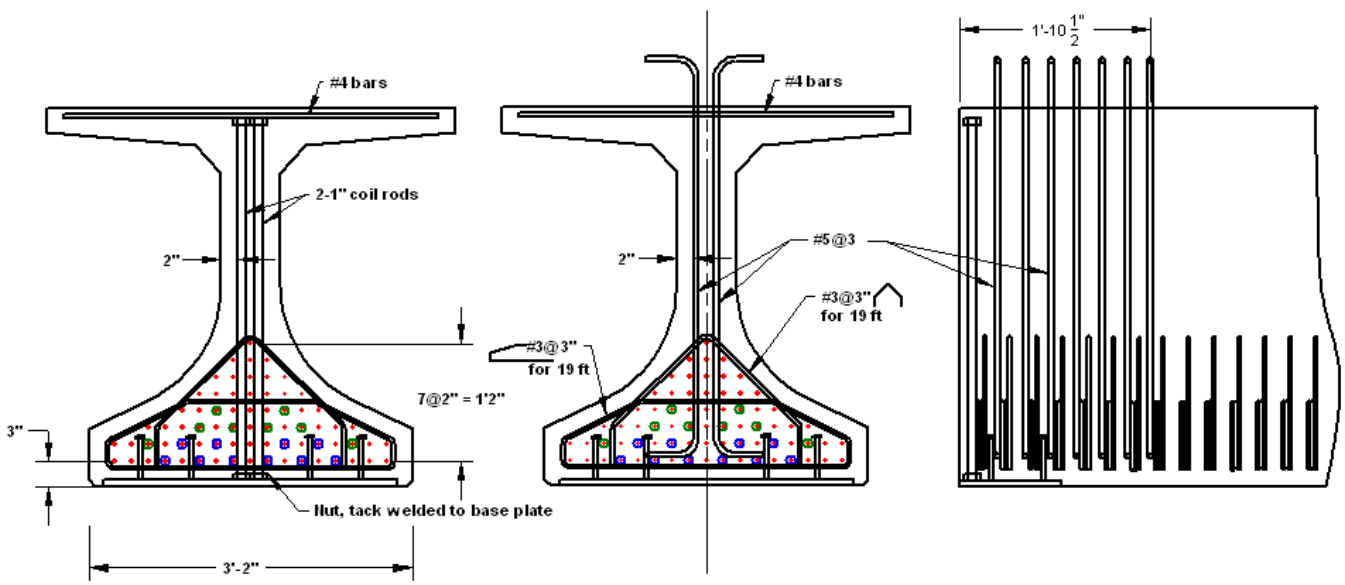


Figure D-3. Web End Reinforcement Details for Example 2