APPENDIX A: DESIGN OF MSE WALL

1. 5-ft high MSE wall with 8-ft long strips design

Wall

Wall height,	H =	6.190	ft	1/2 H=		3.095	ft	
Reinforcing fill length,	L =	8.000	ft	Length of slab =		4.500	ft	
	B =	8.458	ft	D_{60}=	6.800	mm	C_u =	90.667
Soil unit weight,	γ_{soil} =	0.125	kcf	D_{10}=	0.075	mm	log C_u =	1.957
Traffic surcharge,	q =	0.25	ksf					
Reinforcement fill, ϕ =		34 degrees	->	0.593	radians			
(LRFD 11.10.6.2)			->	$\tan\phi$ =	0.675	->	Ka =	0.283
Retained fill, ϕ =		30 degrees	->	0.524	radians			
			->	$\tan\phi_f$ =	0.577	->	Kaf =	0.333
Static load =		10 kips						

Panel

First strip location =	2.460	ft	Strip width =	1.969	in. =	0.164	ft	
Location of slab bottom =	1.670	ft	Strip thickness =	4	mm =	0.013	ft	
Vertical spacing of strips, S_v=	2.460	ft	Horizontal spacing of strip=	1.623	ft			
Panel width =	4.870	ft	Steel Reinforcement Strength f_y =				60	ksi
Panel height =	4.854	ft	density of strip per panel =	6				
Panel thickness =	0.458	ft						

Load Factor, γ (LRFD 11.5.5)

1. Typical application

1.a. Bearing Resistance

γ_{EV} = 1.35 γ_{EH} = 1.5

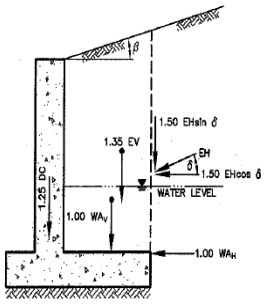

Figure C11.5.5-1 Typical Application of Load Factors for Bearing Resistance.

1.b. Sliding and Eccentricity

γ_{EV} = 1 γ_{EH} = 1.5

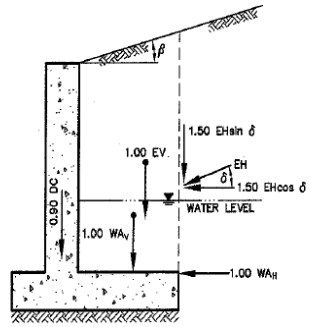

Figure C11.5.5-2 Typical Application of Load Factors for Sliding and Eccentricity.

2. Live Load Surcharge on MSE wall

2.a. Bearing and reinforcement tensile resistnace

γ_{LS} = 1.75

2.b. Sliding, eccentricity and reinforcement pullout resistance

γ_{LS} = 1.75

(LRFD Figure C11.5.5-3(b))

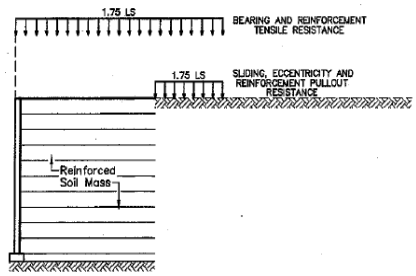

Resistance Factor, ϕ (LRFD Table 11.5.6-1)

Mechanically Stabilized Earth Walls			
Pullout resistance of tensile reinforcement,	Static loading =	0.9	
	Combined static and impact loading =		1
Tensile Resistance of strip reinforcement,	Static loading =	0.75	
	Combined static and impact loading =		1

1. External Stability

1.1 Static Mass Stability

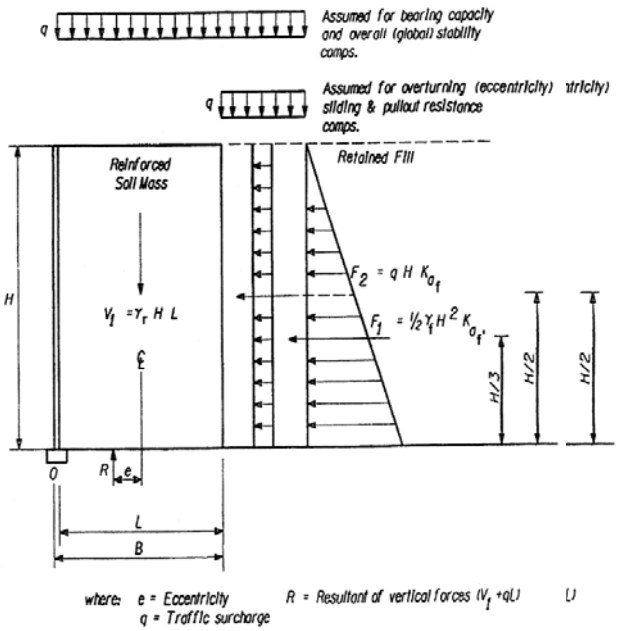

(LRFD Figure 11.10.5.2-1)

1.1.1 Vertical loads

1. Reinforced Soil

V = γ_{soil} × H × L

V1= 0.125 (kcf) × 6.19 (ft) × 8 (ft) = 6.190 kips/ft

γ_{EV} × V1= 1.35 × V1= 8.357 kips/ft

Moment arm of V1 = 4 ft

M_{v1}= 6.19 (kips/ft) × 4 (ft) = 24.760 ft-kips/ft

γ_{EV} × M_{v1}= 1.35 × M_{v1}= 33.426 ft-kips/ft

2. Traffic surcharge

V2= 0.25 (ksf) × 8 (ft) = 2.000 kips/ft

γ_{LS} × V2= 1.75 × V2= 3.500 kips/ft

Moment arm of V2 = 4 ft

M_{v2}= 2 (kips/ft) × 4 (ft) = 8.000 ft-kips/ft

γ_{LS} × M_{v2}= 1.750 × M_{v2}= 14.000 ft-kips/ft

$\sum V$ = 8.19 kips/ft $\sum M_v$ = 32.760 ft-kips/ft

$\sum \gamma V$ = 11.86 kips/ft $\sum \gamma M_v$ = 47.426 ft-kips/ft

1.1.2 Horizontal loads

1. Retained soil

F1= 1/2 × γ_{soil} × H^2 × Kaf

F1= 1/2 × 0.125 (kcf) × 38.316 (ft^2) × 0.333 = 0.798 kips/ft

γ_{EH} × F1= 1.5 × F1= 1.197 kips/ft

Moment arm of F1 = 6.19 /3 = 2.06 ft

M_{F1}= 0.798 (kips/ft) × 2.063 (ft) = 1.647 ft-kips/ft

γ_{EH} × M_{F1}= 1.5 × M_{F1}= 2.471 ft-kips/ft

2. Traffic surcharge

F2= q × H × Kaf

F2= 0.250 (ksf) × 6.190 (ft) × 0.333 = 0.516 kips/ft

γ_{LS} × F2= 1.5 × F2= 0.774 kips/ft

Moment arm of V2 = 3.095 ft

M_{F2}= 0.51583 (kips/ft) × 3.095 (ft) = 1.597 ft-kips/ft

γ_{LS} × M_{F2}= 1.5 × M_{F2}= 2.395 ft-kips/ft

$\sum F$ = 1.31 kips/ft $\sum M_F$ = 3.244 ft-kips/ft

$\sum \gamma F$ = 1.97 kips/ft $\sum \gamma M_F$ = 4.865 ft-kips/ft

1.1.3 Sliding (LRFD 11.10.5.3)

Sliding without Load Factor= $\frac{\sum V*\tan\phi}{\sum F_H}$ = $\frac{8.190 \times \tan 30}{1.314}$ = 3.598

Sliding with Load Factor = $\frac{\sum \gamma_{EV} V*\tan}{\sum \gamma_{EH} F_H}$ = $\frac{11.857 \times \tan 30}{1.971}$ = 3.473

1.1.4 Overturning (LRFD 11.10.5.3)

Overturning w/o Load Factor= $\frac{\sum Mv}{\sum M_F}$ = $\frac{32.760}{3.244}$ = 10.100

Overturning w/ Load Factor= $\frac{\sum \gamma_{EV} M_v}{\sum \gamma_{EH} M_F}$ = $\frac{47.426}{4.865}$ = 9.748

1.2 Bearing Capacity at Base

Eccentricity w/o Load Factor= $\frac{L}{2} - \frac{\sum M_v - \sum M_F}{\sum V}$

= $\frac{8}{2} - \frac{32.760 - 3.244}{8.190}$ = 0.396

Eccentricity w/ Load Factor = $\frac{L}{2} - \frac{\sum \gamma_{EV} M_v - \sum \gamma_{EH} M_F}{\sum \gamma_{EV} V}$

= $\frac{8}{2} - \frac{47.426 - 4.865}{11.857}$ = 0.410

$\leq \frac{B}{6}$ = 1.410 ft OK

σ_v w/o Load Facto r= $\frac{\sum V}{(L-2e)}$ = $\frac{8.19}{8 - 2 \times 0.39604}$ = 1.136 ksf

σ_v w/ Load Facto r= $\frac{\sum \gamma_{EV} V}{(L-2e)}$ = $\frac{11.86}{8 - 2 \times 0.41035}$ = 1.651 ksf

2. Internal Stability

2.1 Static Load

2.1.1 Compute Kr (LRFD Figure 11.10.6.2.1-3)

γ_{EH}Kr = 1.7 × Ka = 1.7 × 0.28 = 0.48 at 0 ft

γ_{EH}Kr = 1.2 × Ka = 1.2 × 0.28 = 0.34 under 20 ft

Use interpolation at other depth

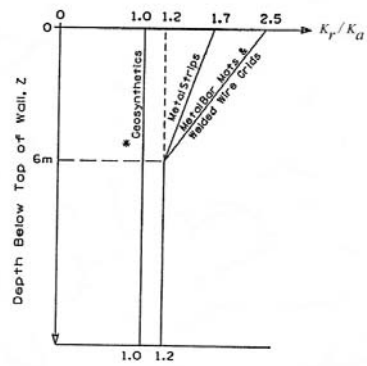

*Does not include polymer strip reinforcement

2.1.2 Fisrt strip at h1 = 2.46 ft

h1 = 2.46 ft

kr = 0.463

1. Vertical stress

1) Reinforced Soil

σ_{V1} = γ_{soil} × H

σ_{V1} = 0.125 (kcf) × 2.460 (ft) = 0.308 kips/ft^2

γ_{EV} × σ_{V1} = 1.35 × 0.308 = 0.415 kips/ft^2

2) Traffic surcharge

σ_{V2} = 0.25 ksf

γ_{EV} × σ_{V2} = 1.75 × 0.25 = 0.438 kips/ft^2

a) ignoring tracffic surcharge

$\sum \sigma_v$ = 0.308 kips/ft^2

$\sum \gamma_{EV}\sigma_v$ = 0.415 kips/ft^2

b) including tracffic surcharge

$\sum \sigma_v$ = 0.558 kips/ft^2

$\sum \gamma_{EV}\sigma_v$ = 0.853 kips/ft^2

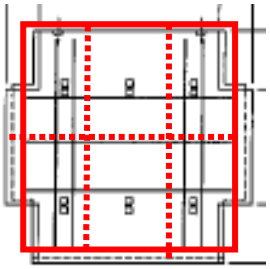

2. Horizontal stress, $\sigma_H = \gamma_P(\sigma_v k_r + \Delta\sigma_H)$ (LRFD Eq. 11.10.6.2.1-1)

a) ignoring tracffic surcharge

σ_h= $\sigma_v k_r$ = 0.308 ksf × 0.463 = 0.142 ksf

$\gamma_{EV}\sigma_h$ = $\gamma_{EV}\sigma_v k_r$ = 0.415 ksf × 0.463 = 0.192 ksf

A_t per strip = 4.870 (ft) × 2.460 (ft) / 3 = 3.993 ft^2

Tmax = $\sigma_H S_v$ = 0.142 ksf × 3.993 ft^2 = **0.57** kips per strip

γ_{EV} Tmax = $\gamma_{EV}\sigma_H S_v$ = 0.192 ksf × 3.993 ft^2 = **0.77** kips per strip

b) including tracffic surcharge

σ_h= σ_v k_r = 0.558 ksf × 0.463 = 0.258 ksf

$\gamma_{EV}\sigma_h$ = γ_{EV} σ_v k_r = 0.853 ksf × 0.463 = 0.395 ksf

Tmax = σ_H S_v = 0.258 ksf × 3.993 ft^2 = **1.03** kips per strip

γ_{EV} Tmax = γ_{EV} σ_H S_v = 0.395 ksf × 3.993 ft^2 = **1.58** kips per strip

3. Resistance in friction of one strip against soil (LRFD Equation 11.10.6.3.2-1)

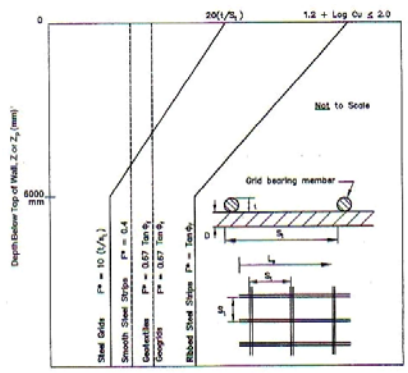

Figure 11.10.6.3.2-1 Default Values for the Pullout Friction Factor, *F.**

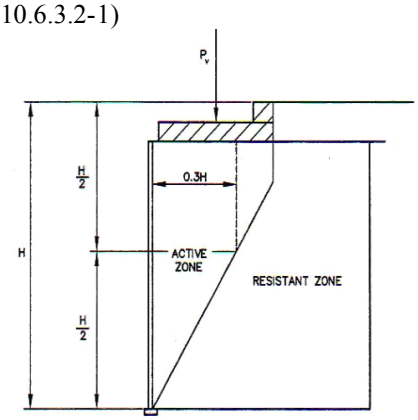

Figure 11.10.10.1-2 Location of Maximum Tensile Force Line in Case of Large Surcharge Slabs (Inextensible Reinforcements).

1) using L_e for static case

P = F^* α σ_v Le C b = **1.138** kips

ϕP = 0.9 × 1.138 = **1.025** kips

2) using L for static + dynamic case

P = F^* α σ_v L C b = **1.483** kips

ϕP = 0.9 × 1.483 = **1.334** kips

a) F^* Kr = 2.000 at 0 ft

Kr = tan ϕ_f = 0.675 under 20 ft

Use interpolation at other depth

F^* = 1.837 (LRFD Figure 11.10.6.3.2-1)

b) α = 1 (LRFD Table 11.10.6.3.2-1)

c) σ_v = 0.125 (kcf) × 2.46 (ft) = 0.3075 ksf

d) L_e= L-H/3 = 8 - 0.3 × 6.19 = 6.143 ft

(LRFD Figure 11.10.2-1 and 11.10.10.1-2)

e) C = 2 for stip (LRFD 11.10.6.3.2)

f) b = 0.164 ft

4. Location of Maximum Tensile Force (LRFD Figure 11.10.10.1-2)

If the height of reinforcement layer is above the H/2, the location of max. tensile force is located in 0.3H.

0.3H = 1.857 ft H/2 = 3.095 ft

$L_{max.}$ = 1.857 ft

2.1.3 Second strip at h2= 4.92 ft

h1 = 4.920 ft

Kr = 0.446

1. Vertical stress

1) Reinforced Soil

σ_{V1} = γ_{soil} × H

σ_{V1} = 0.125 (kcf) × 4.920 (ft) = 0.615 kips/ft^2

γ_{EV} × σ_{V1} = 1.35 × 0.615 = 0.830 kips/ft^2

2) Traffic surcharge

σ_{V2} = 0.25 ksf

γ_{EV} × σ_{V2} = 1.75 × 0.25 = 0.438 kips/ft^2

a) ignoring tracffic surcharge		b) including tracffic surcharge	
$\sum\sigma_v$ =	0.615 kips/ft^2	$\sum\sigma_v$ =	0.865 kips/ft^2
$\sum\gamma_{EV}\sigma_v$ =	0.830 kips/ft^2	$\sum\gamma_{EV}\sigma_v$ =	1.268 kips/ft^2

2. Horizontal stress, $\sigma_H = \gamma_P(\sigma_v k_r + \Delta\sigma_H)$ (LRFD Eq. 11.10.6.2.1-1)

a) ignoring tracffic surcharge

σ_h= $\sigma_v k_r$ = 0.615 ksf × 0.446 = 0.274 ksf

$\gamma_{EV}\sigma_h$ = $\gamma_{EV}\sigma_v k_r$ = 0.830 ksf × 0.446 = 0.370 ksf

A_t per strip = 4.870 (ft) × 2.460 (ft) / 3 = 3.993 ft^2

depth for A_t at the second layer = S_v = 2.460 ft

Tmax = $\sigma_H S_v$ = 0.274 ksf × 3.993 ft^2 = **1.095** kips per strip

γ_{EV} Tmax = $\gamma_{EV}\sigma_H S_v$ = 0.370 ksf × 3.993 ft^2 = **1.478** kips per strip

b) including tracffic surcharge

σ_h= $\sigma_v k_r$ = 0.865 ksf × 0.446 = 0.386 ksf

$\gamma_{EV}\sigma_h$ = $\gamma_{EV}\sigma_v k_r$ = 1.268 ksf × 0.446 = 0.565 ksf

Tmax = $\sigma_H S_v$ = 0.386 ksf × 3.993 ft^2 = **1.54** kips per strip

γ_{EV} Tmax = $\gamma_{EV}\sigma_H S_v$ = 0.565 ksf × 3.993 ft^2 = **2.26** kips per strip

3. Resistance in friction of one strip against soil (LRFD Equation 11.10.6.3.2-1)

1) using L_e for static case

P = $F^* \alpha \sigma_v$ Le C b = **2.445** kips

ϕP = 0.9 × 2.44 = **2.200** kips

2) using L for static + dynamic case

P = $F^* \alpha \sigma_v L C b$ = **2.702** kips

ϕP = 0.9 × 2.702 = **2.432** kips

a) F^* Kr = 2.000 at 0 ft

Kr = $\tan \phi_f$ = 0.675 under 20 ft

Use interpolation at other depth

F^* = 1.674 (LRFD Figure 11.10.6.3.2-1)

b) α = 1 (LRFD Table 11.10.6.3.2-1)

c) σ_v = 0.125 (kcf) × 4.920 (ft) = 0.615 ksf

d) L_e= 7.238 ft (LRFD Figure 11.10.2-1 and 11.10.10.1-2)

e) C = 2 for stip (LRFD 11.10.6.3.2)

f) b = 0.164 ft

4. Location of Maximum Tensile Force (LRFD Figure 11.10.10.1-2)

If the height of reinforcement layer is above the H/2, the location of max. tensile force is located in 0.3H.

0.3H = 1.857 ft H/2 = 3.095 ft

$L_{max.}$ = 0.762 ft

2.1.4 Reinforcement Tensile Strength

1) 75.00 years Design Life

R= $f_y \times A_{steel} = f_y \times$ (Strip width × E_c)

= 60.00 ksi × (1.969 in. × 0.102) in. = 12.016 kips

ϕ R = 0.75 × 12.016 = 9.012 kips

2) 100.00 years Design Life

R= $f_y \times A_{steel} = f_y \times$ (Strip width × E_c)

= 60.00 ksi × (1.969 in. × 0.078) in. = 9.226 kips

ϕ R = 0.75 × 9.226 = 6.919 kips

For corrosion Losses

$E_c = E_n - E_s$ (LRFD Eq. 11.10.6.4.2a-1)

Zinc Coating Lift = 16 years

Loass of carbon steel = 0.012 mm/yr. after zinc deplection

1) 75.00 years Design Life

E_c = 4.00 mm - 1.416 mm = 2.584 mm = 0.102 in.

2) 100.00 years Design Life

E_c = 4.00 mm - 2.016 mm = 1.984 mm = 0.078 in.

2.1.5 Summary

1) Pullout - ignoring traffic surcharge

Rein. Layer NO.	**Z** (ft)	**T** (kips)	**γT** (kips)	**P** (kips)	**ϕP** (kips)
1	2.46	0.569	**0.768**	1.138	**1.025**
2	4.92	1.095	**1.478**	2.445	**2.200**

2) Tensile - ignoring traffic surcharge

				75 year Design Life		100 year Design Life	
Rein. Layer NO.	**Z** (ft)	**T** (kips)	**γT** (kips)	**R** (kips)	**ϕR** (kips)	**R** (kips)	**ϕR** (kips)
1	2.46	0.569	**0.768**	12.016	**9.012**	9.226	**6.919**
2	4.92	1.095	**1.478**				

2.2 Including Impact Load

load (kips)	B_r (length of s (ft)	f (degrees)	45+(ϕ/2) (degrees)	45+(ϕ/2) radian	tan(45+(ϕ/2))	C_r (ft)	$l1$ (ft)
10	4.50	34	62	1.082	1.881	0.000	8.463

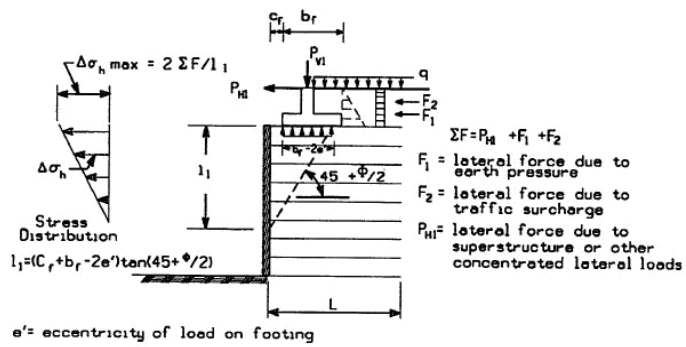

a. Distribution of Stress for Internal Stability Calculations.

2.2.1 Tensile stress

5 ft.-> ∑F = 2 kpf

Rein. Layer NO.	Layer (ft)	$l1$ (ft)	$\Delta\sigma_{h\ max}$ (ksf)	A_t (ft^2)	**T_{impact} (kips)**	**γT_{impact} (kips)**
bottom of sk	1.670	8.463	0.473			
1	2.460	7.673	0.429	3.993	**1.711**	**1.711**
2	4.920	5.213	0.291	3.993	**1.163**	**1.163**

* Summary of Total

					75 year	100 year
Rein. Layer NO.	Z (ft)	γT (kips)	γT_{impact} (kips)	**Total γT (kips)**	**ϕR (kips)**	**ϕR (kips)**
1	2.46	0.569	1.711	**2.280**	**12.016**	**9.226**
2	4.92	1.095	1.163	**2.257**	**12.016**	**9.226**

2.2.2 Pullout stress

20 ft.-> $\sum F =$ 0.5 kpf

Rein. Layer NO.	Layer (ft)	$l1$ (ft)	$\Delta\sigma_{h\ max}$ (ksf)	A_t (ft^2)	**T_{impact} (kips)**	**γT_{impact} (kips)**
bottom of sl	1.670	8.463	0.118			
1	2.460	7.673	0.107	3.993	**0.428**	**0.428**
2	4.920	5.213	0.073	3.993	**0.291**	**0.291**

* Summary of Total

Rein. Layer NO.	Z (ft)	γT (kips)	γT_{impact} (kips)	**Total γT (kips)**	**ϕP** (kips)
1	2.46	0.569	0.428	**0.997**	**1.483**
2	4.92	1.095	0.291	**1.386**	**2.702**

2. 5-ft high MSE wall with 16-ft long strips design

Wall

Wall height,	H =	6.190	ft	1/2 H=	3.095	ft	
Reinforcing fill length,	L =	16.000	ft	Length of slab =	4.500	ft	
	B =	16.458	ft	D_{60}=	6.800 mm	C_u =	90.667
Soil unit weight,	γ_{soil} =	0.125	kcf	D_{10}=	0.075 mm	log C_u =	1.957
Traffic surcharge,	q =	0.25	ksf				
Reinforcement fill, ϕ =		34 degrees	->	0.593	radians		
(LRFD 11.10.6.2)			->	tanϕ =	0.675 ->	Ka =	0.283
Retained fill, ϕ =		30 degrees	->	0.524	radians		
			->	tanϕ_f =	0.577 ->	Kaf =	0.333
Static load =		10 kips					

Panel

First strip location =	2.460	ft	Strip width =	1.969	in. =	0.164	ft
Location of slab bottom =	1.670	ft	Strip thickness =	4	mm =	0.013	ft
Vertical spacing of strips, S_v=	2.460	ft	Horizontal spacing of strip=	2.435	ft		
Panel width =	4.870	ft	Steel Reinforcement Strength f_y =			60	ksi
Panel height =	4.854	ft	density of strip per panel =	4.000			
Panel thickness =	0.458	ft					

Load Factor, γ (LRFD 11.5.5)

1. Typical application

1.a. Bearing Resistance

γ_{EV} = 1.35 γ_{EH} = 1.5

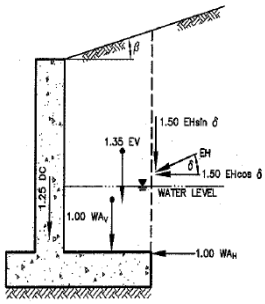

Figure C11.5.5-1 Typical Application of Load Factors for Bearing Resistance.

1.b. Sliding and Eccentricity

γ_{EV} = 1 γ_{EH} = 1.5

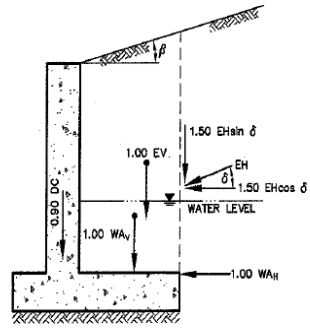

Figure C11.5.5-2 Typical Application of Load Factors for Sliding and Eccentricity.

2. Live Load Surcharge on MSE wall

2.a. Bearing and reinforcement tensile resistnace

γ_{LS} = 1.75

2.b. Sliding, eccentricity and reinforcement pullout resistance

γ_{LS} = 1.75

(LRFD Figure C11.5.5-3(b))

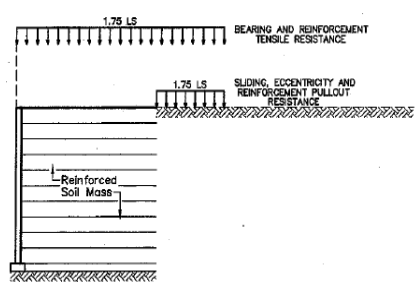

Resistance Factor, ϕ (LRFD Table 11.5.6-1)

Mechanically Stabilized Earth Walls		
Pullout resistance of tensile reinforcement,	Static loading = 0.9	
	Combined static and impact loading =	1
Tensile Resistance of strip reinforcement,	Static loading = 0.75	
	Combined static and impact loading =	1

1. External Stability

1.1 Static Mass Stability

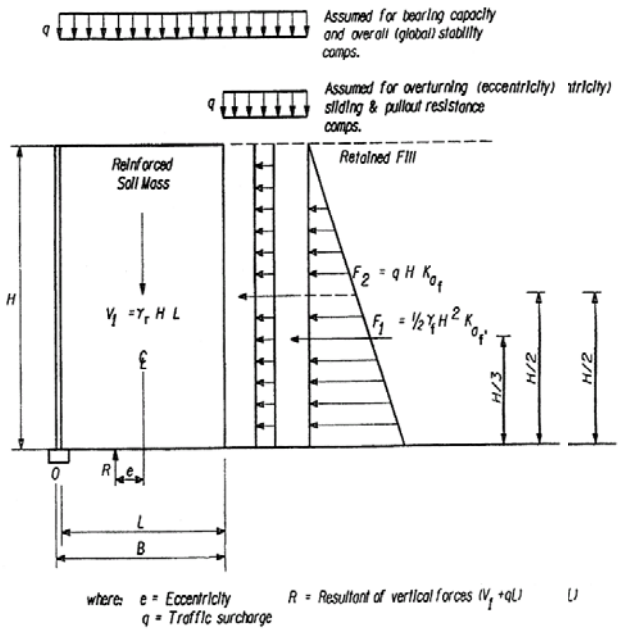

(LRFD Figure 11.10.5.2-1)

1.1.1 Vertical loads

1. Reinforced Soil

V = γ_{soil} × H × L

V1= 0.125 (kcf) × 6.19 (ft) × 16 (ft) = 12.380 kips/ft

γ_{EV} × V1= 1.35 × V1= 16.713 kips/ft

Moment arm of V1 = 8 ft

M_{v1}= 12.38 (kips/ft) × 8 (ft) = 99.040 ft-kips/ft

γ_{EV} × M_{v1}= 1.35 × M_{v1}= 133.704 ft-kips/ft

2. Traffic surcharge

V2= 0.25 (ksf) × 16 (ft) = 4.000 kips/ft

γ_{LS} × V2= 1.75 × V2= 7.000 kips/ft

Moment arm of V2 = 8 ft

M_{v2}= 4 (kips/ft) × 8 (ft) = 32.000 ft-kips/ft

γ_{LS} × M_{v2}= 1.750 × M_{v2}= 56.000 ft-kips/ft

$\sum V$ = 16.38 kips/ft $\sum M_v$ = 131.040 ft-kips/ft

$\sum \gamma V$ = 23.71 kips/ft $\sum \gamma M_v$ = 189.704 ft-kips/ft

1.1.2 Horizontal loads

1. Retained soil

F1= 1/2 × γ_{soil} × H^2 × Kaf

F1= 1/2 × 0.125 (kcf) × 38.316 (ft^2) × 0.333 = 0.798 kips/ft

γ_{EH} × F1= 1.5 × F1= 1.197 kips/ft

Moment arm of F1 = 6.19 /3 = 2.06 ft

M_{F1}= 0.798 (kips/ft) × 2.063 (ft) = 1.647 ft-kips/ft

γ_{EH} × M_{F1}= 1.5 × M_{F1}= 2.471 ft-kips/ft

2. Traffic surcharge

F2= q × H × Kaf

F2= 0.250 (ksf) × 6.190 (ft) × 0.333 = 0.516 kips/ft

γ_{LS} × F2= 1.5 × F2= 0.774 kips/ft

Moment arm of V2 = 3.095 ft

M_{F2}= 0.51583 (kips/ft) × 3.095 (ft) = 1.597 ft-kips/ft

γ_{LS} × M_{F2}= 1.5 × M_{F2}= 2.395 ft-kips/ft

$\sum F$ = 1.31 kips/ft $\sum M_F$ = 3.244 ft-kips/ft

$\sum \gamma F$ = 1.97 kips/ft $\sum \gamma M_F$ = 4.865 ft-kips/ft

1.1.3 Sliding (LRFD 11.10.5.3)

Sliding without Load Factor= $\frac{\sum V*\tan\phi}{\sum F_H}$ = $\frac{16.380 \times \tan 30}{1.314}$ = 7.197

Sliding with Load Factor = $\frac{\sum \gamma_{EV} V*\tan}{\sum \gamma_{EH} F_H}$ = $\frac{23.713 \times \tan 30}{1.971}$ = 6.946

1.1.4 Overturning (LRFD 11.10.5.3)

Overturning w/o Load Factor= $\frac{\sum Mv}{\sum M_F}$ = $\frac{131.040}{3.244}$ = 40.400

Overturning w/ Load Factor= $\frac{\sum \gamma_{EV} M_v}{\sum \gamma_{EH} M_F}$ = $\frac{189.704}{4.865}$ = 38.991

1.2 Bearing Capacity at Base

Eccentricity w/o Load Factor= $\frac{L}{2} - \frac{\sum M_v - \sum M_F}{\sum V}$

= $\frac{16}{2} - \frac{131.040 - 3.244}{16.380}$ = 0.198

Eccentricity w/ Load Factor = $\frac{L}{2} - \frac{\sum \gamma_{EV} M_v - \sum \gamma_{EH} M_F}{\sum \gamma_{EV} V}$

= $\frac{16}{2} - \frac{189.704 - 4.865}{23.713}$ = 0.205

≤ $\frac{B}{6}$ = 2.743 ft OK

σ_v w/o Load Facto r= $\frac{\sum V}{(L-2e)}$ = $\frac{16.38}{16 - 2 \times 0.19802}$ = 1.050 ksf

σ_v w/ Load Facto r= $\frac{\sum \gamma_{EV} V}{(L-2e)}$ = $\frac{23.71}{16 - 2 \times 0.20518}$ = 1.521 ksf

2. Internal Stability

2.1 Static Load

2.1.1 Compute Kr (LRFD Figure 11.10.6.2.1-3)

γ_{EH}Kr = 1.7 × Ka = 1.7 × 0.28

γ_{EH}Kr = 1.2 × Ka = 1.2 × 0.28

Use interpolation at other depth

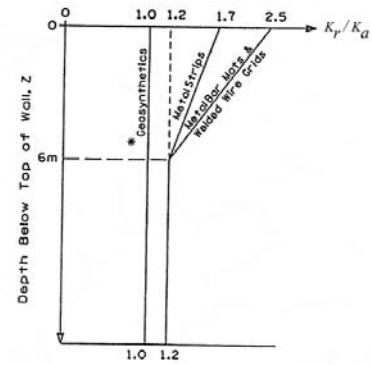

*Does not include polymer strip reinforcement

2.1.2 Fisrt strip at h1 = 2.46 ft

h1 = 2.46 ft

kr = 0.463

1. Vertical stress

a) Reinforced Soil

σ_{V1} = γ_{soil} × H

σ_{V1} = 0.125 (kcf) × 2.460 (ft) = 0.308 kips/ft^2

γ_{EV} × σ_{V1} = 1.35 × 0.308 = 0.415 kips/ft^2

b) Traffic surcharge

σ_{V2} = 0.25 ksf

γ_{EV} × σ_{V2} = 1.75 × 0.25 = 0.438 kips/ft^2

a) ignoring tracffic surcharge		b) including tracffic surcharge	
$\sum\sigma_v$ =	0.308 kips/ft^2	$\sum\sigma_v$ =	0.558 kips/ft^2
$\sum\gamma_{EV}\sigma_v$ =	0.415 kips/ft^2	$\sum\gamma_{EV}\sigma_v$ =	0.853 kips/ft^2

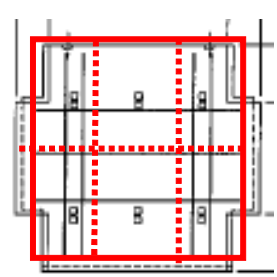

2. Horizontal stress, $\sigma_H = \gamma_P(\sigma_v k_r + \Delta\sigma_H)$ (LRFD Eq. 11.10.6.2.1-1)

a) ignoring tracffic surcharge

σ_h= σ_v k_r = 0.308 ksf × 0.463 = 0.142 ksf

$\gamma_{EV}\sigma_h$ = γ_{EV} σ_v k_r = 0.415 ksf × 0.463 = 0.192 ksf

A_t per strip = 4.870 (ft) × 2.460 (ft) / 2 = 5.990 ft^2

Tmax = σ_H S_v = 0.142 ksf × 5.990 ft^2 = **0.85** kips per strip

γ_{EV} Tmax = γ_{EV} σ_H S_v = 0.192 ksf × 5.990 ft^2 = **1.15** kips per strip

b) including tracffic surcharge

σ_h= σ_v k_r = 0.558 ksf × 0.463 = 0.258 ksf

$\gamma_{EV}\sigma_h$ = γ_{EV} σ_v k_r = 0.853 ksf × 0.463 = 0.395 ksf

Tmax = σ_H S_v = 0.258 ksf × 5.990 ft^2 = **1.55** kips per strip

γ_{EV} Tmax = γ_{EV} σ_H S_v = 0.395 ksf × 5.990 ft^2 = **2.37** kips per strip

3. Resistance in friction of one strip against soil (LRFD Equation 11.10.6.3.2-1)

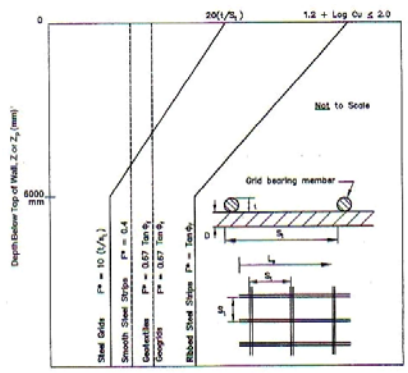

Figure 11.10.6.3.2-1 Default Values for the Pullout Friction Factor, *F.**

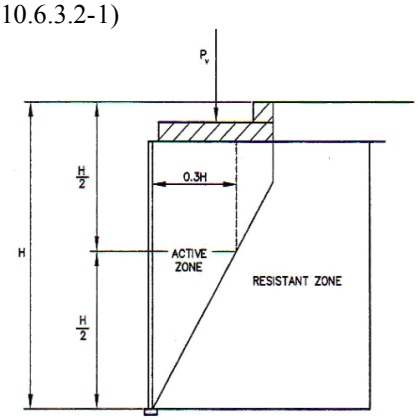

Figure 11.10.10.1-2 Location of Maximum Tensile Force Line in Case of Large Surcharge Slabs (Inextensible Reinforcements).

1) using L_e for static case

P = F^* α σ_v Le C b = **2.621** kips

ϕP = 0.9 × 2.621 = **2.359** kips

2) using L for static + dynamic case

P = F^* α σ_v L C b = **2.965** kips

ϕP = 0.9 × 2.965 = **2.669** kips

a) F^* Kr = 2.000 at 0 ft

Kr = tan ϕ_f = 0.675 under 20 ft

Use interpolation at other depth

F^* = 1.837 (LRFD Figure 11.10.6.3.2-1)

b) α = 1 (LRFD Table 11.10.6.3.2-1)

c) σ_v = 0.125 (kcf) × 2.46 (ft) = 0.3075 ksf

d) L_e= L-H/3 = 16 - 0.3 × 6.19 = 14.143 ft

(LRFD Figure 11.10.2-1 and 11.10.10.1-2)

e) C = 2 for stip (LRFD 11.10.6.3.2)

f) b = 0.164 ft

4. Location of Maximum Tensile Force (LRFD Figure 11.10.10.1-2)

If the height of reinforcement layer is above the H/2, the location of max. tensile force is located in 0.3H.

0.3H = 1.857 ft H/2 = 3.095 ft

$L_{max.}$ = 1.857 ft

2.1.3 Second strip at h2= 4.92 ft

h1 = 4.920 ft

Kr = 0.446

1. Vertical stress

1) Reinforced Soil

σ_{V1} = γ_{soil} × H

σ_{V1} = 0.125 (kcf) × 4.920 (ft) = 0.615 kips/ft^2

γ_{EV} × σ_{V1} = 1.35 × 0.615 = 0.830 kips/ft^2

2) Traffic surcharge

σ_{V2} = 0.25 ksf

γ_{EV} × σ_{V2} = 1.75 × 0.25 = 0.438 kips/ft^2

a) ignoring tracffic surcharge			b) including tracffic surcharge		
$\sum\sigma_v$ =	0.615	kips/ft^2	$\sum\sigma_v$ =	0.865	kips/ft^2
$\sum\gamma_{EV}\sigma_v$ =	0.830	kips/ft^2	$\sum\gamma_{EV}\sigma_v$ =	1.268	kips/ft^2

2. Horizontal stress, $\sigma_H = \gamma_P(\sigma_v k_r + \Delta\sigma_H)$ (LRFD Eq. 11.10.6.2.1-1)

a) ignoring tracffic surcharge

σ_h= $\sigma_v k_r$ = 0.615 ksf × 0.446 = 0.274 ksf

$\gamma_{EV}\sigma_h$ = $\gamma_{EV}\sigma_v k_r$ = 0.830 ksf × 0.446 = 0.370 ksf

A_t per strip = 4.870 (ft) × 2.460 (ft) / 2 = 5.990 ft^2

depth for A_t at the second layer = S_v = 2.460 ft

Tmax = $\sigma_H S_v$ = 0.274 ksf × 5.990 ft^2 = **1.642** kips per strip

γ_{EV} Tmax = $\gamma_{EV}\sigma_H S_v$ = 0.370 ksf × 5.990 ft^2 = **2.217** kips per strip

b) including tracffic surcharge

σ_h= $\sigma_v k_r$ = 0.865 ksf × 0.446 = 0.386 ksf

$\gamma_{EV}\sigma_h$ = $\gamma_{EV}\sigma_v k_r$ = 1.268 ksf × 0.446 = 0.565 ksf

Tmax = $\sigma_H S_v$ = 0.386 ksf × 5.990 ft^2 = **2.31** kips per strip

γ_{EV} Tmax = $\gamma_{EV}\sigma_H S_v$ = 0.565 ksf × 5.990 ft^2 = **3.39** kips per strip

3. Resistance in friction of one strip against soil (LRFD Equation 11.10.6.3.2-1)

1) using L_e for static case

P = $F^* \alpha \sigma_v$ Le C b = **5.147** kips

ϕP = 0.9 × 5.15 = **4.632** kips

2) using L for static + dynamic case

P = $F^* \alpha \sigma_v L C b$ = **5.404** kips

ϕP = 0.9 × 5.404 = **4.864** kips

a) F^* Kr = 2.000 at 0 ft

Kr = $\tan \phi_f$ = 0.675 under 20 ft

Use interpolation at other depth

F^* = 1.674 (LRFD Figure 11.10.6.3.2-1)

b) α = 1 (LRFD Table 11.10.6.3.2-1)

c) σ_v = 0.125 (kcf) × 4.920 (ft) = 0.615 ksf

d) L_e= 15.238 ft (LRFD Figure 11.10.2-1 and 11.10.10.1-2)

e) C = 2 for stip (LRFD 11.10.6.3.2)

f) b = 0.164 ft

4. Location of Maximum Tensile Force (LRFD Figure 11.10.10.1-2)

If the height of reinforcement layer is above the H/2, the location of max. tensile force is located in 0.3H.

0.3H = 1.857 ft H/2 = 3.095 ft

$L_{max.}$ = 0.762 ft

2.1.4 Reinforcement Tensile Strength

1) 75.00 years Design Life

R= $f_y \times A_{steel} = f_y \times$ (Strip width × E_c)

= 60.00 ksi × (1.969 in. × 0.102) in. = 12.016 kips

ϕ R = 0.75 × 12.016 = 9.012 kips

2) 100.00 years Design Life

R= $f_y \times A_{steel} = f_y \times$ (Strip width × E_c)

= 60.00 ksi × (1.969 in. × 0.078) in. = 9.226 kips

ϕ R = 0.75 × 9.226 = 6.919 kips

For corrosion Losses

$E_c = E_n - E_s$ (LRFD Eq. 11.10.6.4.2a-1)

Zinc Coating Lift = 16 years

Loass of carbon steel = 0.012 mm/yr. after zinc deplection

1) 75.00 years Design Life

E_c = 4.00 mm - 1.416 mm = 2.584 mm = 0.102 in.

2) 100.00 years Design Life

E_c = 4.00 mm - 2.016 mm = 1.984 mm = 0.078 in.

2.1.5 Summary

1. Pullout - ignoring traffic surcharge

Rein. Layer NO.	**Z** (ft)	**T** (kips)	**γT** (kips)	**P** (kips)	**ϕP** (kips)
1	2.46	0.853	**1.152**	2.621	**2.359**
2	4.92	1.642	**2.217**	5.147	**4.632**

2. Tensile - ignoring traffic surcharge

				75 year Design Life		100 year Design Life	
Rein. Layer NO.	**Z** (ft)	**T** (kips)	**γT** (kips)	**R** (kips)	**ϕR** (kips)	**R** (kips)	**ϕR** (kips)
1	2.46	0.853	**1.152**	12.016	**9.012**	9.226	**6.919**
2	4.92	1.642	**2.217**				

2.2 Including Impact Load

load (kips)	B_r (length of : (ft)	f (degrees)	45+(ϕ/2) (degrees)	45+(ϕ/2) radian	tan(45+(ϕ/2))	C_r (ft)	$l1$ (ft)
10	4.50	34	62	1.082	1.881	0.000	8.463

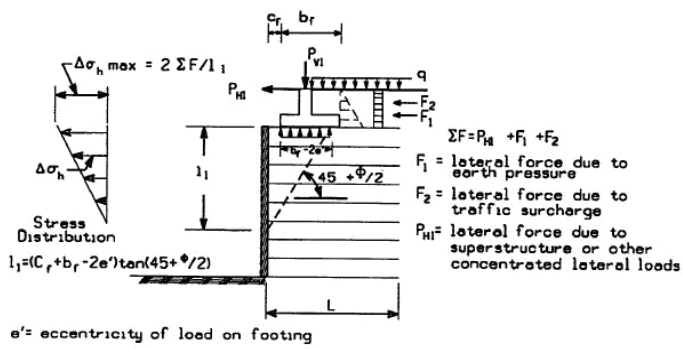

a. Distribution of Stress for Internal Stability Calculations.

2.2.1 Tensile stress

5 ft.-> ∑F = 2 kpf

Rein. Layer NO.	Layer (ft)	$l1$ (ft)	$\Delta\sigma_{h\ max}$ (ksf)	A_t (ft^2)	**T_{impact} (kips)**	**γT_{impact} (kips)**
bottom of sk	1.670	8.463	0.473			
1	2.460	7.673	0.429	5.990	**2.567**	**2.567**
2	4.920	5.213	0.291	5.990	**1.744**	**1.744**

* Summary of Total

Rein. Layer NO.	Z (ft)	γT (kips)	γT_{impact} (kips)	**Total γT (kips)**	**75 year ϕR (kips)**	**100 year ϕR (kips)**
1	2.46	0.853	2.567	**3.420**	**12.016**	**9.226**
2	4.92	1.642	1.744	**3.386**	**12.016**	**9.226**

2.2.2 Pullout stress

20 ft.-> $\sum F =$ 0.5 kpf

Rein. Layer NO.	Layer (ft)	$l1$ (ft)	$\Delta\sigma_{h\ max}$ (ksf)	A_t (ft^2)	**T_{impact} (kips)**	**γT_{impact} (kips)**
bottom of sl	1.670	8.463	0.118			
1	2.460	7.673	0.107	5.990	**0.642**	**0.642**
2	4.920	5.213	0.073	5.990	**0.436**	**0.436**

* Summary of Total

Rein. Layer NO.	Z (ft)	γT (kips)	γT_{impact} (kips)	**Total γT (kips)**	**ϕP** (kips)
1	2.46	0.853	0.642	**1.495**	**2.965**
2	4.92	1.642	0.436	**2.078**	**5.404**

3. 10-ft high MSE wall with 10-ft long strips design

Wall									
Wall height,	H =	9.15	ft	1/2 H=		4.575	ft		
Reinforcing fill length,	L =	10	ft	Length of slab =		4.500	ft		
	B =	10.458	ft	D_{60}=	1.100	mm		C_u =	4.400
Soil unit weight,	γ_{soil} =	0.125	kcf	D_{10}=	0.250	mm		log C_u =	0.643
Traffic surcharge,	q =	0.25	ksf						
Reinforcement fill, ϕ =		34 degrees	->	0.593	radians				
(LRFD 11.10.6.2)			->	tanϕ =	0.675	->		Ka =	0.283
Retained fill, ϕ =		30 degrees	->	0.524	radians				
			->	tanϕ_f =	0.577	->		Kaf =	0.333
Static load =		10 kips							
Panel									
First strip location =		3.000	ft	Strip width =		1.969	in. =	0.164	ft
Location of slab bottom =		2.000	ft	Strip thickness =		4	mm =	0.013	ft
Vertical spacing of strips, S_v=		2.460	ft	Horizontal spacing of strip=		1.623	ft		
Panel width =		4.870	ft	Steel Reinforcement Strength f_y =				60	ksi
Panel height =		4.854	ft	density of strip per panel =		6			
Panel thickness =		0.458	ft						

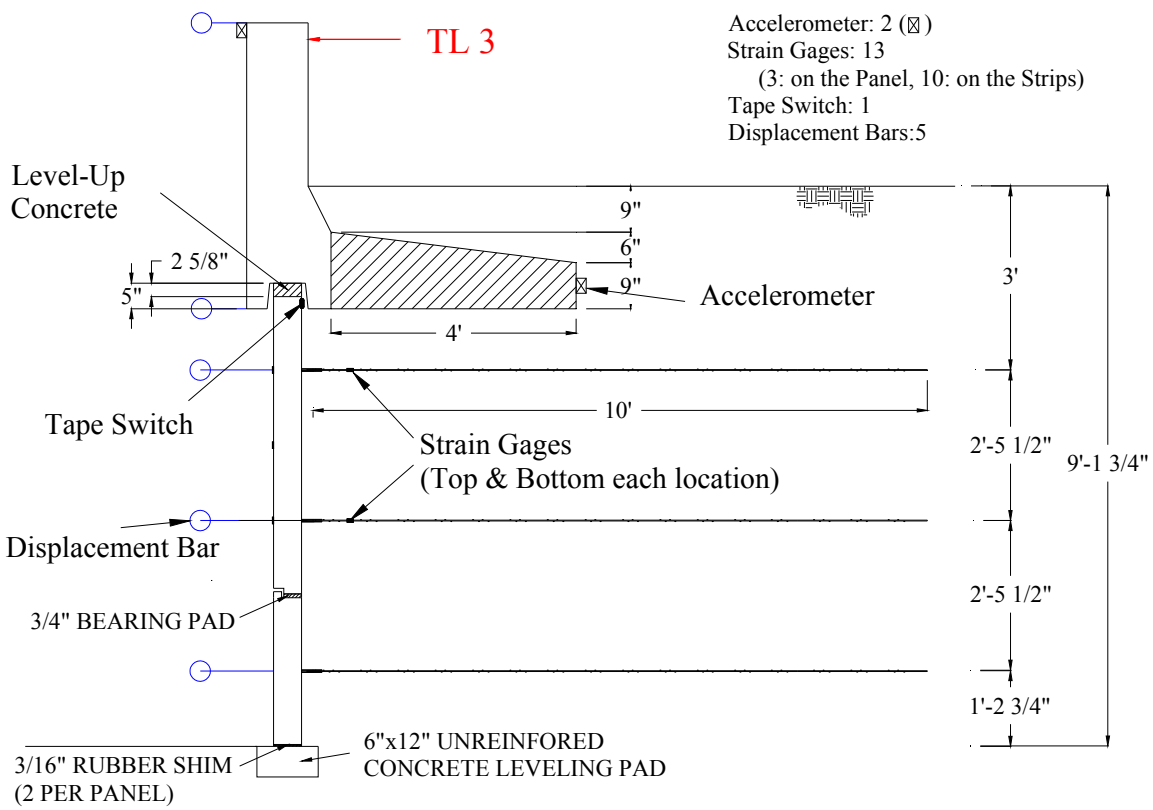

Load Factor, γ (LRFD 11.5.5)

1. Typical application

1.a. Bearing Resistance

γ_{EV} = 1.35 γ_{EH} = 1.5

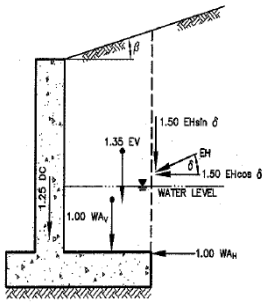

Figure C11.5.5-1 Typical Application of Load Factors for Bearing Resistance.

1.b. Sliding and Eccentricity

γ_{EV} = 1 γ_{EH} = 1.5

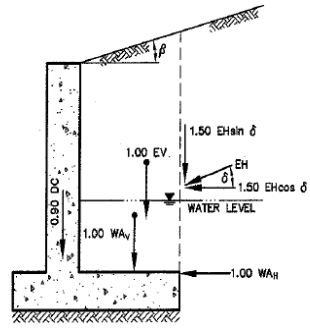

Figure C11.5.5-2 Typical Application of Load Factors for Sliding and Eccentricity.

2. Live Load Surcharge on MSE wall

2.a. Bearing and reinforcement tensile resistnace

γ_{LS} = 1.75

2.b. Sliding, eccentricity and reinforcement pullout resistance

γ_{LS} = 1.75

(LRFD Figure C11.5.5-3(b))

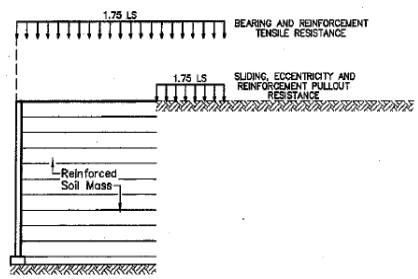

Resistance Factor, ϕ (LRFD Table 11.5.6-1)

Mechanically Stabilized Earth Walls		
Pullout resistance of tensile reinforcement,	Static loading =	0.9
	Combined static and impact loading =	1
Tensile Resistance of strip reinforcement,	Static loading =	0.75
	Combined static and impact loading =	1

1. External Stability

1.1 Static Mass Stability

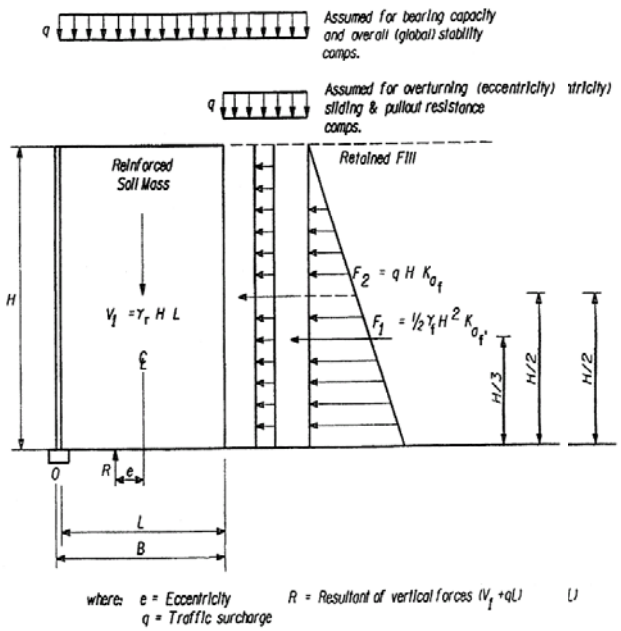

(LRFD Figure 11.10.5.2-1)

1.1.1 Vertical loads

1. Reinforced Soil

V = γ_{soil} × H × L

V1= 0.125 (kcf) × 9.15 (ft) × 10 (ft) = 11.438 kips/ft

γ_{EV} × V1= 1.35 × V1= 15.441 kips/ft

Moment arm of V1 = 5 ft

M_{v1}= 11.44 (kips/ft) × 5 (ft) = 57.188 ft-kips/ft

γ_{EV} × M_{v1}= 1.35 × M_{v1}= 77.203 ft-kips/ft

2. Traffic surcharge

V2= 0.25 (ksf) × 10 (ft) = 2.500 kips/ft

γ_{LS} × V2= 1.75 × V2= 4.375 kips/ft

Moment arm of V2 = 5 ft

M_{v2}= 2.5 (kips/ft) × 5 (ft) = 12.500 ft-kips/ft

γ_{LS} × M_{v2}= 1.750 × M_{v2}= 21.875 ft-kips/ft

$\sum V$ = 13.94 kips/ft $\sum M_v$ = 69.688 ft-kips/ft

$\sum \gamma V$ = 19.82 kips/ft $\sum \gamma M_v$ = 99.078 ft-kips/ft

1.1.2 Horizontal loads

1. Retained soil

F1= 1/2 × γ_{soil} × H^2 × Kaf

F1= 1/2 × 0.125 (kcf) × 83.723 (ft^2) × 0.333 = 1.744 kips/ft

γ_{EH} × F1= 1.5 × F1= 2.616 kips/ft

Moment arm of F1 = 9.15 /3 = 3.05 ft

M_{F1}= 1.744 (kips/ft) × 3.050 (ft) = 5.320 ft-kips/ft

γ_{EH} × M_{F1}= 1.5 × M_{F1}= 7.980 ft-kips/ft

2. Traffic surcharge

F2= q × H × Kaf

F2= 0.250 (ksf) × 9.150 (ft) × 0.333 = 0.763 kips/ft

γ_{LS} × F2= 1.5 × F2= 1.144 kips/ft

Moment arm of V2 = 4.575 ft

M_{F2}= 0.7625 (kips/ft) × 4.575 (ft) = 3.488 ft-kips/ft

γ_{LS} × M_{F2}= 1.5 × M_{F2}= 5.233 ft-kips/ft

$\sum F$ = 2.51 kips/ft $\sum M_F$ = 8.808 ft-kips/ft

$\sum \gamma F$ = 3.76 kips/ft $\sum \gamma M_F$ = 13.212 ft-kips/ft

1.1.3 Sliding (LRFD 11.10.5.3)

Sliding without Load Factor= $\frac{\sum V^*\tan\phi}{\sum F_H}$ = $\frac{13.938 \times \tan 30}{2.507}$ = 3.210

Sliding with Load Factor = $\frac{\sum \gamma_{EV} V^*\tan}{\sum \gamma_{EH} F_H}$ = $\frac{19.816 \times \tan 30}{3.760}$ = 3.043

1.1.4 Overturning (LRFD 11.10.5.3)

Overturning w/o Load Factor= $\frac{\sum Mv}{\sum M_F}$ = $\frac{69.688}{8.808}$ = 7.912

Overturning w/ Load Factor= $\frac{\sum \gamma_{EV} M_v}{\sum \gamma_{EH} M_F}$ = $\frac{99.078}{13.212}$ = 7.499

1.2 Bearing Capacity at Base

Eccentricity w/o Load Factor= $\frac{L}{2} - \frac{\sum M_v - \sum M_F}{\sum V}$

= $\frac{10}{2} - \frac{69.688 - 8.808}{13.938}$ = 0.632

Eccentricity w/ Load Factor = $\frac{L}{2} - \frac{\sum \gamma_{EV} M_v - \sum \gamma_{EH} M_F}{\sum \gamma_{EV} V}$

= $\frac{10}{2} - \frac{99.078 - 13.212}{19.816}$ = 0.667

$\leq \frac{B}{6}$ = 1.743 ft OK

σ_v w/o Load Facto r= $\frac{\sum V}{(L-2e)}$ = $\frac{13.94}{10 - 2 \times 0.63199}$ = 1.595 ksf

σ_v w/ Load Facto r= $\frac{\sum \gamma_{EV} V}{(L-2e)}$ = $\frac{19.82}{10 - 2 \times 0.66677}$ = 2.286 ksf

2. Internal Stability

2.1 Static Load

2.1.1 Compute Kr (LRFD Figure 11.10.6.2.1-3)

γ_{EH}Kr =	1.7 × Ka =	1.7 ×	0.28	=	0.48 at 0 ft	
γ_{EH}Kr =	1.2 × Ka =	1.2 ×	0.28	=	0.34 under	20 ft

Use interpolation at other depth

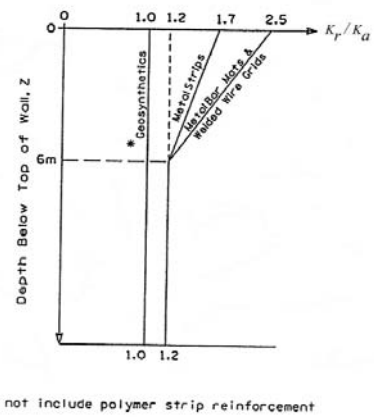

2.1.2 Fisrt strip at h1 = 3.00 ft

h1 = 3.00 ft

kr = 0.459

1. Vertical stress

1) Reinforced Soil

σ_{V1} = γ_{soil} × H

σ_{V1} = 0.125 (kcf) × 3.000 (ft) = 0.375 kips/ft^2

γ_{EV} × σ_{V1} = 1.35 × 0.375 = 0.506 kips/ft^2

2) Traffic surcharge

σ_{V2} = 0.25 ksf

γ_{EV} × σ_{V2} = 1.75 × 0.25 = 0.438 kips/ft^2

a) ignoring tracffic surcharge		b) including tracffic surcharge	
$\sum\sigma_v$ =	0.375 kips/ft^2	$\sum\sigma_v$ =	0.625 kips/ft^2
$\sum\gamma_{EV}\sigma_v$ =	0.506 kips/ft^2	$\sum\gamma_{EV}\sigma_v$ =	0.944 kips/ft^2

2. Horizontal stress, $\sigma_H = \gamma_P(\sigma_v k_r + \Delta\sigma_H)$ (LRFD Eq. 11.10.6.2.1-1)

a) ignoring tracffic surcharge

σ_h= σ_v k_r = 0.375 ksf × 0.459 = 0.172 ksf

$\gamma_{EV}\sigma_h$ = γ_{EV} σ_v k_r = 0.506 ksf × 0.459 = 0.233 ksf

A_t per strip = 4.870 (ft) × 2.460 (ft) / 3 = 3.993 ft^2

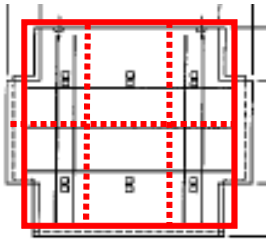

Tmax = σ_H S_v = 0.172 ksf × 3.993 ft^2 = **0.69** kips per strip

γ_{EV} Tmax = γ_{EV} σ_H S_v = 0.233 ksf × 3.993 ft^2 = **0.93** kips per strip

b) including tracffic surcharge

σ_h= σ_v k_r = 0.625 ksf × 0.459 = 0.287 ksf

$\gamma_{EV}\sigma_h$ = γ_{EV} σ_v k_r = 0.944 ksf × 0.459 = 0.434 ksf

Tmax = σ_H S_v = 0.287 ksf × 3.993 ft^2 = **1.15** kips per strip

γ_{EV} Tmax = γ_{EV} σ_H S_v = 0.434 ksf × 3.993 ft^2 = **1.73** kips per strip

3. Resistance in friction of one strip against soil (LRFD Equation 11.10.6.3.2-1)

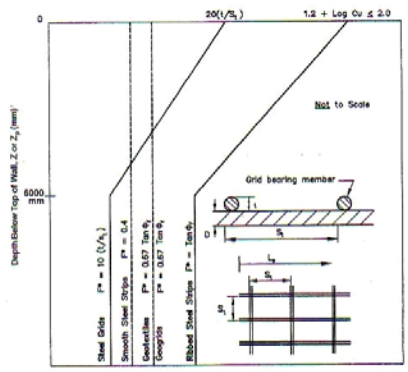

Figure 11.10.6.3.2-1 Default Values for the Pullout Friction Factor, *F.**

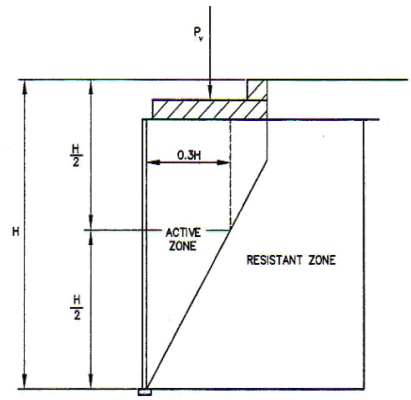

Figure 11.10.10.1-2 Location of Maximum Tensile Force Line in Case of Large Surcharge Slabs (Inextensible Reinforcements).

1) using L_e for static case

P = F^* α σ_v Le C b = **1.489** kips

ϕP = 0.9 × 1.489 = **1.340** kips

2) using L for static + dynamic case

P = F^* α σ_v L C b = **2.052** kips

ϕP = 0.9 × 2.052 = **1.847** kips

a) F^* Kr = 1.843 at 0 ft

Kr = tan ϕ_f = 0.675 under 20 ft

Use interpolation at other depth

F^* = 1.668 (LRFD Figure 11.10.6.3.2-1)

b) α = 1 (LRFD Table 11.10.6.3.2-1)

c) σ_v = 0.125 (kcf) × 3.00 (ft) = 0.375 ksf

d) L_e= L-H/3 = 10 - 0.3 × 9.15 = 7.255 ft

(LRFD Figure 11.10.2-1 and 11.10.10.1-2)

e) C = 2 for stip (LRFD 11.10.6.3.2)

f) b = 0.164 ft

4. Location of Maximum Tensile Force (LRFD Figure 11.10.10.1-2)

If the height of reinforcement layer is above the H/2, the location of max. tensile force is located in 0.3H.

0.3H = 2.745 ft H/2 = 4.575 ft

$L_{max.}$ = 2.745 ft

2.1.3 Second strip at h2= 5.46 ft

h1 = 5.460 ft

Kr = 0.442

1. Vertical stress

1) Reinforced Soil

$\sigma_{V1} = \gamma_{soil} \times H$

$\sigma_{V1} =$ 0.125 (kcf) × 5.460 (ft) = 0.683 kips/ft^2

$\gamma_{EV} \times \sigma_{V1} =$ 1.35 × 0.683 = 0.921 kips/ft^2

2) Traffic surcharge

$\sigma_{V2} =$ 0.25 ksf

$\gamma_{EV} \times \sigma_{V2} =$ 1.75 × 0.25 = 0.438 kips/ft^2

a) ignoring tracffic surcharge		b) including tracffic surcharge	
$\sum\sigma_v =$	0.683 kips/ft^2	$\sum\sigma_v =$	0.933 kips/ft^2
$\sum\gamma_{EV}\sigma_v =$	0.921 kips/ft^2	$\sum\gamma_{EV}\sigma_v =$	1.359 kips/ft^2

2. Horizontal stress, $\sigma_H = \gamma_P(\sigma_v k_r + \Delta\sigma_H)$ (LRFD Eq. 11.10.6.2.1-1)

a) ignoring tracffic surcharge

$\sigma_h = \sigma_v k_r =$ 0.683 ksf × 0.442 = 0.302 ksf

$\gamma_{EV}\sigma_h = \gamma_{EV}\sigma_v k_r =$ 0.921 ksf × 0.442 = 0.407 ksf

A_t per strip = 4.870 (ft) × 2.460 (ft) / 3 = 3.993 ft^2

depth for A_t at the second layer = S_v = 2.460 ft

$T_{max} = \sigma_H S_v =$ 0.302 ksf × 3.993 ft^2 = **1.205** kips per strip

$\gamma_{EV} T_{max} = \gamma_{EV}\sigma_H S_v =$ 0.407 ksf × 3.993 ft^2 = **1.626** kips per strip

b) including tracffic surcharge

$\sigma_h = \sigma_v k_r =$ 0.933 ksf × 0.442 = 0.412 ksf

$\gamma_{EV}\sigma_h = \gamma_{EV}\sigma_v k_r =$ 1.359 ksf × 0.442 = 0.601 ksf

$T_{max} = \sigma_H S_v =$ 0.412 ksf × 3.993 ft^2 = **1.65** kips per strip

$\gamma_{EV} T_{max} = \gamma_{EV}\sigma_H S_v =$ 0.601 ksf × 3.993 ft^2 = **2.40** kips per strip

3. Resistance in friction of one strip against soil (LRFD Equation 11.10.6.3.2-1)

1) using L_e for static case

$P = F^* \alpha \sigma_v Le C b =$ **2.658** kips

$\phi P =$ 0.9 × 2.66 = **2.392** kips

2) using L for static + dynamic case

P = $F^* \alpha \sigma_v L C b$ = **3.413** kips

ϕP = 0.9 × 3.413 = **3.072** kips

a) F^* Kr = 1.843 at 0 ft

Kr = $\tan \phi_f$ = 0.675 under 20 ft

Use interpolation at other depth

F^* = 1.524 (LRFD Figure 11.10.6.3.2-1)

b) α = 1 (LRFD Table 11.10.6.3.2-1)

c) σ_v = 0.125 (kcf) × 5.460 (ft) = 0.683 ksf

d) L_e= 7.786 ft (LRFD Figure 11.10.2-1 and 11.10.10.1-2)

e) C = 2 for stip (LRFD 11.10.6.3.2)

f) b = 0.164 ft

4. Location of Maximum Tensile Force (LRFD Figure 11.10.10.1-2)

If the height of reinforcement layer is above the H/2, the location of max. tensile force is located in 0.3H.

0.3H = 2.745 ft H/2 = 4.575 ft

$L_{max.}$ = 2.214 ft

2.1.4 Third strip at h3= 7.920 ft

h1 = 7.920 ft

Kr = 0.425

1. Vertical stress

1) Reinforced Soil

$\sigma_{V1} = \gamma_{soil} \times H$

σ_{V1} = 0.125 (kcf) × 7.920 (ft) = 0.990 kips/ft^2

$\gamma_{EV} \times \sigma_{V1}$ = 1.35 × 0.990 = 1.337 kips/ft^2

2) Traffic surcharge

σ_{V2} = 0.25 ksf

$\gamma_{EV} \times \sigma_{V2}$ = 1.75 × 0.25 = 0.438 kips/ft^2

a) ignoring tracffic surcharge		b) including tracffic surcharge	
$\sum \sigma_v$ =	0.990 kips/ft^2	$\sum \sigma_v$ =	1.240 kips/ft^2
$\sum \gamma_{EV}\sigma_v$ =	1.337 kips/ft^2	$\sum \gamma_{EV}\sigma_v$ =	1.774 kips/ft^2

2. Horizontal stress, $\sigma_H = \gamma_P(\sigma_v k_r + \Delta\sigma_H)$ (LRFD Eq. 11.10.6.2.1-1)

a) ignoring tracffic surcharge

σ_h= $\sigma_v k_r$ = 0.990 ksf × 0.425 = 0.420 ksf

$\gamma_{EV}\sigma_h$ = $\gamma_{EV} \sigma_v k_r$ = 1.337 ksf × 0.425 = 0.568 ksf

A_t per strip = 4.870 (ft) × 2.460 (ft) / 3 = 3.993 ft^2

depth for A_t at the second layer = S_v / 2 + 1.23 = 1.230 + 1.230

= 2.460 ft

$T_{max} = \sigma_H S_v =$ 0.420 ksf × 3.993 ft^2 = **1.679** kips per strip

$\gamma_{EV} T_{max} = \gamma_{EV} \sigma_H S_v =$ 0.568 ksf × 3.993 ft^2 = **2.266** kips per strip

b) including tracffic surcharge

$\sigma_h =$ $\sigma_v k_r =$ 1.240 ksf × 0.425 = 0.527 ksf

$\gamma_{EV}\sigma_h =$ $\gamma_{EV} \sigma_v k_r =$ 1.774 ksf × 0.425 = 0.753 ksf

$T_{max} = \sigma_H S_v =$ 0.527 ksf × 3.993 ft^2 = **2.10** kips per strip

$\gamma_{EV} T_{max} = \gamma_{EV} \sigma_H S_v =$ 0.753 ksf × 3.993 ft^2 = **3.01** kips per strip

3. Resistance in friction of one strip against soil (LRFD Equation 11.10.6.3.2-1)

1) using L_e for static case

$P = F^* \alpha \sigma_v Le C b$ = **4.153** kips

$\phi P =$ 0.9 × 4.15 = **3.738** kips

2) using L for static + dynamic case

$P = F^* \alpha \sigma_v L C b$ = **4.484** kips

$\phi P =$ 0.9 × 4.484 = **4.036** kips

a) F^* Kr = 1.843 at 0 ft

Kr = $\tan \phi_f$ = 0.675 under 20 ft

Use interpolation at other depth

$F^* =$ 1.381 (LRFD Figure 11.10.6.3.2-1)

b) $\alpha =$ 1 (LRFD Table 11.10.6.3.2-1)

c) $\sigma_v =$ 0.125 (kcf) × 7.920 (ft) = 0.990 ksf

d) $L_e =$ 9.262 ft (LRFD Figure 11.10.2-1 and 11.10.10.1-2)

e) C = 2 for stip (LRFD 11.10.6.3.2)

f) b = 0.164 ft

4. Location of Maximum Tensile Force (LRFD Figure 11.10.10.1-2)

If the height of reinforcement layer is above the H/2, the location of max. tensile force is located in 0.3H.

0.3H = 2.75 ft H/2 = 4.58 ft

$L_{max.} =$ 0.74 ft

2.1.5 Reinforcement Tensile Strength

1) 75.00 years Design Life

$R = f_y \times A_{steel} = f_y \times$ (Strip width × E_c)

= 60.00 ksi × (1.969 in. × 0.102) in. = 12.016 kips

$\phi R =$ 0.75 × 12.016 = 9.012 kips

2) 100.00 years Design Life

$R = f_y \times A_{steel} = f_y \times (\text{Strip width} \times E_c)$

= 60.00 ksi × (1.969 in. × 0.078) in. = 9.226 kips

ϕR = 0.75 × 9.226 = 6.919 kips

For corrosion Losses

$E_c = E_n - E_s$ (LRFD Eq. 11.10.6.4.2a-1)

Zinc Coating Lift = 16 years

Loass of carbon steel = 0.012 mm/yr. after zinc deplection

1) 75.00 years Design Life

E_c = 4.00 mm - 1.416 mm = 2.584 mm = 0.102 in.

2) 100.00 years Design Life

E_c = 4.00 mm - 2.016 mm = 1.984 mm = 0.078 in.

2.1.6 Summary

1) Pullout - ignoring traffic surcharge

Rein. Layer NO.	Z (ft)	T (kips)	γT (kips)	P (kips)	ϕP (kips)
1	3.00	0.688	**0.929**	1.489	**1.340**
2	5.46	1.205	**1.626**	2.658	**2.392**
3	7.92	1.679	**2.266**	4.153	**3.738**

2) Tensile - ignoring traffic surcharge

				75 year Design Life		100 year Design Life	
Rein. Layer NO.	Z (ft)	T (kips)	γT (kips)	R (kips)	ϕR (kips)	R (kips)	ϕR (kips)
1	3.00	0.688	**0.929**	12.016	**9.012**	9.226	**6.919**
2	5.46	1.205	**1.626**				
3	7.92	1.679	**2.266**				

2.2 Including Impact Load

load (kips)	B_r (length of : (ft)	f (degrees)	45+(ϕ/2) (degrees)	45+(ϕ/2) radian	tan(45+(ϕ/2))	C_r (ft)	$l1$ (ft)
10	4.50	34	62	1.082	1.881	0.000	8.463

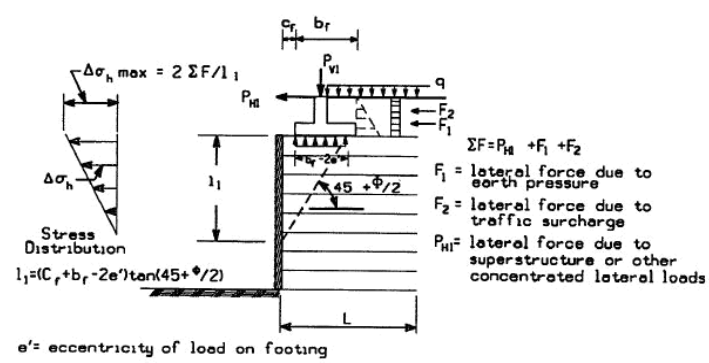

a. Distribution of Stress for Internal Stability Calculations.

2.2.1 Tensile stress

5 ft.-> $\sum F =$ 2 kpf

Rein. Layer NO.	Layer (ft)	$l1$ (ft)	$\Delta\sigma_{h\ max}$ (ksf)	A_t (ft^2)	**T_{impact} (kips)**	**γT_{impact} (kips)**
bottom of sk	2.000	8.463	0.473			
1	3.000	7.463	0.417	3.993	**1.664**	**1.664**
2	5.460	5.003	0.279	3.993	**1.116**	**1.116**
3	7.920	2.543	0.142	3.993	**0.567**	**0.567**

* Summary of Total

Rein. Layer NO.	Z (ft)	γT (kips)	γT_{impact} (kips)	**Total γT (kips)**	**75 year ϕR (kips)**	**100 year ϕR (kips)**
1	3	0.688	1.664	**2.352**	**12.016**	**9.226**
2	5.46	1.205	1.116	**2.320**	**12.016**	**9.226**
3	7.92	1.679	0.567	**2.246**	**12.016**	**9.226**

2.2.2 Pullout stress

20 ft.-> $\sum F =$ 0.5 kpf

Rein. Layer NO.	Layer (ft)	$l1$ (ft)	$\Delta\sigma_{h\ max}$ (ksf)	A_t (ft^2)	**T_{impact} (kips)**	**γT_{impact} (kips)**
bottom of sk	2.000	8.463	0.118			
1	3.000	7.463	0.104	3.993	**0.416**	**0.416**
2	5.460	5.003	0.070	3.993	**0.279**	**0.279**
3	7.920	2.543	0.036	3.993	**0.142**	**0.142**

* Summary of Total

Rein. Layer NO.	Z (ft)	γT (kips)	γT_{impact} (kips)	**Total γT (kips)**	**ϕP** (kips)
1	3	0.688	0.416	**1.104**	**2.052**
2	5.46	1.205	0.279	**1.484**	**3.413**
3	7.92	1.679	0.142	**1.821**	**4.484**

APPENDIX B: STATE-OF-PRACTICE SURVEY

Name: ____ **Title: ____**

Agency Name & Address: ____
____
____
____

Instructions (for electronic completion of survey):

For fill-in responses: You may enter your response by either tabbing through the form or by clicking on the shaded area. Please use as much space as needed to explain a selection of "Other."

For check boxes: To check or uncheck a box, either type an "X" in the box or click on the box with your mouse. Unless noted otherwise, you can check more than one box for each item.

MSE Walls

1) Estimate percentage of each type of reinforcement used in MSE walls in your state:

Steel strips	_____%	Wire mesh/bar mats	_____%
Geosynthetic grids	_____%	Other (explain)	_____% _____

2) Estimate percentage of each type of facing panel used in your state:

Concrete panel	_____%	Modular block	_____%
Other (explain)	_____% _____		

3) Estimate percentage of each type of facing panel connection used in your state:

Dowels	_____%	Tongue & Groove	_____%
Ship Lap	_____%	Other (explain)	_____% _____

Please provide standards and specifications for MSE walls used in your state (including soil backfill, panels, and reinforcement)

Barriers

4) Estimate percentage of each category of barrier used atop MSE walls in your state:
Guardrail (post mounted) _____% Bridge Rail (slab/pavement attached) _____%

5) Estimate percentage of each type of guardrail used atop MSE walls in your state:
Strong post W-beam _____% Weak post W-beam _____%
Thrie beam _____% Box beam _____%
Cable _____% Other (explain) _____% _____

6) Estimate percentage of each type of bridge rail used atop MSE walls in your state:
Concrete safety shape (N.J., F-shape, single slope) _____%
Vertical concrete wall _____% Concrete beam & post _____%
Concrete parapet w/ steel rail _____% Steel _____%
Other (explain) _____% _____

7) Estimate percentage of precast barrier versus cast-in-place barrier used atop MSE walls in your state:
Precast coping & barrier unit _____% Precast coping with cast-in-place barrier _____%
Cast-in-place coping & barrier _____% Other (explain) _____% _____

8) If precast barrier used, please specify minimum segment length allowed _____

Please provide standard detail sheets for each type of barrier used atop MSE walls in your state.

Barrier Connection to Wall/Pavement

9) Estimate percentage of each type of pavement used in your state in conjunction with MSE wall applications:
RCP _____% ACP _____%

<u>Please answer the following in regard to post-mounted guardrail placed atop MSE walls:</u>

10) Lateral offset of guardrail from edge of wall _____

<u>Please answer the following in regard to slab-attached bridge rails placed atop MSE walls:</u>

For ACP pavement applications:

11) Thickness of barrier/slab footing _____ 12) Width of slab/footing _____
13) Is barrier/slab footing continuous ☐ or jointed ☐?
14) If jointed, what is joint spacing? _____
15) Is barrier flush with wall ☐ Offset from face of wall ☐
16) If offset, by what distance? _____

17) Is wall panel coped/recessed into bottom of coping? No ☐ Yes ☐
18) If yes, by how much? _____
19) Is lateral and vertical barrier movement connected ☐ or disconnected/isolated ☐ from wall panel?

For RCP pavement applications:

20) Thickness of barrier/slab footing _____ 21) Width of slab/footing _____
22) Is barrier/slab footing continuous ☐ or jointed ☐?
23) If jointed, what is joint spacing? _____
24) Is barrier flush with wall ☐ Offset from face of wall ☐
25) If offset, by what distance? _____
26) Is wall panel coped/recessed into bottom of coping? No ☐ Yes ☐
27) If yes, by how much? _____
28) Is lateral and vertical barrier movement connected ☐ or disconnected/isolated ☐ from wall panel?
29) How is barrier slab connected to pavement? Integrally poured ☐ Doweled ☐

Please provide standard connection/construction details used in your state.

Design

MSE Walls

30) How much horizontal load do you consider to be transferred to the top of the MSE wall due to barrier impact? _____

Barrier

31) NCHRP Report 350 Test Level TL-3 ☐ TL-4 ☐ TL-5 ☐

32) Do you follow AASHTO LRFD Bridge Specification, Chapter 13 "Railings," for bridge railing design: No ☐ Yes ☐

If answer to previous question is "No":
33) What is magnitude of barrier design load? _____
34) What is the height of the applied design load? _____
Please cite source _____

Connections

Barrier to Wall

35) How is maximum bending moment in the barrier and barrier slab/footing determined?
_____

36) How is maximum shear in the barrier and barrier slab/footing determined? _____

For ACP pavement applications:

37) How do you calculate the required width and thickness of the barrier slab/footing? _____

For RCP pavement applications:

38) Do you calculate the bending moment in the pavement slab due to impact load on barrier? No ☐ Yes ☐

If yes, explain how _____

Please provide procedures for design of barriers on MSE walls (cite applicable manuals/references/guidelines (e.g., AASHTO LRFD or ASD Bridge Specification)).

Performance

39) Are you aware of any failures of MSE walls or barriers atop MSE walls due to vehicular impact? No ☐ Yes ☐

If yes, which components failed (check all that apply):
Barrier ☐ Coping ☐ Slab/Pavement ☐ Wall Panel ☐

Please provide any documentation (e.g., photographs, accident report, site details) that may exist for any known failures.

40) Are you aware of any other performance issues associated with MSE walls or barriers atop MSE walls? No ☐ Yes ☐

If yes, please describe _____

APPENDIX C: DETAILED DRAWING OF MSE WALL FOR BOGIE TEST

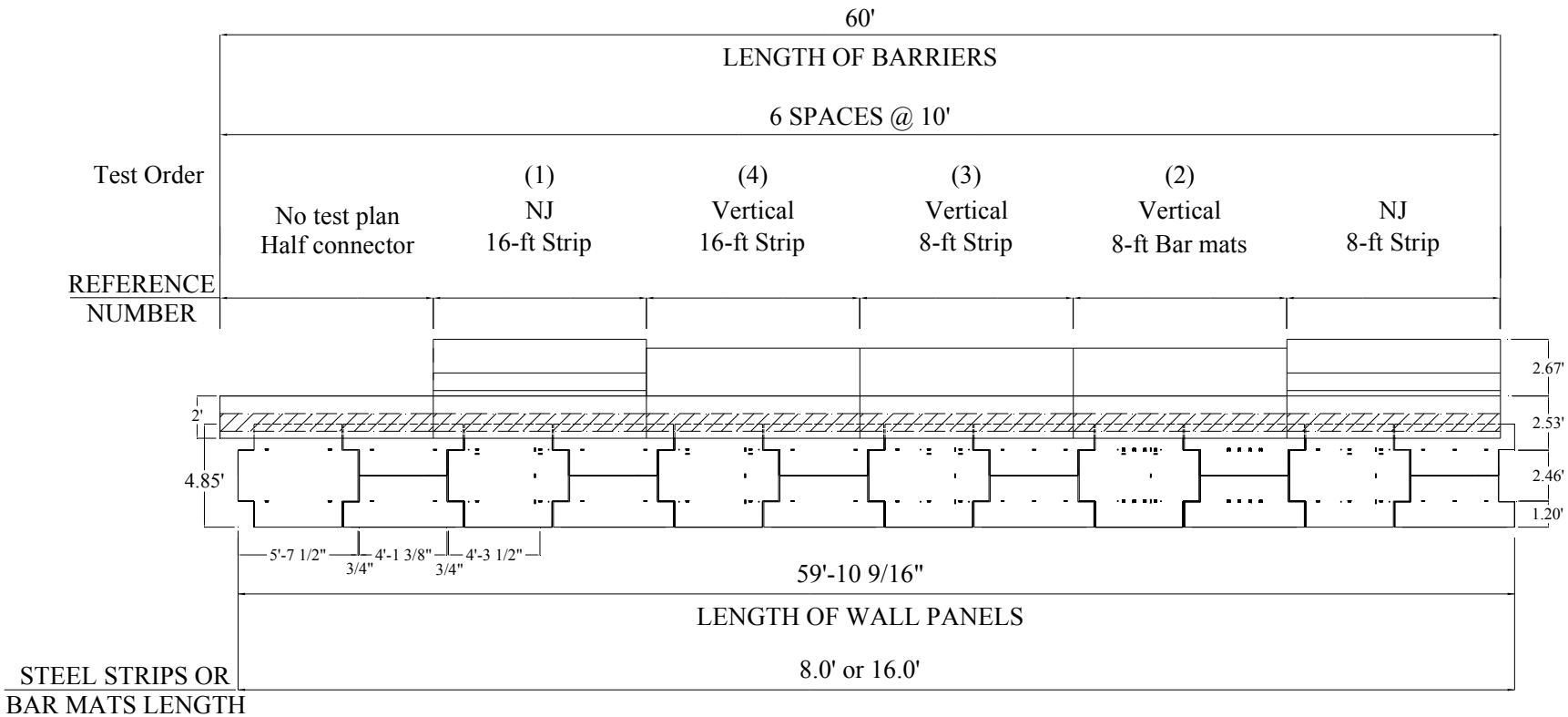

Figure C 1 Updated Overall Elevation of Installation for Bogie Reference Tests

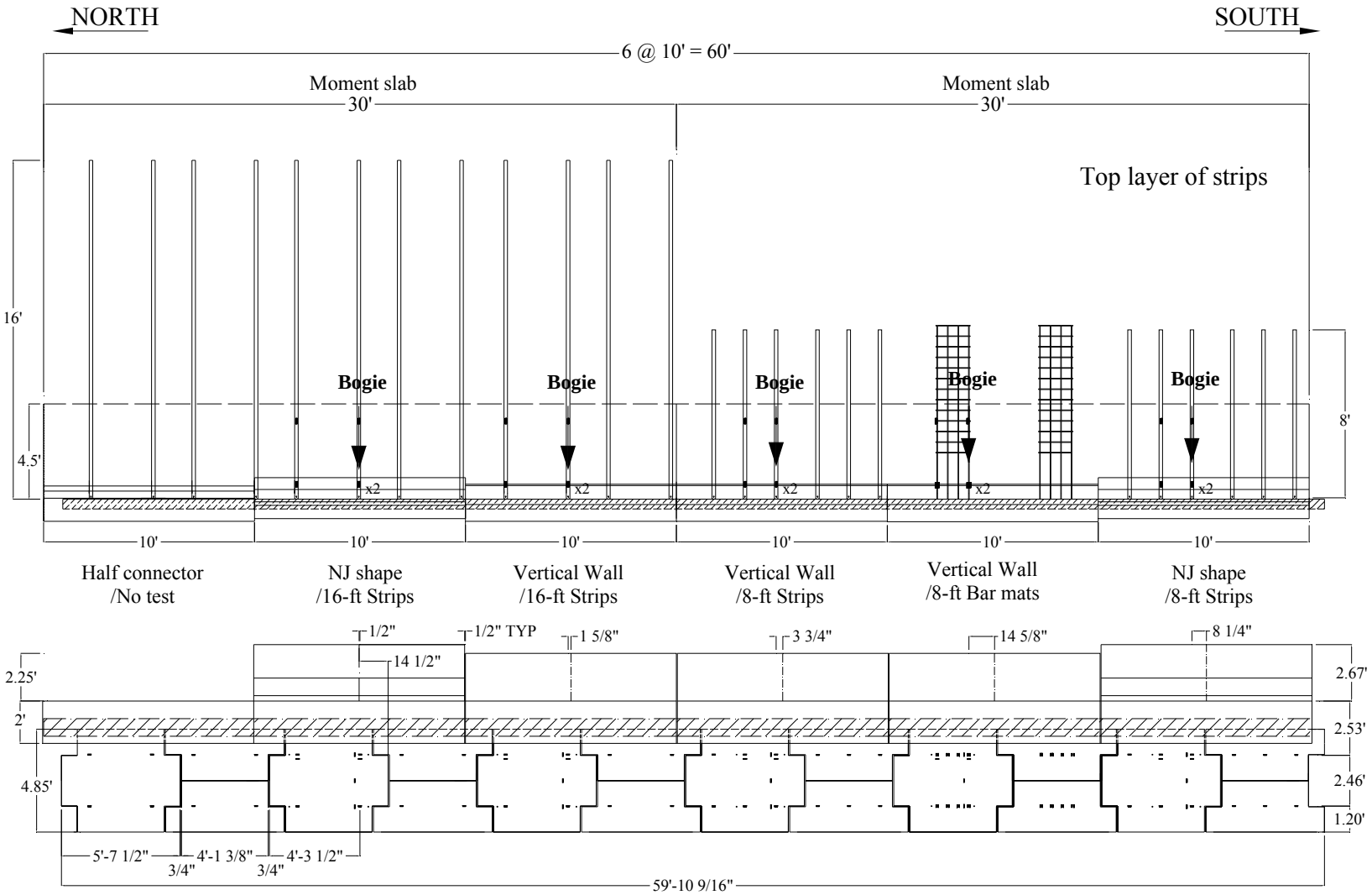

Figure C 2 First Reinforcement Layer

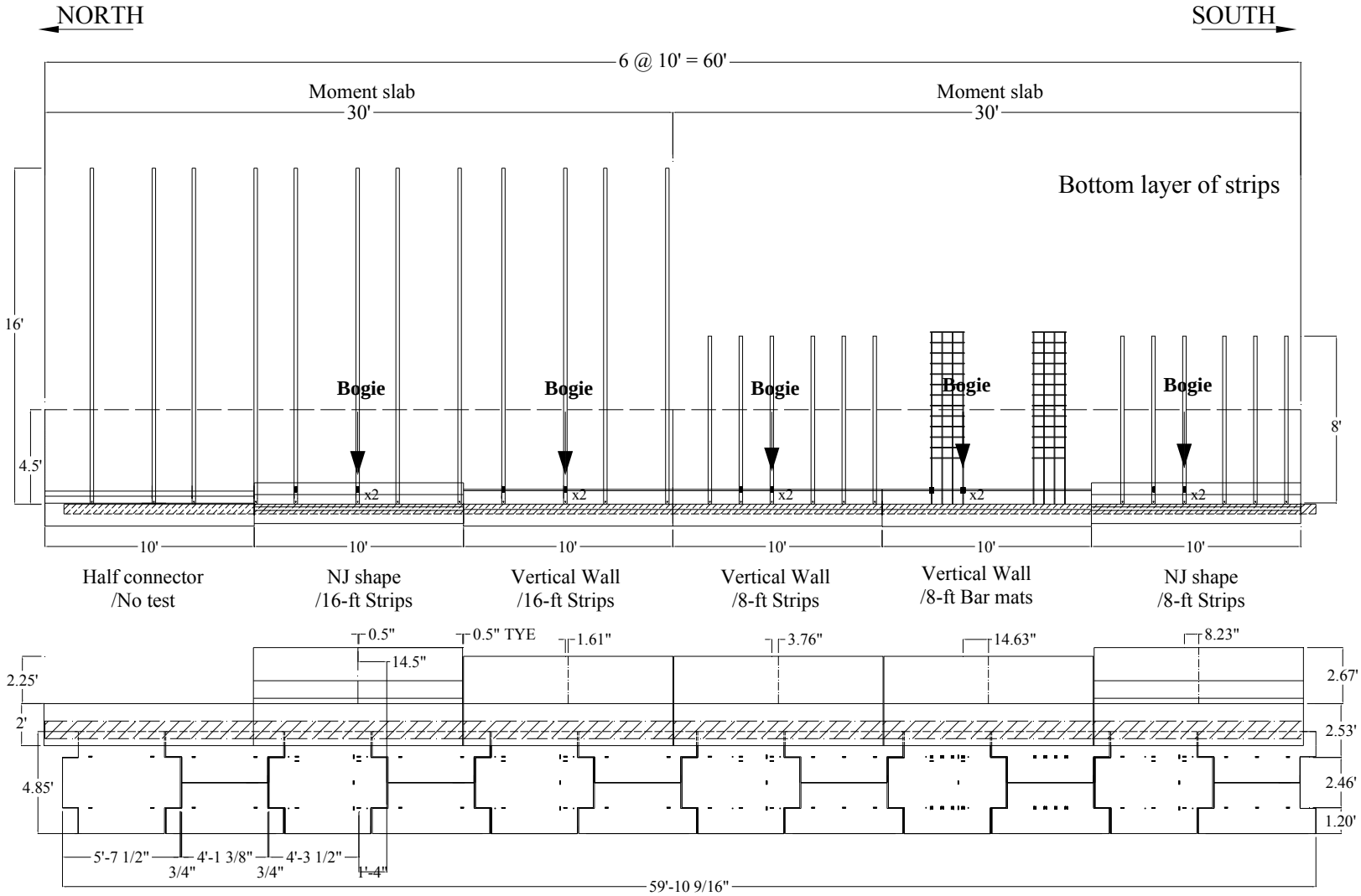

Figure C 3 Second Reinforcement Layer

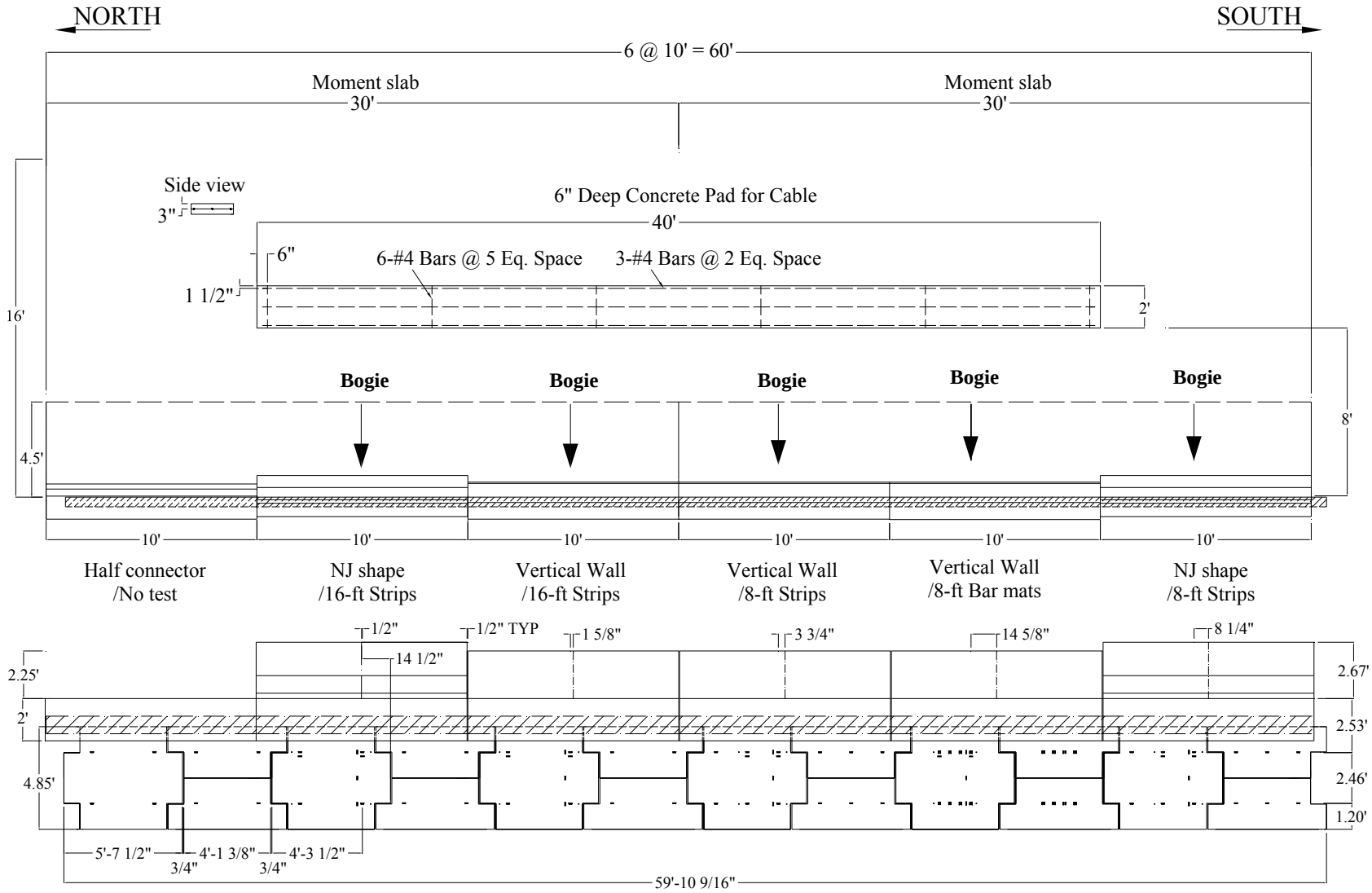

Figure C 4 Concrete Pad of Toe-System for Bogie Vehicle

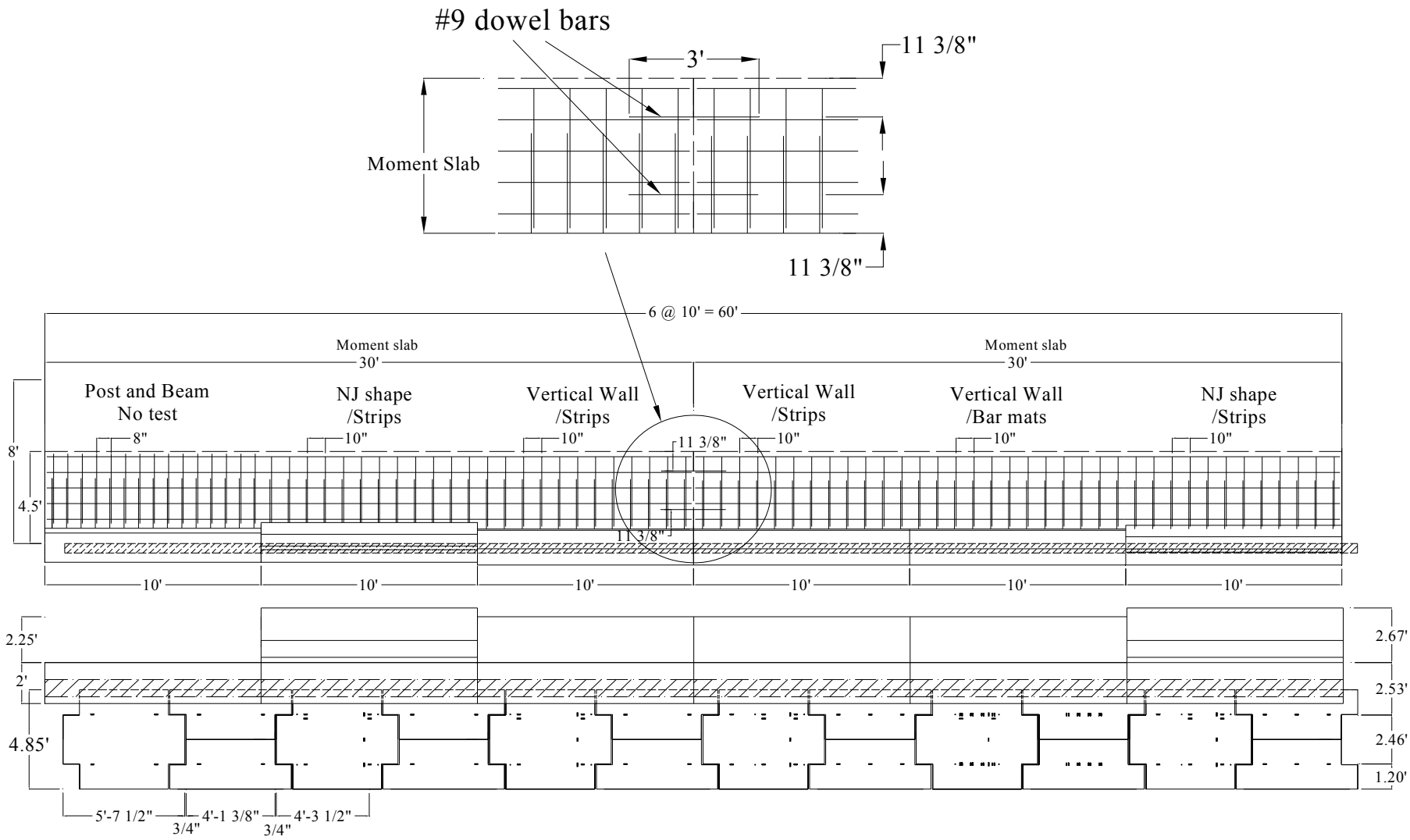

Figure C 5 Detailed Connection of Two 30-ft Moment Slab

APPENDIX D: BOGIE TEST MSE WALL CONSTRUCTION PROCEDURE

Figure D.1 Delivery of Backfill Material

Figure D.2 Excavation for MSE Wall

Figure D.3 Completed Excavation and Temporary Shoring

Figure D.4 Form and Pour Concrete Pedestal

Figure D.5 Place Initial Course of Wall Panels

Figure D.6 Spread and Compact Backfill to Bottom Layer of Reinforcement

Figure D.7 Install Bottom Layer of Reinforcement

Figure D.8 Install Bar Mat Reinforcement

Figure D.9 Place Second Course of Panels and Backfill to Top Layer of Reinforcement

Figure D.10 Completed MSE Wall Construction

Figure D.11 Form and Pour Concrete Leveling Pad atop Wall Panels

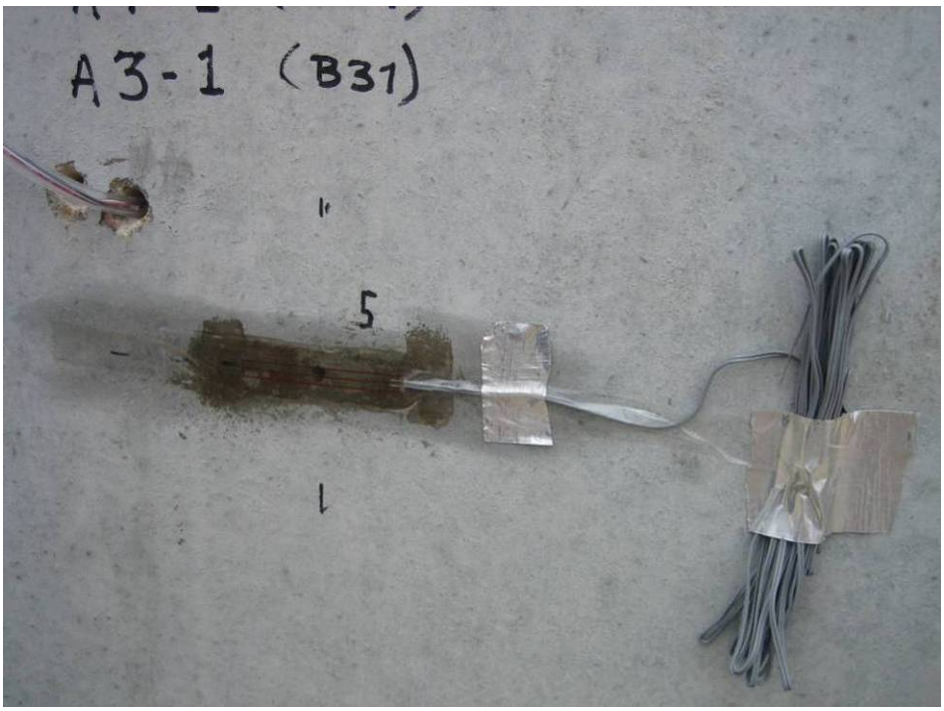

Figure D.12 Install Concrete Strain Gages on Exterior Face of Wall Panels

Figure D.13 Install Tape Switches on Inside Face of Wall Panels/Level Up Concrete

Figure D.14 Place Barriers atop Wall Panels

Figure D.15 Form Moment Slab and Install Reinforcing Bars

Figure D.16 Pour Concrete for Moment Slab

Figure D.17 Completed Moment Slab

Figure D.18 Installation of Accelerometers on the Moment Slabs

Figure D.19 Form of Pad for Tow-System for Bogie Vehicle

Figure D.19 Pour Concrete for Tow-System Pad

Figure D.20 Completed Concrete Pad for Tow-System

Figure D.21 Fill the Soil above the Moment Slab and Backfill

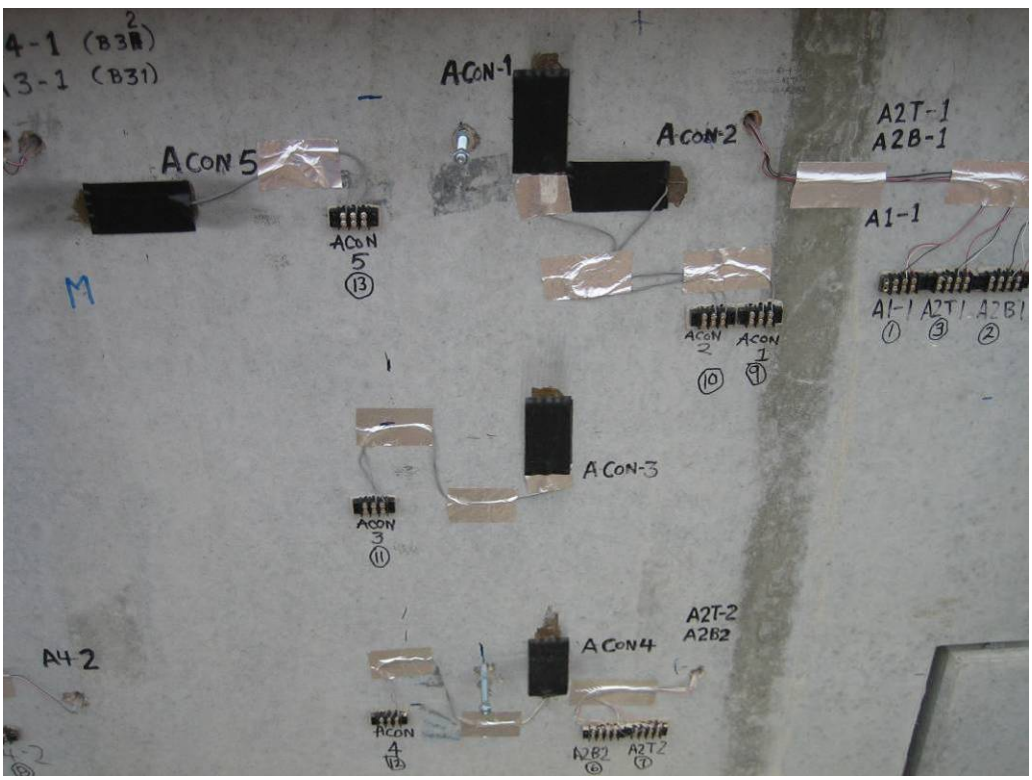

Figure D.22 Installation of Accelerometers on top of the Barrier and Connection Bolts for Displacement Bars

Figure D.23 Installation of String Line

(a) Measure the Distance before Test

(b) Installation of Tow-System for Bogie Vehicle

(c) Installation of Displacement Bars with Target for High-Speed Film

Figure D.24 Preparation on Test Day

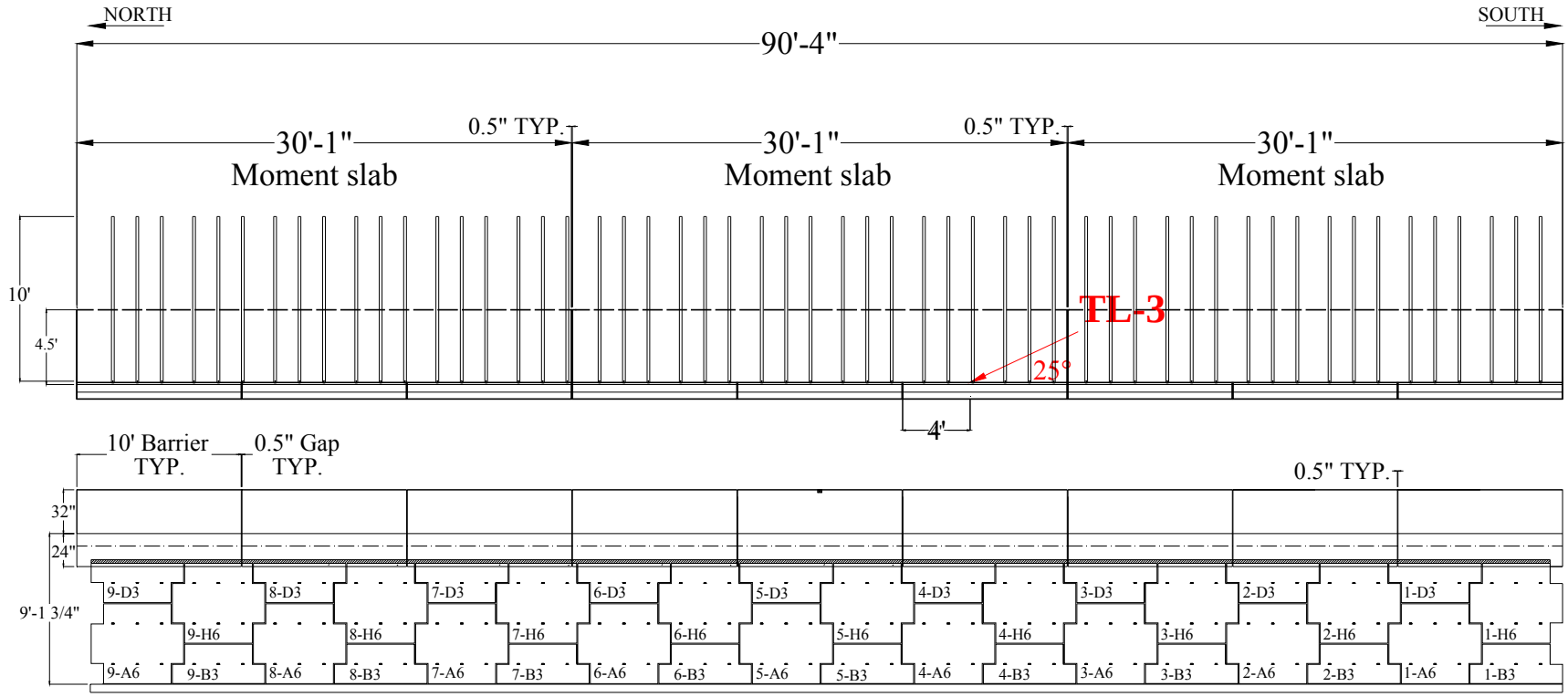

Figure E 1 Overall Layout for TL-3 Crash Test

1) Moment Slab

The precate parapet rail shall be braced until the moment slab can structurally support the rail. Workers shall not stand or work down in front of the wall until the rail has been structurally supported by the moment slab.

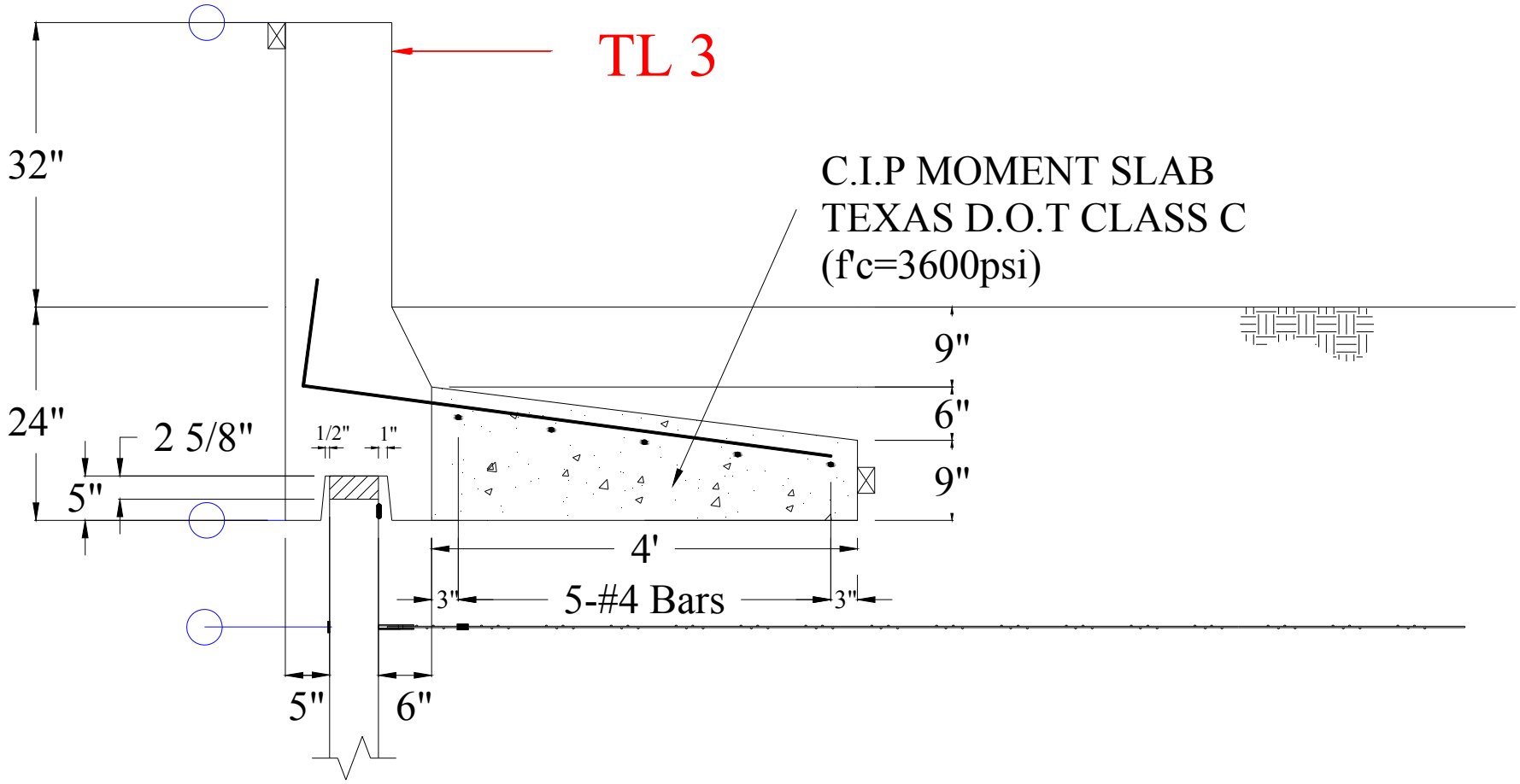

Figure E 2 C.I.P Moment Slab Detail

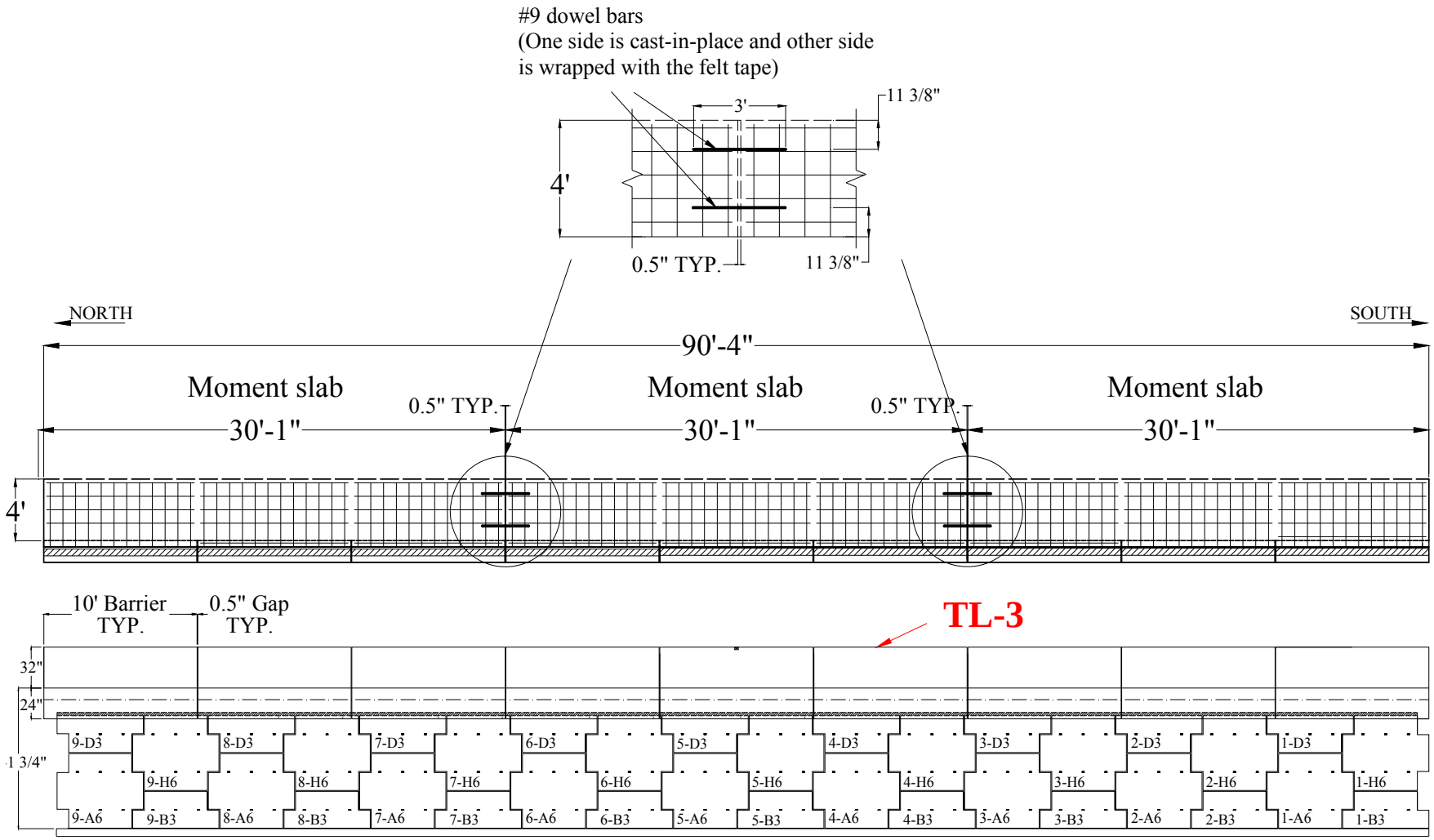

Figure E 3 Dowels in Moment Slab

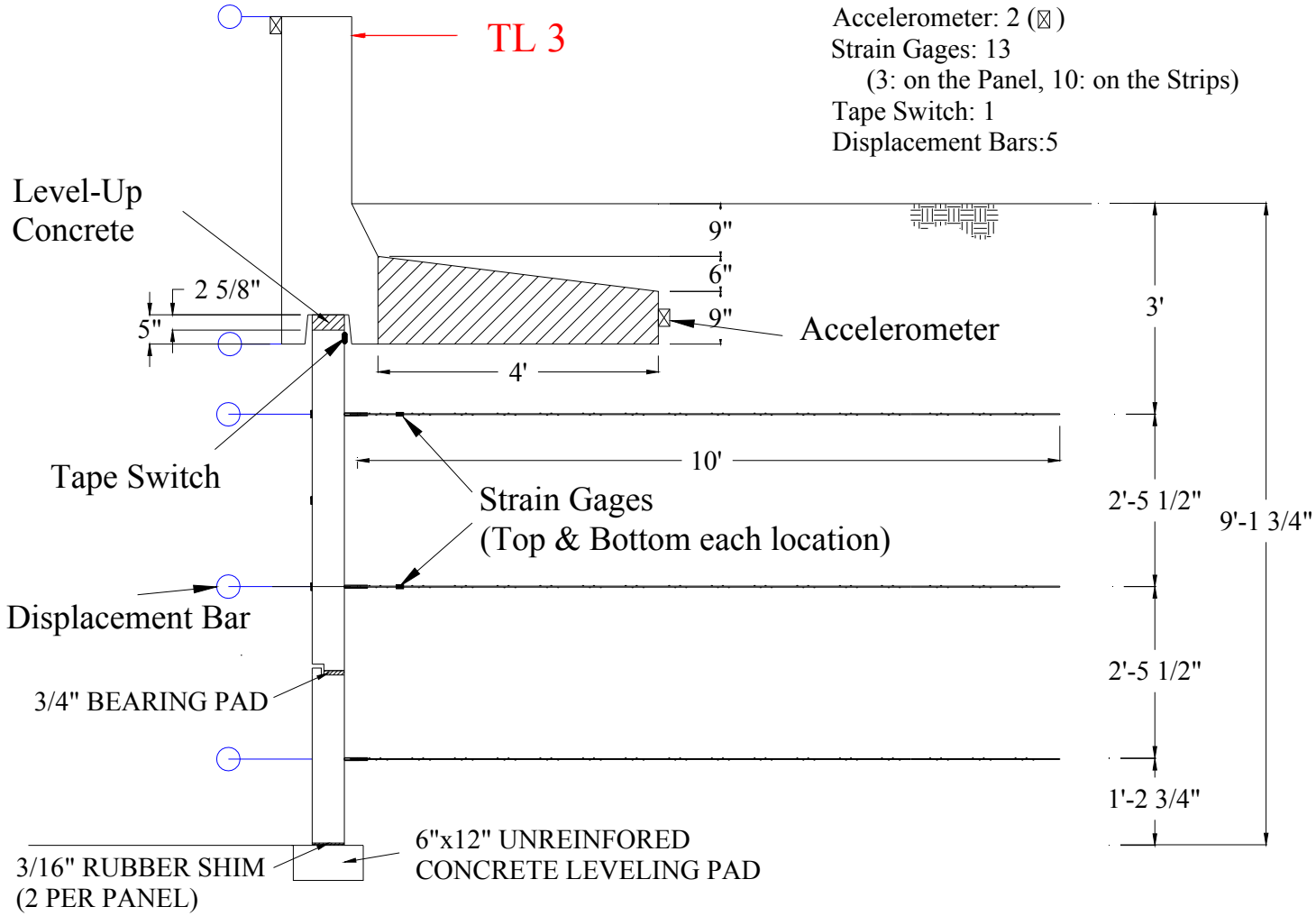

Figure E 4 Side View of TL-3 Crash Test with 32-in. Tall Vertical Wall Barrier Parapet

1) Steel Strain Gages on Reinforcement Strips

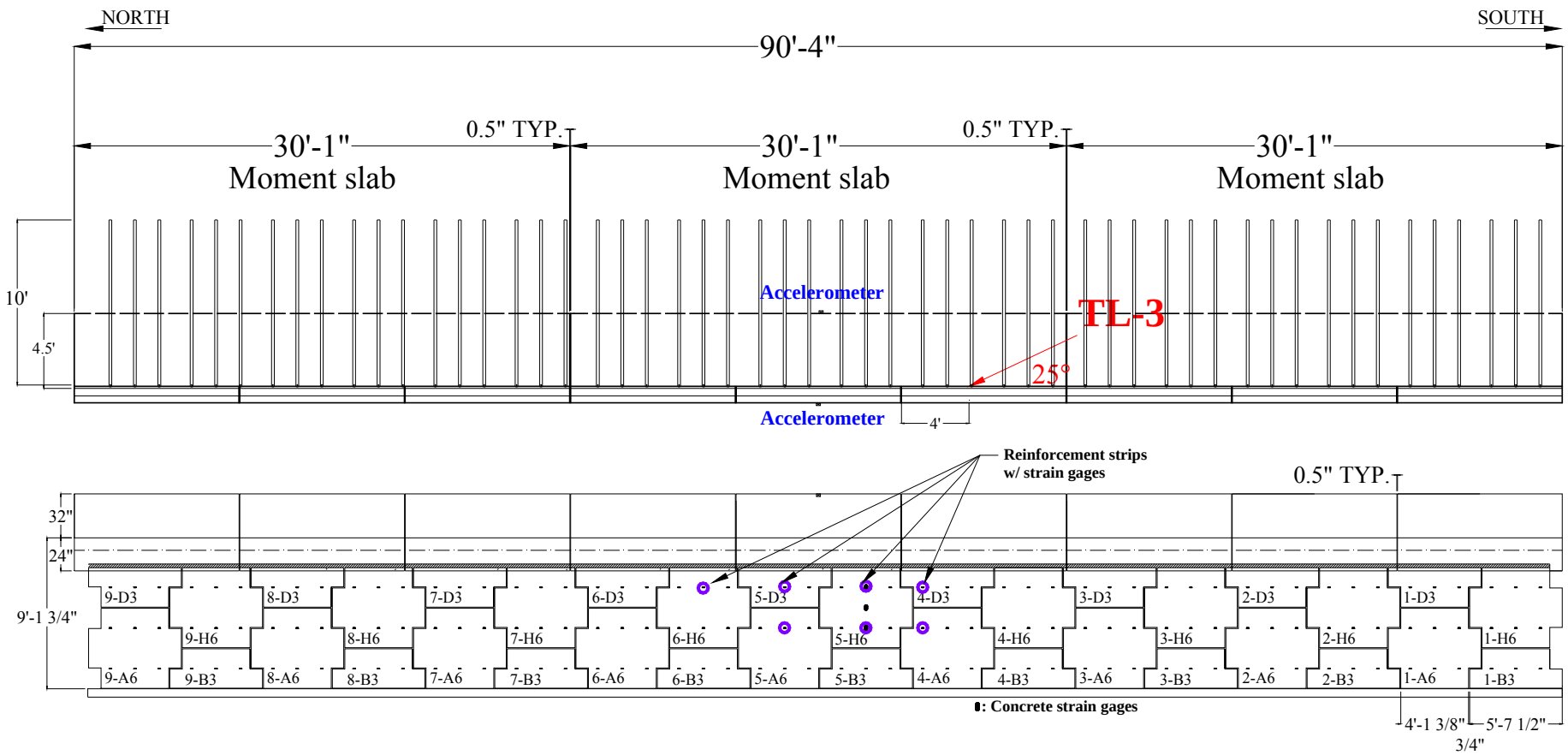

Figure E 5 Details of Strain Gages on Reinforcement Strips

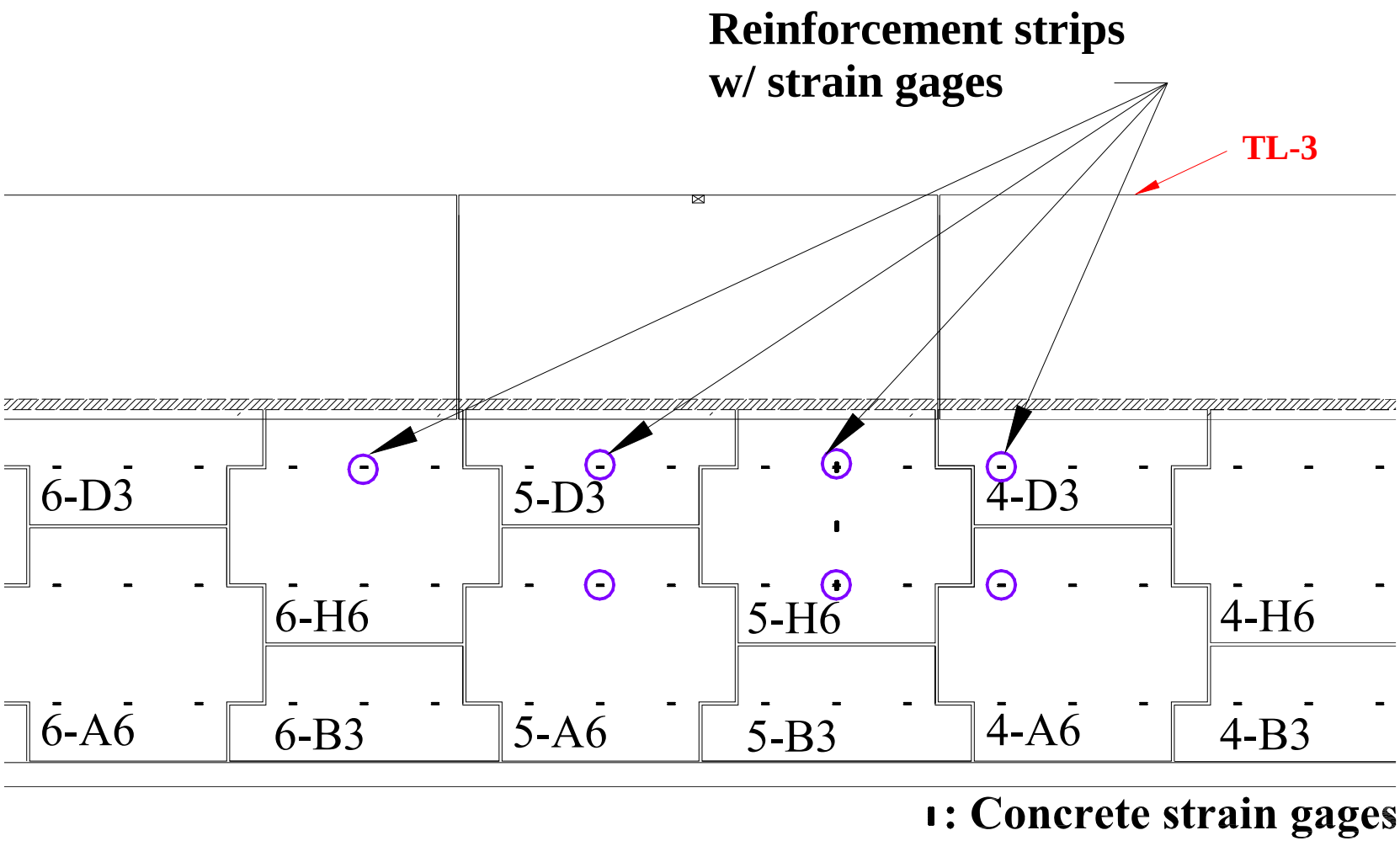

Figure E 6 Details of Strain Gages on Reinforcement Strips

Strain Gauge Instrumentation of Steel Reinforcement Strips (7 strips × 2 gages = 10 gages total)

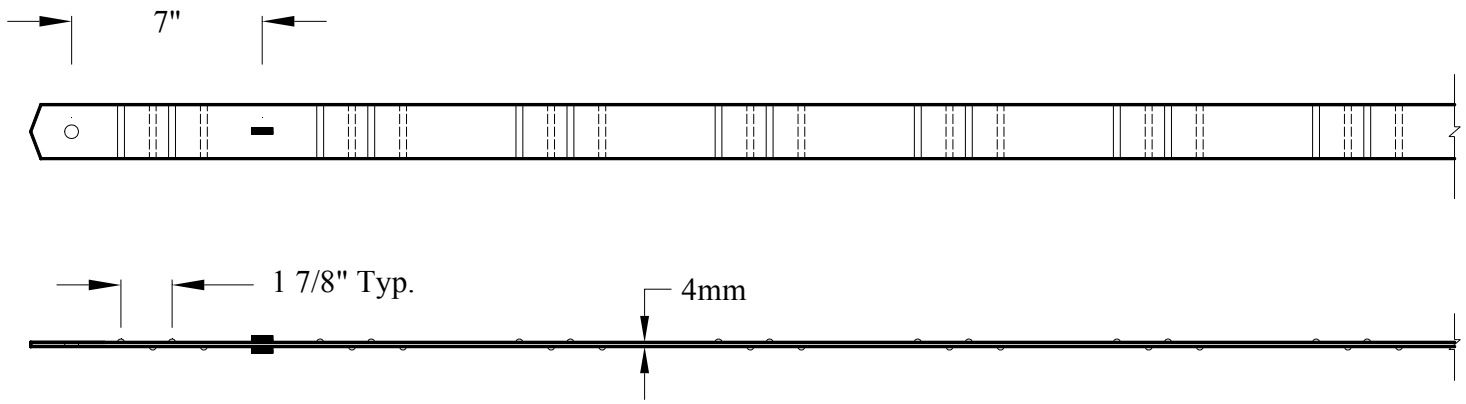

Figure E 7 Location of Steel Strain Gages on Steel Reinforcement Strips

Note: The strain gages installed on top and bottom of each strip.

2) Concrete Strain Gages on Wall Panel

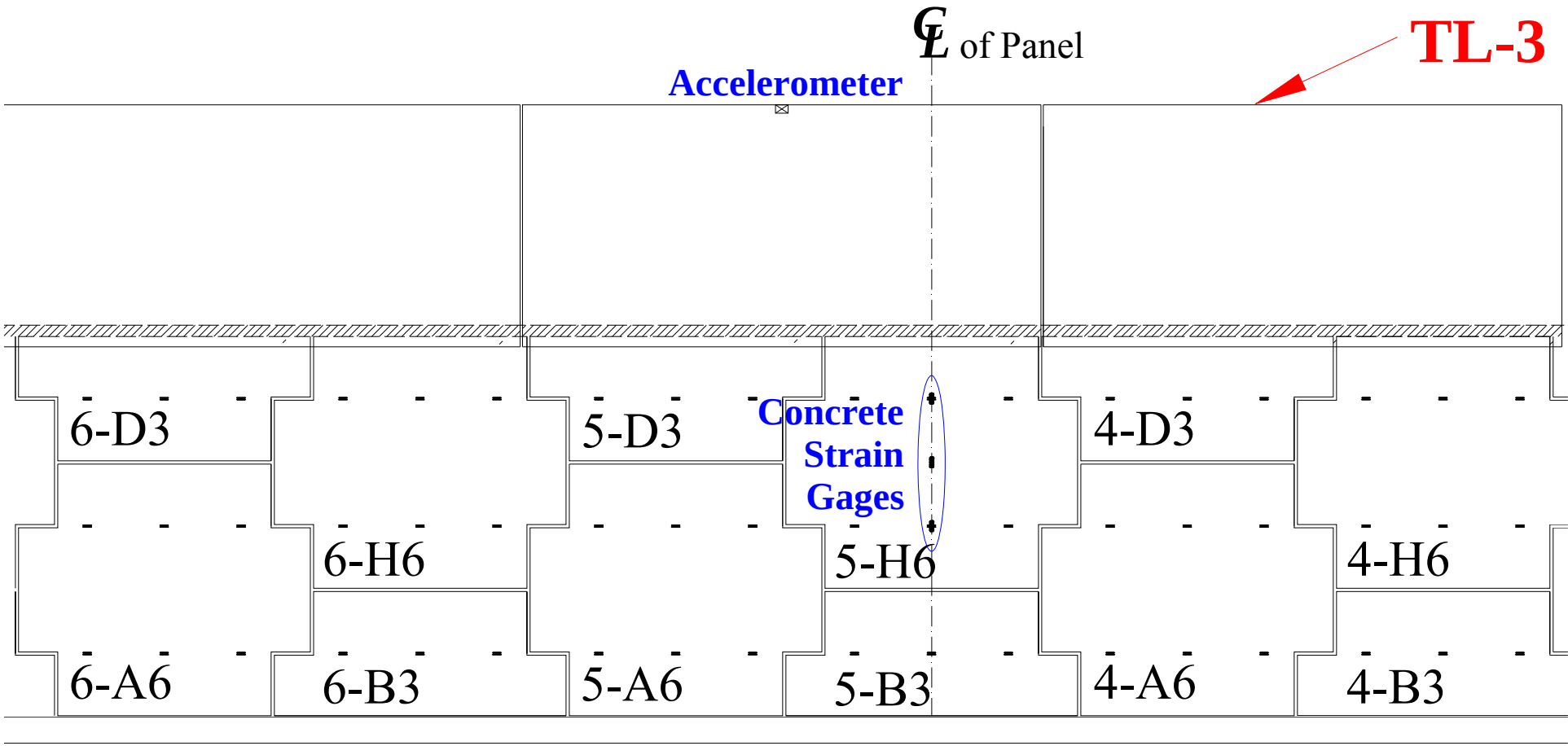

Figure E 8 Location of Concrete Strain Gages on Wall Panel

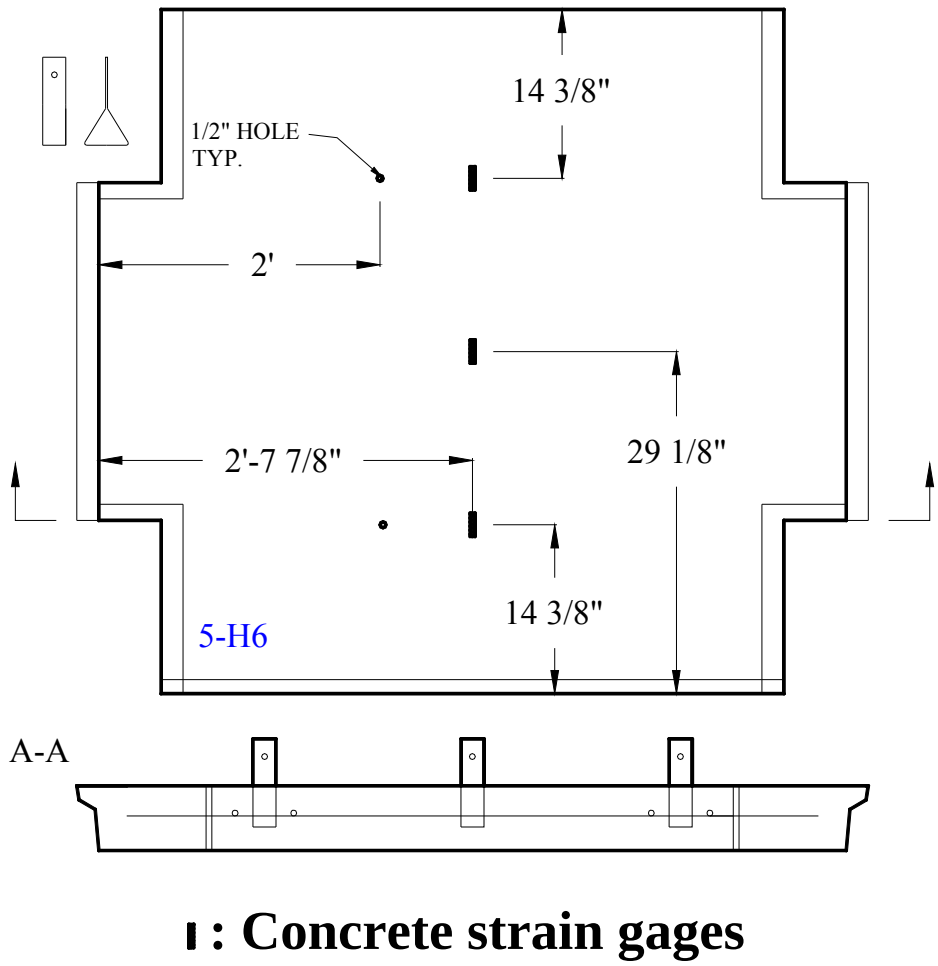

Figure E 9 Location of Concrete Strain Gages on Wall Panel

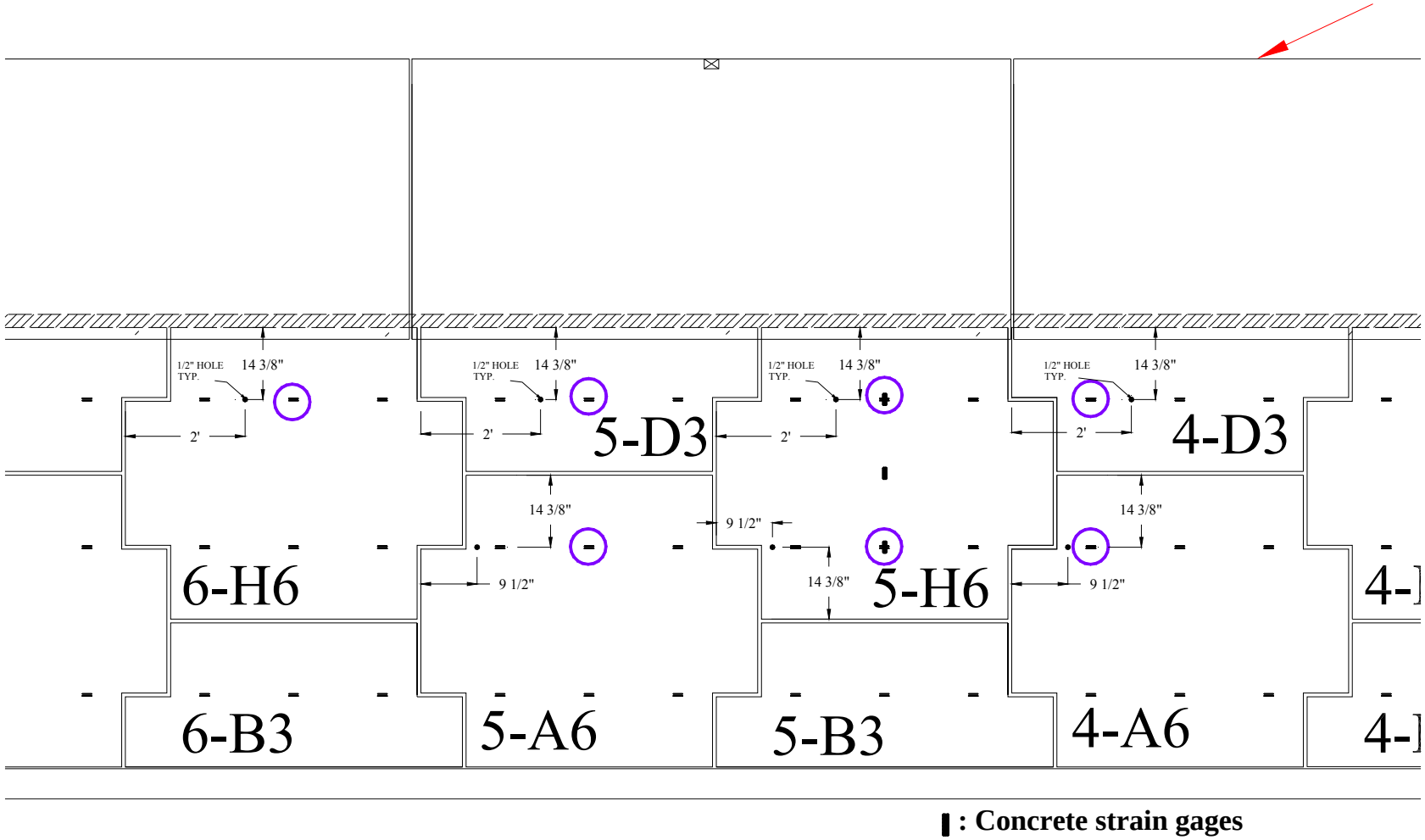

Figure E 10 Location of Hole for Stain Gage Wire

3) Tape Switch

: A tape switch is installed on the top edge at the centerline of the full panel (H6) shown in **Error! Reference source not found.**.

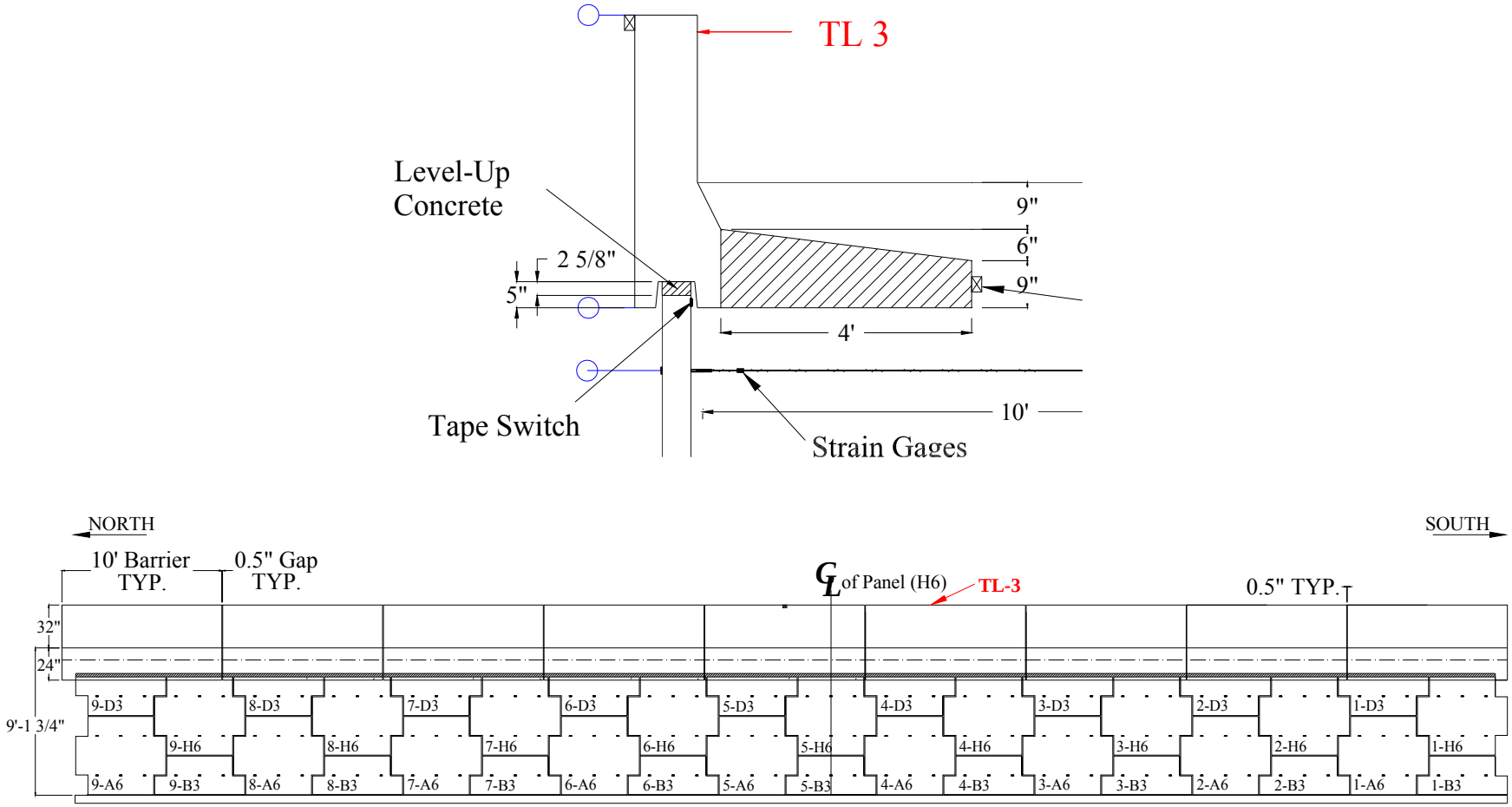

Figure E 11 Location of Tape Switch

4) Displacement Bar

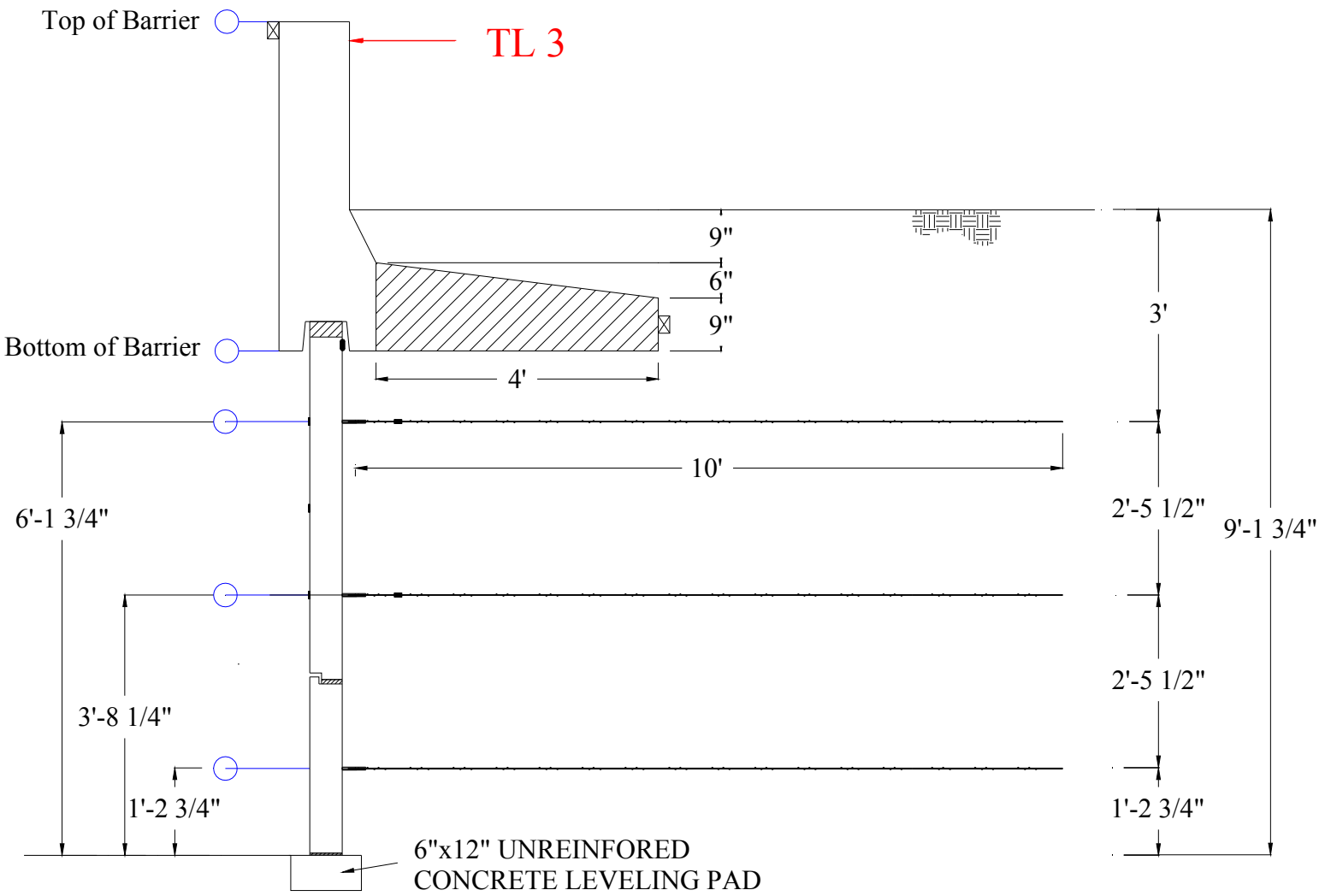

Figure E 12 Location of Displacement Bars on Wall Panels

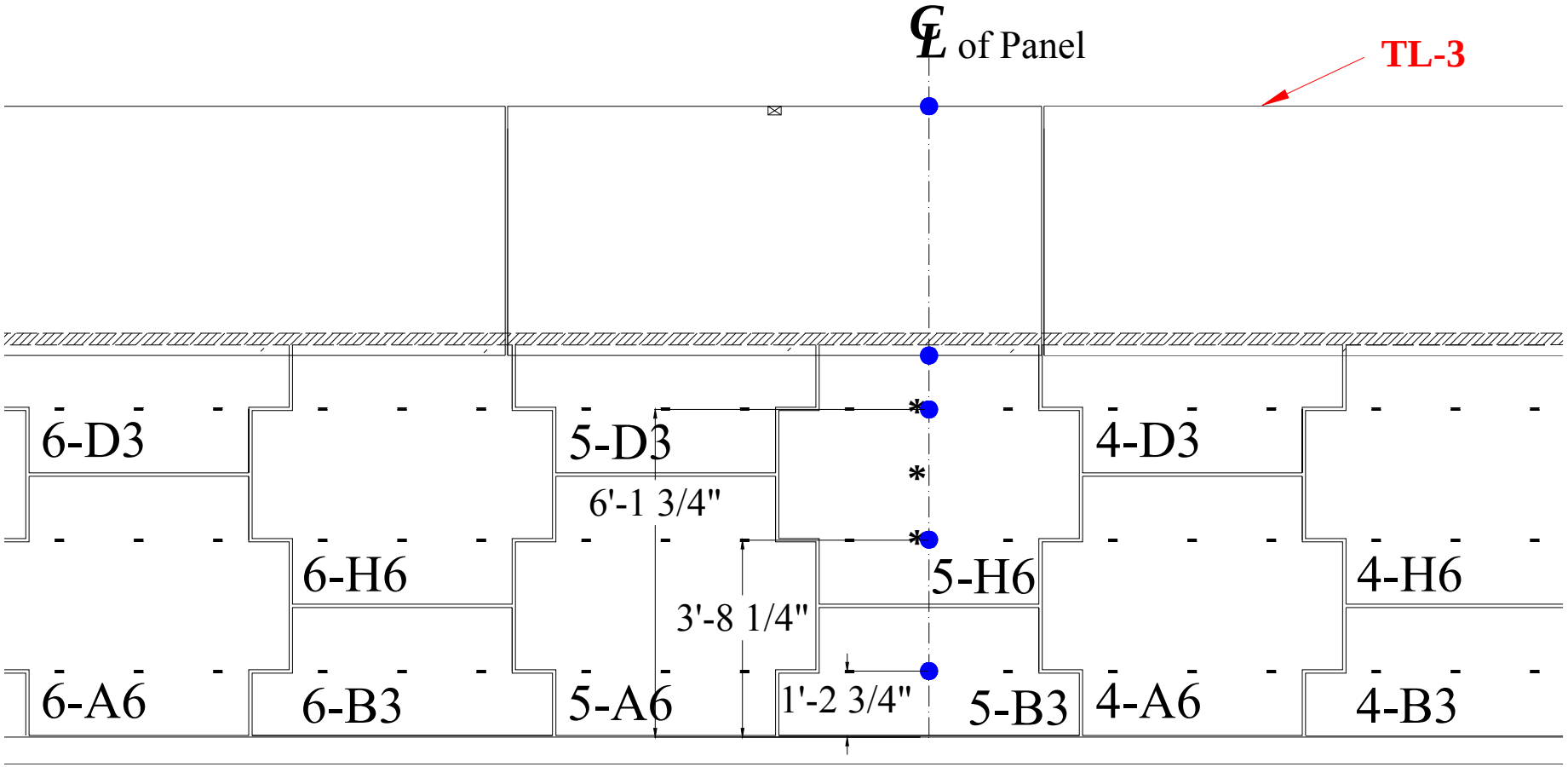

Figure E 13 Location of Displacement Bars on Wall Panels (Cont.)

5) Acceleromers on the Barrier and Moment slab

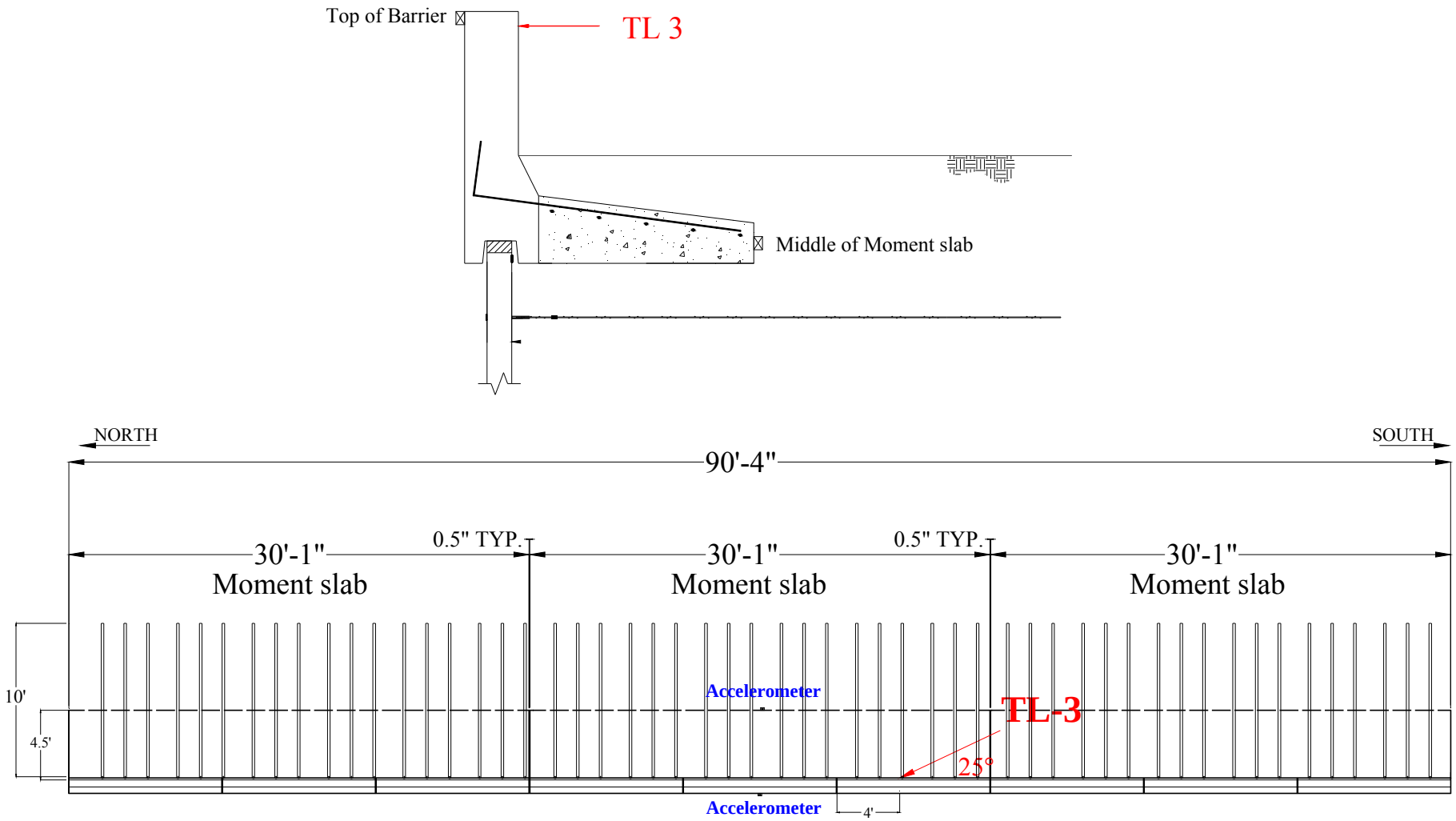

Figure E 14 Location of Accelerometers.

APPENDIX F: TL-3 TEST MSE WALL CONSTRUCTION PROCEDURE

Figure F.25 Delivery of Backfill Material

Figure F.26 Delivery of 10-ft Long Steel Strip

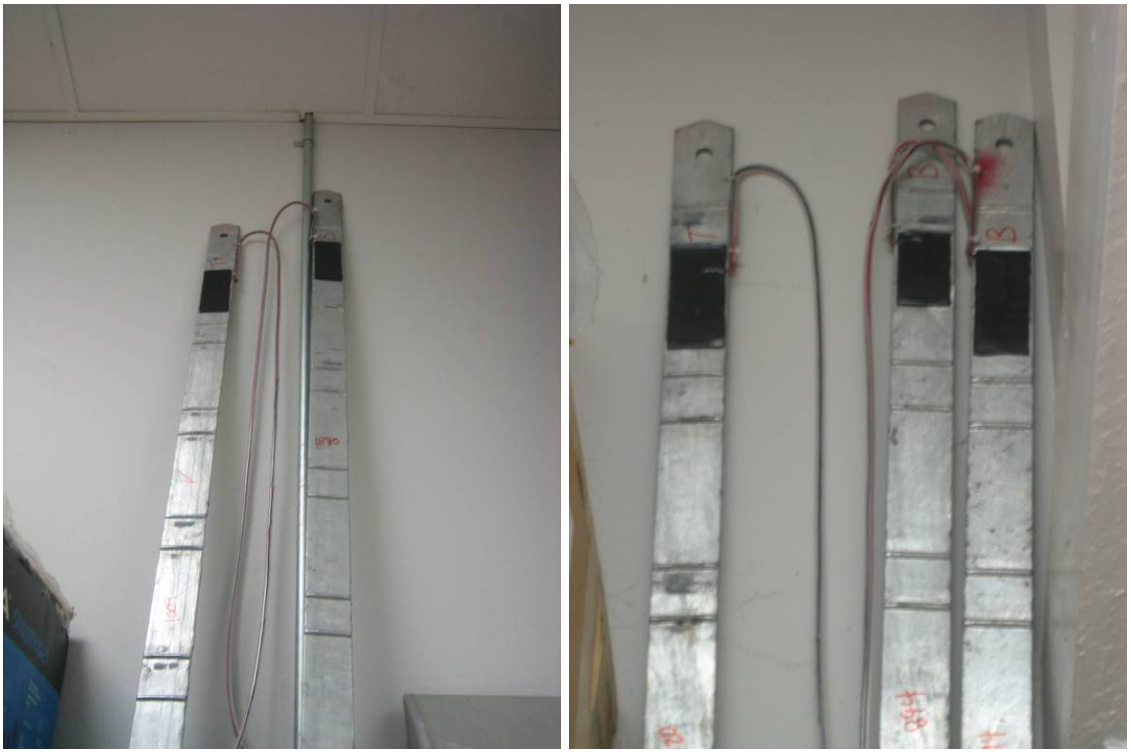

Figure F.27 Installation Strain Gages on the Strips

Figure F.28 Delivery of Wall Panels

Figure F.29 Excavation for MSE Wall

Figure F.30 Form and Pour Concrete Pedestal

Figure F.31 Place Initial Course of Wall Panels

Figure F.32 Spread and Compact Backfill to Bottom Layer of Reinforcement

Figure F.33 Install Bottom Layer of Reinforcement

Figure F.34 Fill Backfill Above the Strips

Figure F.35 Place Second Course of Panels

Figure F.36 Backfill to Top Layer of Reinforcement

Figure F.37 Fill Install Strips at Second Layer

Figure F.38 Place Half Panel at Second Layer

Figure F.39 Spread and Compact Backfill up to First Layer of Strip

Figure F.40 Install the Strips at Top Layer

Figure F.41 Read the Strain Gage on Strip at Top Layer to obtain Zeroed strain

Figure F.42 Spread and Compact Backfill up to Top of the Panel

Figure F.43 Form for the Leveling Pad

Figure F.44 Pour the Concrete for the Leveling Pad

Figure F.45 Completed MSE Wall Construction

Figure F.46 Test to Verify Full Bridge Strain Gages on the Strip

Figure F.47 Install Tape Switches on Inside Face of Wall Panels/Level Up Concrete

Figure F.48 Place Barriers atop Wall Panels

Figure F.49 Place Barriers atop Wall Panels

Figure F.50 Form Moment Slab and Install Reinforcing Bars

Figure F.51 Pour Concrete for Moment Slab

Figure F.52 Installation of Accelerometers on the Moment Slabs

Figure F.53 Installation of Accelerometers on top of the Barrier and Connection Bolts for Displacement Bars

Figure F.54 Fill the Soil above the Moment Slab and Backfill

APPENDIX G: TL-3 TEST VEHICLE PROPERTIES AND INFORMATION

Date: 2008-09-25 Test No.: 475350-1 VIN No.: 1D7HA18N74S569024

Year: 2004 Make: Dodge Model: Ram 1500 Quad-Cab

Tire Size: 245/70R17 Tire Inflation Pressure: 35 psi

Tread Type: Highway Odometer: 162279

Note any damage to the vehicle prior to test: _____

● Denotes accelerometer location.

NOTES: _____

Engine Type: V-8
Engine CID: 4.7 liter

Transmission Type:
x Auto or ____ Manual
____ FWD x RWD ____ 4WD

Optional Equipment:

Dummy Data:
Type: No dummy
Mass:
Seat Position:

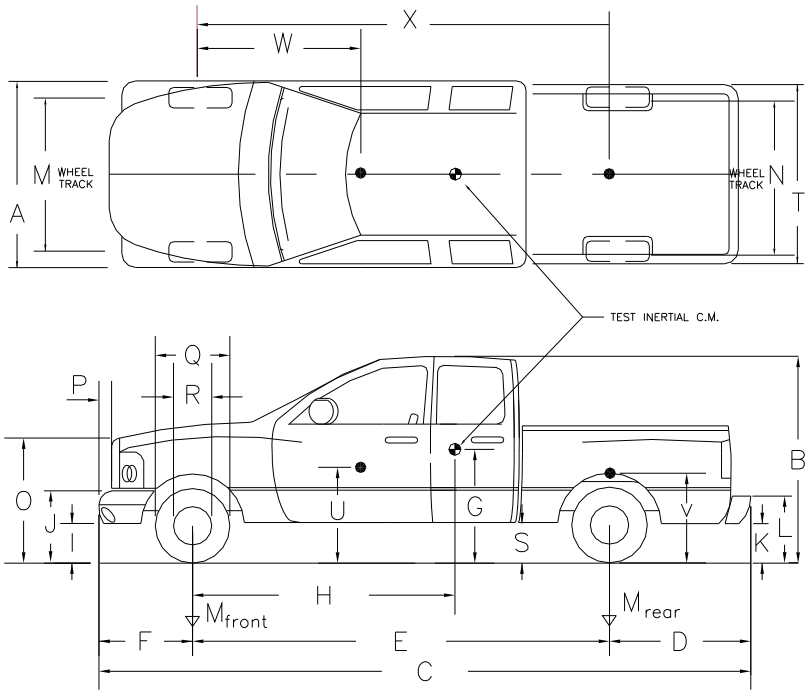

Geometry: inches

A	77.0	F	37.0	K	18.0	P	3.5	U	27.5
B	74.0	G	28.2	L	27.5	Q	30.0	V	33.0
C	224.5	H	62.4	M	68.2	R	18.2	W	59.5
D	47.0	I	13.8	N	67.2	S	15.4	X	140.5
E	140.5	J	26.0	O	44.5	T	75.5		

Wheel Center Ht Front _____ Wheel Well Clearance (FR) _____ Frame Ht (FR) _____

Wheel Center Ht Rear _____ Wheel Well Clearance (RR) _____ Frame Ht (RR) _____

GVWR Ratings:		**Mass:** lb	Curb	Test Inertial	Gross Static
Front	3650	M_{front}	2730	2751	
Back	3900	M_{rear}	2064	2200	
Total	6650	M_{Total}	4794	4951	

Mass Distribution:
lb LF: 1357 RF: 1394 LR: 1096 RR: 1104

Figure G1. Vehicle properties for test 475350-1.

Table G1. Exterior crush measurements for test 475350-1.

Date: 2008-09-25 Test No.: 475350-1 VIN No.: 1D7HA18N74S569024

Year: 2004 Make: Dodge Model: Ram 1500 Quad-Cab

VEHICLE CRUSH MEASUREMENT SHEET[1]

Complete When Applicable	
End Damage	Side Damage
Undeformed end width _____	Bowing: B1 _____ X1 _____
Corner shift: A1 _____	B2 _____ X2 _____
A2 _____	
End shift at frame (CDC)	Bowing constant
(check one)	$\frac{X1 + X2}{2}$ = _____
< 4 inches _____	
≥ 4 inches _____	

Note: Measure C_1 to C_6 from Driver to Passenger side in Front or Rear impacts – Rear to Front in Side Impacts.

Specific Impact Number	Plane* of C-Measurements	Direct Damage		Field L**	C_1	C_2	C_3	C_4	C_5	C_6	±D
		Width** (CDC)	Max*** Crush								
1	Front plane at bumper ht	19.7	13.8	23.6	13.8	9.1	6.3	3.1	0.8	0	-14.2
2	Side plane at bumper ht	19.7	15.8	63.0	2.8	---	---	---	14.6	15.8	+77.2
	MEASUREMENTS IN										
	INCHES										

[1]Table taken from National Accident Sampling System (NASS).

*Identify the plane at which the C-measurements are taken (e.g., at bumper, above bumper, at sill, above sill, at beltline, etc.) or label adjustments (e.g., free space).

Free space value is defined as the distance between the baseline and the original body contour taken at the individual C locations. This may include the following: bumper lead, bumper taper, side protrusion, side taper, etc. Record the value for each C-measurement and maximum crush.

**Measure and document on the vehicle diagram the beginning or end of the direct damage width and field L (e.g., side damage with respect to undamaged axle).

***Measure and document on the vehicle diagram the location of the maximum crush.

Note: Use as many lines/columns as necessary to describe each damage profile.

Table G2. Occupant compartment measurements for test 475350-1.

Date: 2008-09-25 Test No.: 475350-1 VIN No.: 1D7HA18N74S569024

Year: 2004 Make: Dodge Model: Ram 1500 Quad-Cab

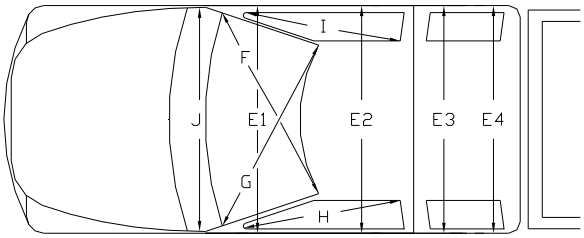

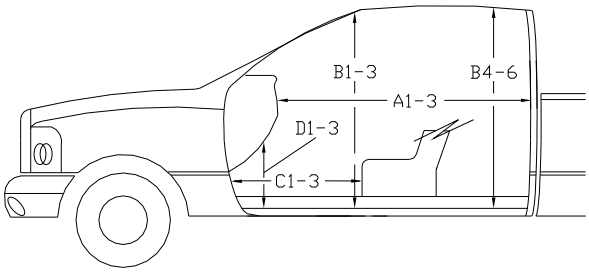

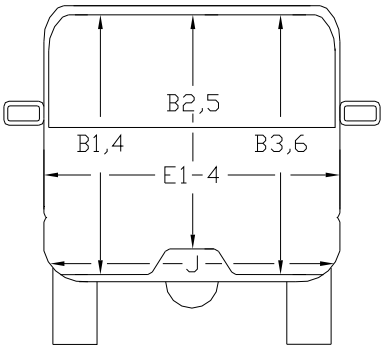

*Lateral area across the cab from driver's side kickpanel to passenger's side kickpanel.

OCCUPANT COMPARTMENT DEFORMATION MEASUREMENT

	Before (mm)	After (mm)
A1	64.6	64.6
A2	64.9	64.9
A3	65.4	65.4
B1	44.7	44.7
B2	39.2	39.2
B3	45.3	45.3
B4	48.8	48.8
B5	45.2	45.2
B6	48.8	48.8
C1	29.5	29.5
C2	-----	-----
C3	27.4	27.4
D1	12.6	12.6
D2	2.4	2.4
D3	11.6	11.6
E1	63.3	61.2
E2	64.3	63.8
E3	64.2	63.5
E4	64.2	63.0
F	59.6	------
G	59.6	-----
H	39.6	-----
I	39.6	-----
J*	22.9	21.6

APPENDIX H: TL-3 TEST SEQUENTIAL PHOTOGRAPHS

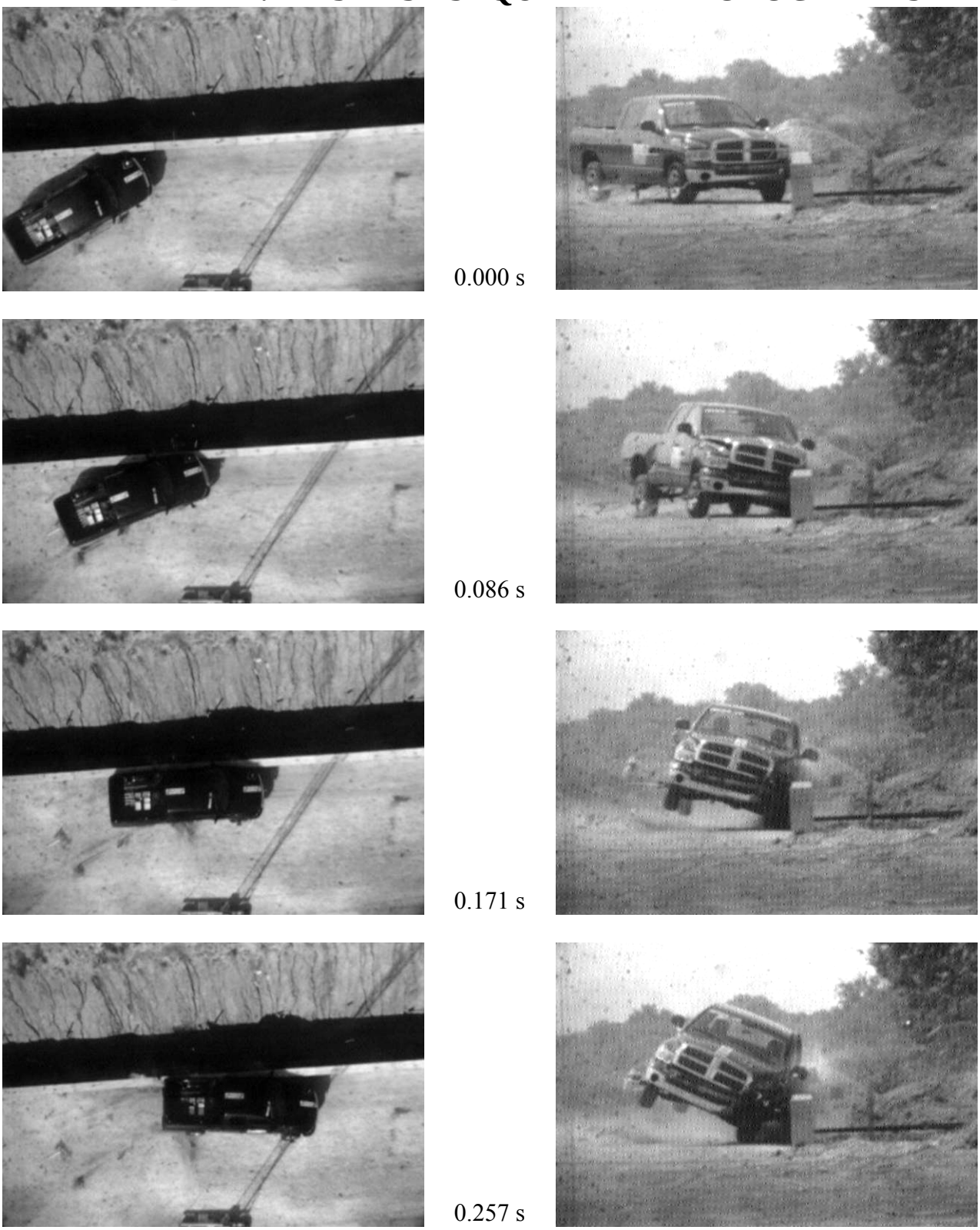

Figure H1. Sequential photographs for test 475350-1
(overhead and frontal views).

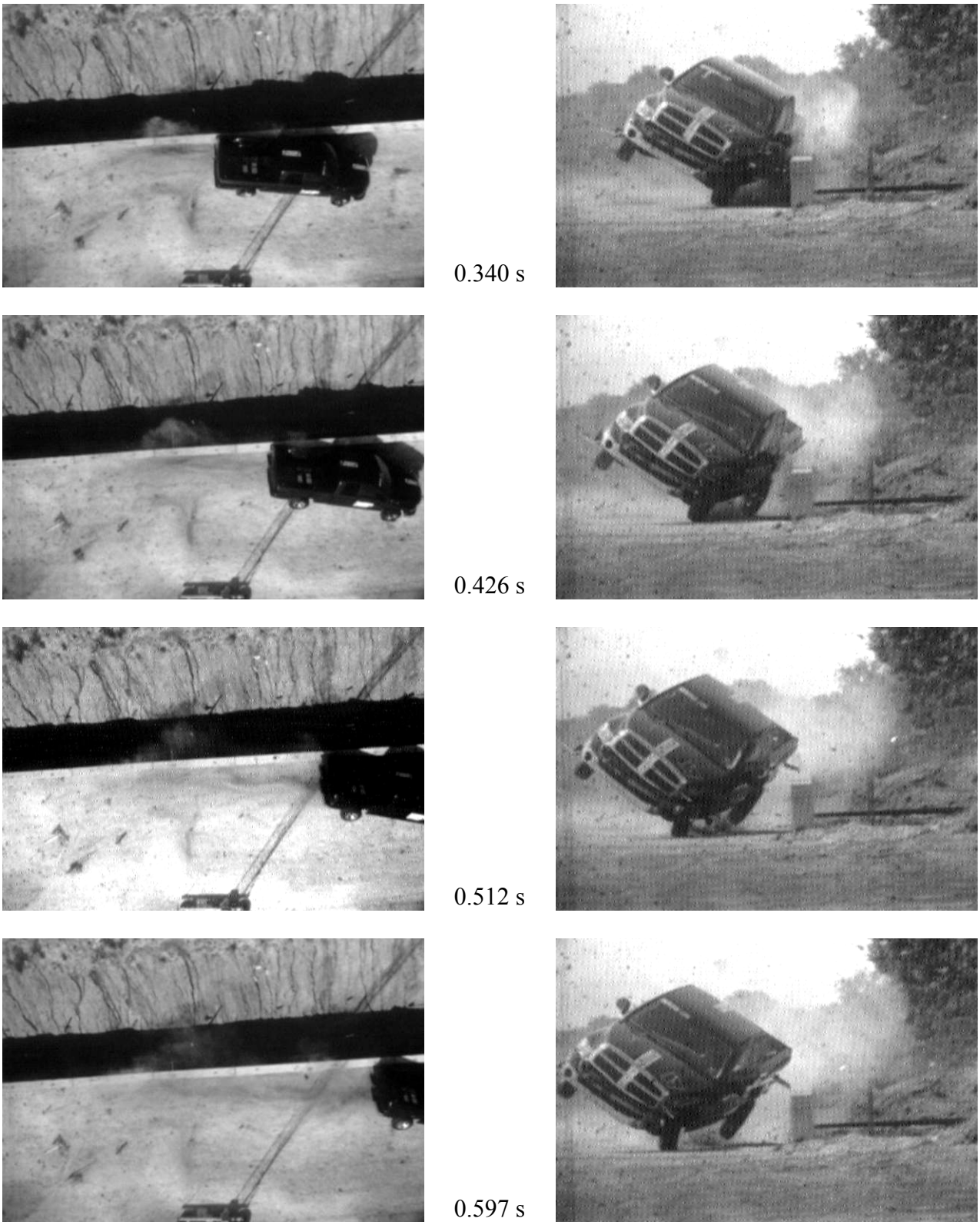

Figure H1. Sequential photographs for test 475350-1
(overhead and frontal views) (continued).