APPENDIX E SUMMARY SHEETS OF HYBRID CONNECTIONS

APPENDIX E SUMMARY SHEETS OF HYBRID CONNECTIONS

Location:	Column to footing and cap beam	**Type:**	Hybrid: Precast segmental hollow box column to CIP footing and precast cap beam ED
Title:	Connection H-1 Hollow Box Segmental Column	**TRL:**	Maximum TRL: 6 TRL Gaps: Levels 3 and 5
Source:	National Taiwan University		

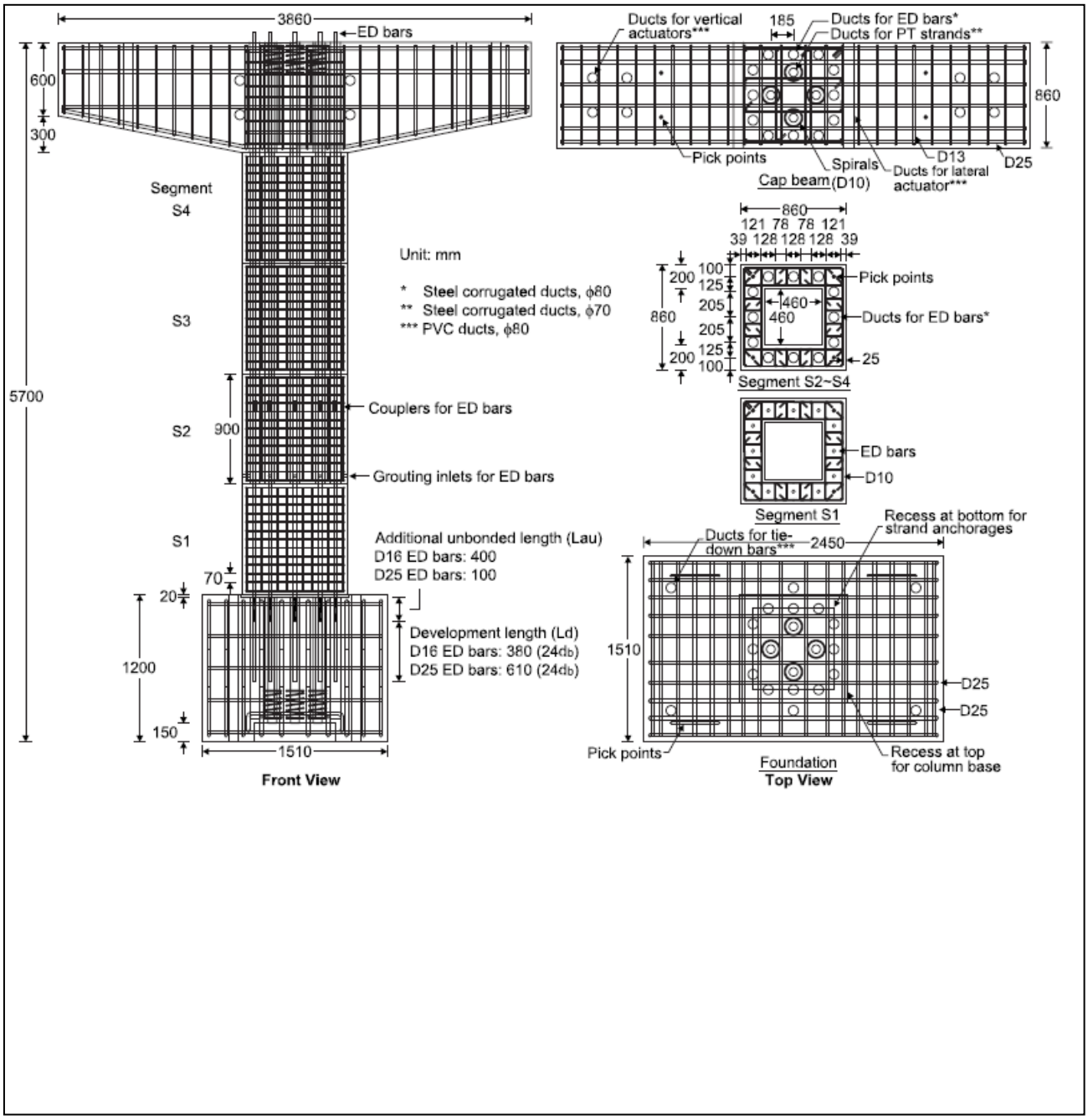

BACKGROUND

Title: **Connection H-1** (Hollow Box Segmental Column)

History / Description:

- A precast column and cap beam system contains bonded mild steel ED bars and unbonded PT, with the goal of ensuring re-centering after an earthquake. The bottom segment of the column is cast in place to ensure plumb and level. Higher segments are precast, with ducts for grouted ED bars, which are coupled as needed. Unbonded PT runs up the interior void and is anchored in the cap beam. Hollow columns make the details best suited for very large columns.
- Seismic performance of four different ratios of ED and PT steel were tested.

References:

- Wang et al. (2008)
- Ou et al. (2010)

Contact Information:

- Yu-Chen Ou – yuchenou@mail.ntust.edu.tw

EVALUATION

Constructability:
Risk Value: -1

- As shown, the tendon must be installed first and segments threaded over it.
- Correct alignment of ED bar ducts in segments is critical.
- Segments probably need to be match-cast or precision-cast vertically. Need interior form.

Seismic Performance:
Value: +1

- System designed to re-center and minimize residual drift.
- Ultimate drifts of 5% were achieved with residual drift between 0.4% and 0.7%.
- Damage and rotation concentrated at the joint between column and footing. Tendon anchor must be inset into cap beam and footing – reduces area available to resist joint shear.

Inspectability:
Value: -1

- Bottom PT anchor hard to inspect during construction, more difficult in service.

Durability:
Value: -1

- Corrosion protection system for PT cables unclear. They are in the void and may be vulnerable.

Time Saving Potential:
Value: 0

- Precasting the cap beam saves time, PT system adds time.

TRL Comments:

-

Additional Comments:

-

Location:	Column to column	**Type:**	Hybrid: Precast segmental hollow box with inner steel shell and fuse bars between column segments ED
Title:	Connection H-2 Hollow box with fuse bars	**TRL:**	Maximum TRL: 6 TRL Gaps: Levels 3 and 5
Source:	MCEER		

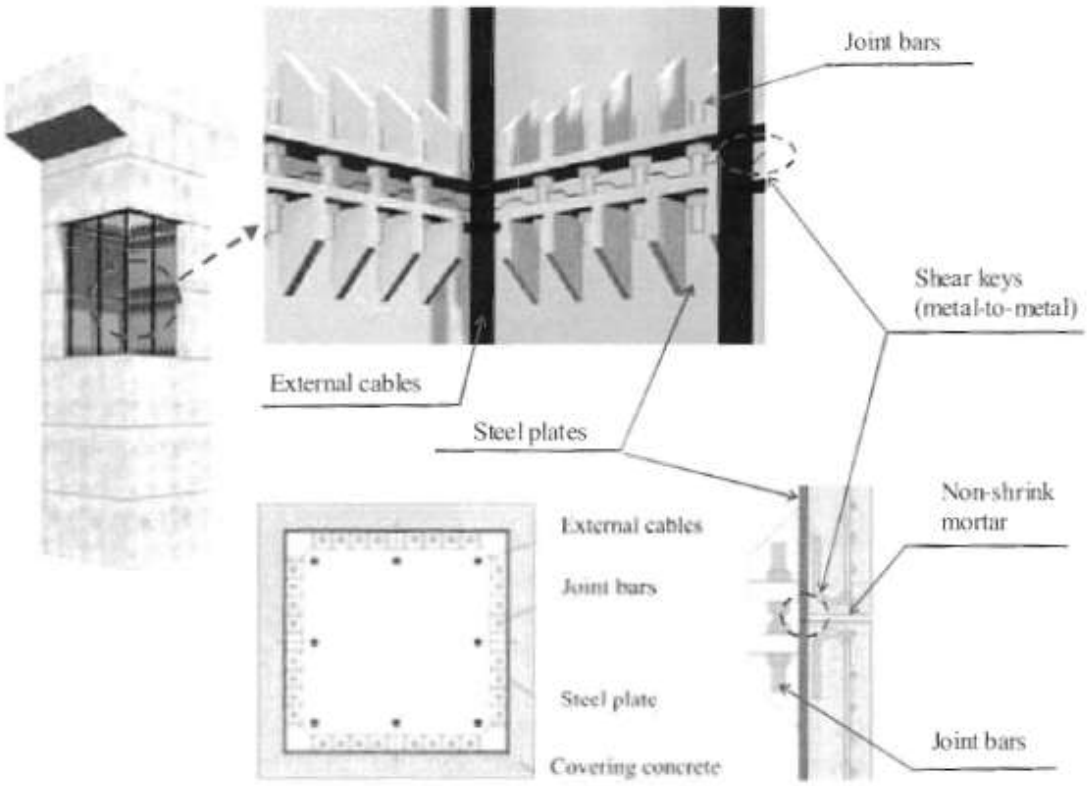

BACKGROUND

Title: **Connection H-2** (Hollow box with fuse bars)

History / Description:

- The precast column is constructed in segments, each of which has a composite steel inner shell. Segments are joined with replaceable fuse bars designed to yield during a major earthquake. Precast cap beam is attached using the same technology. Unbonded PT runs up the interior void and is anchored in the cap beam to provide re-centering. Hollow columns make the details best suited for very large columns.
- Seismic performance of 1/4 scale specimen was tested.

References:

- Taira et al. (2009)

Contact Information:

- Yoshihiko Taira – ytaira@smcon.co.jp

EVALUATION

Constructability:
Risk Value: -2

- Steel shell adds cost and must be fabricated and located in the form very accurately. Fuse bars are likely to be activated only at one location (bottom).
- Fuse bars can be replaced after an earthquake to restore column capacity.
- Correct alignment of fuse bars during fabrication and on site is critical.
- Segments probably need to be cast vertically.
- As shown, the tendon must be installed first and segments threaded over it.

Seismic Performance:
Value: +1

- PT minimizes column residual displacement after an earthquake.
- Inner shell likely inhibits inwards crushing of the wall.
- Damage is concentrated in the fuse bars at the first joint above the base. Deformation capacity of short fuse bars may be a problem.

Inspectability:
Value: -1

- PT system hard to inspect (at bottom) during construction, more difficult during service.

Durability:
Value: -1

- Corrosion protection system for PT cables unclear. They are in the void and may be vulnerable.
- Fuse bars and steel details need protection/painting.

Time Saving Potential:
Value: -2

- Many extra pieces to connect (mortar joints, fuse bars, PT).
- Accurate alignment needed.

TRL Comments:

-

Additional Comments:

- Point of access to fuse bars for replacement after an earthquake is not clear.

Location:	Column to footing and cap beam	**Type:**	Hybrid: Precast column and cap beam with three different column Details ED and DE
Title:	Connection H-3 Hybrid with three column types	**TRL:**	Maximum TRL: 7 TRL Gaps: Levels 3
Source:	University of California San Diego		

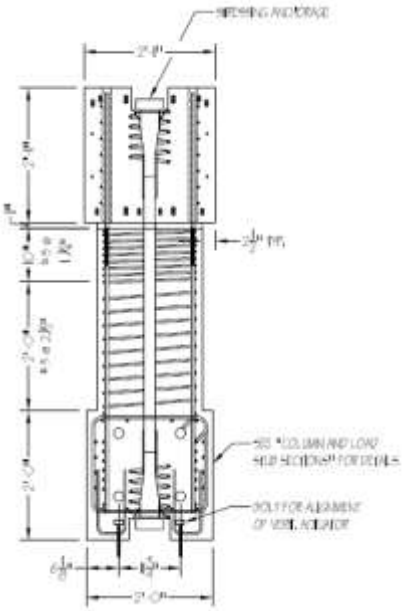

Conventional precast concrete column

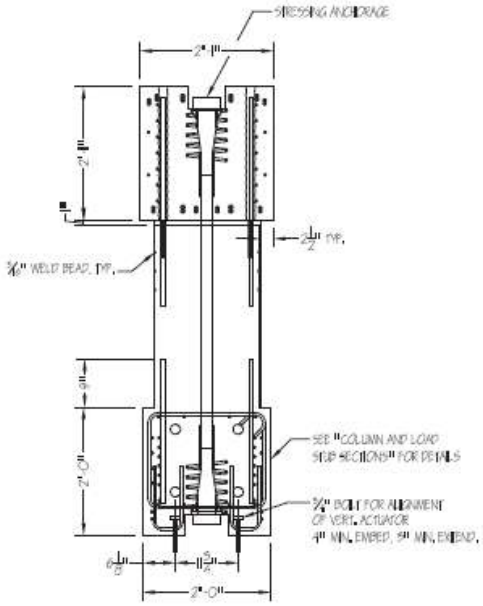

Concrete filled steel pipe column

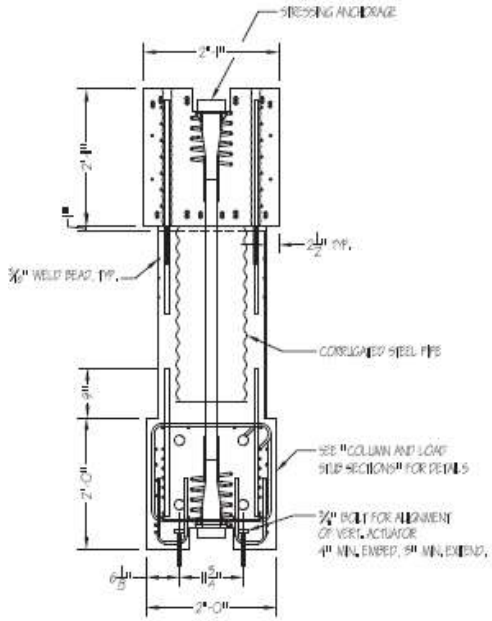

Concrete filled dual shell column

BACKGROUND

Title: **Connection** H-3 (Hybrid with three column types)

History / Description:

- Three hybrid columns were tested: one solid precast concrete column, one concrete-filled steel pipe column, and one dual shell assembly with outer and inner steel pipes. Stainless steel ED bars were connected to the cap beam with grouted ducts. Bars were locally debonded at the connection interface. For the steel pipe specimens, ED bars were provided only at the joint and did not extend full column height.

References:

- Restrepo et al. (2010)
- Tobolski and Restrepo (2010)

Contact Information:

- Prof. Jose Restrepo (UC San Diego) – jrestrepo@ucsd.edu

EVALUATION

Constructability:
Risk Value: -1

- Post-tensioning adds an extra construction step.
- Hollow center in dual shell specimen reduces column weight.

Seismic Performance:
Value: +1

- An ultimate drift capacity of 6% and reduced residual displacement was achieved in all specimens.
- For the two specimens with steel pipes, damage to the grout bedding layer after 2% drift led to continuous strength reduction. Researchers suggest use of fiber-reinforced grout to reduce damage.
- The steel pipe(s) provide concrete confinement and shear reinforcement.
- The stainless steel ED bars provide a higher strain capacity than mild steel.
- Inset anchor heads may lead to joint shear problems.

Inspectability:
Value: -1

- Depends on access to the PT anchors, which are the most vulnerable elements.

Durability:
Value: -1

- Joint is in compression – inhibits moisture ingress.
- Stainless steel ED bars provide better corrosion resistance.
- Need corrosion protection details for PT strand and anchorages.

Time Saving Potential:
Value: +1

- Precasting the cap beam saves time. PT adds time.

TRL Comments:

- Makes use of technology already well studied in the building industry.

Additional Comments:

-

Location:	Foundation to column	**Type:**	Hybrid: Precast hollow pier to CIP footing with bonded PT bars Moderate seismic zone. ED and DE
Title:	Connection H-4 FHWA Connection Manual – 3.1.4.1.B	**TRL:**	Maximum TRL: 8 TRL Gaps: Levels 5, 6, 7
Source:	New York State DOT		

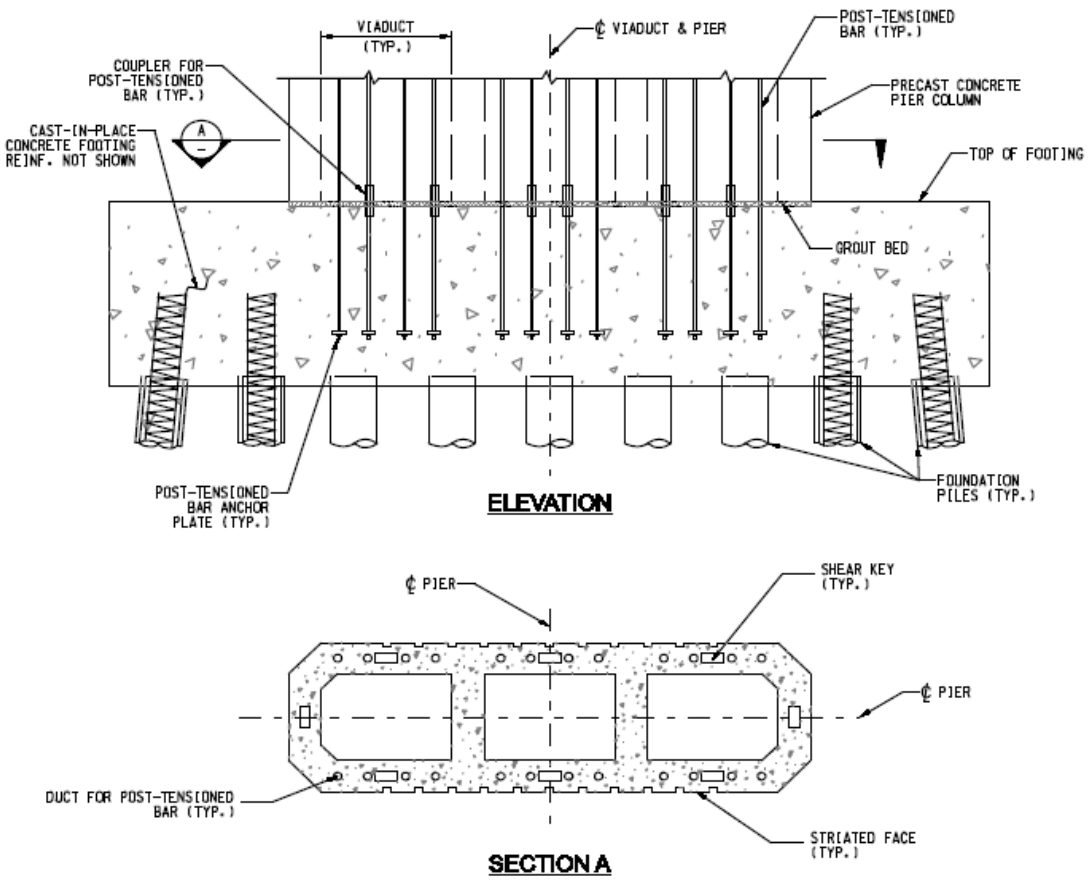

BACKGROUND

Title: **Connection H-4** (FHWA Connection Manual – 3.1.4.1.B)

History / Description:

- Precast concrete segments of a hollow pier are connected to the footing and each other with PT bars. Segments were match cast and bonded with epoxy. At the base of the pier, the voids were filled with concrete. The bars are grouted into galvanized ducts and embedded in the footing with anchor plates. PT bars are spliced in stages.
- Replacement of I-287 Viaduct over the Saw Mill River Parkway

References:

- FHWA Connection Manual – 3.1.4.1.B (FHWA, 2009)
- Correspondence with NYSDOT

Contact Information:

- Nicolas A. Choubah (New York State DOT) – nchoubah@dot.state.ny.us
- Mike Twiss (New York State DOT) – mtwiss@dot.state.ny.us

EVALUATION

Constructability:
Risk Value: +1

- Columns and girders were designed CIP. Contractor submitted CRIP to use precast for both, suggesting that Construction Risk was acceptable. Saved approximately 9 months of 3 year contract.
- Column segments were cast vertically to create voids and architectural details
- Accurate placement of PT bars in footing to match pier layout is critical.
- Segments were lifted high over projecting bars.

Seismic Performance:
Value: -1

- Hollow box pier design lacks internal concrete confinement. Plastic hinge zone was filled with low strength concrete.
- Grouted PT bars were designed to remain elastic. Not suitable for high seismic zone.
- Bar splice occurs in plastic hinge zone.
- Footing must transfer forces from PT to (tension) piles.
- Depending on height to width ratio, need to check shear sliding at grout bed

Inspectability:
Value: 0

- The PT bars are critical. As built, inspection access to them is about the same as for CIP.

Durability:
Value: 0

- Grouting provides protection to PT bars. Durability depends on detail at top of pier.
- PT bars keep concrete under compression, inhibiting moisture entry.

Time Saving Potential:
Value: +1

- The project, which had an anticipated duration of 3 years, finished approximately 9 months ahead of schedule.

TRL Comments:

- As shown, suitable only for low to moderate seismic zones.
- TRL of 8 based on NY being a seismic zone.

Additional Comments:

-

Location:	Column to footing and cap beam	**Type:**	Hybrid: Precast segmental concrete column and cap beam with unbonded PT and DFRCC ED and DE
Title:	Connection H-5 Precast segmental column with DFRCC	**TRL:**	Maximum TRL: 6 TRL Gaps: Level 3
Source:	Stanford University		

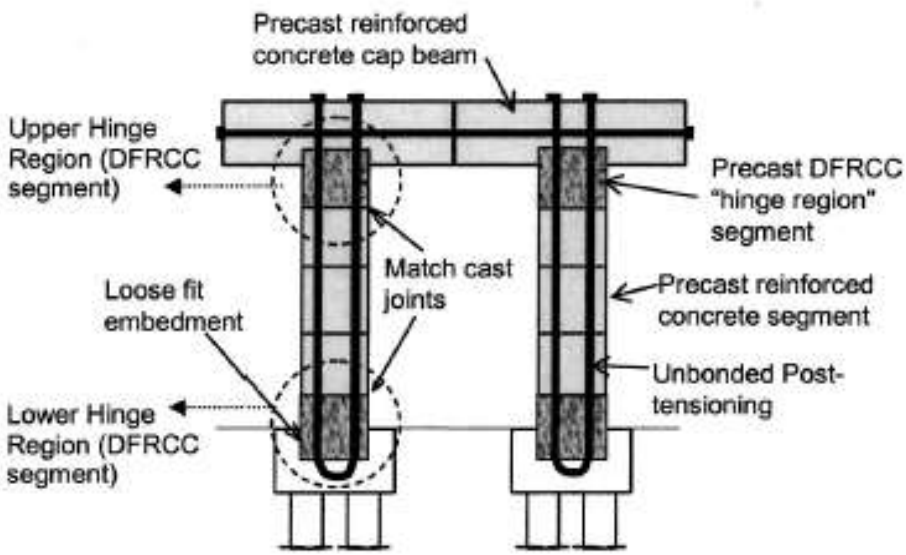

BACKGROUND

Title: **Connection H-5** (Precast segmental column with DFRCC)

History / Description:

- A precast segmental concrete column is joined with unbonded post-tensioning. The column segments in the plastic hinge zone are constructed with ductile fiber-reinforced cement-based composites (DFRCC). No bonded steel is provided across the segment joints. Transverse steel sufficient for shear strength requirements is provided. The first column segment is embedded in the footing to provide fixity.
- Both standard concrete and DFRCC specimens were tested experimentally at 1/6 scale. Large scale testing in Rouse and Billington (2003).

References:

- Billington and Yoon (2004); Lee and Billington (2009)
- Kwan and Billington (2003) – Analytical study of hybrid bridge system

Contact Information:

- Prof. Sarah Billington (Stanford University) – billington@stanford.edu

EVALUATION

Constructability:
Risk Value: -1

- Details and procedures for bonding the PT anchorage in the footing need to be developed.
- It might be possible to thread the PT strands into the U-shaped duct after erecting the column segments. If not, the tendon must be installed first and segments threaded over it.

Seismic Performance:
Value: +2

- DFRCC provides hysteretic energy dissipation since no ED steel is used. The material exhibits strain hardening behavior under uniaxial tension tests. It also provides high damage tolerance through micro-cracking. The DFRCC specimens did not spall, even at 9% drift.
- Tests showed better re-centering than with comparable RC column. After reaching 4% drift, residual drift was less than 0.2%, compared to 1-2% for RC.

Inspectability:
Value: -1

- Potential access problems to PT anchorages.

Durability:
Value: -1

- Need corrosion protection details for PT strand and anchorages. Absence of bottom anchorages is helpful.
- Otherwise similar to, or slightly better than, CIP, because concrete is under compression, which inhibits ingress of moisture.

Time Saving Potential:
Value: 0

- PT adds an extra step. Precasting the cap beam saves time.
- PT shown extending into footing. If restricted to column alone, socket connection at bottom with no bars crossing interface could save time.

TRL Comments:

-

Additional Comments:

-

Location:	Column to cap beam	**Type:**	Hybrid: Precast concrete column with grouted deformed bars and unbonded PT bars. ED and DE
Title:	Connection H-6 Precast column with unbonded PT	**Readiness:**	Maximum TRL: 6 TRL Gaps: Levels 3 and 5
Source:	University of Washington		

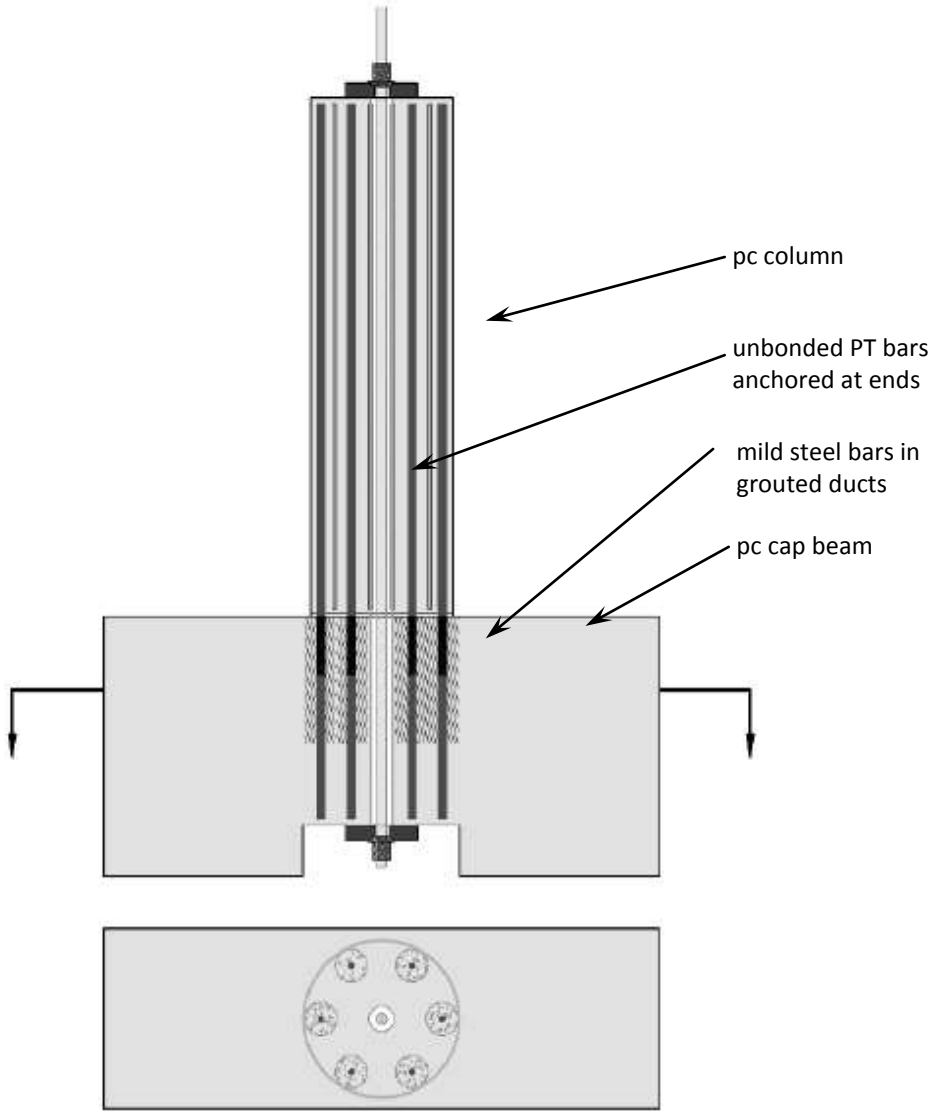

BACKGROUND

Title: **Connection H-6**

History / Description:

- A precast column is connected to the cap beam using a combination of deformed bars grouted in ducts and unbonded PT bars anchored in the cap beam. A similar detail is envisaged for the column to footing connection. The grouted bars dissipate energy and the unbonded PT re-centers the column elastically.
- Pseudo-static, cyclic tests

References:

- Cohagen et al. (2008)

Contact Information:

- Prof. Marc Eberhard (University of Washington) – eberhard@u.washington.edu

EVALUATION

Constructability:
Risk Value: -1

- Post-tensioning adds an extra construction step.
- Bars must be anchored at the foundation – details needed.

Seismic Performance:
Value: +1

- Tests showed better re-centering than with comparable RC column.
- Maximum drift and damage levels about the same as RC. Higher than needed.

Inspectability:
Value:-1

- Potential problems with inspection of PT bars at footing connection.

Durability:
Value: -1

- Need corrosion protection details for PT bar and anchorages. Bars are less corrosion prone than strand, but have less strain capacity.
- Otherwise similar to, or slightly better than, CIP, because concrete is under compression, which inhibits ingress of moisture.

Time Saving Potential:
Value: -1

- PT adds an extra step. Precasting the cap beam saves time.

TRL Comments:

- TRL 3 (non-seismic deployment) is classed as a gap, but temporary PT bars are used in many places for clamping p/c components while epoxy sets in the joint.

Additional Comments:

-

Location:	Column to footing	**Type:**	Hybrid: Precast concrete column with grouted deformed bars and unbonded PT bars ED and DE.
Title:	Connection H-7 Precast column with unbonded PT	**Readiness:**	Maximum TRL: 6 TRL Gaps: Levels 3 and 5
Source:	Mahin et al.		

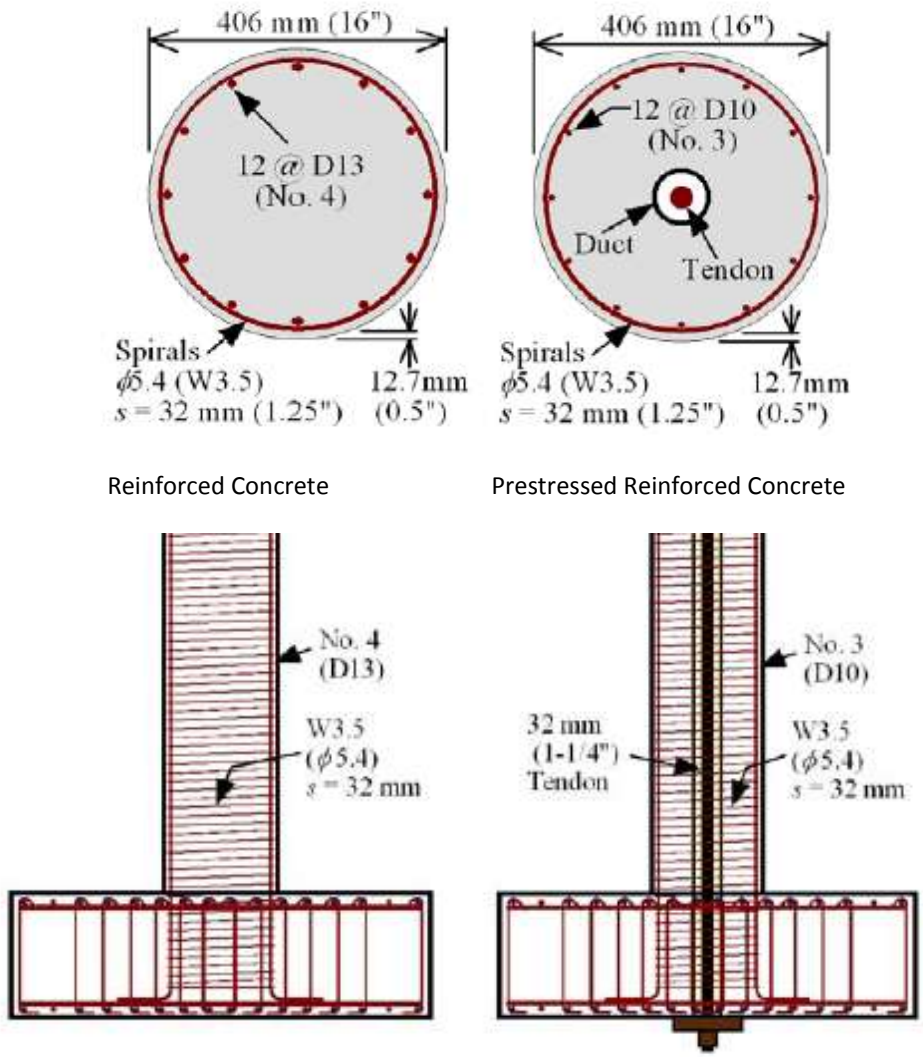

BACKGROUND

Title: **Connection H-7** (Precast column with unbonded PT)

History / Description:
- A precast column is connected to the footing and cap beam using a combination of deformed bars grouted in ducts and unbonded PT bars. The grouted bars dissipate energy and the unbonded PT re-centers the column elastically.
- Single column shake table tests

References:
- Mahin et al. (2006), Lee et al. (2007)

Contact Information:
- Prof. Stephen Mahin (UC Berkeley) – mahin@ce.berkeley.edu

EVALUATION

Constructability:
Risk Value: -1
- Post-tensioning adds an extra construction step.
- Bars must be anchored at the foundation – details needed.

Seismic Performance:
Value: +1
- Tests showed better re-centering than with comparable RC column.
- Maximum drift and damage levels about the same as RC. Higher than needed.

Inspectability:
Value: -1
- Potential problems with inspection of PT bars at footing connection.

Durability:
Value: -1
- Need corrosion protection details for PT bar and anchorages. Bars are less corrosion prone than strand, but have less strain capacity.
- Otherwise similar to, or slightly better than, CIP, because concrete is under compression, which inhibits ingress of moisture.

Time Saving Potential:
Value: *-1*
- PT adds an extra step. Precasting the cap beam (not shown, but possible) would save time.

TRL Comments:
- TRL 3 (non-seismic deployment) is classed as a gap, but temporary PT bars are used in many places for clamping pc components while epoxy sets in the joint.

Additional Comments:
- Improved details are desirable for the column at the footing to reduce crushing.
- Tests also included a column specimen with a confining steel jacket.

Location:	Column to footing and cap beam	**Type:**	Hybrid: Precast unbonded pre-tensioned column with deformed ED bars, socket connections both ends.
Title:	Connection H-8 Unbonded pre-tensioned column	**TRL:**	Maximum TRL: 4 TRL Gaps: Level 3
Source:	University of Washington		

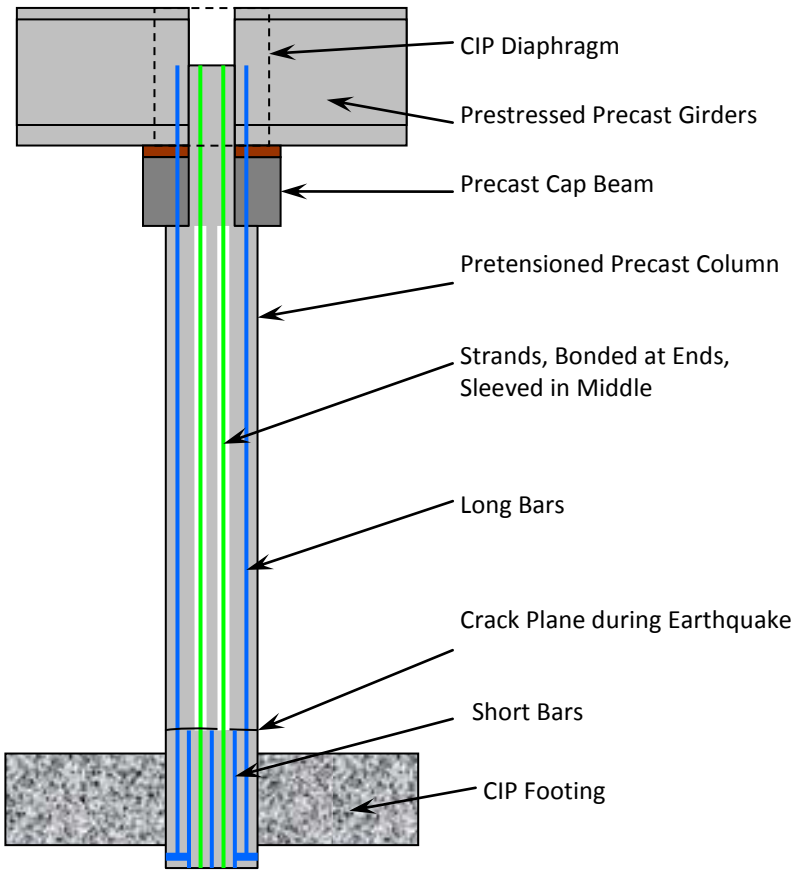

BACKGROUND

Title: **Connection H-8** (Unbonded pre-tensioned column)

History / Description:
- A pre-tensioned column has the strands debonded by sleeving in the central section. It is embedded in the footing using a socket connection, and in the cap beam using a modified socket. The strands provide re-centering, while the bars dissipate energy. No post-tensioning is needed on site.
- To be tested in Feb 2011.

References:
- Stanton et al. (2010) – Presentation at PEER annual meeting

Contact Information:
- Prof. John Stanton (University of Washington) – stanton@u.washington.edu

EVALUATION

Constructability:
Risk Value: 0
- No bars project into the footing. Socket connection there is simple.
- Top connection is made using bars grouted in ducts and central stub grouted in a corrugated steel tube socket.

Seismic Performance:
Value: +1
- (Estimated). Strands re-center the system after ground motion stops.
- Column vertical bars have headed anchors – provide better joint shear behavior on footing than bent-out bars in conventional RC footing.
- Anchorage of strands needs to be demonstrated by test.

Inspectability:
Value: 0
- No problems at the footing.
- Ducts must be grouted at the cap beam, but they are open at the top.

Durability:
Value: +1
- Pre-tensioned girders have a 50 year history of excellent field durability.
- Column concrete is in compression, prevents ingress of moisture.

Time Saving Potential:
Value: +2
- Connections are socket type.

TRL Comments:
- Level 3 (non-seismic deployment) is classed as a gap, but countless pretensioned girders have been deployed successfully.

Additional Comments:
- The detail allows unbonded prestressing without the problems associated with field installation.