Appendix H

Proposed revision to Standard Method of Test for Tensile Resilient Modulus of Asphalt Mixtures Using the Superpave Indirect Tension (IDT) Test

Standard Method of Test for

Tensile Resilient Modulus of Asphalt Mixtures Using the Superpave Indirect Tension (IDT) Test

AASHTO Designation:

1 SCOPE

1.1. This standard provides procedures for determining the tensile resilient modulus of asphalt mixtures using the Superpave Indirect Tension (IDT) test.

1.2. The procedures described in this standard apply to dense graded, gap graded and open graded test specimens prepared from either field cores or laboratory compacted samples. Test specimens under these procedures are nominally 150 mm (6 in) in diameter.

1.3. The values stated in SI units are regarded as the standard. Values in parentheses are for informational use.

1.4. *These tests may involve hazardous materials, operations, and equipment. This standard does not purport to address all of the safety concerns associated with its use. It is the responsibility of the user of this standard to establish appropriate safety and health practices and to determine the applicability of regulatory limitations prior to use.*

2. REFERENCED DOCUMENTS

2.1. *AASHTO Standards*:

- M 323 Superpave Volumetric Mix Design.
- R 30-02 Mixture Conditioning of Hot Mix Asphalt (HMA).
- R 35 Superpave Volumetric Design for Asphalt Mixtures.
- T 166 Bulk Specific Gravity (G_{mb}) of Compacted Hot Mix Asphalt (HMA) Using Saturated Surface-Dry Specimens.
- T 168-03 Sampling Bituminous Paving Mixtures.
- T 209 Theoretical Maximum Specific Gravity (G_{mm}) and Density of Hot Mix Asphalt (HMA).
- T 269 Percent Air Voids in Compacted Dense and Open Asphalt Mixtures.
- T 275 Bulk Specific Gravity (G_{mb}) of Compacted Hot Mix Asphalt (HMA) Using Paraffin-Coated Specimens.

- T 312 Preparing and Determining the Density of Asphalt Mixture Specimens by Means of the Superpave Gyratory Compactor.
- T 331 Bulk Specific Gravity (G_{mb}) and Density of Compacted Hot Mix Asphalt (HMA) Using Automatic Vacuum Sealing Method.

2.2. *ASTM Standards*:

- D1188 Test Method for Bulk Specific Gravity and Density of Compacted Bituminous Mixtures Using Coated Samples.
- D2041 Test Method for Theoretical Maximum Specific Gravity and Density of Bituminous Paving Mixtures.
- D2726 Test Method for Bulk Specific Gravity and Density of Non-Absorptive Compacted Bituminous Mixtures.
- D3203/D3203M Standard Test Method for Percent Air Voids in Compacted Dense and Open Bituminous Paving Mixtures.
- D3549/3549M Standard Test Method for Thickness or Height of Compacted Bituminous Paving Mixture Specimens.
- D5361/D5361M Standard Practice for Sampling Compacted Bituminous Mixtures for Laboratory Testing.
- D6752 Test Method for Bulk Specific Gravity and Density of Compacted Bituminous Mixtures Using Automatic Vacuum Sealing Method.
- D6857 Test Method for Maximum Specific Gravity and Density of Bituminous Paving Mixtures Using Automatic Vacuum Sealing Method.

2.3. *Other document*:

- The Superpave Mix Design Manual for New Construction and Overlays.

3. TERMINOLOGY

3.1. *Gage length (GL)*—Reference distance to record displacement during testing.

3.2. *Seating load ($P_{seating}$)*—Minimum load that remains on a specimen throughout a test. Seating load is applied to test specimens to ensure proper contact to the loading head.

3.3. *Peak load (P_{peak})*—Maximum load applied to the sample.

3.4. *Repeated load ($P_{repeated}$)*—Difference between maximum load and seating load (Ppeak-Pseating). It is the load used to calculate resilient modulus.

3.5. *Resilient strain*—Strain recovered upon removal of stress. Total resilient strain includes both the instantaneous and the time dependent strain recovered during a rest period.

3.6. *Resilient modulus (M_R)*—Ratio of applied stress to total resilient (recoverable) strain under repeated load.

3.7. *Poisson's ratio (v)*—Absolute value of the ratio of transverse strain to the corresponding axial strain resulting from uniformly distributed axial stress below the proportional limit of the material.

4. SUMMARY OF METHOD

4.1. *Tensile resilient modulus test*—The tensile resilient modulus test is performed in a load-controlled mode. Resilient modulus is determined by applying a repeated haversine waveform load for 0.1 seconds, followed by a rest period of 0.9 seconds. Load is applied along the vertical diametral axis of a test specimen. Horizontal and vertical deformations measured near the center of the specimen are used to calculate the resilient modulus. The magnitude of the load is selected to maintain the material response within the linear viscoelastic range throughout the test. This is typically accomplished by keeping the horizontal deformation between 0.0015 and 0.0040 mm (50-150 micro-inches). By measuring both horizontal and vertical deformations in regions where stresses are relatively constant and away from the localized non-linear effects induced by the steel loading heads, Poisson's ratio can be accurately determined. Note that resilient modulus is sensitive to Poisson's ratio measurements.

4.2. *Testing sequence*—This test can be performed as a stand-alone routine or test specimens can be subjected to the following testing sequence:

1. Tensile resilient modulus test
2. Tensile creep test
3. Tensile fracture test

4.3. *Testing temperature*—Resilient modulus test shall be performed at 10 ºC.

4.4. *Test specimen dimensions*—Test specimens shall nominally be 150 mm (5.9 in) in diameter and 38 to 50 mm (1.5-2 in) in thickness (i.e., disk-shaped specimens).

Note 1—Recommended specimen thickness is 38 mm (1.5 in) for dense graded and gap graded mixtures and 50 mm (2 in) for open graded mixtures.

4.5. *Number of replicates*—Three replicate test specimens are recommended for any asphalt mixture under evaluation. Results from the three replicates are analyzed as a group.

5. SIGNIFICANCE AND USE

5.1. Tensile resilient modulus can be used with structural response analysis models to predict pavement response to traffic loads, and with pavement design procedures to design pavement structures. Furthermore, tensile resilient modulus can be used to isolate the energy associated with the elastic response of the material during the loading process.

5.2. This procedure is suitable for any asphalt mixture gradation. Nominal maximum aggregate size (NMAS) shall not exceed 19 mm for 38-mm (1.5-in) thick specimens or 25 mm for 50-mm (2-in) thick specimens.

5.3. The values stated in either SI units or U.S. customary units are to be regarded separately as standard. The values stated in each system may not be exact equivalents; therefore, each system shall be used independently of the other. Combining values from the two systems may result in non-conformance with the standard.

6. APPARATUS

6.1. *Loading device*—The testing machine shall be a closed-loop, servo-hydraulic or pneumatic testing machine with a function generator capable of applying a haversine shaped load pulse over the range of load durations, load levels, and rest periods described in this standard method. The load frame should be capable of handling a minimum load of 22 kN (5,000 lbf).

6.2. *Loading heads*—Loading strip heads shall be 20 mm (0.75 in) wide. Further details on loading head dimensions can be found in Appendix 1.

6.3. *Gage points*—Four targets or gage points shall be glued onto both faces of the specimen along the vertical and horizontal axes. These gage points shall be either aluminum or steel depending on the measurement system that will be used. Reference dimensions for gage points are 8 mm (5/16’’) in diameter and 3 mm (1/8’’) in height.

6.4. *Gage point mounting system*—A gage point mounting system is required to precisely attach the gage points on test specimens. The system may have two adjustable heads that hold the four gage points that are placed on either face of the specimen by vacuum. This system guarantees that the gage points on one face of the specimen are precisely aligned with the gage points on the other face. Further details are presented in Appendix 2.

6.5. *Contact point template*—A template shall be used for marking the exact contact point of loading heads so that loading heads are perfectly aligned with gage points. Dimensions can be found in Appendix 3.

6.6. *Temperature control system*—The temperature control system shall be capable of maintaining temperature control within ±0.5 ºC (measured near the center of the chamber), at settings ranging from 0 to 25 ºC. The system shall include a temperature-controlled cabinet large enough to house the loading heads and specimen constraint

system as well as three test specimens. A thermally sealed access port for thermocouple or electrical feed through is also required.

6.7. *Measuring and recording system*—The measuring and recording system shall include sensors for measuring and simultaneously recording horizontal and vertical deformations on both faces of a test specimen as well as the load applied to the specimen. The system shall be capable of recording horizontal deformations with a resolution of 0.00025 mm (10 micro-inches). The system shall also be capable of recording vertical deformation with a resolution of 0.00050 mm (20 micro-inches). Load cells shall be accurately calibrated with a resolution of 5 N (1 lbf) or better. In all cases, the noise in the recording system should be less than the accuracy of the deformation measurement devices being used.

6.7.1. *Recorder*—The measuring or recording devices must provide real time deformation and load information and should be capable of monitoring readings at a minimum of 500 points/second. These parameters shall be recorded on an analog to digital or digital data acquisition system. The data acquisition system must be able to record time, load, and four deformation measurement devices.

6.7.2. *Deformation measurement*—The values of vertical and horizontal deformation shall be measured with 38 mm (1.5 in) gage point mounted extensometers with a full scale travel of 0.5 mm (0.02 in). The extensometers must be capable of performing within the temperature range prescribed in the test procedure.

6.7.3. *Load measurement*—Load shall be measured with an electronic load cell with a capacity of 22 kN (5,000 lbf) and a sensitivity of ±5 N (±1 lbf). The capacity of the load cell shall be matched as closely as possible to the expected testing load ranges to allow adequate feedback response.

6.8. *Specimen sawing apparatus*—A specimen sawing device will be used to cut parallel, smooth and plane top and bottom faces for preparation of test specimens. A water-cooled masonry saw has been found to perform this function adequately.

6.9. *Humidity cabinet*—A chamber that can control to ±5 % relative humidity is necessary to condition specimens. This cabinet or chamber must be large enough to accommodate the number of specimens expected to be tested over 2 days.

7. HAZARDS

7.1. Observe standard laboratory safety precautions when preparing and testing asphalt mixture specimens.

8. STANDARDIZATION

8.1. Calibrate the testing system prior to initial use and at least once a year thereafter.

8.1.1. Calibrate the environmental control component to maintain the required temperature within the specified accuracy.

8.1.2. Calibrate all measurement components (such as load cells and displacement transducers) of the testing system.

8.1.3. If any of the verifications yield data that do not comply with the accuracy specified, correct the problem prior to proceeding with testing. Appropriate action may include correction of menu entries, maintenance on system components, calibration of system components (using an independent calibration agency, or service by the manufacturer, or in-house resources), and replacement of system components.

9. SAMPLING

9.1. *Laboratory compacted samples*

9.1.1. *Sample preparation*—Prepare 150-mm diameter Superpave gyratory compacted pills in accordance with AASHTO T 312 (4500 g aggregate weight). Target air void content of dense graded asphalt mixtures shall be 7±0.5 % to simulate the upper end of acceptable compaction level in the field. Note that up to two test specimens can be obtained by slicing a single Superpave pill. Therefore, two Superpave pills are required for a minimum of three replicate test specimens.

9.1.2. *Conditioning*—Asphalt mixture may be subjected to short-term and long-term oxidative conditioning following the standard practice in AASHTO R 30-02. Additional conditioning may be introduced at user's discretion. The purpose of this process is to evaluate how material properties and expected performance change with conditioning level.

9.2. *Field cored samples*—Obtain field cores from a pavement section in accordance with ASTM D5361/D5361M. Extracted cores, which may contain one or more testable layers, must have smooth and uniform vertical (curved) surfaces. Cores that are obviously deformed or have any visible cracks must be rejected. Irregular top and bottom surfaces shall be trued up as necessary. Individual layer specimens shall be obtained by slicing. Prepare a minimum of three replicate test specimens per individual layer.

10. SPECIMEN PREPARATION AND PRELIMINARY DETERMINATIONS

10.1. Laboratory compacted samples or field cored samples shall be sliced to the appropriate test specimen dimensions using the apparatus described in 6.8. Smooth and parallel surfaces must be obtained after slicing. A minimum of three test specimens shall be obtained from slicing a series of laboratory compacted samples or field cored samples.

Note 2—Measurements taken on cut faces yield more consistent results, and gage points can be attached with much greater bonding strength.

10.2. *Test specimen dimensions*—Prepare test specimens with a nominal diameter of 150 mm (5.9 in) and a thickness between 38 and 50 mm (1.5-2.0 in).

Note 3—Recommended specimen thickness is 38 mm (1.5 in) for dense graded and gap graded mixtures and 50 mm (2 in) for open graded mixtures.

10.3. *Determining specimen diameter (Φ)*—Determine and report the diameter of each test specimen to the nearest 0.1 mm (0.01 in) by averaging two diameters measured at right angles to each other at about mid-thickness of the specimen.

10.4. *Determining specimen thickness (h)*—Determine and report the thickness of each test specimen to the nearest 0.1 mm (0.01 in) by averaging four measurements located at approximately quarter points around the perimeter and 15 to 25 mm (0.5-1 in) in from the specimen edge, in accordance with ASTM D3549.

10.5. *Determining specimen bulk specific gravity (Gmb)*—Determine the specific gravity of each specimen in accordance with AASHTO T 166, AASHTO T 275 or AASHTO T 331.

10.6. *Determining specimen air void content*— Determine the air void content of each specimen according to AASHTO T 269. This procedure requires prior determination of the theoretical maximum specific gravity of the mixture (Gmm).

10.7. *Specimen drying*—If specimens were immersed directly into water (e.g., for sawing and/or determining the bulk specific gravity), allow each specimen to dry at room temperature to a constant mass. Dehumidifiers can be used to expedite the drying process.

10.8. *Test specimen selection*—If more than three specimens are available, specimens are sorted by their air void content and grouped for testing. The average air void content per group shall be kept as close as possible to minimize the effect of air void content on properties measured.

10.9. *Additional mixture conditioning*—Additional conditioning may be performed at this stage to account for factors other than oxidative aging, such as cycle pore water pressure, UV radiation, freeze/thaw, etc.

10.10. *Gage point attachment*—Attach four gage points with a toughened cyanoacrylate adhesive to each flat face of the specimen by means of the mounting system described in 6.4. Gage points shall be centered at the middle quartile of both faces along two perpendicular directions, at a gage length of 38 mm (1.5 in). The placement and location of the gage points on each face shall produce a mirror image of each other.

10.11. *Marking contact points for loading heads*—Use the template described in 6.5 to mark the contact points where loading heads would be precisely aligned with a pair of gage points on each face. This action defines the vertical diametral axis along which load will be applied. A test specimen with attached gage points and marked contact points is shown in Appendix 4.

10.12. *Test specimen storage*—All specimens shall be stored in an environment where the temperature is maintained between 5 and 20 ºC until they are to be conditioned for testing.

10.13. *Test specimen conditioning*—Lower the temperature of the environmental chamber to the test temperature and, once the test temperature ±0.5 ºC is achieved, allow each specimen to remain at the test temperature for 3 ± 1 h prior to testing. Under no circumstances shall the specimen be kept at 0 ºC or less for more than 24 h.

10.14. *Mounting extensometers*—Extensometers shall be used to measure horizontal and vertical deformations on both faces of a test specimen. There are currently two extensometer systems widely used. One of these systems uses aluminum gage points on which knife edges are fixed by a set screw. The extensometers are then clipped onto these knife edges, one over the other. Another extensometer system have built-in magnets in both legs for attachment to steel gage points.

11. TESTING

11.1. *Alignment and stability*—Insert the test specimen into the loading device and position it so that the load alignment marks on the test specimen line up with the loading heads. The alignment between the specimen and loading heads is important for proper test results. Prior to performing the test, the extensometers shall be stable. Stability is defined as the extensometers (horizontal and vertical) not drifting by more than 0.00025 mm (10 micro-inches) over 100 seconds. If these tolerances are not met, it is an indication that the specimen has not stabilized at the test temperature.

Note 4— A continuous measurement of test specimen temperature indicated that a 30 min. temperature stabilization time is necessary for a test specimen to achieve the target testing temperature of 10 °C. Ruggedness testing indicated that the asphalt mixtures had statistically equal energy ratio when the temperature equilibrium time varied from 30 min. to 60 min.

11.2. *Seating load*—After stability is achieved, zero or rebalance the deformation measurement devices and apply a seating load of 50 N (10 lbf).

11.3. *Data baseline*—This test is preceded by one second worth of data just prior to starting the test, sampled at 10 Hz (10 data points per second), to establish a baseline or zero from which to reference the data.

11.4. *Replicates*—The test is performed in triplicate, i.e., three specimens are required for any material and the results are analyzed as a group. The experience gained testing the first specimen can be used with any additional specimens of the same material.

11.5. *Load function*—Apply a haversine load to the specimen for 0.1 seconds (on and off), followed by a rest period of 0.9 seconds. The applied load goes from the seating load to the operator selected peak load and returns to the seating load. This load pattern is repeated for a minimum of five cycles.

11.6. *Selection of peak load*— The magnitude of the peak load is adjusted so that the total horizontal deformation is between 0.0015 and 0.0040 mm (50-150 micro-inches). If the horizontal deformation falls outside these limits, stop the test and allow a minimum recovery time of 5 minutes before reloading at a different level. These limits prevent both non-linear response, characterized by exceeding the upper limit, and significant problems associated with noise and drift inherent in sensors when violating the lower limit. Initial trial peak load can be selected using Equation 1:

$$P = \frac{S \cdot h \cdot \Delta H_{Target}}{\nu + 0.27} \tag{1}$$

where:

S = estimated stiffness based on testing temperature. For 10 ºC, assume a value of 13 GPa (1,900,000 psi) for dense and gap graded mixtures and 7 GPa (1,000,000 psi) for open graded mixtures.

ν = estimated Poisson's ratio based on testing temperature. For 10 ºC, assume a value of 0.3.

h = specimen thickness (i.e., 38 mm or 1.5 in).

ΔH_{Target} = target horizontal deformation (e.g., 0.0030 mm or 120 micro-inches).

11.7. *Data acquisition*—For each specimen, loading and deformation data are recorded by transducers. Deformations are measured independently on each face of the specimen The data acquisition rate for this test is 500 Hz (500 data points per second) and a minimum of five load applications are required for data analysis.

Note 5—Five cycles are required to ensure at least three complete cycles are recorded.

12. DATA ANALYSIS

12.1. *Subscript convention*—For the purpose of clarity, subscript convention was developed. The subscript 'i' represents the specimen number in each test group (i = 1, 2 or 3), the subscript j represents the cycle number (j=1, 2 or 3) and the subscript 'k' represents the

specimen face (k = 1 or 2). Thus, a variable may have up to three subscripts of the following form: $X_{i,,k}$.

12.2. *Cycle selection*— For each specimen, determine which three cycles of the five recorded in the data file shall be used for analysis. Find the maximum load (P_{peak}) of the first recorded cycle in the data file. If the maximum occurs at or after 150 points from the start of the file, then the first three cycles recorded in the data file shall be used for subsequent analysis. If the maximum occurs less than 150 points from the start of the file, then the second, third and fourth cycles recorded in the test shall be used.

12.3. *Determine specimen seating load*—-For each specimen, determine the point at which P_{peak} occurs for cycle 1. Average the load from 80 points before Ppeak to 30 points before P_{peak} (50 points total):

$$P_{seating_i} = \frac{\sum_{l=t_{peak}-80}^{t_{peak}-50} P_l}{50} \tag{2}$$

12.4. *Determine cycle start and end points*

12.4.1. *Cycle start point*—Determine Ppeak for cycle j (Ppeak,j). Starting at Ppeak,j, and moving to the left, the start of cycle j is defined as the last data point for which the load is greater than Pseating+25 N (5 lbf). This instant shall be referred to as $sp_{i,j}$.

12.4.2. *Cycle end point*—Starting at $P_{peak,j}$, and moving to the right, the end point for cycle j is defined as the last data point for which the load is less than $P_{seating}$+25 N (5 lbf). This instant shall be referred to as $ep_{i,j}$.

12.5. *Determine repeated load*—For each cycle j on specimen i, repeated load is calculated:

$$P_{repeated_{i,j}} = P_{peak_{i,j}} - P_{seating_i} \tag{3}$$

$P_{repeated_{i,}}$ = repeated load for cycle j on specimen i.

$P_{peak_{i,}}$ = maximum load for cycle j on specimen i.

$P_{seating_i}$ = seating load of specimen i.

12.6. *Determination of maximum deformation*—Calculate maximum deformation along the horizontal and vertical axis for each specimen, cycle and face ($H_{max_{i,,k}}$ and $V_{max_{i,j,k}}$, respectively).

12.7. *Determination of minimum deformation*—To calculate minimum deformation along the horizontal and vertical axis for each specimen, cycle and face, regression lines must be developed from the deformation versus time trace. Starting at the start point of cycle j+1 ($sp_{i,j+1}$) and moving to the left, select the first 300 data points. Perform a least squares

linear regression on deformation versus time for selected data points. The resulting equation shall be as follows:

$$H_{i,j,k} = m_H \times t + b_H \tag{4}$$

$$V_{i,j,k} = m_V \times t + b_V \tag{5}$$

where,

$H_{i,,k}$ = horizontal deformation for specimen i, cycle j and face k.

$V_{i,,k}$ = vertical deformation for specimen i, cycle j and face k.

m_H = slope of the regression for horizontal deformation.

m_V = slope of the regression for vertical deformation.

b_H = intercept of the regression for horizontal deformation.

b_V = intercept of the regression for vertical deformation.

t = time.

The minimum deformation along the horizontal and vertical axis for each specimen, cycle and face ($H_{min_{i,,t}}$ and $V_{min_{i,j,t}}$, respectively) are calculated as:

$$H_{min_{i,j,k}} = m_H \times sp_{i,j+1} + b_H \tag{6}$$

$$V_{min_{i,j,k}} = m_V \times sp_{i,j+1} + b_V \tag{7}$$

12.8. *Calculation of total recoverable deformation*—Horizontal and vertical total recoverable deformation ($\Delta H_{i,j,k}$ and $\Delta V_{i,j,k}$, respectively) are calculated as follows:

$$\Delta H_{i,j,k} = H_{max_{i,j,k}} - H_{min_{i,j,k}} \tag{8}$$

$$\Delta V_{i,j,k} = V_{max_{i,j,k}} - V_{min_{i,j,k}} \tag{9}$$

12.9. *Data normalization*—In order to minimize the effects of specimen dimensions, a normalization factor $C_{norm_{i,j}}$ shall be applied to each specimen and cycle:

$$C_{norm_{i,j}} = \left(\frac{h_i}{h_{avg}}\right) \times \left(\frac{\Phi_i}{\Phi_{avg}}\right) \times \left(\frac{\mathrm{P}_{repeated_{i,j}}}{\mathrm{P}_{avg_j}}\right) \tag{10}$$

where:

$C_{norm_{i,}}$= normalization factor for cycle j of specimen i (dimensionless).

h_i= thickness of specimen i.

h_{avg}= average thickness of the three specimens in the test group:

$$H_{avg} = \frac{\sum_{i=1}^{3} h_i}{3} \tag{11}$$

Φ_i= diameter of specimen i.

Φ_{avg}= average diameter of the three specimens in the test group:

$$\Phi_{avg} = \frac{\sum_{i=1}^{3} \Phi_i}{3} \tag{12}$$

$P_{repeated_{i,}}$= repeated load for cycle j of specimen i.

P_{avg_j}= average cycle load for cycle j:

$$P_{avg_j} = \frac{\sum_{i=1}^{3} P_{repeated_{i,j}}}{3} \tag{13}$$

The normalized total recoverable horizontal and vertical deformations, $\Delta H_{norm_{i,,k}}$ and $\Delta V_{norm_{i,j,k}}$, for each specimen, cycle and face shall be calculated as follows:

$$\Delta H_{norm_{i,j,k}} = C_{norm_{i,j}} \times \Delta H_{i,j,k} \tag{14}$$

$$\Delta V_{norm_{i,j,k}} = C_{norm_{i,j}} \times \Delta V_{i,j,k} \tag{15}$$

12.10. *Determination of the trimmed average deformation*—There is a total of 6 sets of data (3 specimens, 2 faces/specimen) for each deformation and cycle. In the trimming process, deformation data are sorted, the highest and the lowest deformation values are removed and the remaining four deformation values are averaged as follows:

$$\Delta H_{trim\ avg,j} = \frac{\sum_{i=1}^{3}\sum_{k=1}^{2} \Delta H_{norm_{i,j,k}} - \Delta H_{norm_{j,max}} - \Delta H_{norm_{j,min}}}{2n-2} \tag{16}$$

$$\Delta V_{trim\ avg,j} = \frac{\sum_{i=1}^{3}\sum_{k=1}^{2} \Delta V_{norm_{i,j,k}} - \Delta V_{norm_{j,max}} - \Delta V_{norm_{j,min}}}{2n-2} \tag{17}$$

in which n is the total number of specimens (i.e., three).

12.11. *Calculation of Poisson's ratio*—It is calculated for each cycle from the following equation, which is valid within the range 0.05≤ν≤0.50:

$$\nu_j = -0.10 + \left[1.480 - 0.778 \times \left(\frac{h_{avg}}{\Phi_{avg}}\right)^2\right] \times \left(\frac{\Delta H_{trim\ avg,j}}{\Delta V_{trim\ avg,j}}\right)^2 \quad (18)$$

Note 6—If Poisson's ratio obtained from Eq. 18 exceeds 0.5, use ν=0.5. If Eq. 18 yields a value below 0.05, use ν=0.05

12.12. *Calculation of cycle averaged deformations*—Cycled averaged deformations ($\Delta H_{cycle\ avg}$ and $\Delta H_{cycle\ avg}$) are obtained as:

$$\Delta H_{cycle\ avg} = \frac{\sum_{j=1}^{3} \Delta H_{trim\ avg,j}}{3} \quad (19)$$

$$\Delta V_{cycle\ avg} = \frac{\sum_{j=1}^{3} \Delta V_{trim\ avg,j}}{3} \quad (20)$$

12.13. *Calculation of resilient modulus correction factor*—The following equation was developed to account for the effects of three-dimensional stress states in diametrally loaded specimens of finite thickness:

$$C_{mr} = 0.6354 \times \left(\frac{\Delta V_{cycle\ avg}}{\Delta H_{cycle\ avg}}\right) - 0.332 \quad (21)$$

12.14. *Calculation of cycle resilient modulus*—The resilient modulus for each cycle is obtained as follows:

$$M_{R,j} = \frac{GL \times P_{avg,j}}{\Delta H_{trim\ avg,j} \times \Phi_{avg} \times h_{avg} \times C_{mr}} \quad (22)$$

where:

$M_{R,}$= resilient modulus for cycle j.

GL= gage length (38 mm, 1.5 in).

$P_{avg,}$= average cycle load for cycle j:

Φ_{avg}= average diameter of the three specimens in the test group.

h_{avg}= average thickness of the three specimens in the test group.

C_{mr} = resilient modulus correction factor

12.15. *Specimen resilient modulus*—Specimen resilient modulus (MR) is calculated as the average of the three cycles:

$$M_R = \frac{\sum_{j=1}^{3} M_{R,j}}{3} \tag{23}$$

13. REPORT

13.1. *General information*

13.1.1. Maximum specific gravity of the asphalt mixture (G_{mm}) to the nearest 0.001.

13.1.2. Bulk specific gravity (G_{mb}) of each test specimen to the nearest 0.001.

13.1.3. Air void content of each test specimen to the nearest 0.1 percent.

13.1.4. Thickness (h) and diameter (Φ) of each test specimen to the nearest 0.1 mm (0.01 in).

13.1.5. Test temperature to the nearest 0.5 ºC.

13.2. *Tensile resilient modulus test*

13.2.1. Tensile resilient modulus to the nearest 10 MPa (100 psi).

14. PRECISION AND BIAS

14.1. *Precision*—The research required to develop precision estimates has not been conducted.

14.2. *Bias*—The test methods described in this standard have no bias because the values determined can be defined only in terms of the test methods.

15. KEYWORDS

15.1. Resilient modulus; stiffness; asphalt; cracking; elastic energy.

APPENDIXES

APPENDIX 1. Loading Heads

APPENDIX 1.A. Bottom Loading Head

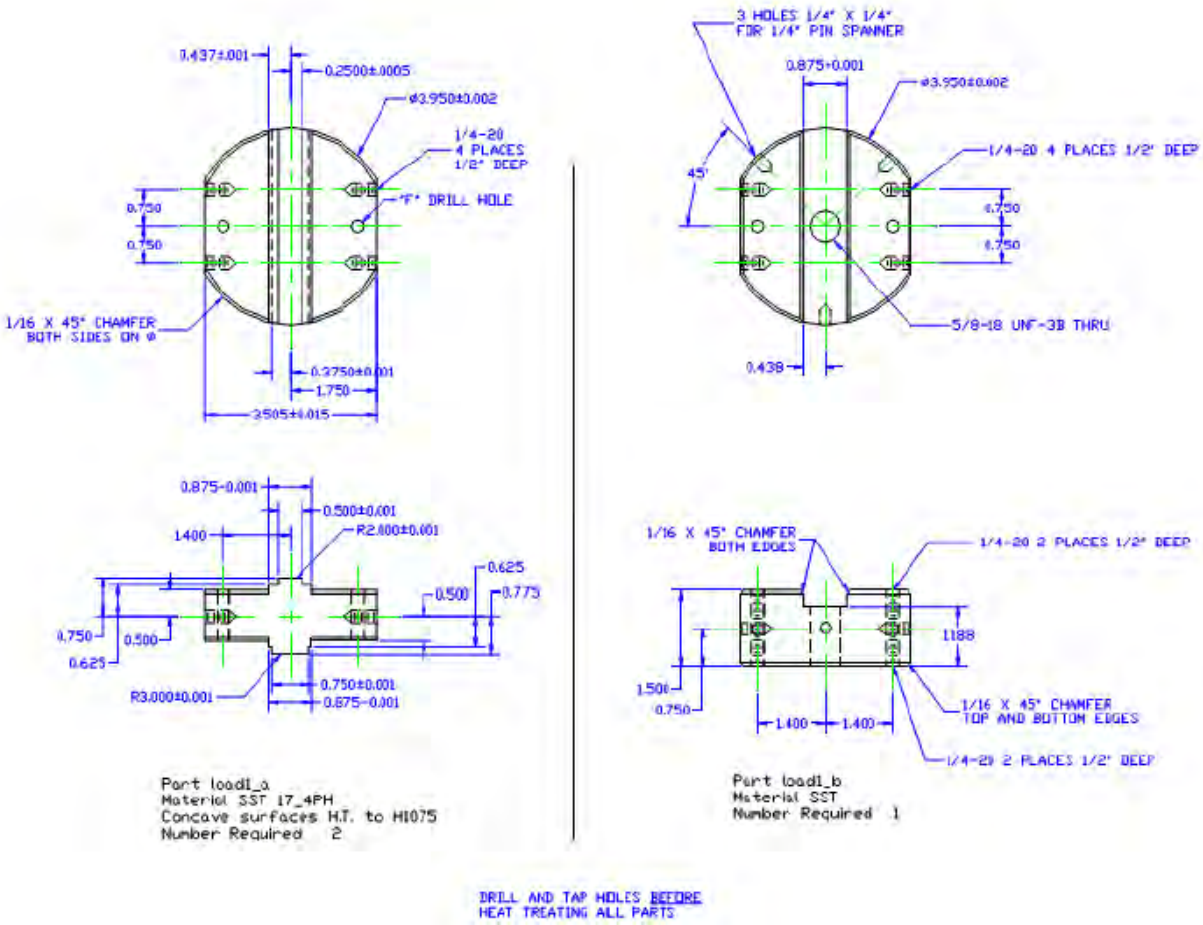

APPENDIX 1.B. Bottom Loading Head Subassembly

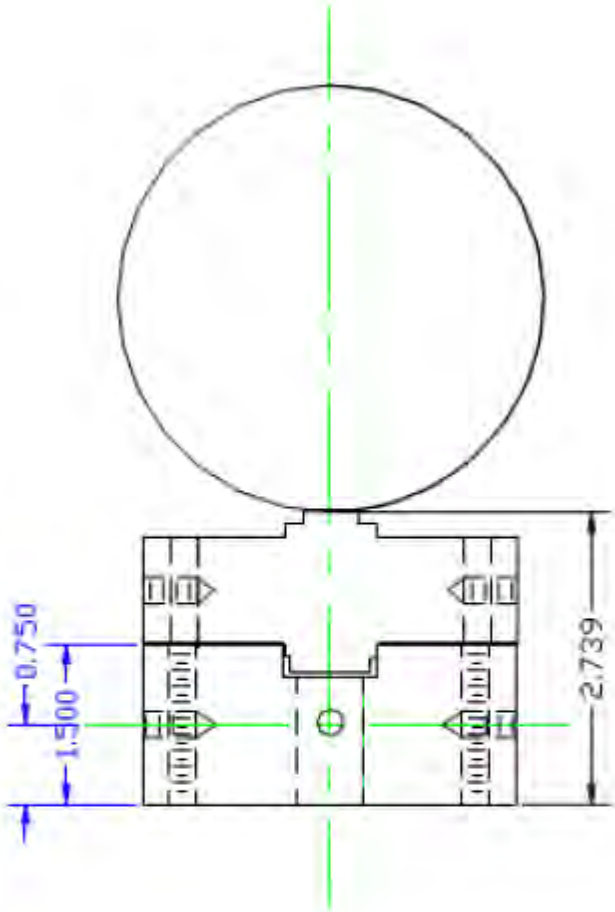

Part load1_b
Material SST
Number Required 1

APPENDIX 1.C. Top Loading Head

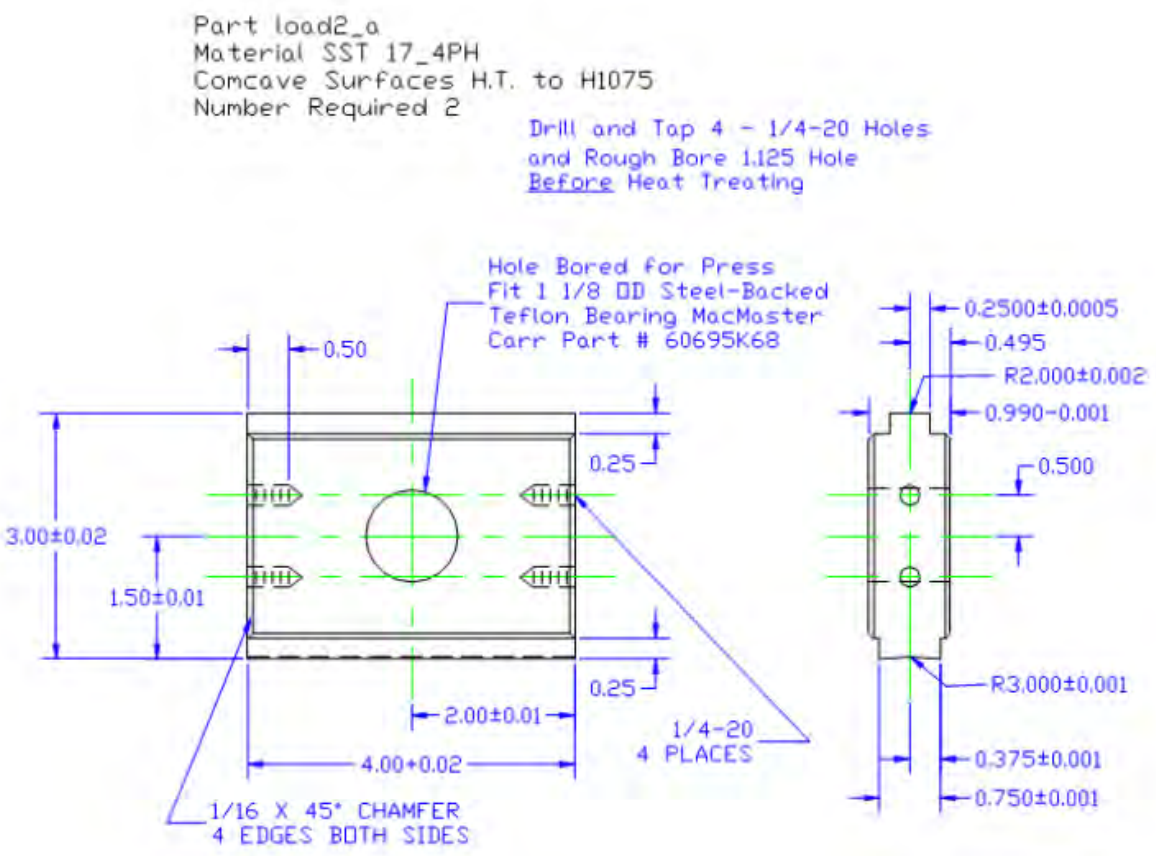

APPENDIX 1.D. Top Loading Head Swivel Block

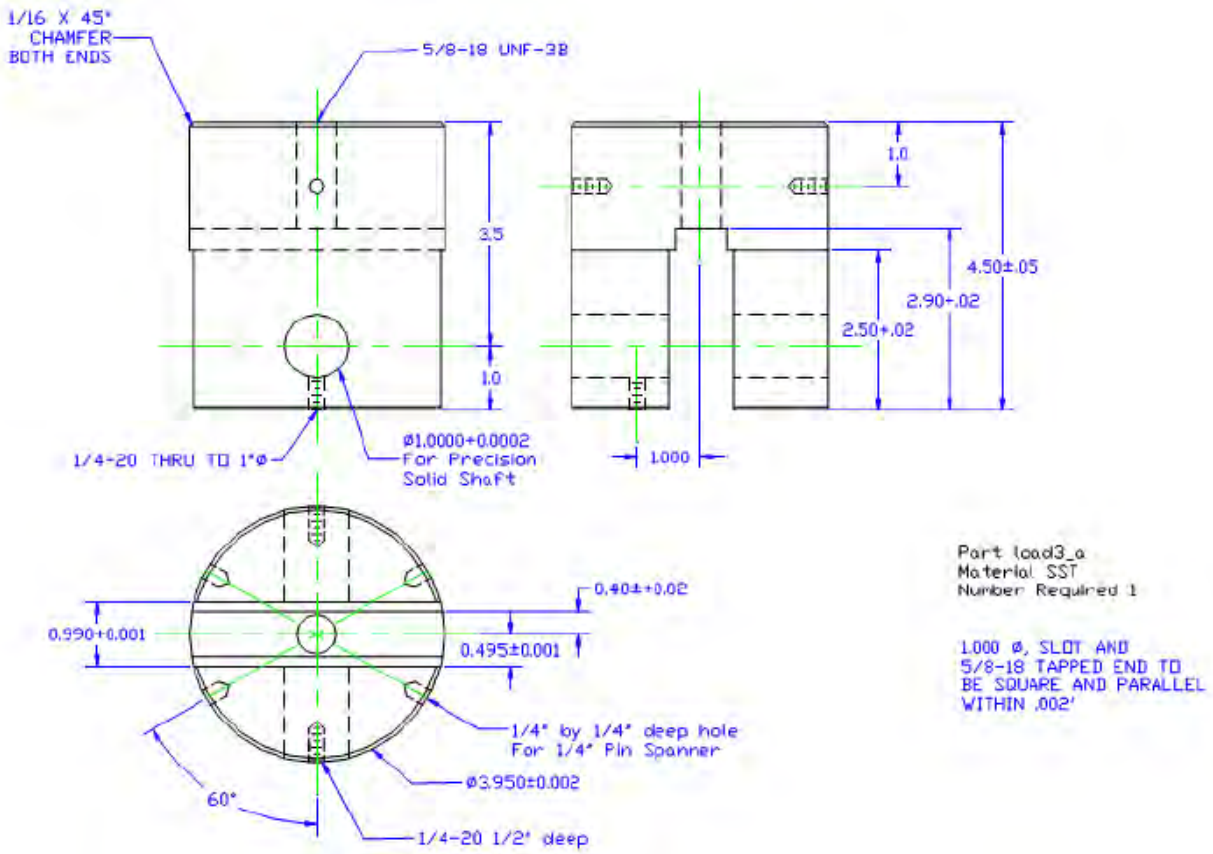

APPENDIX 2. Gage Point Mounting System

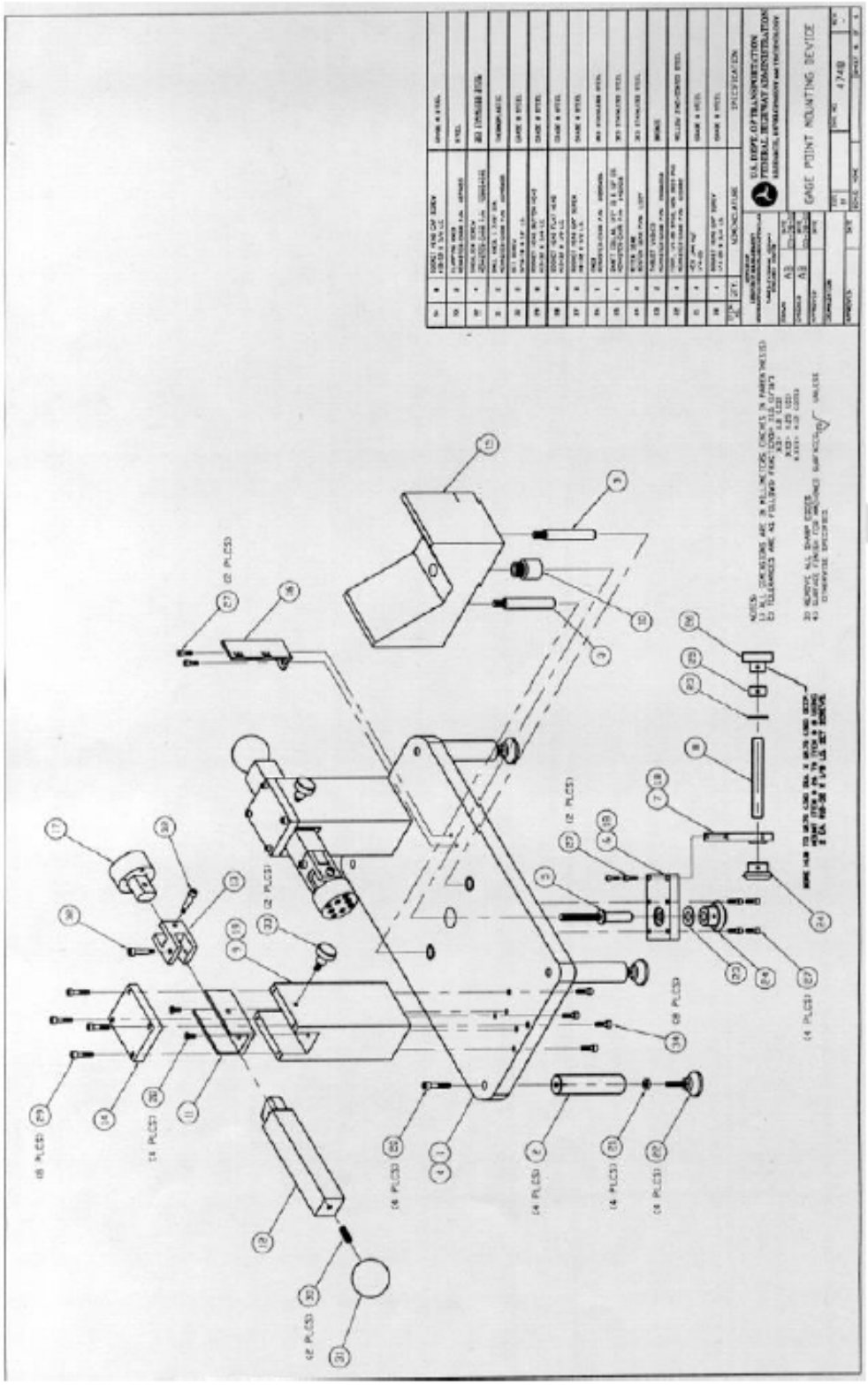

APPENDIX 3. Contact Point Template

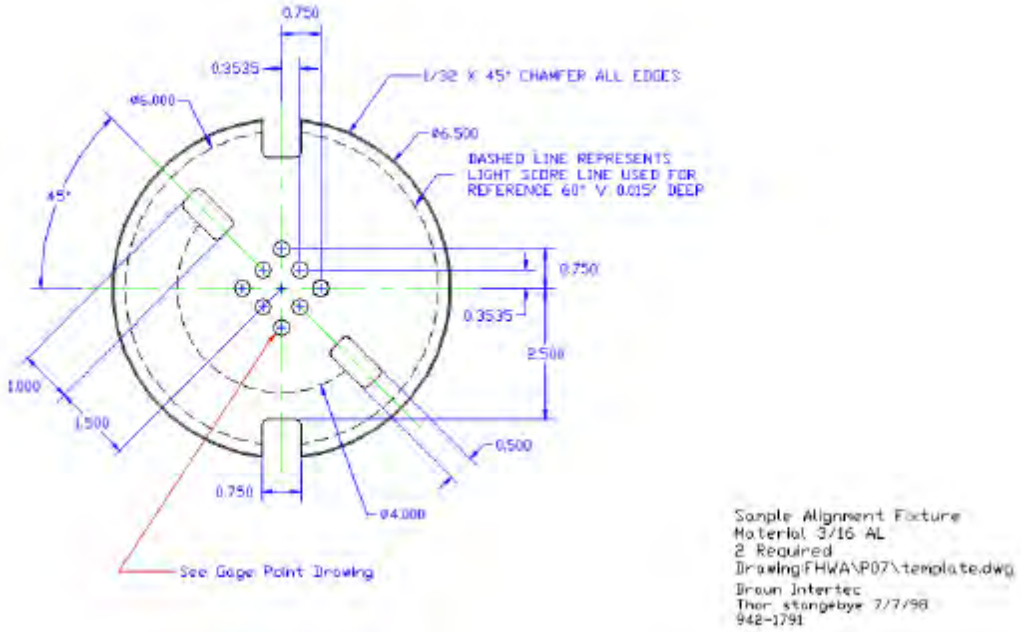

APPENDIX 4. Test Specimen with Attached Gage Points and Marked Contact Points