REINFORCING CULVERT END SECTIONS

Concrete Culvert Overview Flowchart
Structural Defects Flowchart (Concrete)
Bedding Deficiencies Flowchart (Concrete)
Hydraulic Capacity Flowchart (Concrete)

1. SUMMARY

End sections without adequate soil support can be reinstated by underpinning. Ballinger and Drake (1995) described concepts and methods for underpinning in Appendix B-20.

The following methods are suitable for reinforcing end sections of concrete culverts to prevent their drop off:

- Concrete pipe ties
- Steel reinforcing bars
- Pre-stressing steel

Concrete pipe ties can be used in new installations. Four different methods to attach concrete pipe ties are shown in Figure 1.

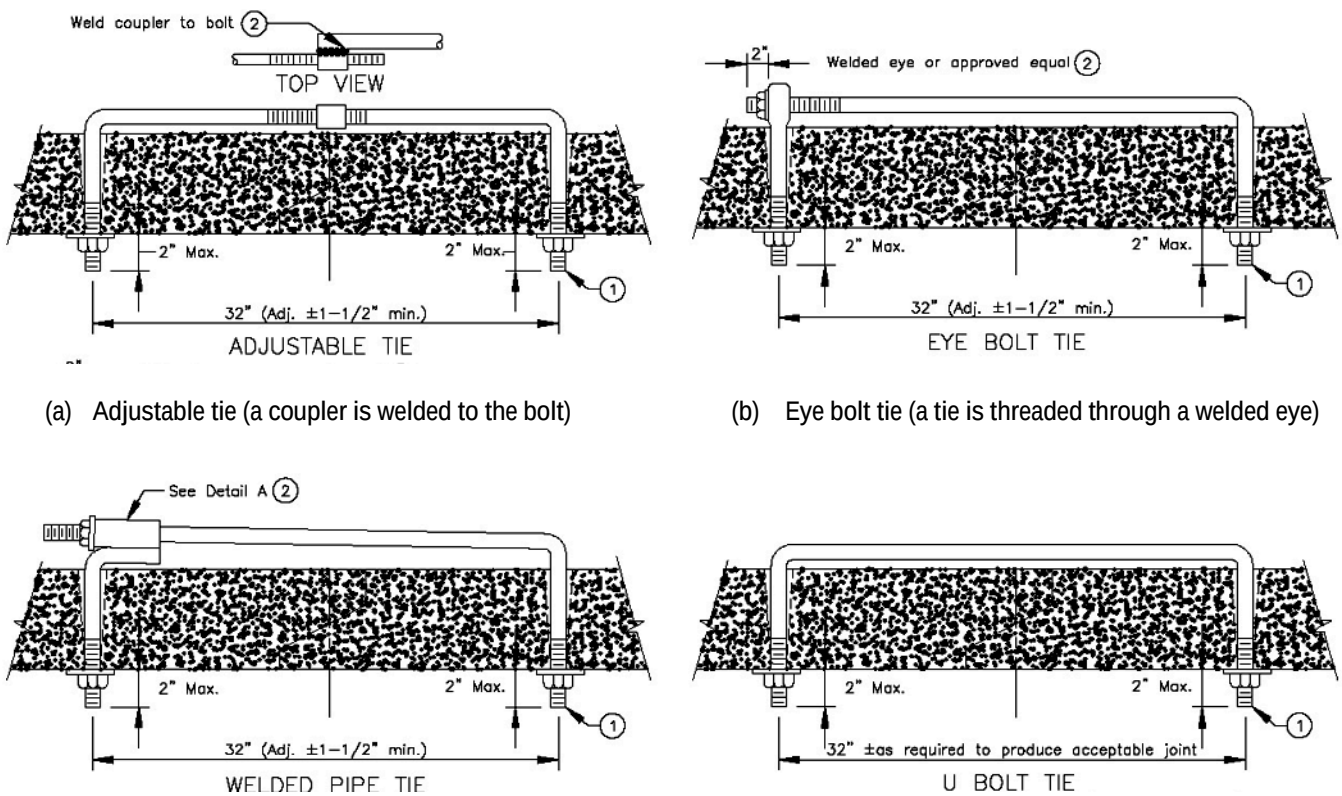

(a) Adjustable tie (a coupler is welded to the bolt)

(b) Eye bolt tie (a tie is threaded through a welded eye)

(c) Welded tie (two bolts are welded together)

(d) U-bolt tie

Figure 1. Four methods that can be used to attach concrete pipe ties in new culverts (MNDOT, 1985)

Steel reinforcing bars have U-shaped end sections that are installed into the holes pre-drilled through the concrete sections. The bars may be anchored with an epoxy adhesive. The method is applicable in man-entry culverts and is suitable for culverts where the embankment cannot be removed (Ballinger and Drake, 1995).

Ballinger and Drake (1995) introduced the possibility of pre-stressing the steel in the reinforced concrete culvert to keep the sections together and prevent them from separating. No case study has been identified. The pre-stressing would have to be done on the entire length of the culvert and not just on the end sections.

2. REFERENCES

Ballinger, C.A., and P.G. Drake, 1995. *Culvert Repair Practices Manual*, Vol. 1 & Vol. 2 (Appendices), FHWA-RD-95-089, May 1995, US Department of Transportation, Federal Highway Administration (FHWA), McLean, VA, 330p & 321p

Concrete Culvert Overview Flowchart

Structural Defects Flowchart (Concrete)

Bedding Deficiencies Flowchart (Concrete)

Hydraulic Capacity Flowchart (Concrete)