The National Academies of
SCIENCES · ENGINEERING · MEDICINE

TRANSPORTATION RESEARCH BOARD

Straight to Recording for All: Bridges as Philanthropy

Bridges in A Walking World – Building Bridges as Philanthropy

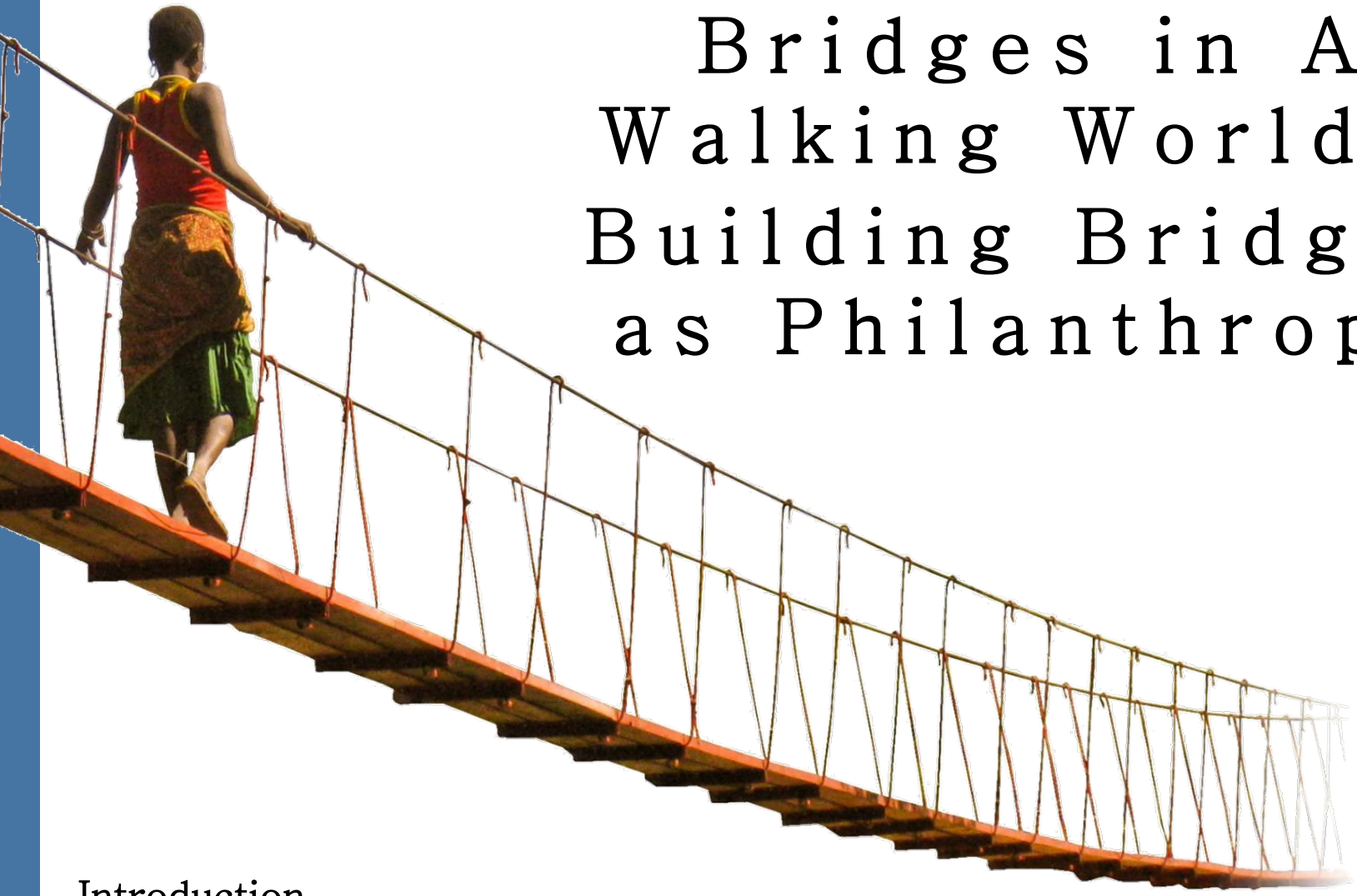

Introduction

Kelley Severns, PE

BRIDGING THE GAP AFRICA

BUILDING BRIDGES • TRANSFORMING LIVES

W A L K I N G W O R L D

W A L K I N G W O R L D

78% of Kenya's 44 million people live in a walking world

W A L K I N G W O R L D

Rivers prevent access to **EDUCATION, HEALTH CARE,** and **MARKETS**

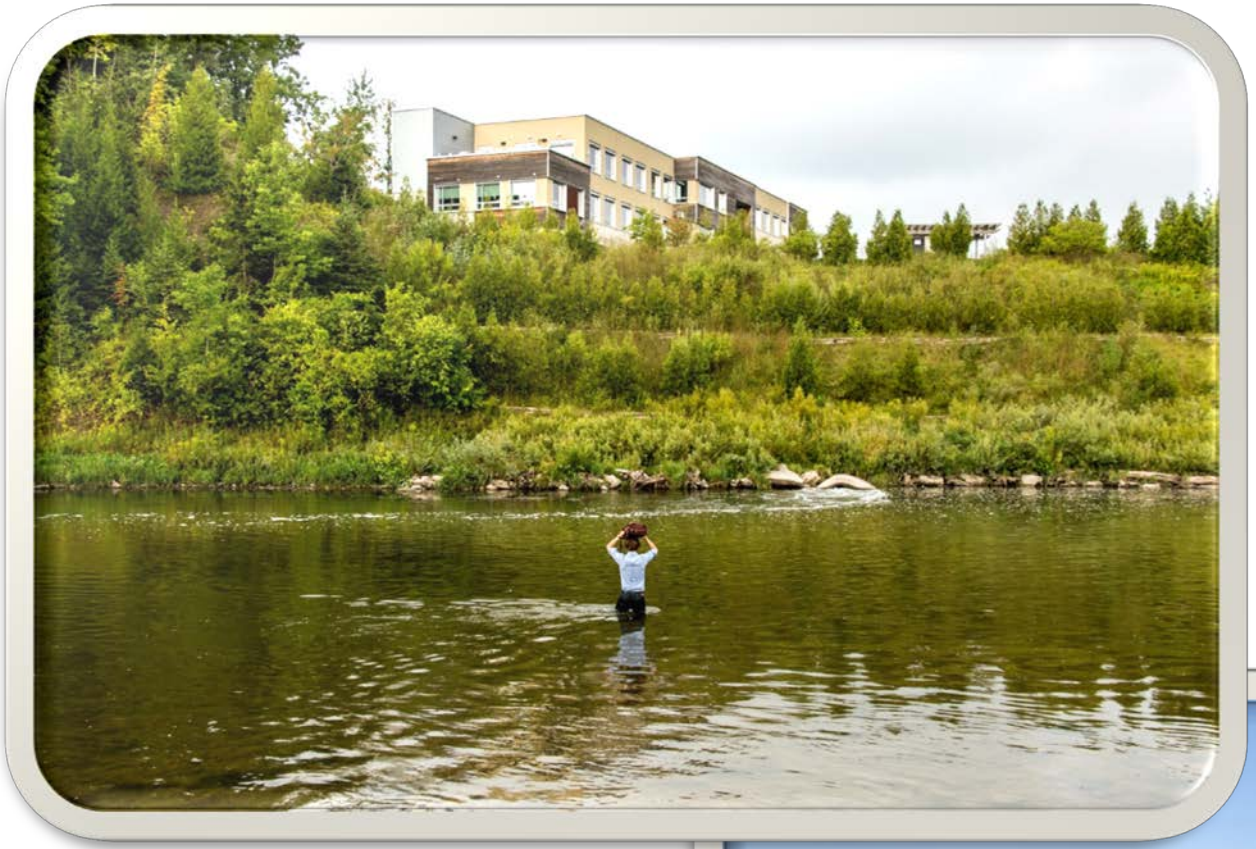

W A L K I N G W O R L D

A bridge **TRANSFORMS** a village

DESIGN AND CONSTRUCTION

5 PHASES:

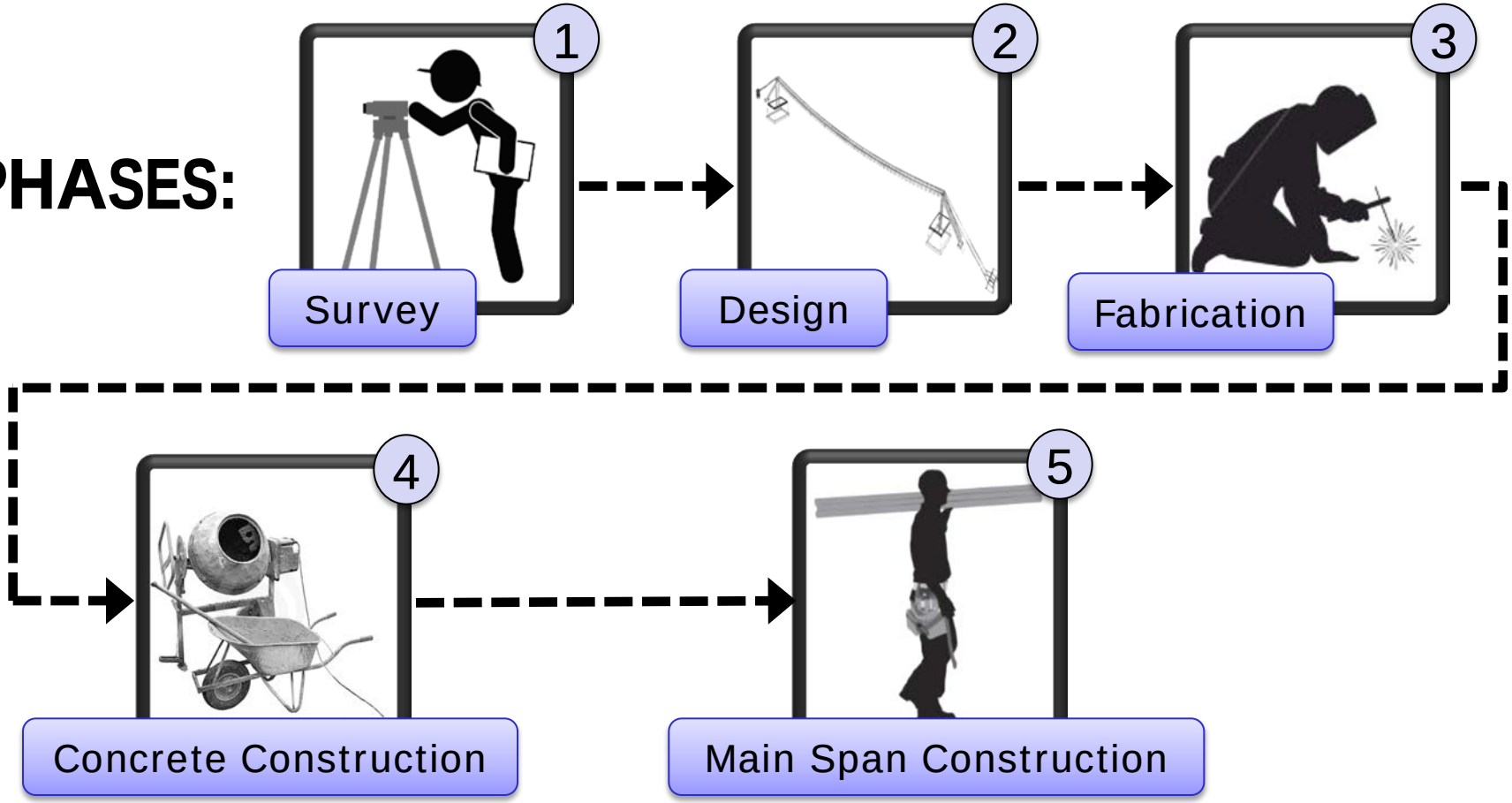

Questions?

Kelley.Severns@wsp.com

+1 859-433-9623

BRIDGING THE GAP AFRICA

BUILDING BRIDGES • TRANSFORMING LIVES

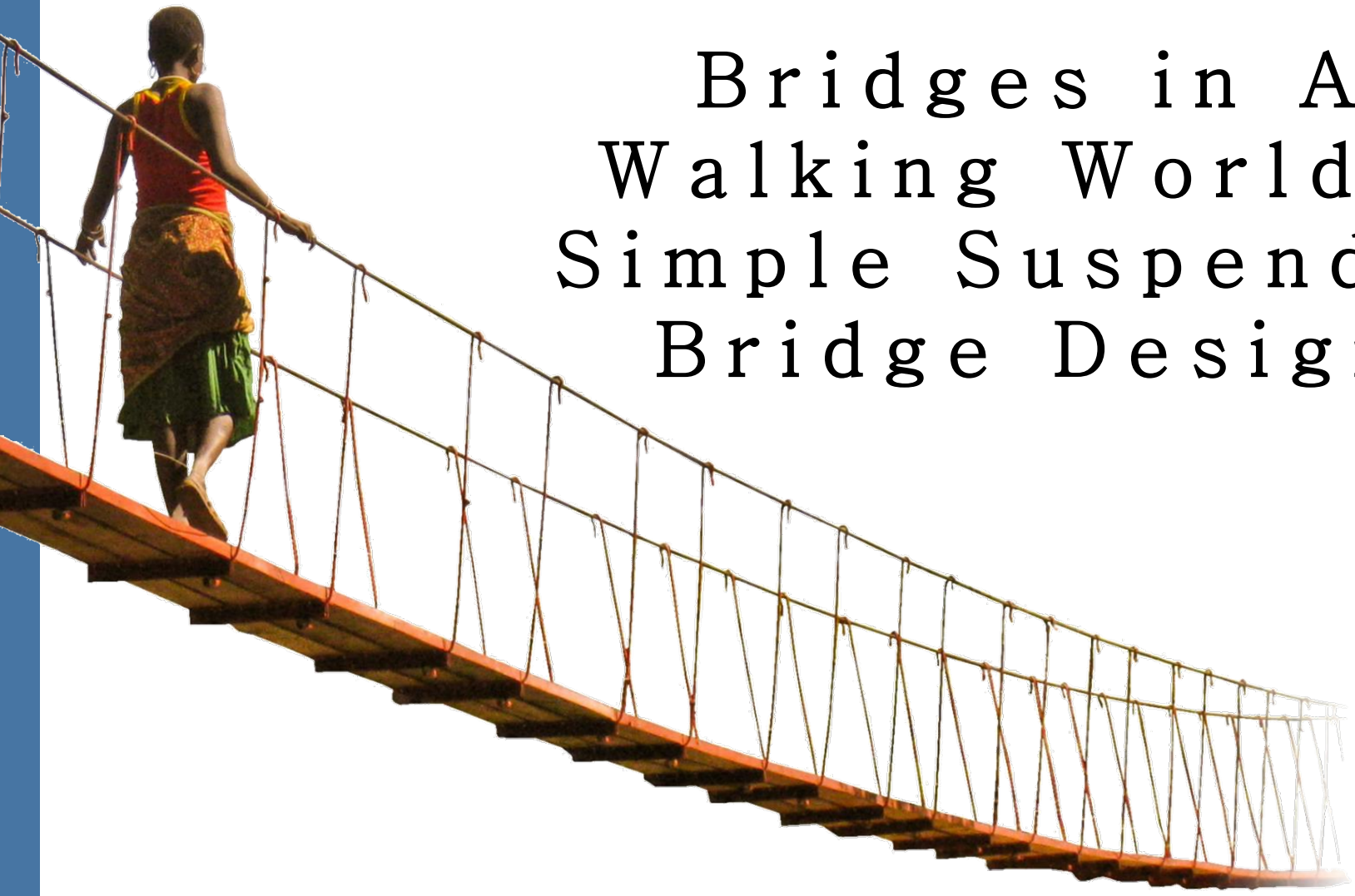

Bridges in A Walking World – Simple Suspended Bridge Design

Presented by: Nate Bloss, P.E.

ch2m

BRIDGING THE GAP AFRICA
BUILDING BRIDGES • TRANSFORMING LIVES

DESIGN AND CONSTRUCTION

5 PHASES:

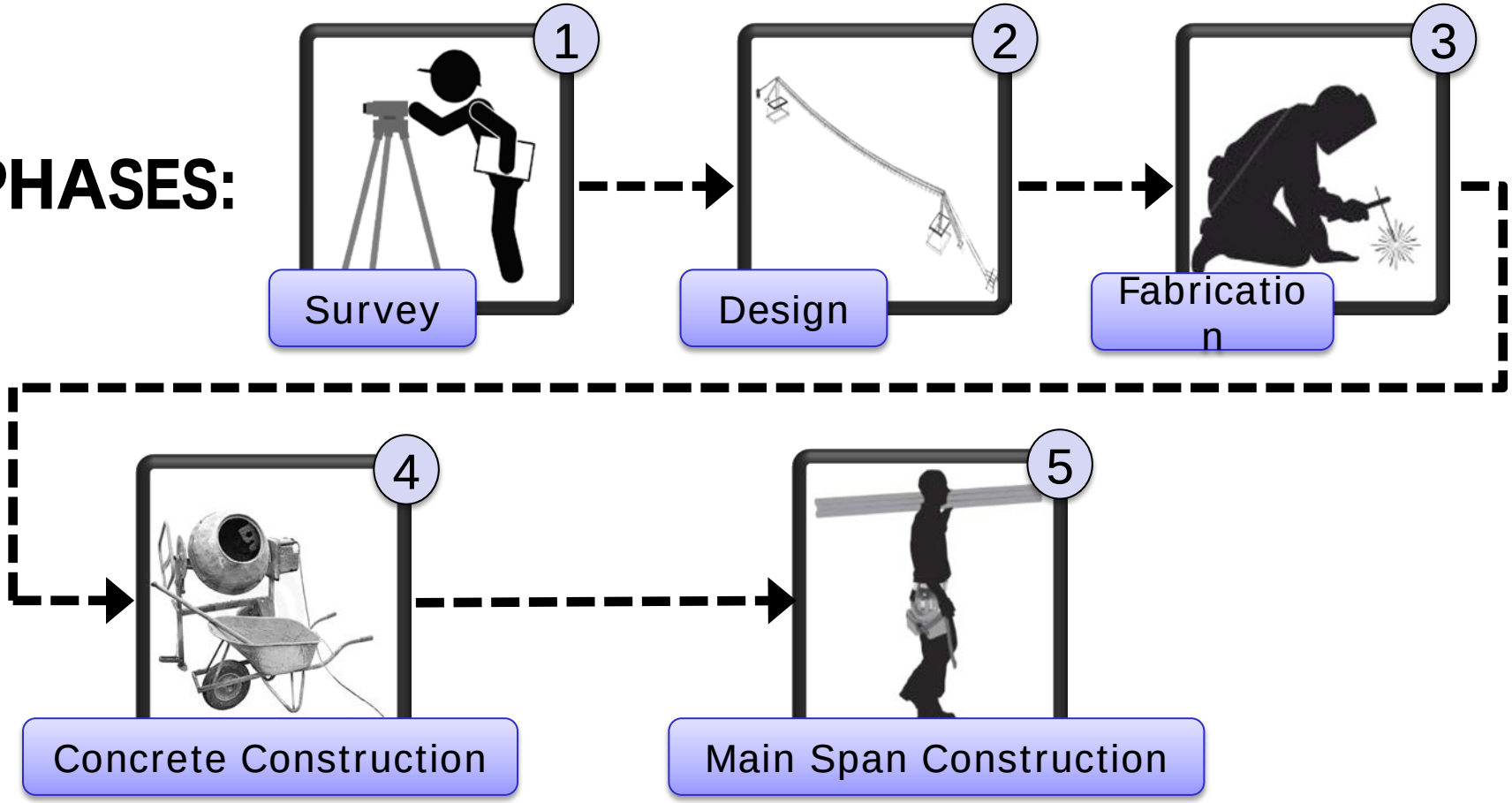

S U R V E Y

- SELECT A SITE
- SURVEY
- HIGH WATER
- SOIL SAMPLES
- COMMUNITY INFO

D E S I G N

OBJECTIVES

- **SIMPLE** PEDESTRIAN FOOTBRIDGE
- EASY TO TRANSPORT
- CAN BE CONSTRUCTED W/O HEAVY MACINARY
- REQUIRES **LITTLE MAINTENANCE**

- **OBJECTIVE**
- MATERIALS
- LAYOUT
- DESIGN

D E S I G N

BASIC MATERIALS:

- DONATED **WIRE ROPE** (A603, 5/8“ to 1¼” DIAMETER)
- BRITISH **STEEL** SECTIONS / REBAR (F_y = *40 TO 60 ksi*)
- 2.2 ksi **CONCRETE** (*1:2:4 MIX WITH ~3” SLUMP*)
- LOCAL, ROUGH CUT **TIMBER** (CYPRUS, BENDING STRENGTH ~15 ksi)

- OBJECTIVE
- **MATERIALS**
- LAYOUT
- DESIGN

D E S I G N

CONSIDERATIONS:

- SPAN AND SAG (L/25 TO L/35)
- DIFFERENCE IN TOWER HEIGHT (L/30)
- FREEBOARD (2 TO 5 METERS)
- SUSPENDED VS SUSPENSION (DEPENDS ON SITE TERRAIN)
- DECK WIDTH (DEPENDS ON TRAFFIC)

- OBJECTIVE
- MATERIALS
- **LAYOUT**
- DESIGN

Bridge Schematic (Not To Scale)

Backstay 1 Characteristics

Anchor Type:	Beam
Backstay Cable:	15.34 m
Cable Over Column:	0.15 m
Cable Exposed:	5.22 m
Cable Inside Anchor:	4.25 m
Cable for W.R. Grips:	0.72 m
Extra Cable:	5.00 m

Tower 1 Characteristics

Take-Off Slope (Span):	0.1735
Cable Tension (Span):	613.4 kN
Cable Tension (Anchor):	631 kN
Res. Vert. Cable Ten.:	286 kN
Res. Horz. Cable Ten.:	0 kN
Column Width (Long.):	152 mm
Cross Bracing:	Yes

Bridge Span Characteristics

Span:	50.00 m
Sag:	2.00 m
Tower Height Difference:	0.22 m
Low Tower:	2
Spanning Cable Length:	50.24 m
Cable Size:	28 mm
Total W. R. G.:	24
Number of Suspenders:	51
Decking Boards (wide):	6

Tower 2 Characteristics

Take-Off Slope (Span):	0.1646
Cable Tension (Span):	612.5 kN
Cable Tension (Anchor):	649 kN
Res. Vert. Cable Ten.:	337 kN
Res. Horz. Cable Ten.:	0 kN
Column Width (Long.):	152 mm
Cross Bracing:	Yes

Backstay 2 Characteristics

Anchor Type:	Beam
Backstay Cable:	13.35 m
Cable Over Column:	0.15 m
Cable Exposed:	3.22 m
Cable Inside Anchor:	4.25 m
Cable for W.R. Grips:	0.72 m
Extra Cabale:	5.00 m

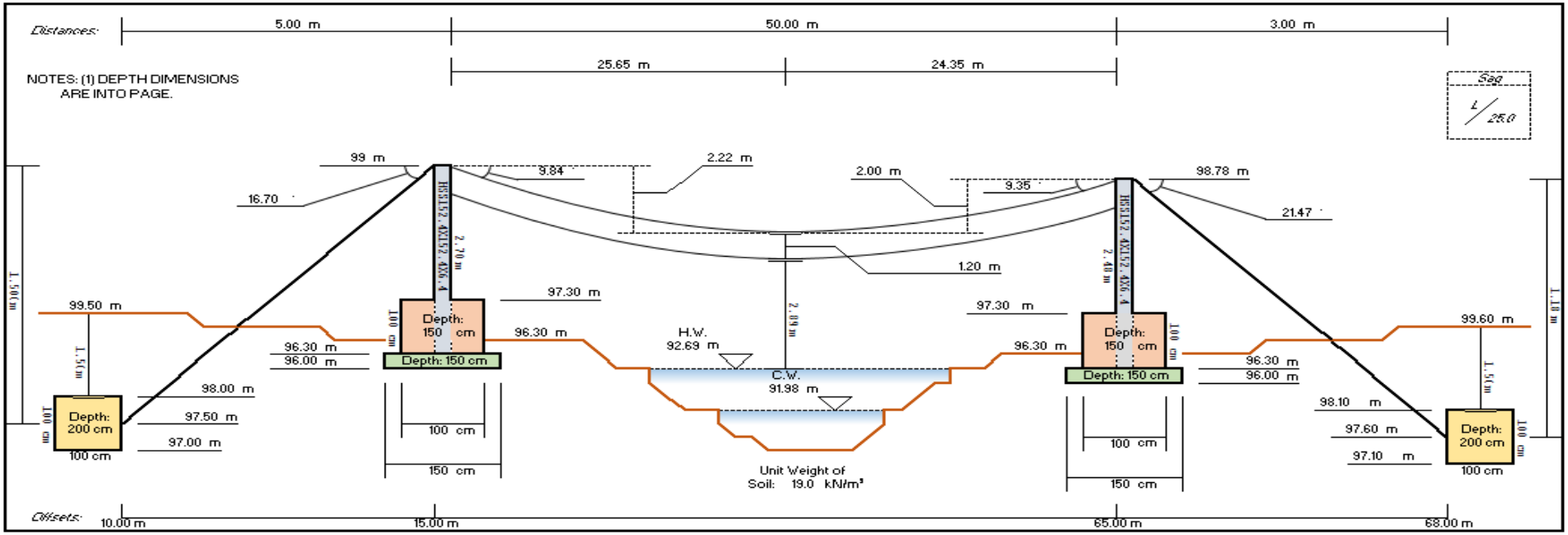

Cable Geometry Investigator:

Functions of Horizontal Position	
Horizontal Position (x):	**0.00 m**
Vertical Position (y), Given x :	0.00 m
Cable Length, Given x [$s(x)$]:	0.00 m
Slope of Cable, Given x :	0
Angle of Cable, Given x [$T(x)$]:	0.00 °
Tension in Cable, Given x [$T(x)$]:	604.40 kN
Vertical Cable Tension, Given x [$F_v(x)$]:	0.00 kN
Functions of Vertical Position	
Vertical Position (y):	**0.00 m**
Horizontal Position (x), Given y :	0.00 m
Tension in Cable, Given y [$T(y)$]:	604.40 kN
Functions of Distance Along Cable	
Distance Along Cable (s):	**10.00 m**
Angle of Cable, Given s [$\theta(s)$]:	0.07 °
Tension in Cable, Given s [$T(s)$]:	605.77 kN
Vertical Cable Tension, Given s [$F_v(s)$]:	40.68 kN

Total Cable Length

Total Cable Needed:	**157.85 m**
Spanning Cable Needed:	50.24 m
Spanning Cable, Tower 1 Side (s):	25.78 m
Spanning Cable, Tower 2 Side (s):	24.46 m
Side Cable Needed:	28.69 m

Cable Tension Solver

Solver Results	
Horizontal Tension in Cable (F_x):	604.4 kN
Solver	

$$L = \frac{F_x}{\omega}\left[\cosh^{-1}\left(\frac{\omega f_L}{F_x}+1\right)+\cosh^{-1}\left(\frac{\omega f_R}{F_x}+1\right)\right]$$

Equation Left Side:	50.0000 m
Equation Right Side:	50.0002 m
Solver Delta:	0.0002 m

Loading

Live Loads	
Design Live Load:	391 kg/sm
Wind Loads	
Wind Velocity:	40 m/s
Wind Loading Recurrence Interval:	50 Years
Approximate Height Between Water and Bridge:	< 5 m
Wind Uplift Load:	98 kg/sm
Vessel Loads	
Vessel Weight:	5000 kg
Slow Down Distance:	0.3 m
Velocity of Water:	2.50 m/s
Resulting Loads	
Total Unit Weight on Cable:	4.07 kN/m
Maximum Tension in Cable:	649 kN

Update Catenary Geometry

D E S I G N

COMPONENTS

A. DECKING

B. HANGERS

C. CABLES

D. STEEL TOWERS

E. STABILIZATION BLOCK

F. FOOTING

G. ANCHOR (DRUM VS BEAM)

H. WIRE ROPE GRIPS

- OBJECTIVE
- MATERIALS
- LAYOUT
- **DESIGN**

F A B R I C A T I O N

F A B R I C A T I O N

CONSTRUCTION

CONSTRUCTION

CONSTRUCTION

- **LAYOUT BRIDGE**
- **EXCAVATE**
- **LAYOUT CABLE**
- POUR ANCHORS
- POUR FOOTINGS
- ERECT TOWERS

CONSTRUCTION

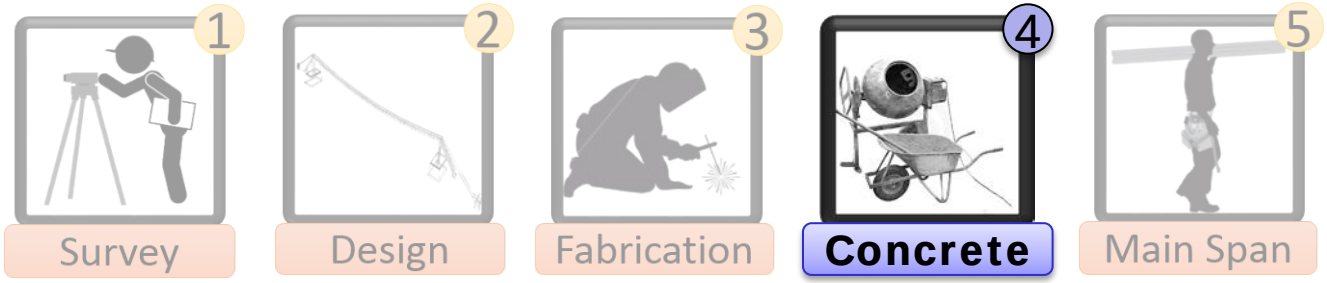

- LAYOUT BRIDGE
- EXCAVATE
- LAYOUT CABLE
- **POUR ANCHORS**
- POUR FOOTINGS
- ERECT TOWERS

CONSTRUCTION

- LAYOUT BRIDGE
- EXCAVATE
- LAYOUT CABLE
- POUR ANCHORS
- **POUR FOOTINGS**
- **ERECT TOWERS**

CONSTRUCTION

- **PAINT STEEL**
- **APPROACHES**
- **SET SAG**
- LAUNCH DECK
- FENCING
- BACKFILL

CONSTRUCTION

- PAINT STEEL
- APPROACHES
- SET SAG
- **LAUNCH DECK**
- **FENCING**
- **BACKFILL**

FINISHED BRIDGE

FINISHED BRIDGE

Nate.Bloss@ch2m.com

ch2m

BRIDGING THE GAP AFRICA
BUILDING BRIDGES • TRANSFORMING LIVES

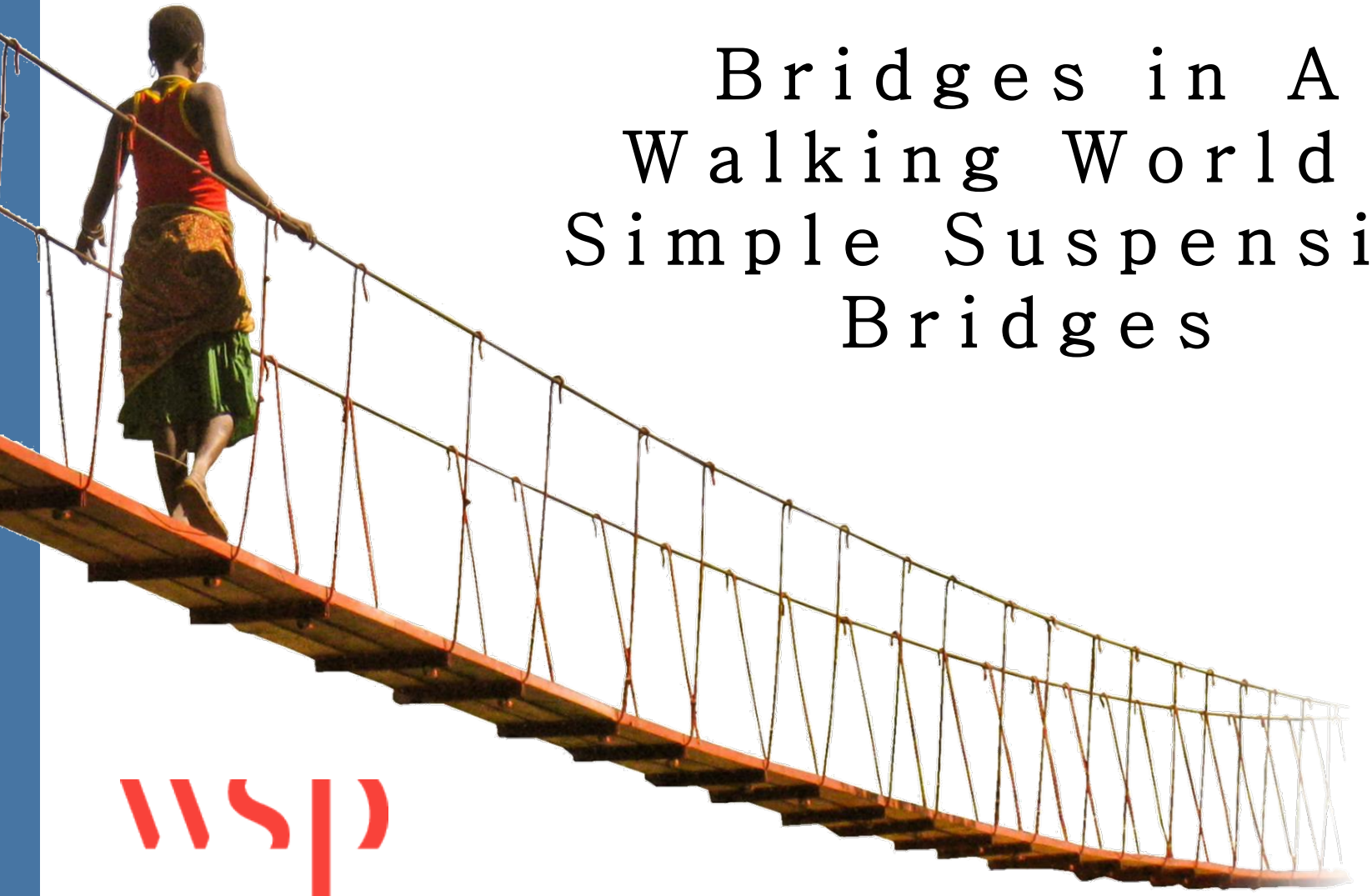

Bridges in A Walking World – Simple Suspension Bridges

Presented by: Matthew Bowser, P.Eng.
Contact: Matthew.Bowser@wsp.com

BRIDGING THE GAP AFRICA
BUILDING BRIDGES • TRANSFORMING LIVES

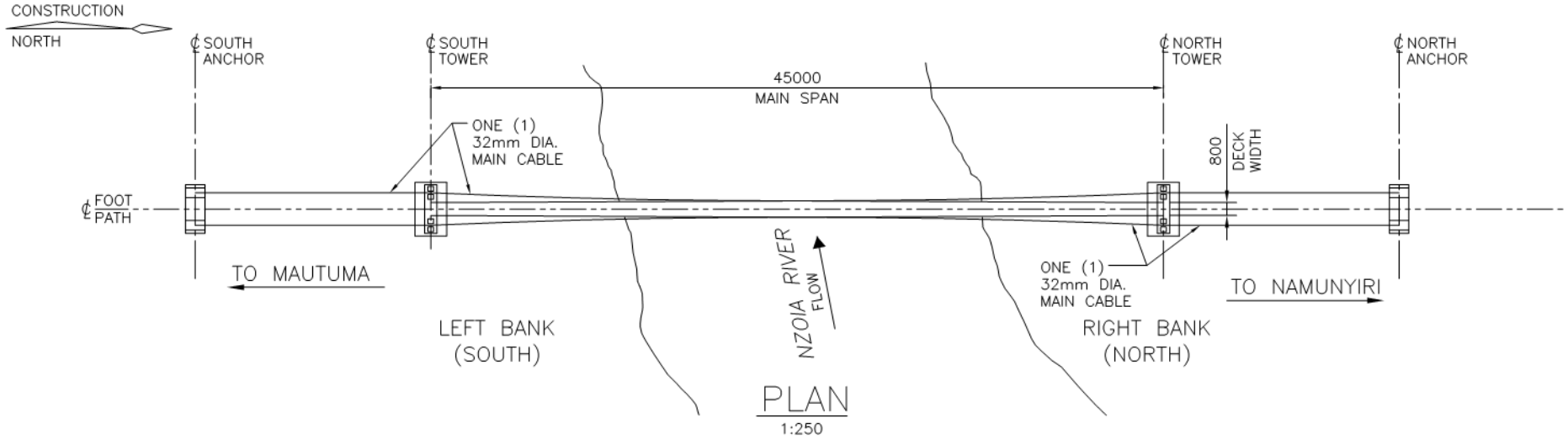

PLAN
1:250

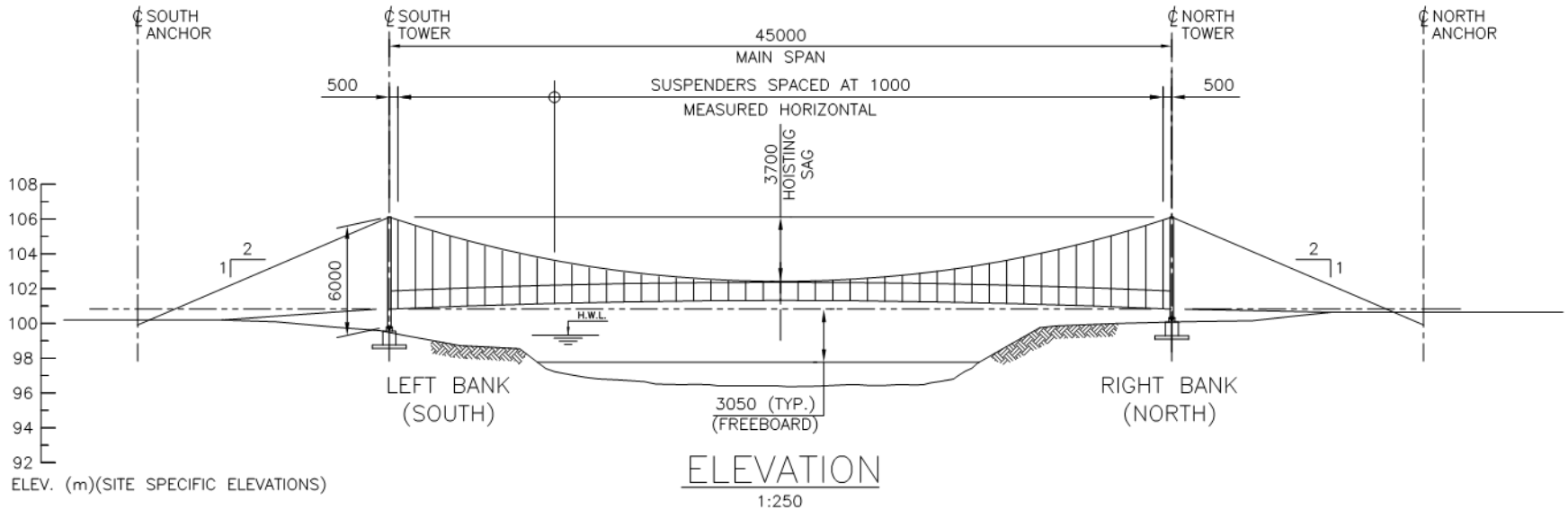

ELEVATION
1:250


390

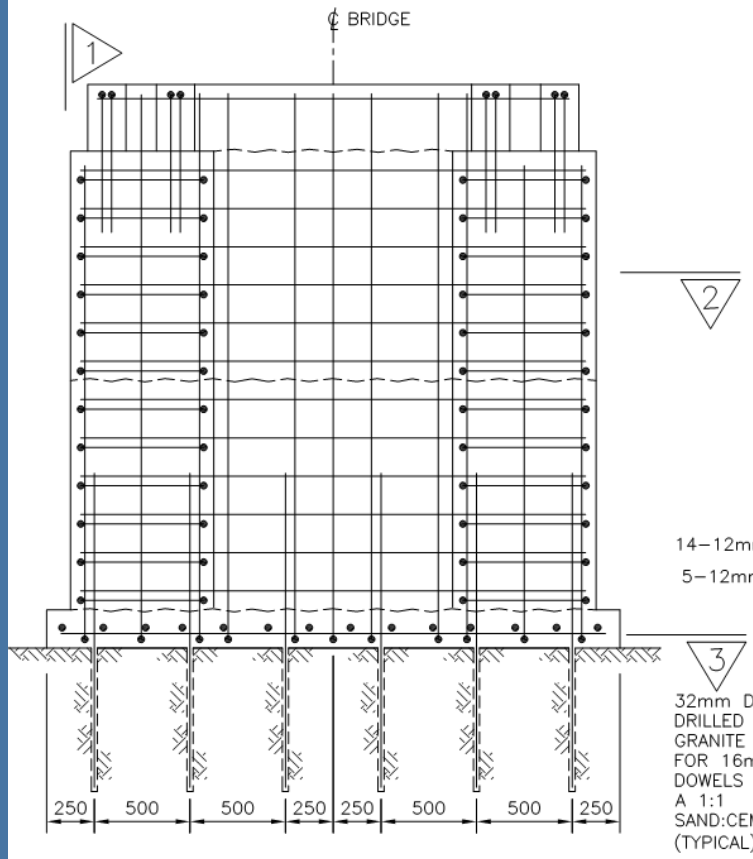

ELEVATION – TOWER FOUNDATION

1 : 25

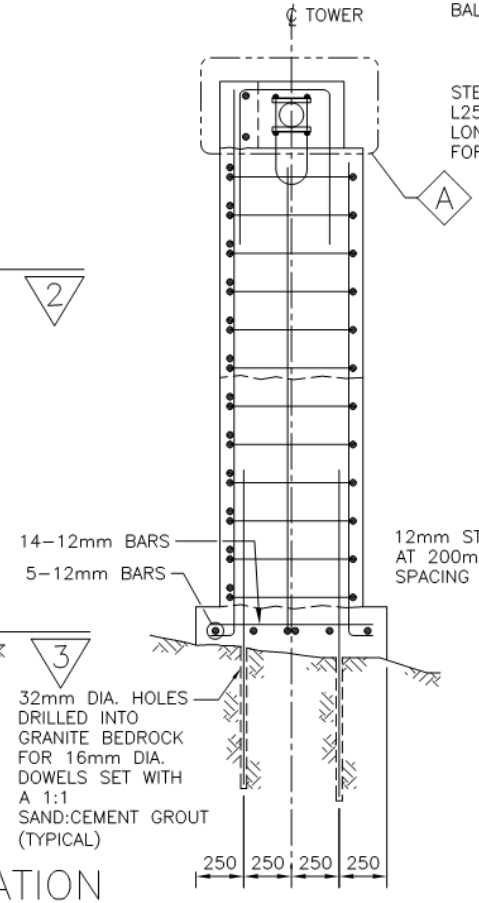

1

1 : 25

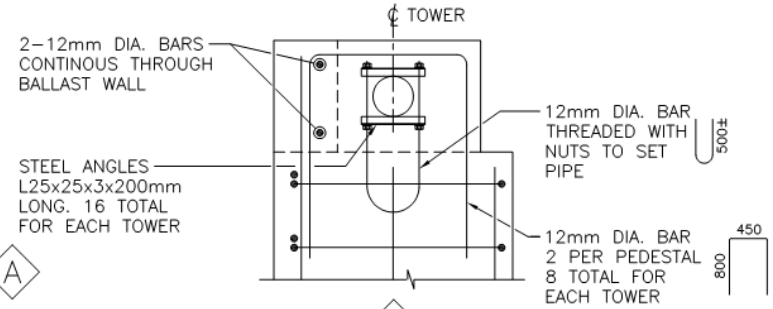

A

1:15

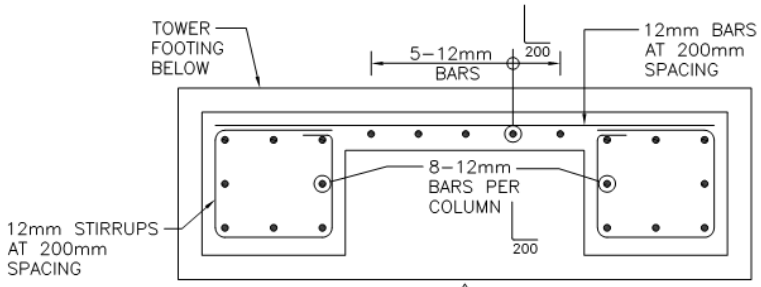

2

1 : 25

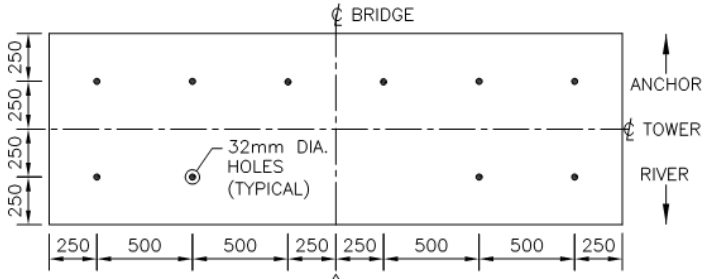

3

1 : 25

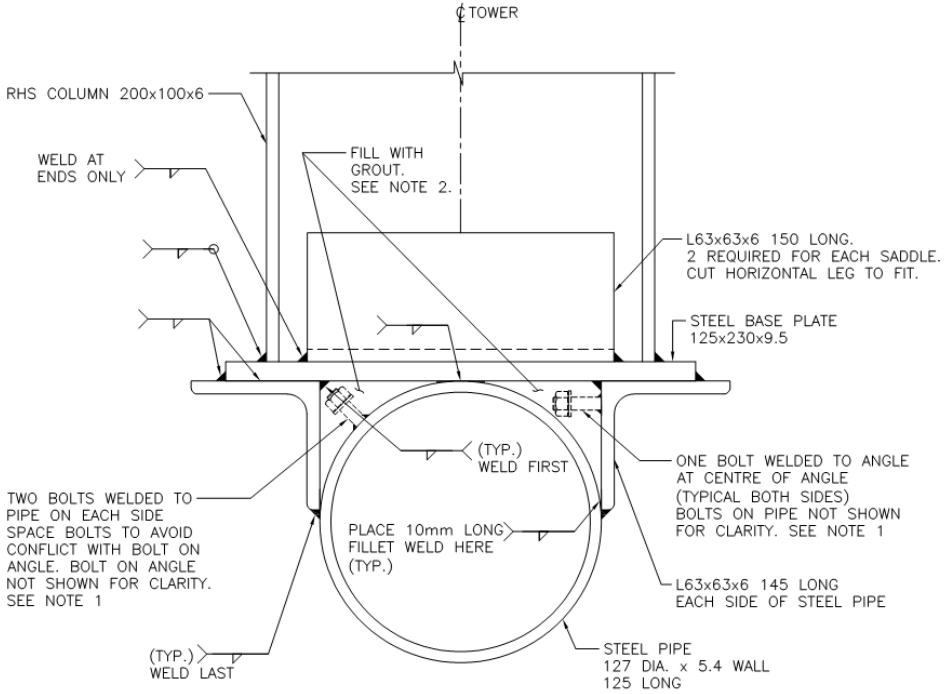

ELEVATION–TOWER BASE CONNECTION

1 : 2

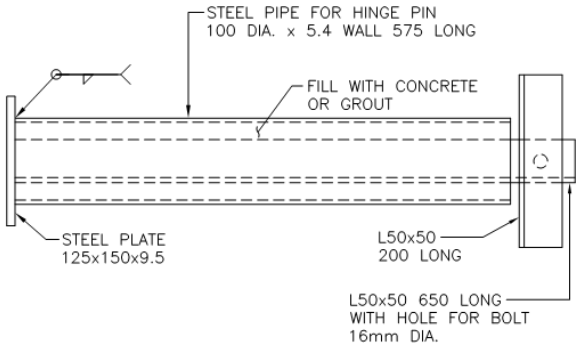

TOWER HINGE PIN

1 : 5

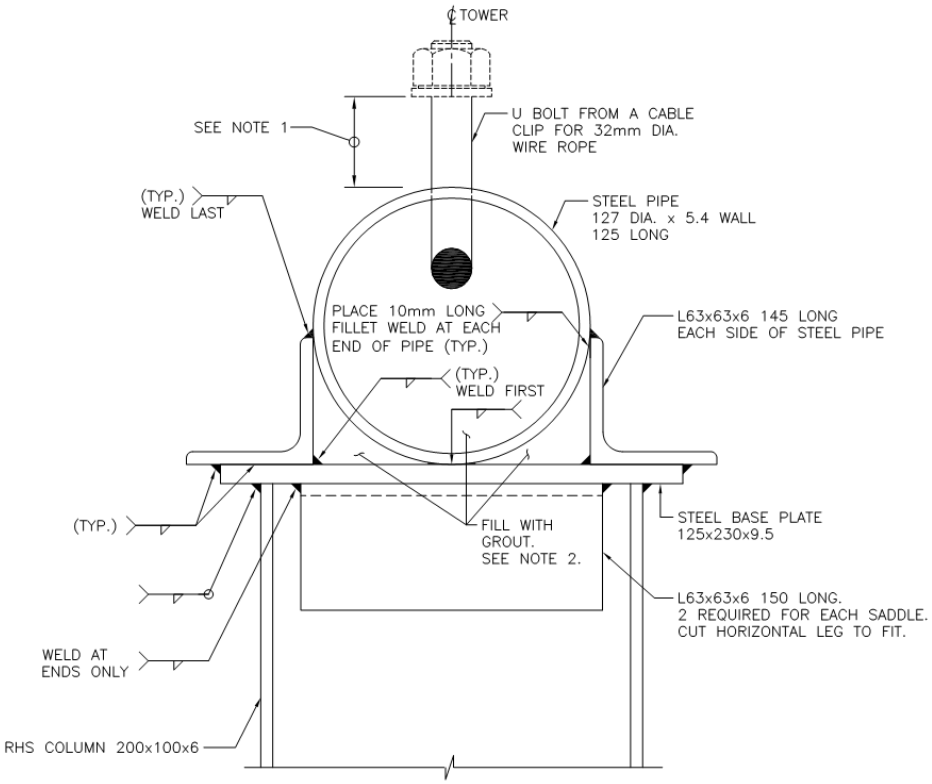

ELEVATION–TOWER SADDLE

1 : 2

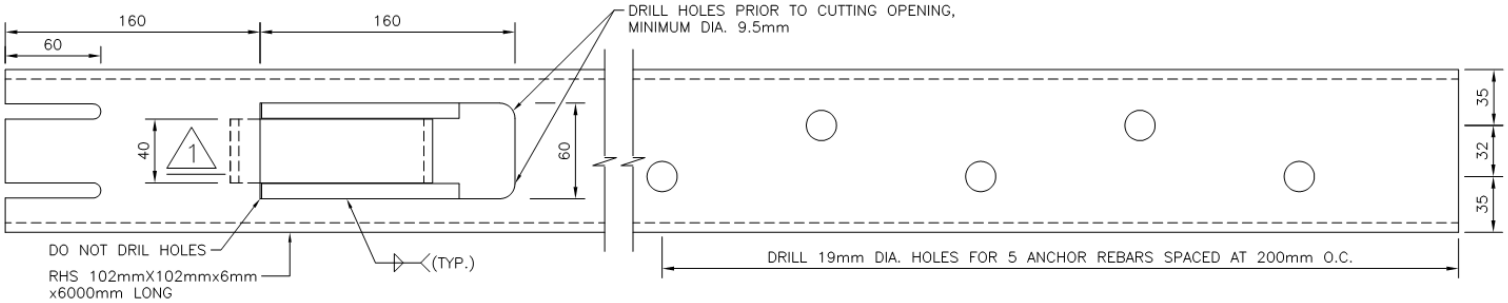

PLAN VIEW – ANCHOR CONNECTION

1 : 2.5

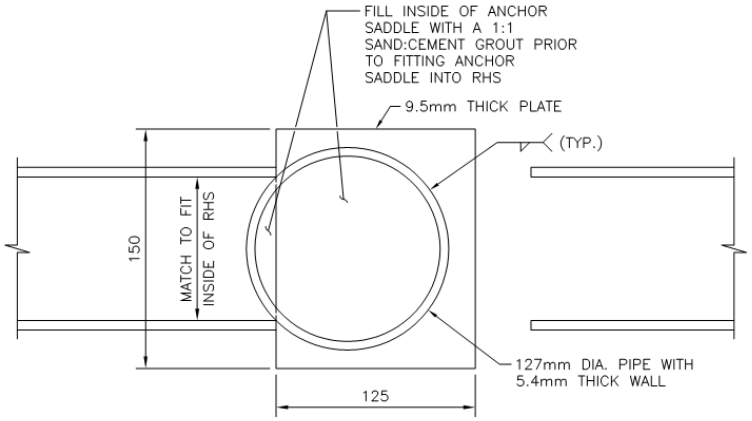

ANCHOR SADDLE

1 : 2.5

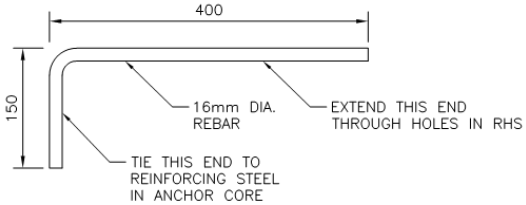

ANCHOR REBAR

1 : 5

(5 REQUIRED IN EACH RHS)

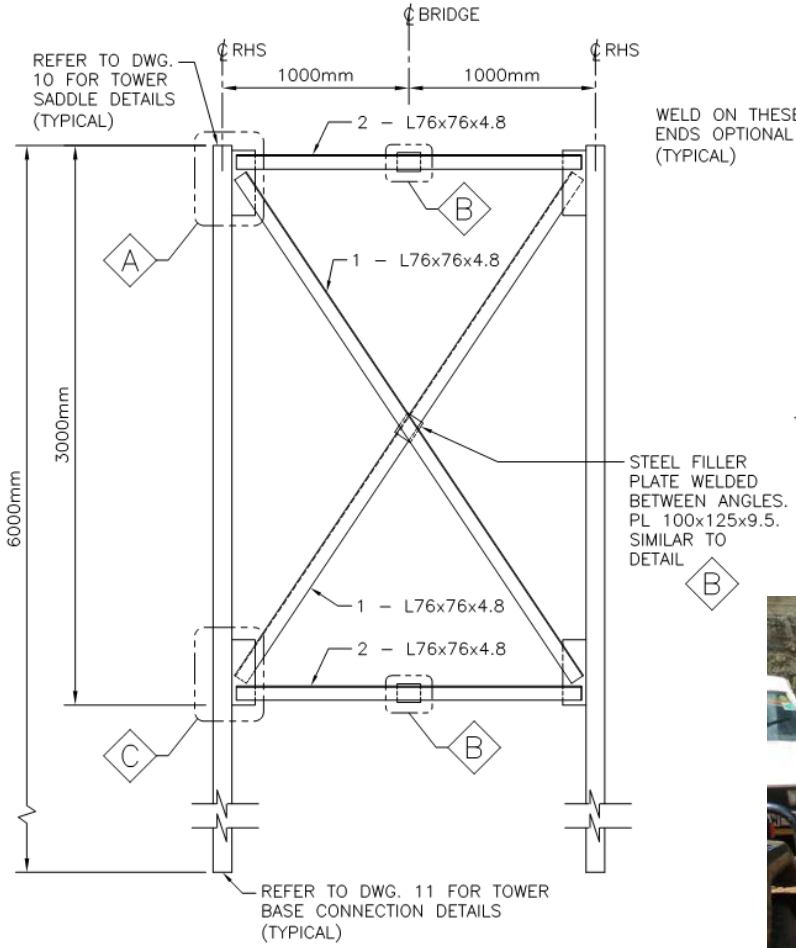

ELEVATION – TOWER DETAILS

1 : 25

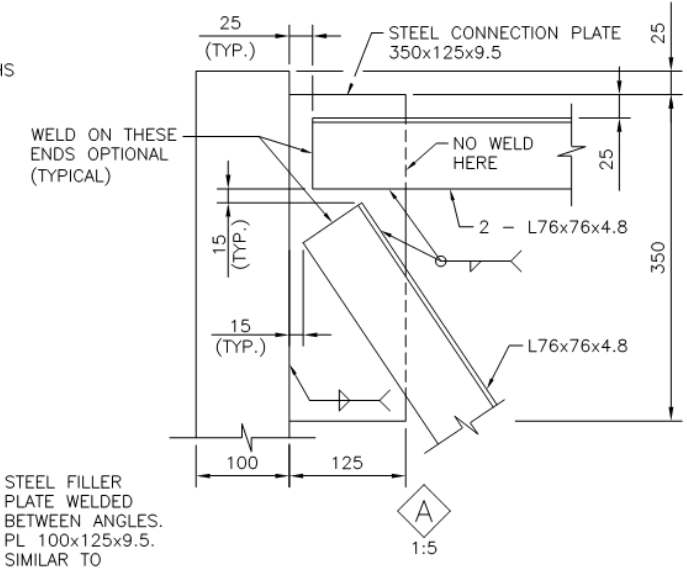

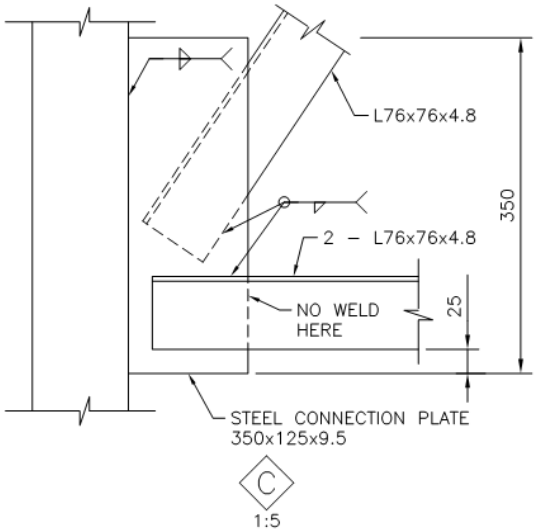

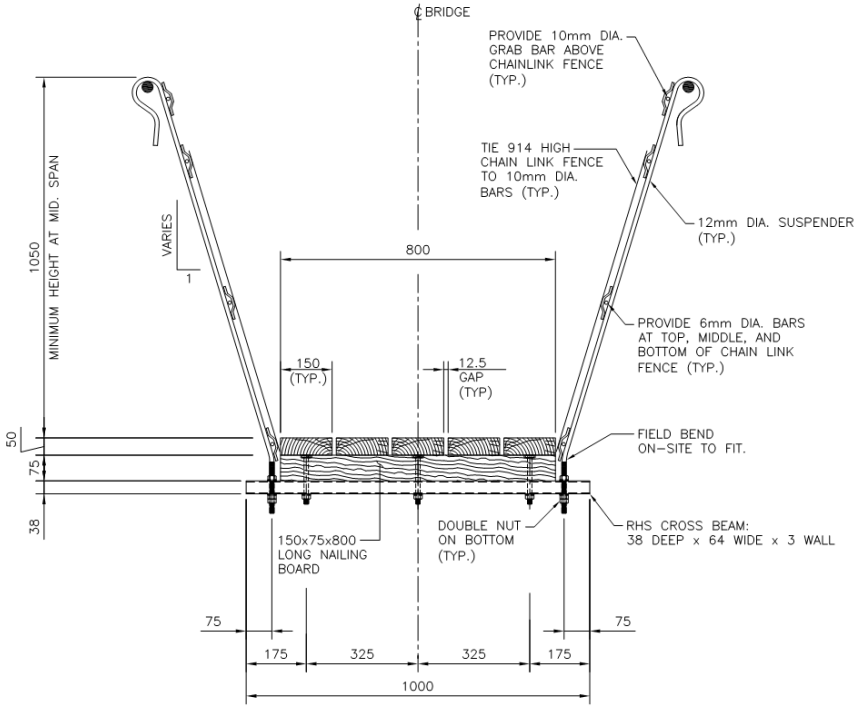
℄ BRIDGE
PROVIDE 10mm DIA. GRAB BAR ABOVE CHAINLINK FENCE (TYP.)
TIE 914 HIGH CHAIN LINK FENCE TO 10mm DIA. BARS (TYP.)
12mm DIA. SUSPENDER (TYP.)
PROVIDE 6mm DIA. BARS AT TOP, MIDDLE, AND BOTTOM OF CHAIN LINK FENCE (TYP.)
FIELD BEND ON-SITE TO FIT.
RHS CROSS BEAM: 38 DEEP x 64 WIDE x 3 WALL
DOUBLE NUT ON BOTTOM (TYP.)
150x75x800 LONG NAILING BOARD
1050
MINIMUM HEIGHT AT MID. SPAN
VARIES
1
800
150 (TYP.)
12.5 GAP (TYP)
50
75
38
75
175
325
325
175
75
1000

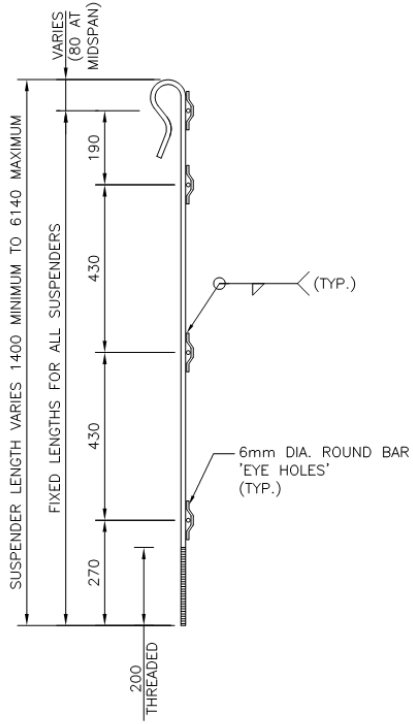

SUSPENDER DETAILS
1:10

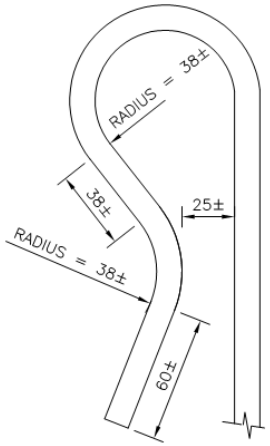

HOOK DETAILS
1:2

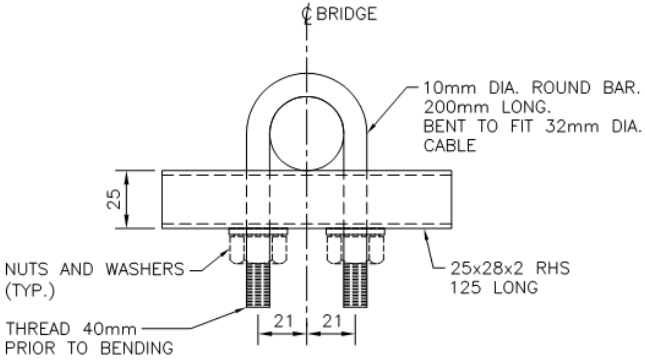

SUSPENDER STOPPER
1:2
(46 REQUIRED)

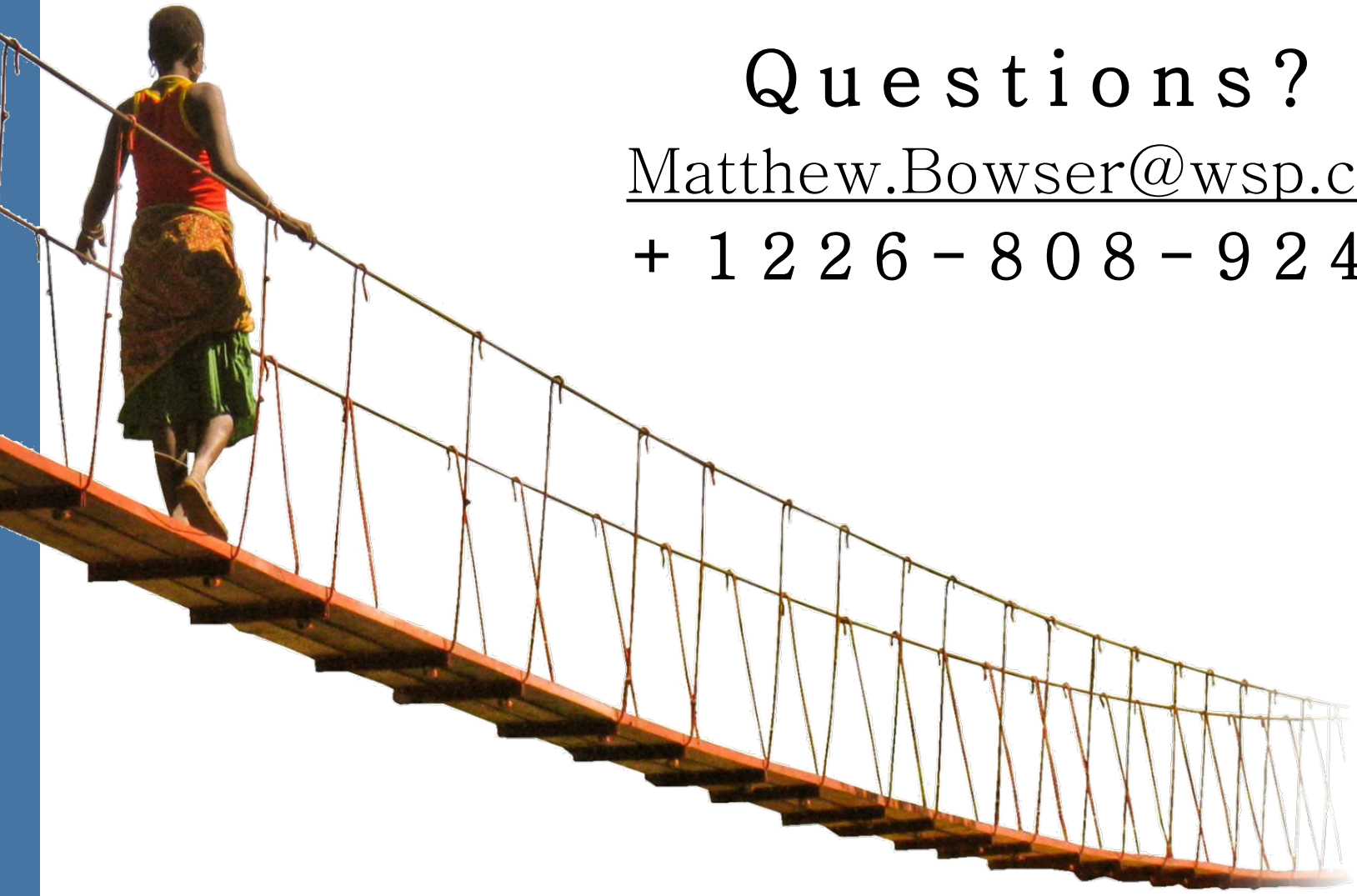

Questions?

Matthew.Bowser@wsp.com
+ 1 2 2 6 - 8 0 8 - 9 2 4 1

BRIDGING THE GAP AFRICA
BUILDING BRIDGES • TRANSFORMING LIVES